LE310Q1

Hardware Design Guide

1VV0302051 Rev.2
2026-03-27
Released
Public

Technical Documentation

Contents

1 Applicability Table 5
2 Introduction 6
2.1 Scope 6
2.2 Audience 6
2.3 Contact Information, Support 6
2.4 Conventions 7
2.5 Terms and Conditions 7
2.6 Disclaimer 7
3 General Product Description 8
3.1 Overview 8
3.2 Product Variants and Frequency Bands 8
3.3 Target Market 8
3.4 Main Features 8
3.5 Mechanical Specifications 9
3.5.1 Dimensions 9
3.5.2 Weight 9
3.6 Temperature Range 9
4 Pins Allocation 10
4.1 Pin-out 10
4.2 LGA Pads Layout 14
4.3 Pin Characteristics by Power Domains 15
5 Power Supply 17
5.1 Power Supply Requirements 17
5.2 Power Consumption 18
5.2.1 LE310Q1-WW Connected Mode 19
5.2.2 LE310Q1-SN Connected Mode 20
5.2.3 LE310Q1-EU Connected Mode 21
5.3 General Design Rule 21
5.3.1 Electrical Design Guidelines 21
5.3.1.1 + 5V Input Source Power Supply – Design Guidelines 22
5.3.1.2 + 12V Input Source Power Supply – Design Guidelines 22
5.3.1.3 Battery Source Power Supply – Design Guidelines 23
5.3.2 Thermal Design Guidelines 24
5.3.3 Power Supply PCB Layout Guidelines 25
5.4 RTC Supply 25
5.5 PWRMON Power-on Monitor 26
5.6 VDD_IO 27
6 Digital Section 28
6.1 Logic Levels 28
6.1.1 1.8V Standard GPIOs 28
6.1.2 SIM Voltage Pads - Absolute Maximum Ratings 28
6.2 Power On 28
6.2.1 Module Power On 28
6.2.2 Wake-up 32
6.3 Power Off 32

6.3.1 Power Off by Software Command 32
6.3.2 Power Off by ON_OFF# pad 33
6.3.3 Fast Shutdown 34
6.3.3.1 Fast Shutdown by Hardware 34
6.3.3.2 Fast Shutdown by Software 36
6.3.4 Emergency Reset 36
6.4 Communication Ports 37
6.4.1 SPI 37
6.4.2 Serial Ports 37
6.4.2.1 Asynchronous Serial Port (USIF0) 38
6.4.2.2 Auxiliary Serial Port 39
6.5 General Purpose I/O 39
6.5.1 Using a GPIO as an INPUT 40
6.5.2 Using a GPIO as an OUTPUT 40
6.6 ADC Converter 40
6.6.1 Using ADC Converter 40
6.7 SIM Card Interface 40
6.7.1 SIM Schematic Example 41
6.8 Forced USB Boot 42
7 RF Section 43
7.1 TX Output Power 43
7.1.1 LE310Q1-EU, LE310Q1-SN, and LE310Q1-WW 43
7.2 RX Sensitivity 43
7.2.1 LE310Q1-WW RX sensitivity 43
7.2.2 LE310Q1-SN RX sensitivity 44
7.2.3 LE310Q1-EU RX sensitivity 44
7.3 Antenna Requirements 45
7.3.1 PCB Design Guidelines 45
7.4 Antenna Tuner 46
8 Mechanical Design 47
8.1 Drawing 47
8.1.1 LE310Q1-EU, LE310Q1-SN, and LE310Q1-WW 47
9 Application PCB Design 48
9.1 Recommended Footprint for the Application 48
9.1.1 LE310Q1-EU, LE310Q1-SN, and LE310Q1-WW 48
9.2 Recommendations for LE310Q1-EU, LE310Q1-SN, and LE310Q1-WW 50
9.3 PCB Pad Design 51
9.4 Recommendations for PCB Pad Dimensions 51
9.5 Stencil 52
9.6 Solder Paste 52
9.7 Solder Reflow 52
10 Packaging 54
10.1 Tray 54
10.1.1 LE310Q1-EU, LE310Q1-SN, and LE310Q1-WW 54
10.2 Reel 56
10.2.1 LE310Q1-EU, LE310Q1-SN, and LE310Q1-WW 56
10.3 Moisture Sensitivity 57
11 Conformity Assessment Issues 58

11.1 Approvals Summary 58
11.2 EMEA Approvals 58
11.2.1 EU RED 58
11.2.1.1 EU Declaration of Conformity 58
11.2.1.2 RED Antennas 59
11.2.2 UK UKCA 59
11.2.2.1 UKCA Declaration of Conformity 59
11.2.2.2 RED/UKCA Antennas 60
11.3 Americas Approvals 60
11.3.1 USA FCC 60
11.3.1.1 FCC Certificates 60
11.3.1.2 Applicable FCC Rules 61
11.3.1.3 FCC Regulatory Notices 61
11.3.1.4 FCC Antenna Info 63
11.3.1.5 FCC Labelling Requirements for the Host Device 64
11.3.2 Canada ISED 64
11.3.2.1 ISED Database 65
11.3.2.2 ISED Regulatory Notices 65
11.3.2.3 ISED Antenna Info / *Informations sur l'antenne d'ISDE* 66
11.3.2.4 Voir le chapitre 7 sur l'antenne - *Directives de ligne PCB* 68
11.3.2.5 ISED Label and compliance information / *ISDE Étiquette et informations de conformité* 68
11.4 APAC Approvals 69
11.4.1 Australian RCM 69
11.4.1.1 RCM Regulatory Notices 69
12 Acronyms and Abbreviations **70**
13 Related Documents **71**
14 Document History **72**

1 Applicability Table

Table 1: Applicability Table

Products
LE310Q1-EU
LE310Q1-SN
LE310Q1-WW

2 Introduction

2.1 Scope

This document introduces the Telit Cinterion LE310Q1 module and defines possible and/or recommended hardware implementations for the development of a product based on this module. All the features and solutions described in this document apply to all LE310Q1 variants listed in the applicability table unless explicitly specified otherwise.

This document cannot include every hardware solution or every product that can be designed. Where the suggested hardware configurations are not to be considered mandatory, the information provided should be used as a guide and starting point for the proper development of the product with the Telit Cinterion module.

2.2 Audience

This document is intended for system integrators that are using the Telit Cinterion LE310Q1 module in their products.

2.3 Contact Information, Support

For technical support and general questions, e-mail:

- TS-EMEA@telit.com
- TS-AMERICAS@telit.com
- TS-APAC@telit.com
- TS-SRD@telit.com
- TS-ONEEDGE@telit.com

Alternatively, use: https://www.telit.com/contact-us/

For Product information and technical documents, visit: https://www.telit.com

2.4 Conventions

Note:	Provide advice and suggestions that may be useful when integrating the module.
Danger:	This information MUST be followed, or catastrophic equipment failure or personal injury may occur.
Warning:	Alerts the user on important steps about the module integration.

All dates are in ISO 8601 format, that is YYYY-MM-DD.

2.5 Terms and Conditions

Refer to https://www.telit.com/terms-conditions/.

2.6 Disclaimer

THE MATERIAL IN THIS DOCUMENT IS FOR INFORMATIONAL PURPOSES ONLY. TELIT CINTERION RESERVES THE RIGHT TO MAKE CHANGES TO THE PRODUCTS DESCRIBED HEREIN. THE SPECIFICATIONS IN THIS DOCUMENT ARE SUBJECT TO CHANGE AT THE DISCRETION OF TELIT CINTERION WITHOUT PRIOR NOTICE. THIS DOCUMENT IS PROVIDED ON “AS IS” BASIS ONLY AND MAY CONTAIN DEFICIENCIES OR INADEQUACIES. TELIT CINTERION DOES NOT ASSUME ANY LIABILITY FOR INFORMATION PROVIDED IN THE DOCUMENT OR ARISING OUT OF THE APPLICATION OR USE OF ANY PRODUCT DESCRIBED HEREIN.

TELIT CINTERION GRANTS A NON-EXCLUSIVE RIGHT TO USE THE DOCUMENT. THE RECIPIENT SHALL NOT COPY, MODIFY, DISCLOSE, OR REPRODUCE THE DOCUMENT EXCEPT AS SPECIFICALLY AUTHORIZED BY TELIT CINTERION.

TELIT CINTERION AND THE TELIT CINTERION LOGO, ARE TRADEMARKS OF TELIT CINTERION AND ARE REGISTERED IN CERTAIN COUNTRIES. ALL OTHER REGISTERED TRADEMARKS OR TRADEMARKS MENTIONED IN THIS DOCUMENT ARE THE PROPERTY OF THEIR RESPECTIVE OWNERS AND ARE EXPRESSLY RESERVED BY TELIT CINTERION (AND ITS LICENSORS).

3 General Product Description

3.1 Overview

The LE310Q1 module is an LTE CAT1-bis communication product designed to provide IoT capabilities while maintaining ultra-low power consumption. Utilizing a single antenna, it reduces hardware design complexity and offers significant cost savings compared to LTE Cat 1 modules with dual antennas. This design also allows for a reduction in overall device dimensions, making it suitable for IoT applications with stringent size requirements. The LE310Q1 operates with GPIO voltage levels of 1.8V, ensuring low power consumption and making it an ideal solution for battery-powered applications and wearable devices.

3.2 Product Variants and Frequency Bands

Table 2: Product Variants and their Frequency Bands

Product	LTE CAT1-bis	CS Voice VoLTE	Region
LE310Q1-EU	B1, B3, B5, B7, B8, B20, B28, B34, B38, B39, B40, B41	N	EUROPE/APAC
LE310Q1-SN	B2, B4, B5, B12, B13, B14, B25, B66, B71	N	North America
LE310Q1-WW	B1,B2, B3, B4, B5, B7, B8, B12, B13, B14, B18, B19, B20, B25, B26, B28, B66, B71, B34, B38, B39, B40, B41	N	Worldwide

Refer to the "RF Section" for details information about frequencies and bands.

Note: Cellular technologies and frequency bands that are enabled may vary based on the firmware version and firmware configuration used.

3.3 Target Market

The LE310Q1 can be used for Global IoT applications such as smart metering, healthcare monitoring, home automation, industrial sensors, smart agriculture, asset tracking, point of sale, portable devices, and many more that benefit from low-power and low-data rate capabilities.

3.4 Main Features

Table 3: Functional Features

Function	Features
Modem	• LTE CAT-1 bis technology • SMS support (text and PDU) • Real-Time Clock
Interfaces	• USB 2.0 • USIF0 Main UART (AT command) • AUX UART • SPI • I2C

Function	Features
	• SIM • 6 GPIOs • Antenna tuner control • Antenna port (LTE)

3.5 Mechanical Specifications

3.5.1 Dimensions

The overall dimensions of LE310Q1-EU, LE310Q1-SN, and LE310Q1-WW are:

- Length: 18.0mm
- Width: 15.0mm
- Thickness: 2.6mm

For detailed mechanical data, refer to section Drawing.

3.5.2 Weight

The nominal weight of the LE310Q1-EU, LE310Q1-SN, LE310Q1-WW is 1.5 grams.

3.6 Temperature Range

Table 4: Temperature Range

Mode	Temperature	Note
Operating Temperature Range	–30°C ÷ +65°C	The module is fully functional(*) in all the temperature range and it fully meets the 3GPP specifications. EU RED certification range.
	–40°C ÷ +85°C	The module is fully functional (*) in all the temperature range, might slightly deviate from the 3GPP specifications.
Storage and non-operating Temperature Range	–40°C ÷ +85°C	The module is not powered and not connected to power supply.

***Functional: If applicable, the module can make and receive data calls, send and receive SMS, and handle data traffic.**

4 Pins Allocation

4.1 Pin-out

Table 5: Pin-out Information

Pin	Signal	I/O	Function	Type	Power Domain	Comment
	USB HS 2.0 Communication Port					
U19	USB_D+	I/O	USB differential Data (+)			
V18	USB_D-	I/O	USB differential Data (-)			
	Asynchronous Serial Port (USIF0) – Prog. / Data + HW Flow Control					
Y16	C103/TXD0	I	Serial data input (TXD) from DTE.	CMOS 1.8V	VP1	
AA15	C104/RXD0	O	Serial data output (RXD) to DTE.	CMOS 1.8V	VP1	
Y18	C105/RTS0	I	Input for Request to send a signal (RTS) from DTE.	CMOS 1.8V	VP1	
AA17	C106/CTS0	O	Output for Clear to send a signal (CTS) to DTE.	CMOS 1.8V	VP1	
	Auxiliary Serial Port					
Y10	TX_AUX	O	Auxiliary UART (TX Data to DTE)	CMOS 1.8V	VP1	
AA9	RX_AUX	I	Auxiliary UART (RX Data to DTE)	CMOS 1.8V	VP1	
	SIM card interface 1					
L1	SIM_CLK	O	External SIM1 signal – Clock	CMOS 1.8V	VSIM	
M2	SIM_RST	O	External SIM1 signal – Reset	CMOS 1.8V	VSIM	
N1	SIM_DAT	I/O	External SIM1 signal – Data I/O	CMOS 1.8V	VSIM	
P2	SIM_VCC	-	Power supply for the SIM1	1.8V		
	SIM card interface 2					
G4	SIM_CLK2	O	External SIM2 signal – Clock	CMOS 1.8V	VP1	
L4	SIM_RST2	O	External SIM2 signal – Reset	CMOS 1.8V	VP1	
J4	SIM_DAT2	I/O	External SIM2 signal – Data I/O	CMOS 1.8V	VP1	
K2	SIM_VCC2	-	Power supply for the SIM2	1.8V		
	SPI					
AA5	SPI_MOSI	I/O	SPI MOSI	CMOS 1.8V	VP1	
Y8	SPI_MISO	I/O	SPI MISO	CMOS 1.8V	VP1	
AA7	SPI_CLK	I/O	SPI Clock	CMOS 1.8V	VP1	
Y6	SPI_CS	I/O	SPI Chip Select	CMOS 1.8V	VP1	
	I2C					
B8	I2C_CLK	I/O	I2C Clock	CMOS 1.8V	VP1	External PU
R4	I2C_SDA	I/O	I2C Data	CMOS 1.8V	VP1	External PU
	Digital IO					

Pin	Signal	I/O	Function	Type	Power Domain	Comment
V11	GPIO1	I/O	Configurable GPIO01	CMOS 1.8V	VAON	Alt. Func. DTR
V13	GPIO2	I/O	Configurable GPIO02	CMOS 1.8V	VAON	Alt. Func. RING
D7	GPIO3	I/O	Configurable GPIO03	CMOS 1.8V	VAON	
D9	GPIO4	I/O	Configurable GPIO04	CMOS 1.8V	VAON	
D11	GPIO5	I/O	Configurable GPIO05	CMOS 1.8V	VAON	
D13	GPIO6	I/O	Configurable GPIO06	CMOS 1.8V	VAON	
	ADC and DAC					
B18	ADC	I	Analog To Digital Converter Input.	A/D	VLA	Refer to ADC Converter.
	RF Section					
A5	CELL_MAIN ANTENNA	I/O	Main Antenna (50 ohm)	RF		
	Antenna Tuner (refer to the section Antenna Tuner)					
G1	ATC1		Antenna Tuner Control	CMOS 1.8V	FEIO	
J1	ATC2		Antenna Tuner Control	CMOS 1.8V	FEIO	
	Miscellaneous Functions					
B2	S_LED	O	Status LED	CMOS 1.8V	VP1	
N16	ON_OFF#	I	Power ON / Power OFF input	1.8V Tolerant		Active Low
P18	WAKE0		Wake-Up signal from DHx status	1.8V Tolerant	VAON	
T2	FORCED_USB_BOOT	I	Emergency download mode	CMOS 1.8V	VP1	Connect to test point
R1	PWRMON	O	Power ON Monitor	CMOS 1.8V	VAON	2mA max output current
R19	HW_SHUTDOWN#	I	HW Unconditional Shutdown	1.8V Tolerant	VAON	Active Low
N4	VDD_IO	O	Internally generated voltage rail	1.8V		Refer to VDD_IO.
	Power Supply					
W1	VBATT_PA	-	Main power supply (Radio PA)	Power		
AA3	VBATT	-	Main power supply (Baseband)	Power		
A3	GND	-	Ground	Power		
A7	GND	-	Ground	Power		
A9	GND	-	Ground	Power		
A13	GND	-	Ground	Power		
A17	GND	-	Ground	Power		
B4	GND	-	Ground	Power		
B6	GND	-	Ground	Power		
B10	GND	-	Ground	Power		

Pin	Signal	I/O	Function	Type	Power Domain	Comment
B12	GND	-	Ground	Power		
B14	GND	-	Ground	Power		
B16	GND	-	Ground	Power		
C19	GND	-	Ground	Power		
D18	GND	-	Ground	Power		
F8	GND	-	Ground	Power		
F12	GND	-	Ground	Power		
F18	GND	-	Ground	Power		
G19	GND	-	Ground	Power		
H6	GND	-	Ground	Power		
H14	GND	-	Ground	Power		
J19	GND	-	Ground	Power		
K18	GND	-	Ground	Power		
M18	GND	-	Ground	Power		
N19	GND	-	Ground	Power		
P6	GND	-	Ground	Power		
P14	GND	-	Ground	Power		
T8	GND	-	Ground	Power		
T12	GND	-	Ground	Power		
U1	GND	-	Ground	Power		
V2	GND	-	Ground	Power		
W19	GND	-	Ground	Power		
Y2	GND	-	Ground	Power		
Y4	GND	-	Ground	Power		
	RESERVED / RFU / NC					
A11	RESERVED	-	RESERVED			
A15	RESERVED	-	RESERVED			
E19	RESERVED	-	RESERVED			
G16	RESERVED	-	RESERVED			
H18	RESERVED	-	RESERVED			
J16	RESERVED	-	RESERVED			
L16	RESERVED	-	RESERVED			
L19	RESERVED	-	RESERVED			
T18	RESERVED	-	RESERVED			
V9	RESERVED	-	RESERVED			
F2	RESERVED	-	RESERVED			
E1	RESERVED	-	RESERVED			
D2	RESERVED	-	RESERVED			
C1	RESERVED	-	RESERVED			

Pin	Signal	I/O	Function	Type	Power Domain	Comment
H2	RESERVED	-	RESERVED			
V7	RESERVED	-	RESERVED			
Y12	RESERVED	-	RESERVED			
AA11	RESERVED	-	RESERVED			
AA13	RESERVED	-	RESERVED			
Y14	RESERVED	-	RESERVED			

Warning: Reserved pins must not be connected.

4.2 LGA Pads Layout

Top View

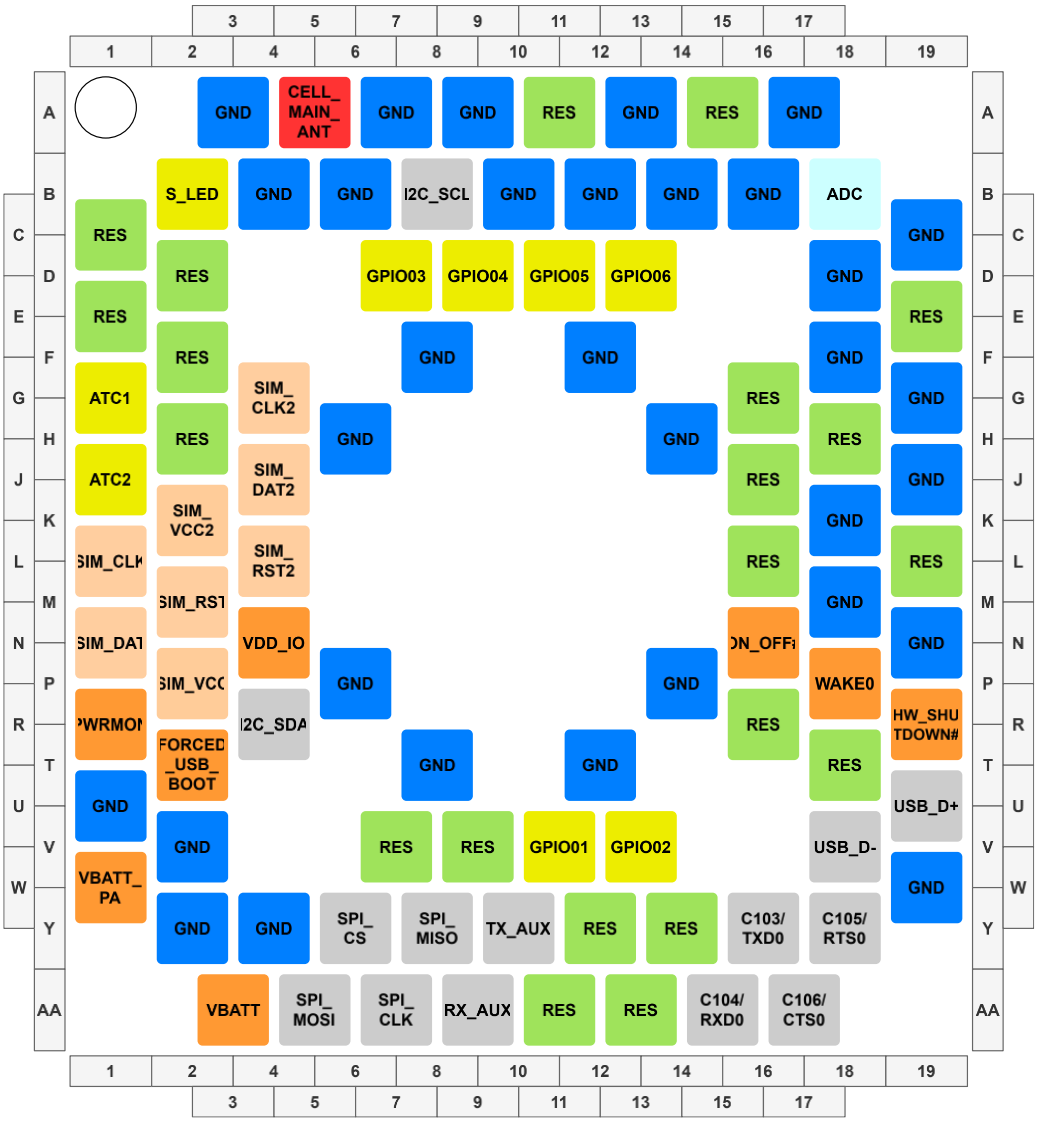

Figure 1: LGA Pads Layout

- SUPPLY AND CONTROL
- SIM CARD
- ANALOG FUNCTIONALITY
- GROUND
- DIGITAL FUNCTIONALITY
- DIGITAL COMMUNICATION
- RF SIGNALS
- NO CONNECT / RESERVED FOR FUTURE USE

4.3 Pin Characteristics by Power Domains

Table 6: VP1 Power Domain - Electrical Characteristics

Parameter	Description	Min	Max	Units
VP1	Internal Supply Voltage	1.75	1.85	V
V_{IH}	High-level input voltage	1.26	-	V
V_{IL}	Low-level input voltage	-0.3	0.36	V
V_{OH}	High-level output voltage, CMOS	1.44	-	V
V_{OL}	Low-level output voltage, CMOS	0.0	0.27	V
V_{SHYS}	Schmitt hysteresis voltage	62	111	mV
I_{OH}	Output high current (sourcing)	2		mA
I_{OL}	Output low current (sinking)		2	mA
R_{PU}	Pull-up resistance	117	331	kΩ
R_{PD}	Pull-down resistance	91	291	kΩ
C_i	Input capacitance	--	3.5	pF

Table 7: VSIM Power Domain - Electrical Characteristics

Parameter	Description	Min	Max	Units
VSIM	Internal Supply Voltage	1.75	1.85	V
V_{IH}	High-level input voltage	1.26	-	V
V_{IL}	Low-level input voltage	-0.3	0.36	V
V_{OH}	High-level output voltage	1.44	-	V
V_{OL}	Low-level output voltage	0.0	0.27	V
V_{SHYS}	Schmitt hysteresis voltage	62	111	mV

Table 8: VAON Power Domain - Electrical Characteristics

Parameter	Description	Min	Max	Units
VAON	Internal Supply Voltage	1.9	2.1	V
V_{IH}	High-level input voltage	0.7 * V_{DD}	-	
V_{IL}	Low-level input voltage	-0.3	0.2 * V_{DD}	V
V_{OH}	High-level output voltage	1.44	-	V
V_{OL}	Low-level output voltage	0.0	0.27	V
V_{SHYS}	Schmitt hysteresis voltage	200	-	mV
I_{OH}	Output high current (sourcing)	2†		mA
I_{OL}	Output low current (sinking)		2†	mA
R_{PU}	Pull-up resistance	170	230	kΩ
R_{PD}	Pull-down resistance	80	>500K (*)	kΩ
C_i	Input capacitance	1.5	2.0	pF

(*) Please contact Telit support if you need more information.

Warning: (†) Maximum output high/low current is limited to 15 µA for GPIO1 and GPIO4, exceeding this value might result in pin not meeting V_{OH} and V_{OL} ratings.

Table 9: FEIO Power Domain - Electrical Characteristics

Parameter	Description	Min	Max	Units
V_{OH}	High-level output voltage	1.44	-	V
V_{OL}	Low-level output voltage	0.0	0.27	V
C_{io}	I/O capacitance	-	3.5	pF

Table 10: VLA (ADC inputs) Power Domain - Electrical Characteristics

Parameter	Description	Min	Max	Units
V_{IN_ADC}	Voltage input swing	0	1.2	V
C_{IN_U}	Input Capacitance Unselected channel	0.1		pF
C_{IN_S}	Input Capacitance Selected channel	1.2		pF
R_{IN_U}	Input Resistance Unselected channel	29	-	MΩ
R_{IN_S}	Input Resistance Selected channel	0.26	0.75	MΩ

5 Power Supply

Board layout, power supply, and distribution network are very important parts of the full product design and strongly impact the performance of the module. Following requirements and guidelines should be taken into account to achieve a proper design.

5.1 Power Supply Requirements

The external power supply must be connected to VBATT and VBATT_PA pads and must fulfil the following requirements:

Table 11: Power Supply Requirements

Power Supply	Value
Nominal Supply Voltage	3.8V
Operating Voltage Range	Normal: 3.4 - 4.2V Extended 3.1 - 4.5V

Warning: The supply voltage of the modem must never exceed the Extended Operating Voltage Range. Improper implementation of the power supply guidelines described in this document can cause module failure.

Note:

- For PTCRB approval on the final products, the power supply is required to be within the regular “Operating Voltage Range”.
- The power supply section of the application must be carefully designed to avoid an excessive voltage drop during transmission peak current absorptions. If the voltage drop is beyond the limits of the Extended Operating Voltage range, an unintentional module power-off can occur.
- When powering on the modem, the voltage must be within the “Extended Operating Voltage Range”.
- The Hardware Design Guide specifications shall be fully acknowledged and implemented correctly to use the module in its “Extended Operating Voltage Range”.

5.2 Power Consumption

The table below represents the typical current consumption values for the LE310Q1 module across various operational modes.

Table 12: Current Consumption LE310Q1-WW, LE310Q1-EU, and LE310Q1-SN

Mode	Average (Typ.)	Mode Description
Switched Off		
Switched off	2.8 µA	Module supplied but switched Off (RTC On).
Idle Mode (Standby Mode; No data call in Progress; USB disconnected)		
AT+CFUN=0	6.8 mA	Disabled TX, RX and SIM, module is not registered on the network
AT+CFUN=1	7.1 mA	Module full functionality with power saving disabled.
AT+CFUN=4	6.8 mA	Disabled TX and RX; module is not registered on the network.
AT+CFUN=5	230 µA	Paging cycle #256 frames (2.56s DRx cycle)
	80 µA	81.92s eDRx cycle length (PTW=2.56s, DRX=1.28s)
	53 µA	327.68s eDRx cycle length (PTW=2.56s, DRX=1.28s)
	49 µA	655.36s eDRx cycle length (PTW=2.56s, DRX=1.28s)
	45 µA	1310.72s eDRx cycle length (PTW=2.56s, DRX=1.28s)
	42 µA	2621.44s eDRx cycle length (PTW=2.56s, DRX=1.28s)
AT+CFUN=9	17 µA	81.92s eDRx cycle length (PTW=2.56s, DRX=1.28s)
	8.9 µA	327.68s eDRx cycle length (PTW=2.56s, DRX=1.28s)
	6 µA	655.36s eDRx cycle length (PTW=2.56s, DRX=1.28s)
	4.9 µA	1310.72s eDRx cycle length (PTW=2.56s, DRX=1.28s)
	4.3 µA	2621.44s eDRx cycle length (PTW=2.56s, DRX=1.28s)
PSM Mode		
AT+CPSMS=1	3.9 µA	No current source or sink by any connected pin.

Note: The worst and best case current values depend by network configuration and are not controlled by the module.

Note: The electrical design for the power supply must ensure a peak current output of at least 1.0A.

The support of specific network wireless technology depends on the product variant configuration.

Note: The reported LTE CAT1-bis idle mode values are average among all the product variants and bands for each network wireless technology.

The support for a specific network wireless technology depends on the product variant configuration.

5.2.1 LE310Q1-WW Connected Mode

Table 13: LE310Q1-WW Connected Mode

Operative Mode (LTE, USB disconnected)		
LTE Data transfer Band 1 (max power)	660 mA	Average LTE Supply Current Data transfer @ maximum Pout (12 UL RBs @ 10MHz)
LTE Data transfer Band 2 (max power)	590 mA	
LTE Data transfer Band 3 (max power)	590 mA	
LTE Data transfer Band 4 (max power)	600 mA	
LTE Data transfer Band 5 (max power)	560 mA	
LTE Data transfer Band 7 (max power)	640 mA	
LTE Data transfer Band 8 (max power)	530 mA	
LTE Data transfer Band 12 (max power)	560 mA	
LTE Data transfer Band 13 (max power)	540 mA	
LTE Data transfer Band 14 (max power)	520 mA	
LTE Data transfer Band 18 (max power)	540 mA	
LTE Data transfer Band 19 (max power)	570 mA	
LTE Data transfer Band 20 (max power)	480 mA	
LTE Data transfer Band 25 (max power)	600 mA	
LTE Data transfer Band 26 (max power)	550 mA	
LTE Data transfer Band 28 (max power)	500 mA	
LTE Data transfer Band 66 (max power)	580 mA	
LTE Data transfer Band 71 (max power)	510 mA	
LTE Data transfer Band 34 (max power)[1]	260 mA	

Operative Mode (LTE, USB disconnected)		
LTE Data transfer Band 38 (max power)[1]	250 mA	
LTE Data transfer Band 39 (max power)[1]	240 mA	
LTE Data transfer Band 40 (max power)[1]	240 mA	
LTE Data transfer Band 41 (max power)[1]	250 mA	
LTE (0dBm)	135 mA	Average LTE Supply Current B2 (12 UL RBs @ 10MHz)

[1] TDD in Uplink/Downlink configuration 1 as per Table 4.2-2 in TS 36.211

5.2.2 LE310Q1-SN Connected Mode

Table 14: LE310Q1-SN Connected Mode

Operative Mode (LTE, USB disconnected)		
LTE Data transfer Band 2 (max power)	510 mA	Average LTE Supply Current Data transfer @ maximum Pout (12 UL RBs @ 10MHz)
LTE Data transfer Band 4 (max power)	590 mA	
LTE Data transfer Band 5 (max power)	520 mA	
LTE Data transfer Band 12 (max power)	580 mA	
LTE Data transfer Band 13 (max power)	540 mA	
LTE Data transfer Band 14 (max power)	530 mA	
LTE Data transfer Band 25 (max power)	510 mA	
LTE Data transfer Band 66 (max power)	560 mA	
LTE Data transfer Band 71 (max power)	540 mA	
LTE (0dBm)	135 mA	Average LTE Supply Current B2 (12 UL RBs @ 10MHz)

5.2.3 LE310Q1-EU Connected Mode

Table 15: LE310Q1-EU Connected Mode - PRELIMINARY

Operative Mode (LTE, USB disconnected)		
LTE Data transfer Band 1 (max power)	650 mA	Average LTE Supply Current Data transfer @ maximum Pout (12 UL RBs @ 10MHz) 1,3,5,7,8,20,28,34,38,39,40,41
LTE Data transfer Band 3 (max power)	570 mA	
LTE Data transfer Band 5 (max power)	530 mA	
LTE Data transfer Band 7 (max power)	630 mA	
LTE Data transfer Band 8 (max power)	570 mA	
LTE Data transfer Band 20 (max power)	510 mA	
LTE Data transfer Band 28 (max power)	520 mA	
LTE Data transfer Band 34 (max power)[1]	310 mA	
LTE Data transfer Band 38 (max power)[1]	270 mA	
LTE Data transfer Band 39 (max power)[1]	250 mA	
LTE Data transfer Band 40 (max power)[1]	250 mA	
LTE Data transfer Band 41 (max power)[1]	270 mA	
LTE (0dBm)	135 mA	Average LTE Supply Current B2 (12 UL RBs @ 10MHz)

[1] TDD in Uplink/Downlink configuration 1 as per Table 4.2-2 in TS 36.211

5.3 General Design Rule

The main guidelines for the Power Supply Design include three different design steps:

- Electrical design of the power supply
- Thermal design
- PCB layout

5.3.1 Electrical Design Guidelines

The electrical design of the power supply strongly depends on the power source where this power is drained. Power sources can be divided into three categories:

- +5V input (typically PC internal regulator output)
- +12V input (typically automotive)
- Battery

5.3.1.1 + 5V Input Source Power Supply – Design Guidelines

The desired output for the power supply is 3.8V. So, the difference between the input source and the desired output is not great and therefore a linear regulator can be used. When using a linear regulator, a proper heat sink shall be provided to dissipate the generated heat.

A switching power supply is preferred to increase power efficiency.

In case you decide to adopt a switching regulator, we suggest selecting a synchronous type, despite the little increase in price, you will enjoy many advantages (you don't need the external diode, the EMC design is generally easier, the efficiency rises from typ. 82% to typ. 93%, the switching frequency will be much higher thus allowing smaller/cheaper inductor and output filter and presenting a lower output impedance)

When the power supply output impedance is not low enough to prevent voltage drops during absorption peaks a low ESR bypass capacitor of adequate capacity is recommended. A 100 µF capacitor is usually suitable on both VBATT and VBATT_PA power lines (check that this value of output capacitor is within the acceptable range of the voltage regulator you decided to use).

Make sure that the low ESR capacitor on the power supply output is rated at least 10V.

In case a polarity inversion is not prevented in other way, a protection diode placed near the power input could help to protect the module.

Figure 2: Example of Linear Regulator with 5V Input shows an example of a linear regulator with 5V input.

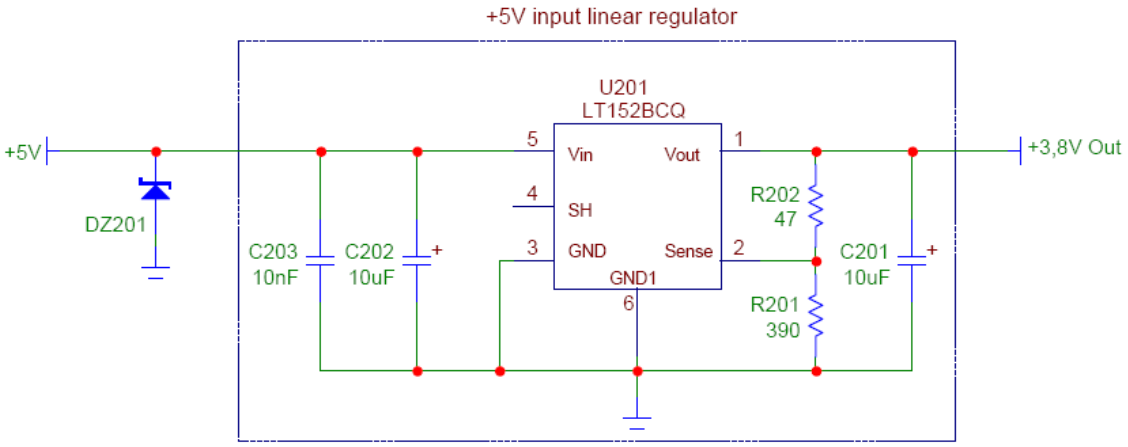

Figure 2: Example of Linear Regulator with 5V Input

5.3.1.2 + 12V Input Source Power Supply – Design Guidelines

- The desired output for the power supply is 3.8V. Due to the large difference between the input source and the desired output, a linear regulator is unsuitable and must not be used. A switching power supply is preferable for its better efficiency.
- When using a switching regulator, a 500-kHz or higher switching frequency regulator is preferable because of its smaller inductor size and its faster transient response. This allows the regulator to respond quickly to the peak current consumption.

- In any case, the selection of the frequency and switching design is related to the application to be developed as the switching frequency can also generate EMC interference.
- For car batteries (lead-acid accumulators) the input voltage can rise up to 15.8V. This must be kept in mind when choosing components: all components in the power supply must withstand this voltage.
- A bypass low ESR capacitor of adequate capacity must be provided to cut the current absorption peaks. A 100µF capacitor is usually suitable on VBATT & VBATT_PA power lines.
- Make sure that the low ESR capacitor on the power supply output is rated at least 10V.
- For automotive applications, a spike protection diode must be inserted close to the power input to clean the supply of spikes.
- A protection diode must be inserted close to the power input to protect the module from power polarity inversion. This can be the same diode as for spike protection.

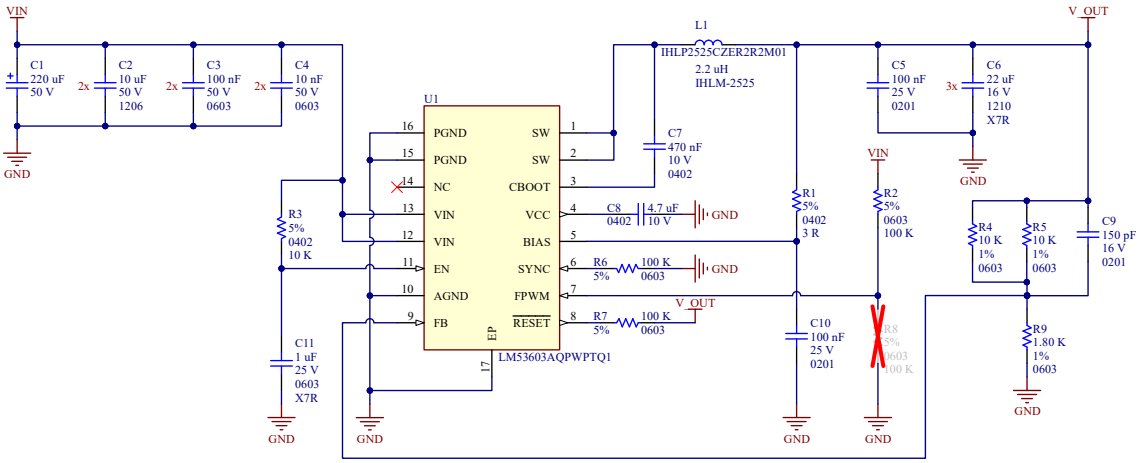

Figure 3: Example of Switching Regulator with 12V Input

5.3.1.3 Battery Source Power Supply – Design Guidelines

- The desired nominal output for the power supply is 3.8V, and the maximum normal operating voltage is 4.2V. Hence, a single 3.7V Li-Ion cell battery type is suitable for supplying the power to the module.
- LiFePO4 batteries with 3.2V nominal voltage range between 2.5V (0% charge) and 3.65V (100% charge), therefore they are not an optimal choice for direct powering the modem. In case you are using a LiFePO4 battery, you can add a buck-boost converter to supply the modem with nominal 3.8V.

- Primary Lithium batteries such as LiSOCl2 batteries have 3.6V nominal voltage but generally they have high internal resistance and the voltage drop during current absorption peaks is high and can exceed the operating range of the modem, especially when battery is partially depleted. Bobbin types are more affected by this drop than spiral types. You should carefully evaluate the voltage drop during modem operation and, in case, either add a DCDC converter to boost the voltage inside the modem operating range or add capacitance to supply the current peaks. Some LiSoCl2 batteries come already paired with a hybrid layer capacitor to support high current peaks without too much voltage drop.

Note: Do not use any Ni-Cd, Ni-MH, and Pb battery pack types directly connected to the module. Their use can lead to overvoltage on the module and damage it.

- A bypass low ESR capacitor of adequate capacity helps to cut the current absorption peaks; a 47-100µF capacitor is usually suitable.
- Make sure the low ESR capacitor is rated at least 10V.
- A protection diode should be inserted close to the power input to protect the module from power polarity inversion. Otherwise, the battery connector should be done in a way to avoid polarity inversions when connecting the battery.
- The battery capacity must be at least 600 mAh to withstand the current request while communicating at @23dBm nominal RF power.

5.3.2 Thermal Design Guidelines

The thermal design for the power supply heat sink should be done with the following specifications:

- Considering the very low current during Idle, especially if the Power Saving function is enabled, it is possible to consider from the thermal point of view that the device absorbs significant current only during a Data session.
- In LTE mode, the LE310Q1 emits RF signals continuously during transmission. Therefore, special attention must be paid on how to dissipate the heat generated.
- The LE310Q1 is designed to conduct the heat flow from the module IC's towards the bottom of the PCB across GND metal layers
- The generated heat is mostly conducted to the grounding plane under the LE310Q1 module. The application board should be properly designed to dissipate this heat.
- The design of the application board must ensure that the area under the LE310Q1 module is as large as possible. Make sure the LE310Q1 is mounted on the large ground area of application board and provides plenty of ground vias to dissipate heat.

Note: Make PCB design to have the best connection of GND pads to large surfaces of copper.

Note: The average consumption during transmission depends on the power level at which the device is requested to transmit over the network. Therefore, the average current consumption varies significantly.

Note: The thermal design for the power supply should be made keeping an average consumption at maximum transmission level during data transmission of LTE

Note: The LE310Q1 includes a function to prevent overheating.

5.3.3 Power Supply PCB Layout Guidelines

Values listed in the Electrical Design Guidelines section refer to voltage level and ripple admissible at the LGA input pads of the module. Application designer must ensure to fulfill those requirements for all working conditions.

To meet specifications defined in this document, the user must ensure that the Power Distribution Network (PDN) has minimal impedance between the PoL converter on the host board and the power pins of the module. This approach will minimize the voltage drop caused by current consumption peaks related to communication.

In designs, where the PoL converter(s) are not located close to the module it is strongly advised to adhere the following guidelines:

- Place a low ESR capacitor close to the Telit Cinterion LE310Q1 power input pads, a combination of two MLCC capacitors of values 47uF and 470nF is shown to provide adequate bypass capabilities for most applications.
- The PCB's traces from the PoL converter to the bypass capacitors must be wide enough to ensure that no significant voltage drop occur.
- The placement of the PDN on the board should be done in such a way as to guarantee that the high current return paths on the ground plane are not overlapping any noise-sensitive circuitry such as the microphone amplifier/buffer or earphone amplifier.
- The power supply input cables should be kept separate from noise-sensitive lines such as microphone/earphone cables.
- The insertion of the EMI filter(s) on the VBATT pins is recommended in those designs, where the antenna is placed close to the battery or power supply lines. For this purpose, a ferrite bead-like Murata BLM18EG101TN1, Taiyo Yuden P/N FBMH1608HM101 or equivalent can be used.

5.4 RTC Supply

RTC is operational when the LE310Q1 is in PSM or OFF state and VBATT pin is supplied.

RTC settings are lost when the VBATT supply is removed.

5.5 PWRMON Power-on Monitor

PWRMON is active (output high) when the module is powered ON (module powered ON indication) and is operating in a CFUN state as defined in the following table.

Table 16: Operating range characteristics of the supply

Power mode	PWRMON	Wakeup Source
CFUN 1	High	N/A
CFUN 5	High	DTR
CFUN 9	Low	WAKEUP / ON_OFF#

Note: Refer to 80798ST11194A "ELS63, LE910Q1 and LE310Q1 AT Commands Reference Guide", revision 9 or newer, section AT#CFUN for further details.

Warning: DTR is an alternate function of GPIO1 and the user shall enable this functionality before entering CFUN5 mode, refer to AT Command Reference Guide, AT#GPIO section for further details about enabling alternate functions.

This signal is present on pin R1. The operating range characteristics of the PWRMON signal are:

Table 17: Operating Range Characteristics of PWRMON signal

Item	Min	Typical	Max
Output voltage	-	1.8V	-
Output current	-	-	2 mA

Note: The Output Current MUST never be exceeded; care must be taken when designing the application section to avoid excessive current consumption.

Note: This pin can be used only to monitor the module state with Hi-Z I/O port or use it as enabler of some circuit, for example drive a MOSFET gate.

5.6 VDD_IO

VDD_IO, pin N4, is an internally generated 1.8V supply rail, that can be used to supply small devices (ie. Signal voltage level translators) directly from the module.

This power supply rail is active depending on CFUN state of the module according to the following table.

Table 18: Operating range characteristics of the supply

Power mode	VDD_IO status
CFUN 1	active
CFUN 5	intermittent
CFUN 9	disabled

Note: VDD_IO is active in CFUN5 mode whenever DTR or USB connection triggers a wakeup event.

User shall never exceed the power budget as defined in the following table because this might result in module malfunction.

Table 19: Operating range characteristics of the supply

Item	Min	Typical	Max
Output voltage	-	1.8V	-
Output current	-	-	50mA
Output bypass capacitor (inside the module)		1µF	

Warning: The Output Current shall never be exceeded; care must be taken when designing the application section to avoid excessive current consumption.

6 Digital Section

6.1 Logic Levels

Unless otherwise specified, all the interface circuits of the LE310Q1 are 1.8V CMOS logic.

The following tables show the logic level specifications used in the LE310Q1 interface circuits.

6.1.1 1.8V Standard GPIOs

Table 20: 1.8V Standard GPIOs

Parameter	Min	Max
Input level on any digital pin when on.	-0.3V	+3.6V

6.1.2 SIM Voltage Pads - Absolute Maximum Ratings

Table 21: Absolute Maximum Ratings - Not Functional

Parameter	Min	Max
Input level on any digital pin when on	-0.3V	+2.1 V
Input voltage on analog pins when on	-0.3V	+2.1 V

For functional characteristics refer to section “Pin Characteristics by Power Domains”. For SIM1 interface refer to VSIM power domain, for SIM2 interface refer to VP1 power domain.

6.2 Power On

6.2.1 Module Power On

To turn on the LE310Q1 module, the ON_OFF# pad must be asserted low for more than 1 second, and then released.

The maximum current that can be drained from the ON/OFF # pad is 13uA. This pin is pulled up internally; customers should expect to see VBATT at the output.

The figure below illustrates a simple circuit to power on the module using an inverted buffer output.

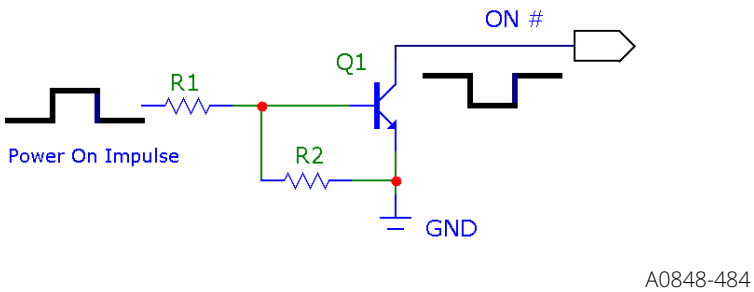

Figure 4: Power-on Circuit; illustrates a simple circuit to power on the module using an inverted buffer output.

Note: Do not use any pull up resistor on the ON_OFF# line, it is internally pulled up. Using pull up resistor may bring to latch up problems on the LE310Q1 power regulator and improper power on/off of the module. The line ON_OFF# must be connected only in open collector or open drain configuration.

Note: To avoid back powering, it is recommended to prevent any HIGH logic level signal from being applied to the digital pins of LE310Q1 when the module is powered off or during an ON-OFF transition.

Note: SW_RDY signal is not yet implemented as alternate function of GPIO. It will be available in a next software release.

Note: To check if the device has powered on, the hardware line PWRMON should be monitored.

Warning: Any low pulse on ON_OFF# pad lasting longer than 10ms will trigger a boot up procedure. Customer shall ensure that no such accidental/undesired pulse will happen under any working condition.

After turning on the LE310Q1 module, a predefined internal boot sequence performs the HW and SW initialization of the module, which takes some time to complete. During this process, the LE310Q1 is not accessible.

As shown in the below figure, the LE310Q1 tipically becomes operational in less than 1.2 seconds after ON_OFF# is asserted.

Note: During the Initialization state, AT commands are not available. The DTE host must wait for the Activation state prior to communicating with the LE310Q1.

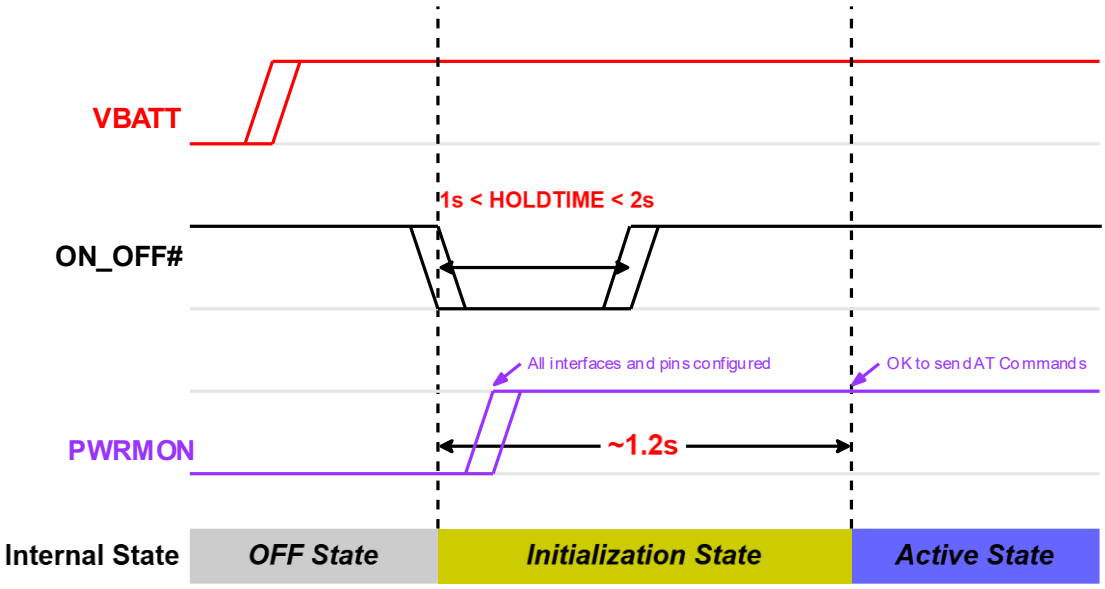

Figure 5: Power ON Sequence

A flow chart showing the proper turn on procedure is displayed below:

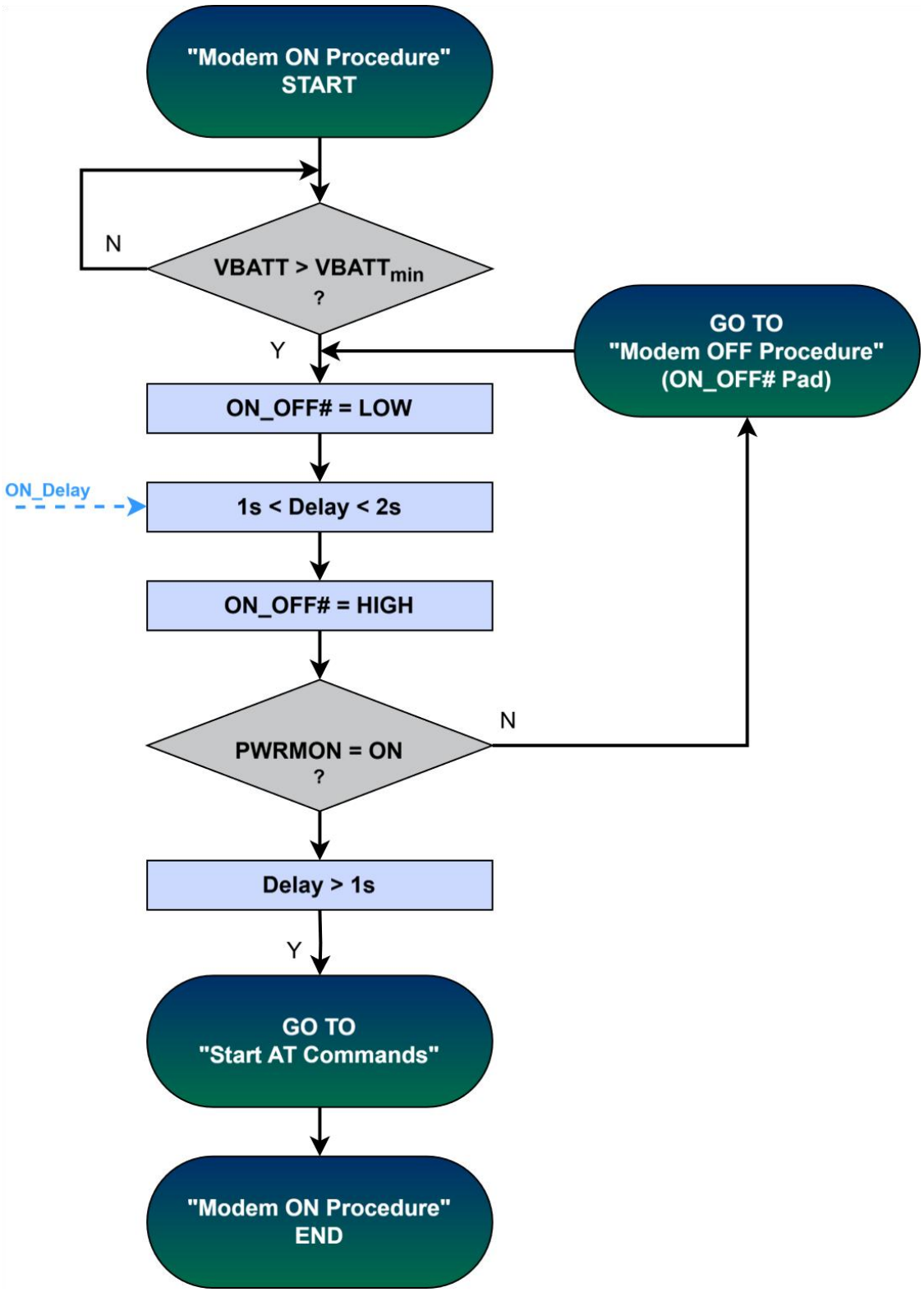

Figure 6: Turn-ON Procedure

Note: Active low signals are labelled with a name that ends with "#" or with "_N".

6.2.2 Wake-up

WAKE0 pin P18 is a dedicated input pin for asynchronous wakeup from CFUN9 status. This pin should be set to a high logic value (LVCMOS 1.8V logic thresholds) to trigger a wakeup event.

Warning: User should ensure no spike or coupled noise will trigger an undesired wakeup event.

Warning: User cannot rely on PWRMON or VDD_IO to supply the 1.8V voltage level needed to trigger the wakeup event because neither are available during CFUN9 power state.

6.3 Power Off

Turning off the device can be done in any of the following ways:

- Shutdown by software using related AT command
- Hardware shutdown using ON_OFF# pad
- Unconditional shutdown using HW_SHUTDOWN# pad

When the device is shut down by a software command or a hardware shutdown, it sends a detach disconnection request to the network, informing the network that the device will no longer be reachable.

Note: To check if the device has turned off, monitor the PWRMON hardware line. When PWRMON goes low, this indicates that the device is turned off.

Note: To avoid back powering it is recommended to prevent any HIGH logic level signal from being applied to the digital pins of LE310Q1 when the module is powered off or during an ON-OFF transition.

Warning: Not following the recommended shut-down procedures might damage the device and consequently void the warranty.

6.3.1 Power Off by Software Command

The LE310Q1 module can be shut down via a software command.

When a shutdown command is sent, the LE310Q1 enters the Finalization state and at the end of the finalization process shuts down PWRMON.

The duration of the Finalization state may vary depending on the current situation of the module, so it is not possible to define a value.

Usually, it will take less than 40 milliseconds from sending a shutdown command until a complete shutdown is achieved. The DTE host should monitor the PWRMON status to observe the actual power-off.

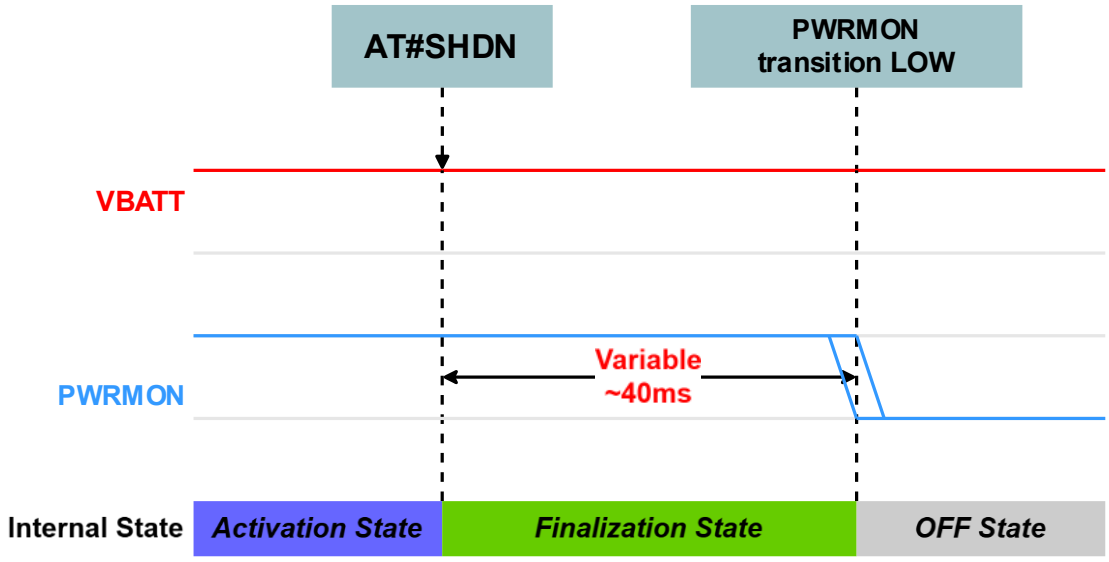

Figure 7: Shutdown by Software Command

Note: To check if the device is turned off, monitor the PWRMON hardware line. When PWRMON goes down, the device has powered off.

6.3.2 Power Off by ON_OFF# pad

To turn off the LE310Q1 module, the ON_OFF# pad must be asserted low for more than 2s seconds, and then released. When the hold time of ON/OFF# is more than 2s seconds, the LE310Q1 enters the Finalization state and finally shuts down PWRMON.

The duration of the Finalization may vary depending on the current situation of the module, so it is not possible to define a value. Usually, it will take less than 40 milliseconds for the finalizaton phase to complete. The DTE host should monitor the PWRMON status to observe the actual power-off.

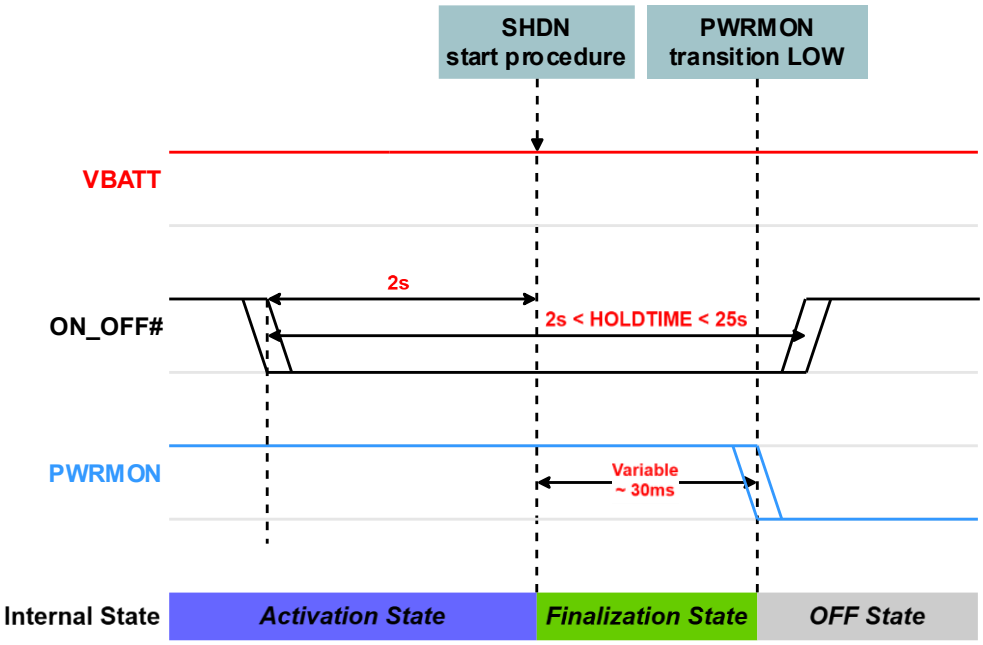

Figure 8: Hardware Shutdown

Note: To check whether the device is turned off, monitor the PWRMON hardware line. When PWRMON goes down, the device has powered off.

6.3.3 Fast Shutdown

The graceful power down procedure is described in chapter 6.3.1. It normally takes around 240 milliseconds to de-attach network and make LE310Q1 internal filesystem properly closed.

In the event of an unwanted power supply loss, LE310Q1 can be switched off without any risk of filesystem data corruption by implementing Fast Power Down feature.

The Fast Power Down feature allows to reduce the current consumption and the time-to-power off to minimum values.

Note: Refer to "ELS63, LE910Q1 and LE310Q1 AT Commands Reference Guide" (Fast power down - #FASTSHDN) in order to set up detailed AT command.

6.3.3.1 Fast Shutdown by Hardware

The Fast Shut Down is triggered by a GPIO. Customers wishing to implement the Fast Shut Down should configure a GPIO as the trigger pin for the Fast Shut Down through AT command. The high-to-low transition of a GPIO triggers the Fast Shut Down and then the LE310Q1 module turns off within 8ms

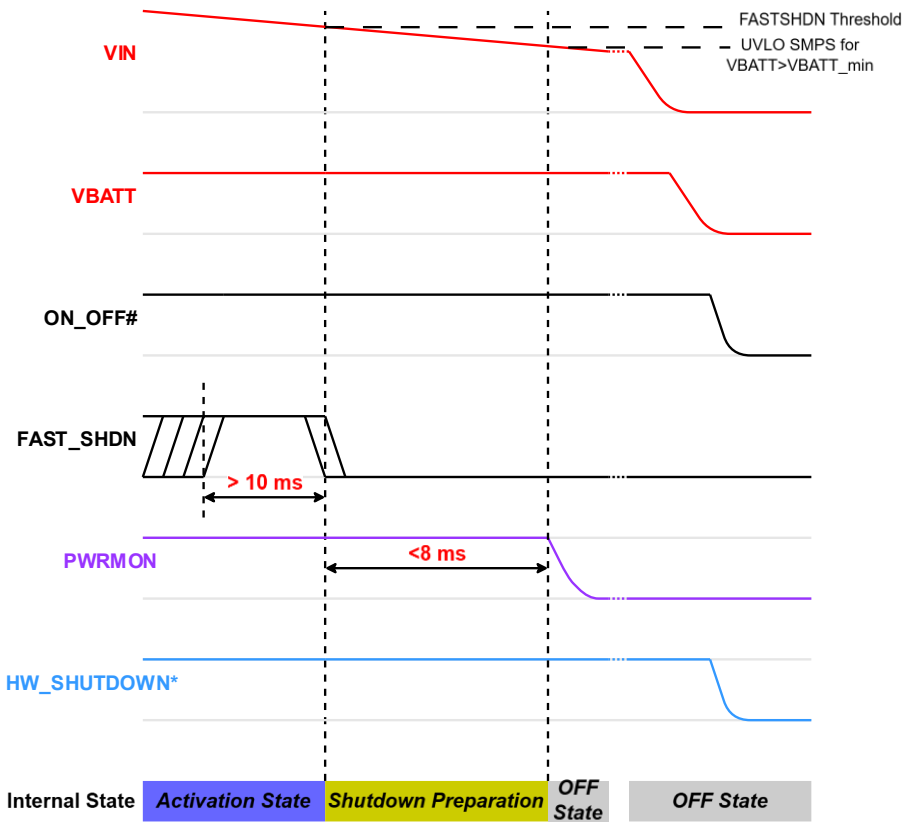

Figure 9: Hardware Fast Shutdown

Below is the example hardware configuration for the Fast Shut Down.

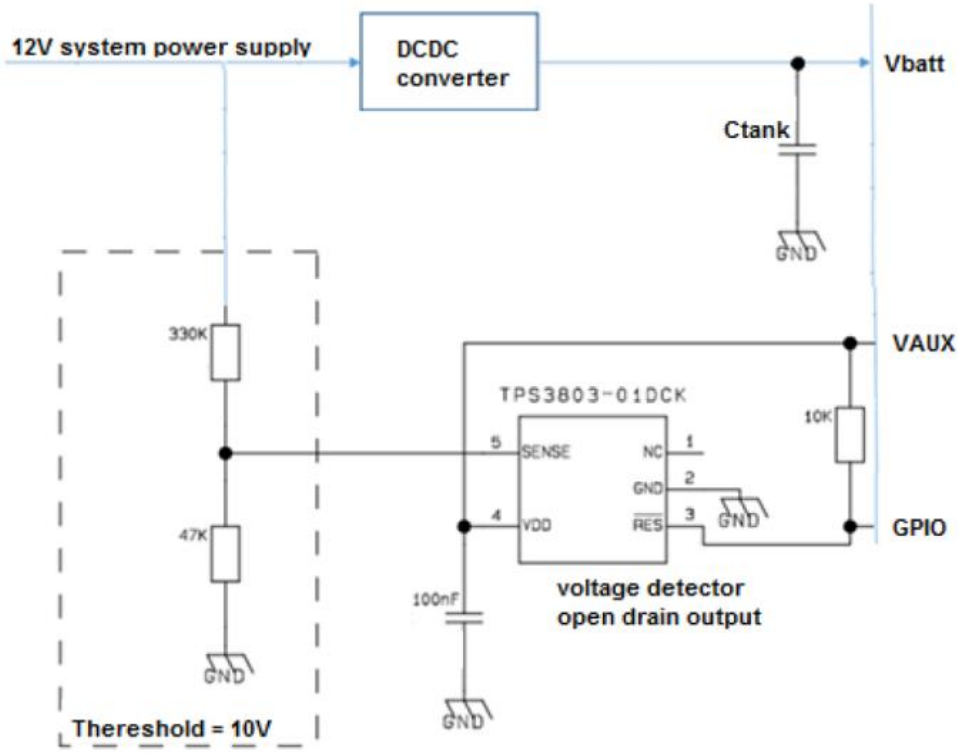

Figure 10: Example for Fast Shut Down circuit

Note: Consider the voltage drop under max current conditions when defining the voltage detector threshold in order to avoid unwanted shutdown.

The most important factor to consider is that a system should store enough energy to allow the module to turn off safely after the Fast Shut Down is triggered. Otherwise, unwanted memory corruption may occur. The VAUX and PWRMON pins can be used to check if the LE310Q1 is turned off. If VAUX and PWRMON are low, LE310Q1 is off.

The following formula can be used to calculate Ctank value to provide the module with sufficient energy during the Fast Shut Down.

$$C = I \frac{\Delta t}{\Delta V}$$

The LE310Q1 consumes up to 660mA and 8ms is the typical time to perform shutdown and 1V is the minimum voltage margin from the threshold of LE310Q1 hardware reset.

The Ctank capacitor value should be optimized depending on the detection voltage and load current LE310Q1 consumes in the customer's system.

Note: Please check timings of input supply drop, GPIO associated to FASTSHDN transition, VBATT discharge and VAUX status to confirm the design effectiveness.

Note: Customer should make provisions to include a Ctank capacitor capable of sustaining at least the module consuption in idle condition.

Warning: If low ESR ceramic capacitors are used for Ctank it is recommended to add a current limiting feature in the DCDC converter to avoid inrush current side effects.

6.3.3.2 Fast Shutdown by Software

The Fast Power Down can be triggered directly by the AT command AT#FASTSHDN, check 80798ST11194A "ELS63, LE910Q1 and LE310Q1 AT Commands Reference Guide" for more details.

6.3.4 Emergency Reset

The LE310Q1 module provides an active low HW_SHUTDOWN# pin on pad R19, this signal acts as a reset of the baseband and supply section, and if held low for more than 5 s, completely discharges internal power rails performing the same functionality of an unconditional shutdown. Releasing the HW_SHUTDOWN# pin will immediately initiate the power up procedure regardless of the state of the ON_OFF# signal. The module will not perform any disconnection procedure from the network and will reset regardless of its operational status.

HW_SHUTDOWN# is an active low signal and must be driven in open-drain or open-collector configuration with no required external pull-up resistor.

Warning: Emergency Reset may be triggered by noise coupled with HW_SHUTDOWN# signal. PCB routing must take in account this.

Open-drain or open-collector component must be placed close to HW_SHUTDOWN# pin R19.

Warning: Emergency Reset by toggling VBATT Power must not be used during the normal shutdown operation of the device. It does not detach the device from the network and may damage the memory content. It must be performed only as an emergency exit procedure.

INCORRECT SHUTDOWN Procedure may void the warranty.

6.4 Communication Ports

6.4.1 SPI

The LE310Q1 module is provided by a standard 3-wire SPI master or slave interface with chip select control. The following table represents the available signals:

Table 22: SPI Available Signals

PAD	Signal	I/O	Function	Type	Note
AA5	SPI_MOSI	I/O	SPI MOSI	LVCMOS 1.8V	
Y8	SPI_MISO	I/O	SPI MISO	LVCMOS 1.8V	
AA7	SPI_CLK	I/O	SPI Clock	LVCMOS 1.8V	
Y6	SPI_CS	I/O	SPI Chip Select	LVCMOS 1.8V	

Note: The SPI interface is in the roadmap for future SW releases.

6.4.2 Serial Ports

The LE310Q1 module provides 2 Asynchronous serial ports:

- Asynchronous Serial Port (USIF0)
- Auxiliary Serial Port

Several configurations can be implemented on OEM hardware, but the most common are:

- RS232 PC COM port
- Microcontroller UART @ 1.8V (Universal Asynchronous Receive Transmit)

- Microcontroller UART @ 5V or other voltages different from 1.8V

Depending on the serial port voltage levels on the OEM hardware, a level translator circuit may be needed. The LE310Q1 digital interfaces are LVCMOS 1.8V unless explicitly stated otherwise in the Pin-out section.

6.4.2.1 Asynchronous Serial Port (USIF0)

The serial port 0 on the LE310Q1 is a +1.8V UART with 4 RS232 signals. It differs from the PC-RS232 because of signal polarity (RS232 is reversed) and voltage levels.

The following table represents the available signals:

Table 23: Asynchronous Serial Port (USIF0) Available Signals

RS232 Pin	Signal	PAD	Name	Usage
2	C104/ RXD0	AA15	Transmit line	Output transmit line of LE310Q1 UART.
3	C103/ TXD0	Y16	Receive line	Input receiver of the LE310Q1 UART Internal Pull-up.
4	DTR	V11†	Data Terminal Ready	DTR is an Alternate Function of GPIO1
8	C106/CTS0	AA17	Clear to Send	Output from the LE310Q1 that controls the Hardware flow control.
7	C105/RTS0	Y18	Request to Send	Input to the LE310Q1 that controls the Hardware flow control Internal Pull-up.
9	RING	V13†	Ring Indicator	RING is an Alternate Function of GPIO2

Note: According to V.24, some signal names are referred to the application side, therefore on the LE310Q1 side these signals are in the opposite direction:

- TXD on the application side will be connected to the receiving line (here named C103/TXD0).
- RXD on the application side will be connected to the transmit line (here named C104/RXD0).
- For applications where the flow control is not needed or the host does not provide a full UART interface, only the TXD and RXD lines can be connected, the other lines can be left open. For these use cases it is suggested to enable the software flow control.

To avoid back powering, it is required not to drive any signal to logic level High if VBATT is not supplied to the module, the module is in off state or in any of the low power modes or during an

ON/OFF transition (RESET included). The PWRMON signal can be used to identify such states, no digital inout signal should be actively driven to logic high when PWRMON signal is Low, for pull-up resistors connected to host supply rails the user shall ensure that the total input current flowing into the LE310Q1 module is less than 2mA .

Note: DTR and RING are Alternate Functions of GPIO1 and GPIO2 respectively and shall be configured by user if needed. See 80798ST11194A "ELS63, LE910Q1 and LE310Q1 AT Commands Reference Guide" section AT#GPIO.

6.4.2.2 Auxiliary Serial Port

The auxiliary serial port on the LE310Q1 is a LVCMOS 1.8V interface comprising only the RX and TX signals. The signals of the LE310Q1 serial port are:

Table 24: LE310Q1 Serial Port Signals

RS232 Pin	Signal	Pad	Name	Usage	Note
Y10	TX_AUX	O	Auxiliary UART (TX Data to DTE)	CMOS 1.8V	
AA9	RX_AUX	I	Auxiliary UART (RX Data from DTE)	CMOS 1.8V	Internal Pull-up

6.5 General Purpose I/O

The LE310Q1 module is equipped with a set of Configurable Digital Input / Output pins (LVCMOS 1.8V). The Input pads can only be read; they report the digital value (high or low) present on the pad at the read time. The Output pads can be written or queried to set and confirm the value of the output driver.

For GPIOs providing more than one predefined functionality, the alternate function pin is internally controlled by the LE310Q1 firmware and its behavior depends on the implemented function.

The following table represents the available GPIO on the LE310Q1:

Table 25: GPIO

PAD	Signal	I/O	Default State	Note
V11	GPIO_01	I/O	Pull-up	See 4.3 , pay attention to driving strenght limitation
V13	GPIO_02	I/O	Pull-down	See 4.3
D7	GPIO_03	I/O	Pull-down	See 4.3
D9	GPIO_04	I/O	Hi-Z(*)	See 4.3 , be careful to driving strenght limitation
D11	GPIO_05	I/O	Pull-down	See 4.3
D13	GPIO_06	I/O	Pull-down	See 4.3

(*) Please contact Telit support if you need more information

6.5.1 Using a GPIO as an INPUT

GPIO pads, when used as inputs, can be connected to another device's digital output and report its status, provided that this device has interface levels compatible with the 1.8V LVCMOS levels of the GPIO.

Note: To avoid a back powering, it is recommended to avoid having any HIGH logic level signal applied to the digital pins of the LE310Q1 when the module is powered off or during an ON/OFF transition.

6.5.2 Using a GPIO as an OUTPUT

The GPIO pads, when used as outputs, can drive 1.8V LVCMOS or level compatible digital devices or compatible hardware. When set as outputs, the pads have a push-pull output and therefore the pull-up resistor may be omitted.

Note: Section 4.3 contains detailed information concerning electrical characteristics of GPIO pins.

6.6 ADC Converter

The LE310Q1 is equipped with a single 12bit AD converter input accessible through the ADC line, which is located on Pad B18. The allowed input voltage range for this pin is specified in Section 4.3 and Table 10.

6.6.1 Using ADC Converter

Refer to 80798ST11194A ELS63, LE910Q1 and LE310Q1 AT Commands Reference Guide for the full description of this function.

6.7 SIM Card Interface

The LE310Q1 provides two SIM card interfaces.

Table 26: LE310Q1 SIM1 Card Interface

PAD	Signal	I/O	Function
L1	SIM_CLK	O	External SIM signal – Clock
M2	SIM_RST	O	External SIM signal – Reset
N1	SIM_DAT	I/O	External SIM signal – Data I/O
P2	SIM_VCC	-	Power supply for the SIM
	SIM_CD	I	External SIM - Card Detect

Table 27: LE310Q1 SIM2 Card Interface

PAD	Signal	I/O	Function
G4	SIM_CLK2	O	External SIM signal – Clock
L4	SIM_RST2	O	External SIM signal – Reset
J4	SIM_DAT2	I/O	External SIM signal – Data I/O
K2	SIM_VCC2	-	Power supply for the SIM

The SIM Interfaces supports only 1.8V compliant SIM cards.

The SIM Card interfaces can either be used to connect to an host-provided SIM Card (eSIM) or SIM Card holder.

Note: To use SIM_CD (also called SIMIN) and associate a GPIO to this functionality, please refer to 80798ST11194A "ELS63, LE910Q1 and LE310Q1 AT Commands Reference Guide" sections AT#GPIO and AT#SIMINCFG

6.7.1 SIM Schematic Example

Figure 11 figure shows how to design the application side and what values to assign to the components.

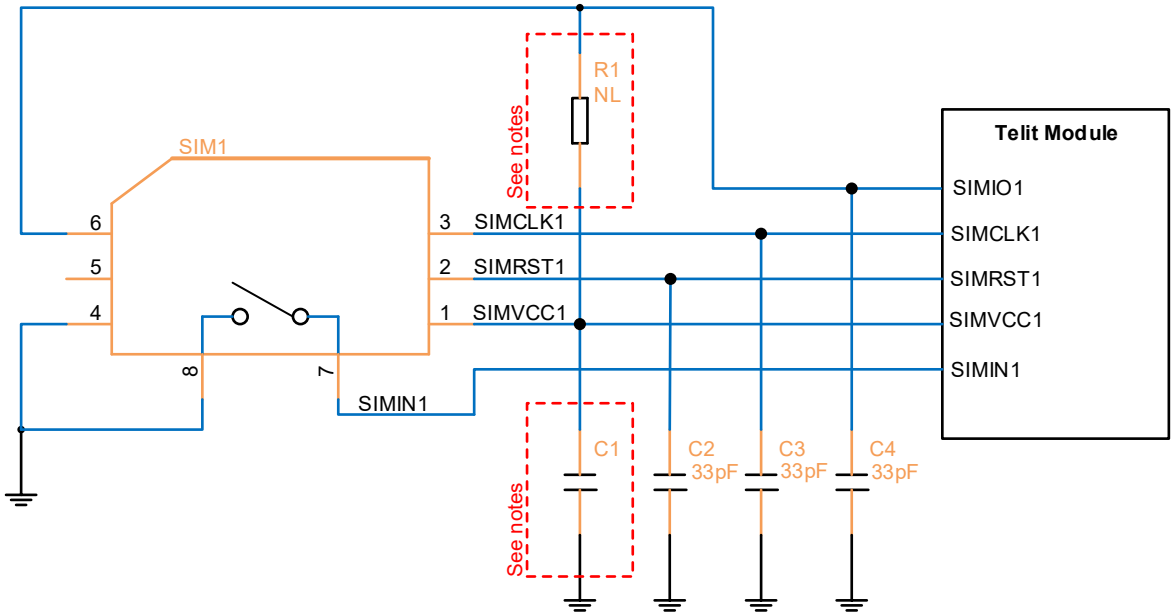

Figure 11: SIM1 Schematics

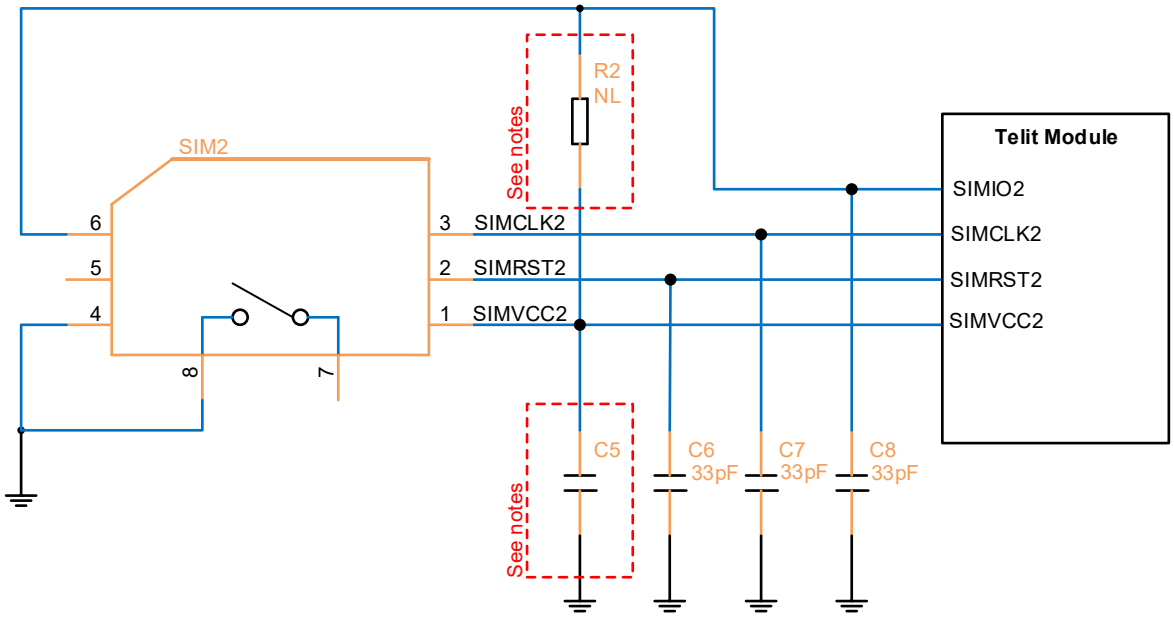

Figure 12: SIM2 schematics

Note: The resistor value on SIMIO pulled up to SIMVCC must be defined to comply with the 3GPP specification for USIM electrical testing. The LE310Q1 module contains internal pull-up resistors on SIMIO1 and SIMIO2.

The un-mounted R1 and R2 option in the application can be used to tune SIMIO1 and SIMIO2 timing if required.

Warning: SIMVCC2 rail is active whenever SIMVCC1 is.

Table below lists the values of C1 and C5 to be adopted with the LE310Q1 product:

Table 28: SIM Interface – C1 and C5

Product P/N	C1 (nF)	C5 (nF)
LE310Q1	100	100

6.8 Forced USB Boot

If standard firmware upgrade procedures fail or are not possible, the FORCED_USB_BOOT pin must be set to 1.8V at power-up to set the module in program mode.

FORCED_USB_BOOT pin must be connected only during the firmware upgrade operation. It must be left open during normal operation.

7 RF Section

7.1 TX Output Power

7.1.1 LE310Q1-EU, LE310Q1-SN, and LE310Q1-WW

Table 29: LE310Q1-EU, LE310Q1-SN, and LE310Q1-WW TX Output Power

Band	Mode	Class	RF power (dBm) Nominal*
B1, B2, B3, B4, B5, B7, B8, B12, B13, B14, B18, B19, B20, B25, B26, B28, B66, B71, B34, B38, B39, B40, B41	(LTE) CAT1-bis	3	23dBm

*** Max output power tolerance range according to 3GPP TS 36.521-1 or better**

7.2 RX Sensitivity

7.2.1 LE310Q1-WW RX sensitivity

The following 3GPP measurement conditions are used to define RX sensitivity:

Table 30: Reception Sensitivity

Technology	3GPP Compliance
4G LTE Cat1-bis	Throughput >95% 10MHz

Table 31: Typical Sensitivity Levels

Mode	Sensitivity	3GPP minimum requirements
LTE 2100 – B1	-98.6 dBm	-93.3dBm
LTE 1900 – B2	-99.4 dBm	-91.3dBm
LTE 1800 – B3	-99.1 dBm	-90.3dBm
LTE AWS – B4	-98.9 dBm	-93.3dBm
LTE 850 – B5	-98.7 dBm	-91.8dBm
LTE 2600 – B7	-98.5 dBm	-91.3dBm
LTE 900 – B8	-99.3 dBm	-90.8dBm
LTE 700 – B12	-98.0 dBm	-90.3dBm
LTE 750 – B13	-98.1 dBm	-90.3dBm
LTE 700PS – B14	-98.5 dBm	-90.3dBm
LTE 850 – B18	-98.1 dBm	-93.8dBm
LTE 850 – B19	-98.8 dBm	-93.8dBm
LTE 800 – B20	-99.5 dBm	-90.8dBm
LTE 1900 – B25	-99.4 dBm	-91.3dBm
LTE 850 – B26	-99.8 dBm	-91.3dBm
LTE 700 – B28	-99 dBm	-92.3dBm
LTE 2100 – B66	-99 dBm	-92.8dBm

Mode	Sensitivity	3GPP minimum requirements
LTE 600 – B71	-99.2 dBm	-90.5dBm
LTE TDD 2000 – B34	-100.2 dBm	-93.8dBm
LTE TDD 2600 – B38	-98.2 dBm	-91.8dBm
LTE TDD 1800 – B39	-100.8 dBm	-93.8dBm
LTE TDD 2300 – B40	-99.1 dBm	-93.8dBm
LTE TDD 2500 – B41	-98.4 dBm	-91.8dBm

Note: The sensitivity level may present a deviation of approximately +/- 2dB depending on device and channel;

the level shown is the typical value.

7.2.2 LE310Q1-SN RX sensitivity

The following 3GPP measurement conditions are used to define RX sensitivity:

Table 32: Reception Sensitivity

Technology	3GPP Compliance
4G LTE Cat1-bis	Throughput >95% 10MHz

Table 33: Typical Sensitivity Levels

Mode	Sensitivity	3GPP minimum requirements
LTE 1900 – B2	-98.9 dBm	-91.3dBm
LTE AWS – B4	-98.4 dBm	-93.3dBm
LTE 850 – B5	-99.7 dBm	-91.8dBm
LTE 700 – B12	-99.1 dBm	-90.3dBm
LTE 750 – B13	-98.9 dBm	-90.3dBm
LTE 700PS – B14	-99.2 dBm	-90.3dBm
LTE 1900 – B25	-98.9 dBm	-91.3dBm
LTE 2100 – B66	-98.4 dBm	-92.8dBm
LTE 600 – B71	-99.6 dBm	-90.5dBm

Note: The sensitivity level may present a deviation of approximately +/- 2dB depending on device and channel;

the level shown is the typical value.

7.2.3 LE310Q1-EU RX sensitivity

The following 3GPP measurement conditions are used to define RX sensitivity:

Table 34: Reception Sensitivity

Technology	3GPP Compliance
4G LTE Cat1-bis	Throughput >95% 10MHz

Table 35: Typical Sensitivity Levels - PRELIMINARY

Mode	Sensitivity	3GPP minimum requirements
LTE 2100 – B1	-98.2 dBm	-93.3dBm
LTE 1800 – B3	-98.7 dBm	-90.3dBm
LTE 850 – B5	-99.6 dBm	-91.8dBm
LTE 2600 – B7	-96.2 dBm	-91.3dBm
LTE 900 – B8	-99.4 dBm	-90.8dBm
LTE 800 – B20	-97.2 dBm	-90.8dBm
LTE 700 – B28	-98.7 dBm	-92.3dBm
LTE TDD 2000 – B34	-100.0 dBm	-93.8dBm
LTE TDD 2600 – B38	-98.6 dBm	-91.8dBm
LTE TDD 1800 – B39	-100.1 dBm	-93.8dBm
LTE TDD 2300 – B40	-98.6 dBm	-93.8dBm
LTE TDD 2500 – B41	-98.7 dBm	-91.8dBm

Note: The sensitivity level may present a deviation of approximately +/- 2dB depending on device and channel;

the level shown is the typical value.

7.3 Antenna Requirements

The antenna connection and board layout design are the most important aspects of the overall product design as they strongly affect the general performance of the product. Therefore, it is essential to carefully read and adhere to the requirements and guidelines for a proper design.

The antenna and antenna transmission line on the PCB for a Telit Cinterion LE310Q1 device must fulfil the following requirements:

Table 36: Antenna and Antenna Transmission Line on PCB

Item	Value
Frequency range	Depending on the frequency band(s) provided by the network operator, the customer shall use the most suitable antenna for that/those band(s).
Impedance	50 ohm
Input power	> 24dBm average power.
VSWR absolute max	<= 10:1 (limit to avoid permanent damage)
VSWR recommended	<= 2:1 (limit to fulfill all regulatory requirements)

7.3.1 PCB Design Guidelines

When using the LE310Q1, since there is no antenna connector on the module, the antenna must be connected to the LE310Q1 antenna pad using a transmission line implemented on the PCB.

This transmission line must fulfil the following requirements:

Table 37: Antenna Pad Requirements

Item	Value
Characteristic Impedance	50 ohm (+-10%)
Max Attenuation	0.3dB
Coupling	Coupling with other signals shall be avoided.
Ground Plane	The cold End (Ground Plane) of the antenna shall be equipotential to the LE310Q1 ground pins.

The transmission line should be designed according to the following guidelines:

- Make sure that the transmission line characteristic impedance is 50ohm.
- Keep line on the PCB as short as possible. The antenna line losses shall be less than about 0.3dB.
- Line geometry should have uniform characteristics with constant cross-section. Avoid meanders and changes in the geometry of the transmission line.
- Any kind of suitable geometry/structure (microstrip, stripline, coplanar, grounded coplanar waveguide...) is allowed to connect the module to the antenna.
- If the transmission line requires a GND reference plane, ensure that this plane has no slots or cuts that might affect the return current path, hence altering the expected impedance. Proper design guidelines for high-speed RF designs should be followed.
- If possible, use one layer of the PCB as the reference ground plane and refer the transmission line to this plane.
- It is advisable although not strictly necessary, to provide a GND plane also on the sides of the antenna transmission line (separation >3W where W is the trace width) with proper via stitching to the reference GND plane underneath.
- Avoid routing any digital signal or noisy power supply directly below the antenna signals.
- Place the noisy EM devices as far as possible from the LE310Q1 antenna line.
- Keep the antenna line far away from the LE310Q1 power supply lines.
- If EM noisy devices (such as fast switching ICs, LCD, and so on) are present on the PCB hosting the LE310Q1, take care of the shielding of the antenna line by burying it in an inner layer of PCB and surrounding it with the ground planes, or shield it with a metal frame cover.
- If the noisy EM devices are not present around the line, the use of geometries such as microstrip or grounded coplanar waveguide is preferable since they typically ensure less attenuation than a stripline of the same length.

7.4 Antenna Tuner

THIS SECTION WILL BE AVAILABLE IN THE NEXT DOCUMENT RELEASES.

Please contact Telit support if you need more information.

8 Mechanical Design

8.1 Drawing

8.1.1 LE310Q1-EU, LE310Q1-SN, and LE310Q1-WW

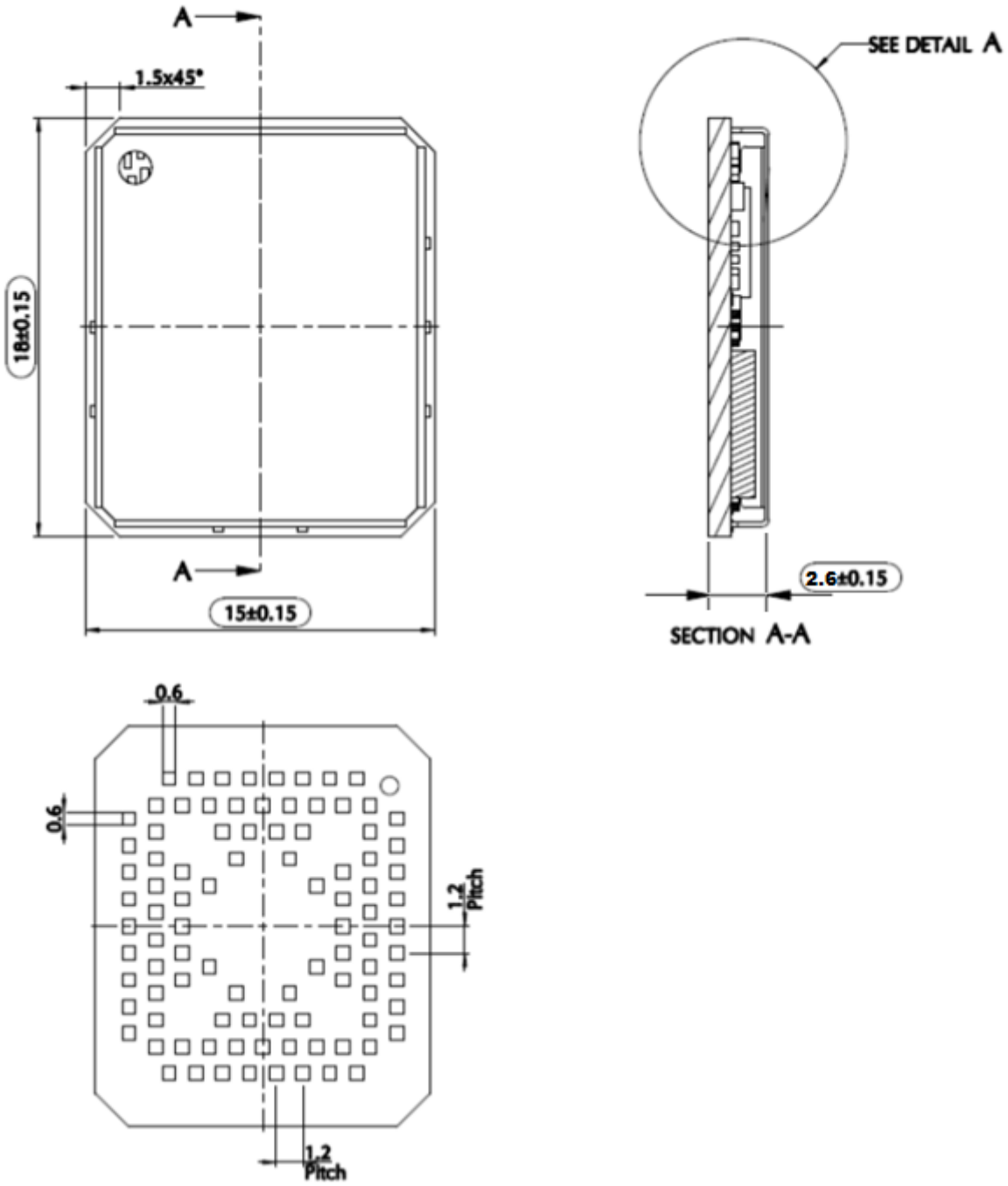

Figure 13: Mechanical Drawing LE310Q1-EU, LE310Q1-SN, and LE310Q1-WW

Note: Dimensions in mm. General Tolerance ±0.1, Angular Tolerance ±1°. The tolerance is not cumulative.

9 Application PCB Design

The LE310Q1 modules are designed to be compliant with a standard lead-free SMT process.

9.1 Recommended Footprint for the Application

9.1.1 LE310Q1-EU, LE310Q1-SN, and LE310Q1-WW

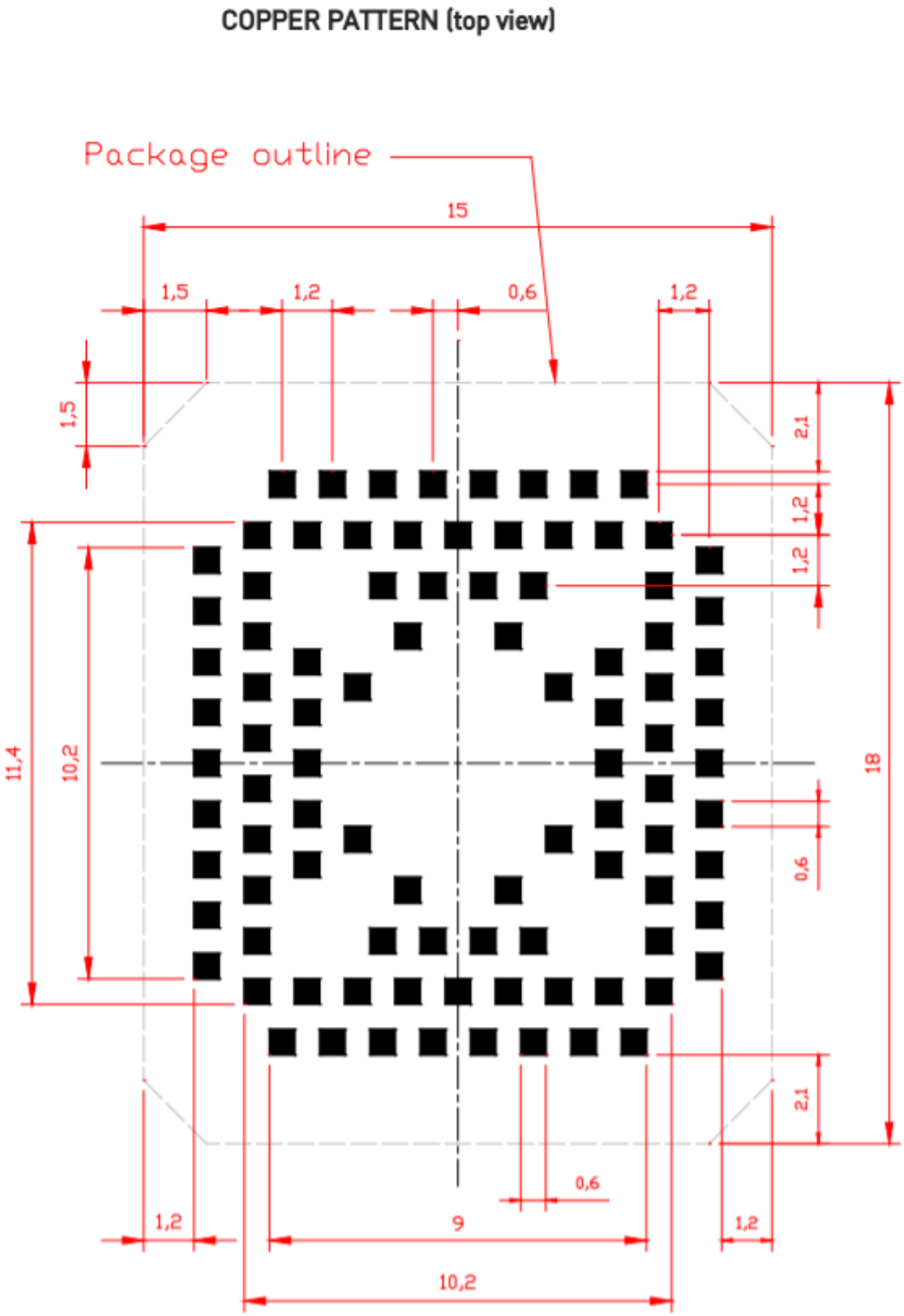

Figure 14: LE310Q1-EU, LE310Q1-SN, and LE310Q1-WW Copper Pattern (top view)

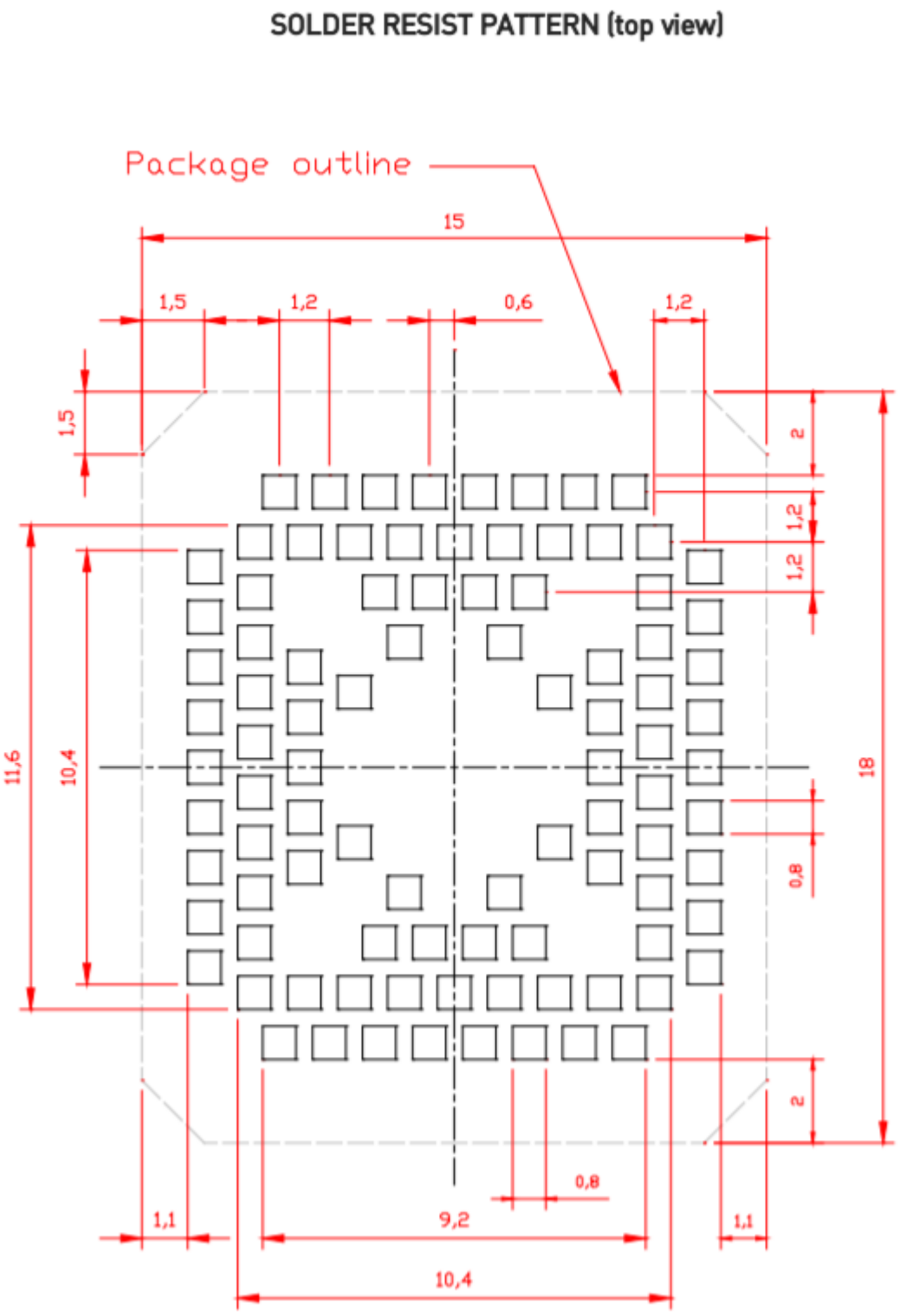

Figure 15: LE310Q1-EU, LE310Q1-SN, and LE310Q1-WW Solder resist pattern (top view)

9.2 Recommendations for LE310Q1-EU, LE310Q1-SN, and LE310Q1-WW

To easily rework the LE310Q1-EU, LE310Q1-SN, and LE310Q1-WW, it is recommended to consider on the application a 2mm placement inhibit area around the module.

It is also suggested, as a common rule for an SMT component, to avoid a mechanical part of the application being in direct contact with the module.

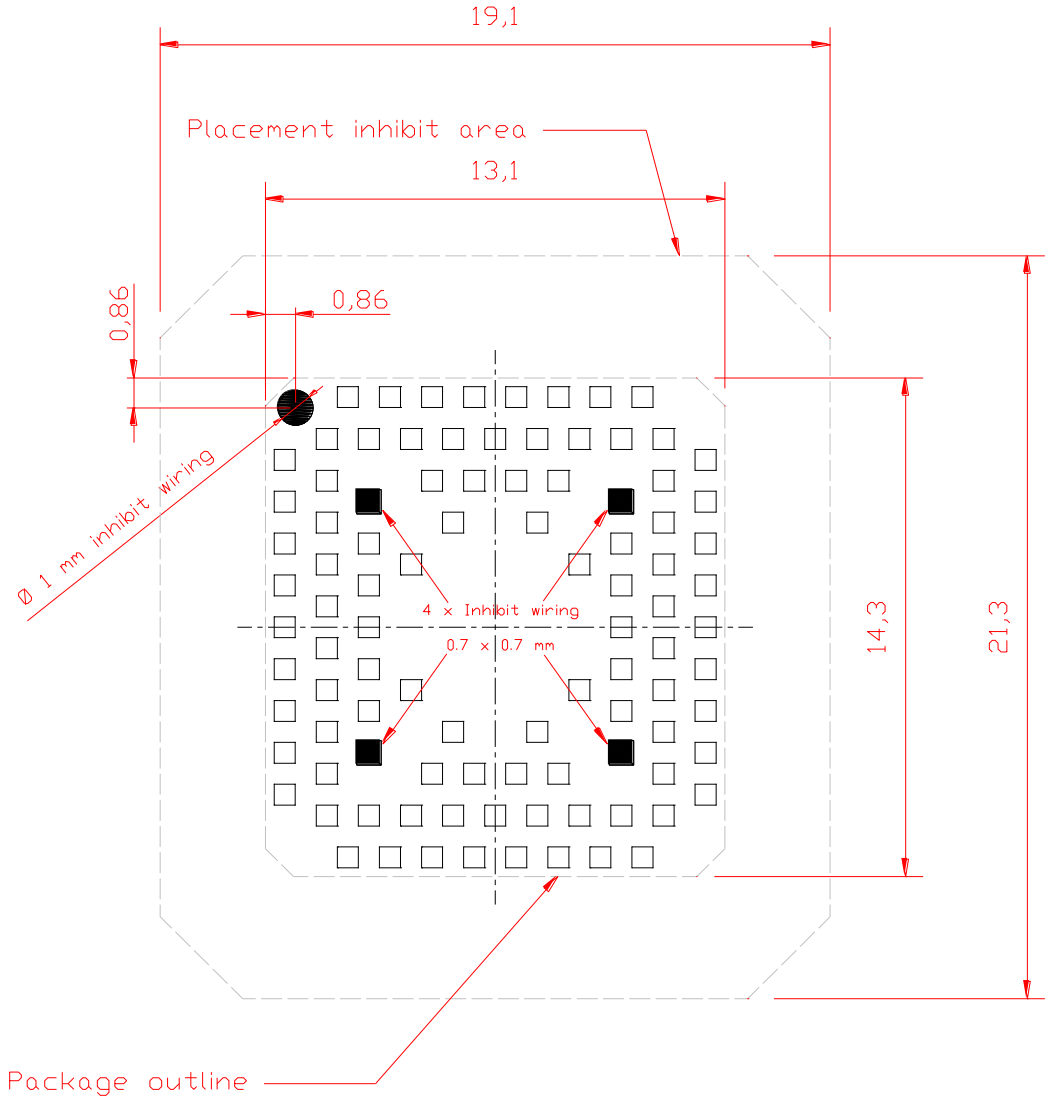

Figure 16: Inhibit area around the module

Note: In the customer application, the region under WIRING must be clear from signal or ground paths.

9.3 PCB Pad Design

Non-solder mask defined (NSMD) type is recommended for the solder pads on the PCB.

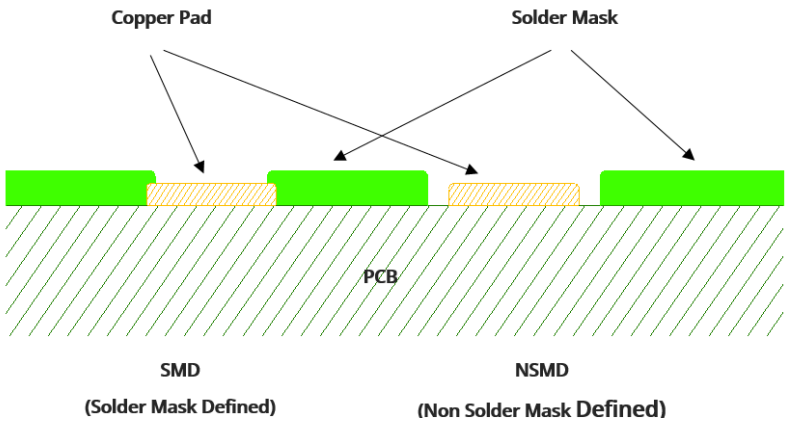

Figure 17: PCB Solder Pad Recommendations

9.4 Recommendations for PCB Pad Dimensions

The recommendation for the PCB pad dimensions is 1:1 with module pads.

It is not recommended to place via or micro-via not covered by the solder resist in an area of 0.3 mm around the pads unless it carries the same signal as the pad itself.

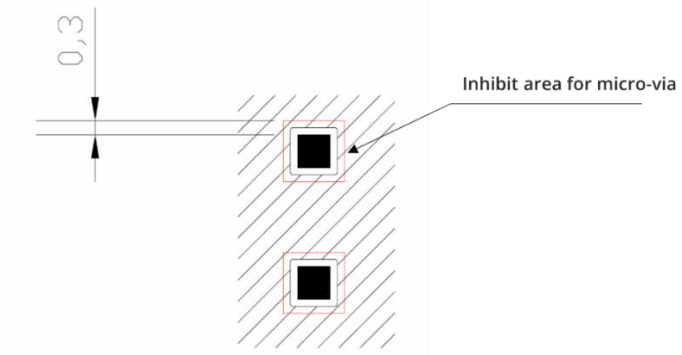

Figure 18: Pad Dimensions Recommendations

Holes in the pad are allowed only for blind holes and not for through holes.

Recommendations for PCB pad surfaces:

Table 38: Recommendations for PCB pad surfaces

Finish	Layer Thickness(um)	Properties
Electro-less Ni / Immersion Au	3 –7 / 0.03 – 0.15	Good solder ability protection, high shear force values.

The PCB must be able to resist the higher temperatures which are occurring during the lead-free process. This issue should be discussed with the PCB supplier. In general, the wettability of tin-lead solder paste on the described surface plating is better than the lead-free solder paste.

It is not necessary to panel the application's PCB, however in that case it is recommended to use milled contours and perforated breakaway tabs; scoring or v-cut solutions are not recommended.

9.5 Stencil

The layout of the stencil apertures can be the same as the recommended footprint (1:1), we suggest a thickness of stencil foil ≥ 120 µm.

9.6 Solder Paste

Table 39: Solder Paste

Item	Lead-Free
Solder Paste	Sn/Ag/Cu

It is recommended to use only "no clean" solder paste to avoid the cleaning of the modules after assembly.

9.7 Solder Reflow

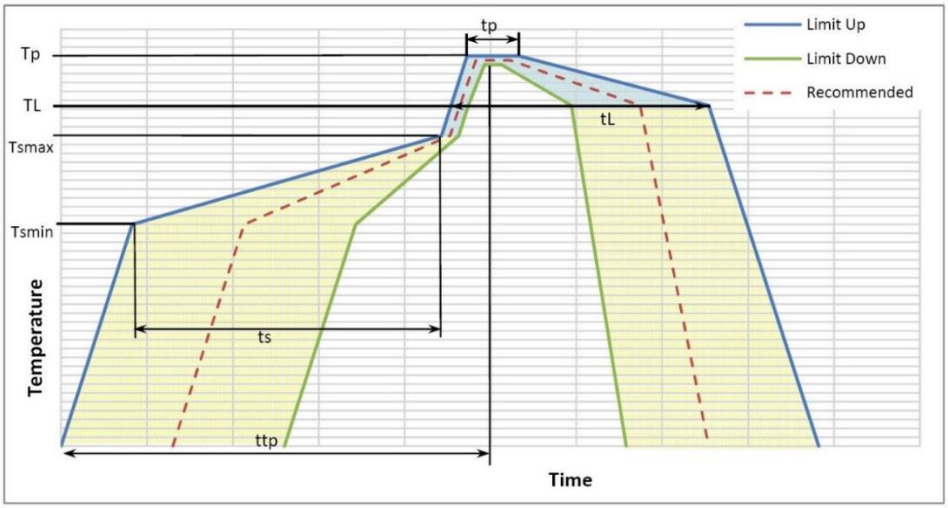

Figure 19: Recommended Solder Reflow Profile

Warning: The aforementioned solder reflow profile represents the typical SAC reflow limits and does not guarantee adequate adherence of the module to the customer application throughout the temperature range. The user must optimize the reflow profile based on the overall system considering factors such as thermal mass and warpage.

Table 40: Profile Feature Recommendations

Profile Feature	Pb-Free Assembly Free
Average ramp-up rate (T_L to T_P)	3°C/second max
Preheat • Temperature Min (Tsmin) • Temperature Max (Tsmax) • Time (min to max) (ts)	150°C 200°C 60-180 seconds
Tsmax to TL • Ramp-up Rate	3°C/second max

Profile Feature	Pb-Free Assembly Free
Time maintained above: • Temperature (TL) • Time (tL)	217°C 60-150 seconds
Peak Temperature (Tp)	245 +0/-5°C
Time within 5°C of actual Peak Temperature (tp)	10-30 seconds
Ramp-down Rate	6°C/second max
Time 25°C to Peak Temperature	8 minutes max

Note: All temperatures refer to the topside of the package, measured on the package body surface.

Warning: THE LE310Q1 MODULES WITHSTANDS ONE REFLOW PROCESS ONLY. Make sure that in a double-side assembly process the module side will be the latter to be soldered.

Warning: The aforementioned solder reflow profile represents the typical SAC reflow limits and does not guarantee adequate adherence of the module to the customer application throughout the temperature range. The user must optimize the reflow profile depending on the overall system, considering factors such as thermal mass and warpage.

10 Packaging

10.1 Tray

10.1.1 LE310Q1-EU, LE310Q1-SN, and LE310Q1-WW

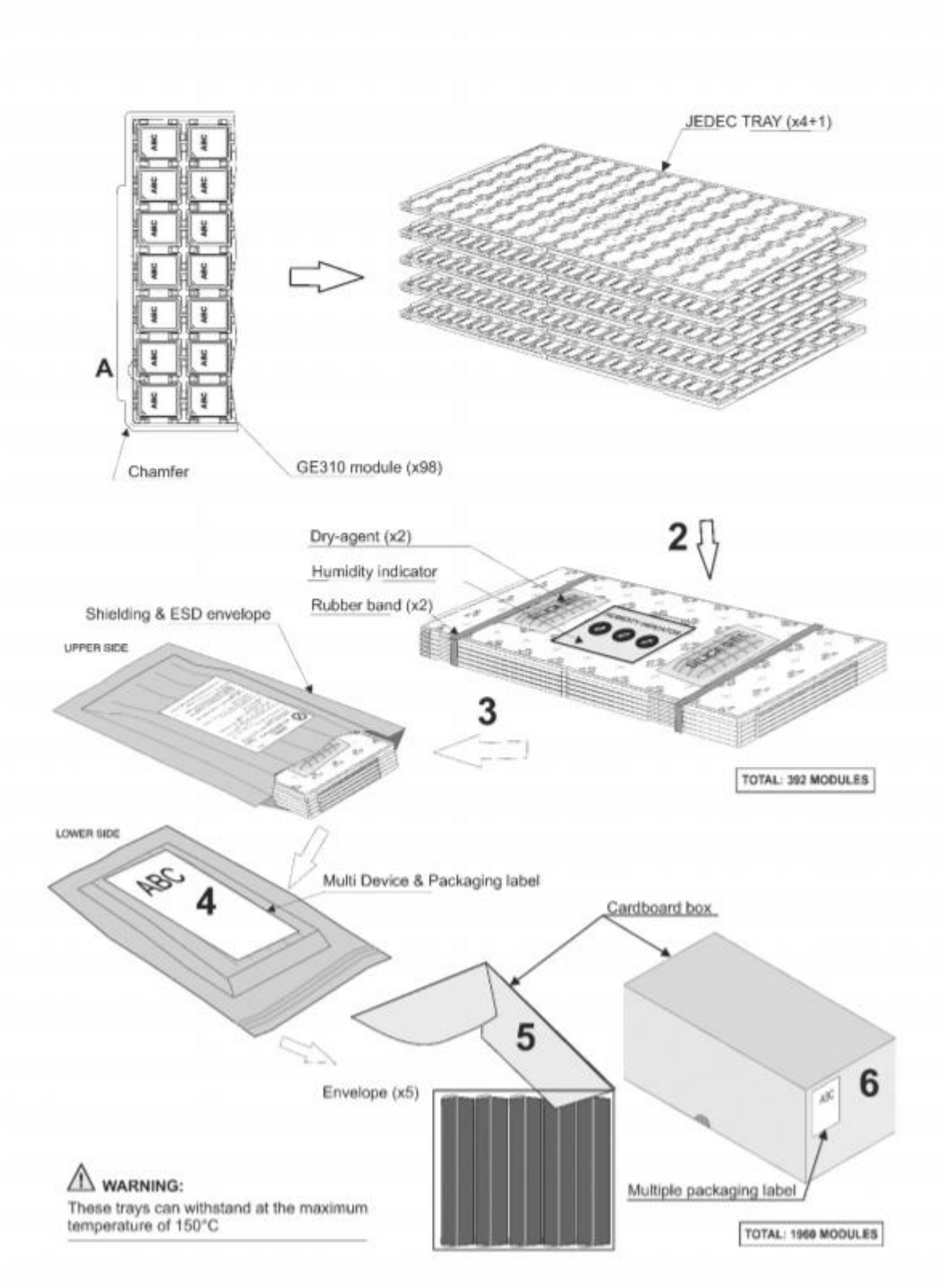

Figure 20: LE310Q1-EU, LE310Q1-SN, and LE310Q1-WW Tray Packaging

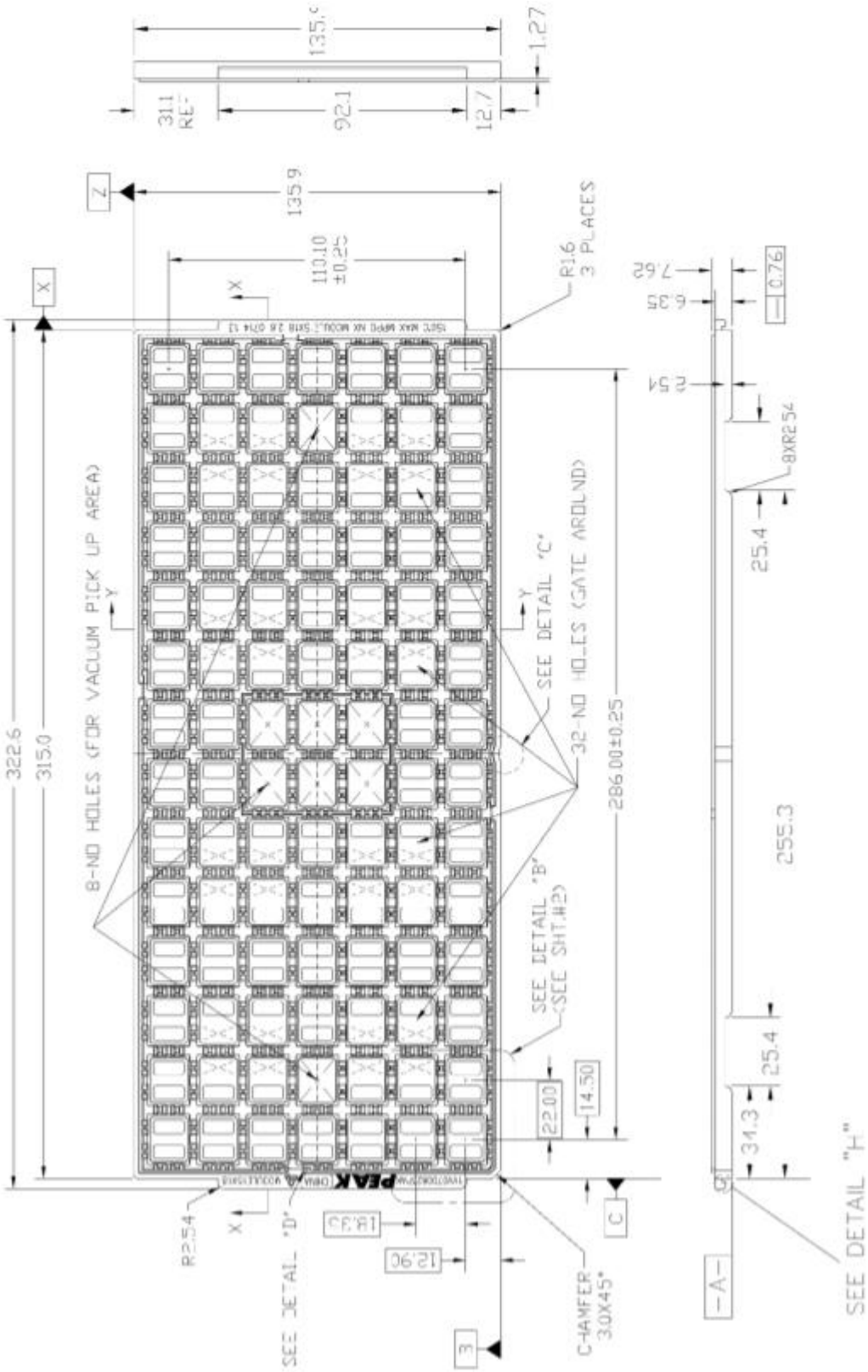

Figure 21: LE310Q1-EU, LE310Q1-SN, and LE310Q1-WW Tray Dimensions

10.2 Reel

10.2.1 LE310Q1-EU, LE310Q1-SN, and LE310Q1-WW

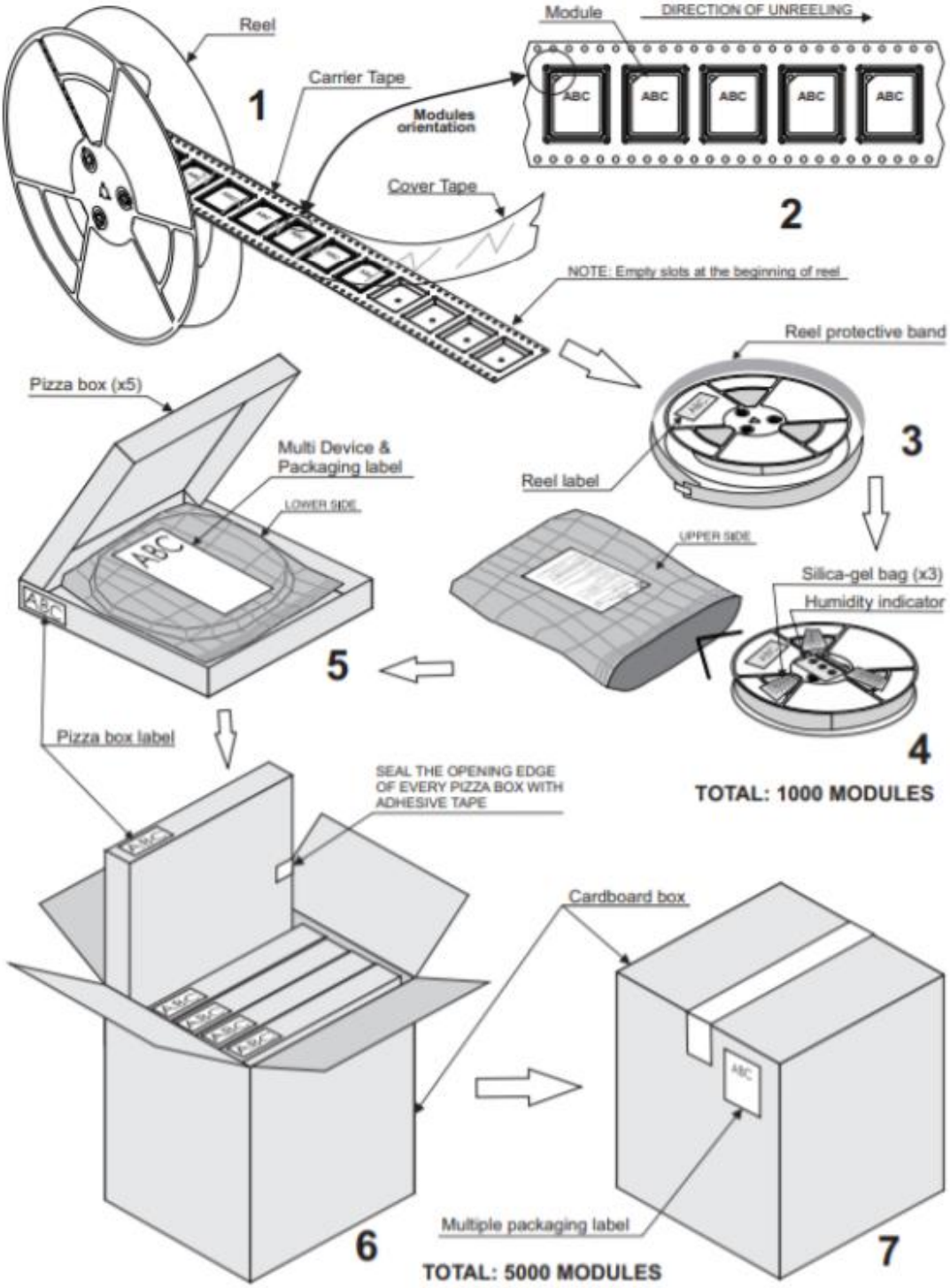

Figure 22: LE310Q1-EU, LE310Q1-SN, and LE310Q1-WW Module Positioning into the Carrier

10.3 Moisture Sensitivity

The LE310Q1 is a Moisture Sensitive Device level 3, according to standard IPC/JEDEC J-STD-020, and takes care of all the relative requirements for using this kind of component.

Moreover, the customer has to take care of the following conditions:

a Calculated shelf life in sealed bag: 12 months at <40°C and <90% relative humidity (RH).

b An environmental condition during the production: 30°C / 60% RH according to IPC/JEDEC J STD-033A paragraph 5.

c The maximum time between the opening of the sealed bag and the reflow process must be 168 hours if condition b) "IPC/JEDEC J-STD-033D paragraph 5.2" is respected.

d Baking is required if conditions b) or c) are not respected.

e Baking is required if the humidity indicator inside the bag indicates 10% RH or more.

11 Conformity Assessment Issues

11.1 Approvals Summary

Table 41: EMEA Approvals summary

Region	EMEA	
Country & Type Approval	EU RED	UK UKCA
LE310Q1-WW	●	●
LE310Q1-EU	●	●

Table 42: Americas Approvals summary

Region	Americas		
Country & Type Approval	US FCC	CA ISED	BR ANATEL
LE310Q1-WW	●	●	

Table 43: APAC Approvals summary

Region	APAC					
Country & Type Approval	JAP JRF / JTBL	CH CCC	KOREA KCC	AUS RCM	SG IMDA	TW NCC
LE310Q1-WW				●		

●	The equipment is compliant
●	Type approval is in progress
	The equipment is not compliant

Note: For approvals not included in the above, please contact Telit support.

11.2 EMEA Approvals

11.2.1 EU RED

11.2.1.1 EU Declaration of Conformity

In accordance with the above Approval Compliance Summary table, where applicable (green dots), hereby, Telit Communications S.p.A declares that the equipment is in compliance with the Directive 2014/53/EU.

The full text of the EU declaration of conformity is available at the following internet address: https://www.telit.com/red

Text of 2014/53/EU Directive (RED) requirements can be found here:

https://eur-lex.europa.eu/legal-content/EN/TXT/?uri=CELEX:32014L0053

11.2.1.2 RED Antennas

This radio transmitter has been approved under RED to operate with the antenna types listed below with the maximum permissible gain indicated. The usage of a different antenna in the final hosting device may need a new assessment of host conformity to RED.

Table 44: RED Antenna Type

Model	Antenna Type
LE310Q1-WW LE310Q1-EU	External Smarteq MiniMag 1140.24 Antenna Gain: B1/B3/B7/B34/B38/B40/B41 2.17 dBi, B8/B20 5.17dBi, B28 3.17dBi

Table 45: Max Gain for RED

Max Gain for RED (dBi)		
Band	LE310Q1-WW	LE310Q1-EU
B1	11.85	11.85
B3	11.35	11.35
B5 (*)	8.18	8.18
B7	11.96	11.96
B8	8.46	8.46
B20	8.23	8.23
B28	7.49	7.49
B34	11.96	11.96
B38	11.96	11.96
B40	11.96	11.96
B41	11.96	11.96

(*) B5 is not used in Europe but this data can be used in countries where European standards are adopted

11.2.2 UK UKCA

11.2.2.1 UKCA Declaration of Conformity

In accordance with the above Approval Compliance Summary table, where applicable (green ball), hereby, Telit Communications S.p.A declares that the equipment is in compliance with the Radio Equipment Regulations 2017 for UKCA.

The full text of the UKCA declaration of conformity is available at the following internet address: https://www.telit.com/ukca

The UKCA requirements can be found here:

https://www.gov.uk/guidance/using-the-ukca-marking

11.2.2.2 RED/UKCA Antennas

This radio transmitter has been approved under UKCA to operate with the antenna types listed below with the maximum permissible gain indicated. The usage of a different antenna in the final hosting device may need a new assessment of host conformity to UKCA.

Table 46: UKCA Antenna Type

Model	Antenna Type
LE310Q1-WW LE310Q1-WWG	External Smarteq MiniMag 1140.24 Antenna Gain: B1/B3/B7/B34/B38/B40/B41 2.17 dBi, B8/B20 5.17dBi, B28 3.17dBi

Table 47: Max Gain for UKCA

Max Gain for RED (dBi)		
Band	LE310Q1-WW	LE310Q1-EU
B1	11.85	11.85
B3	11.35	11.35
B5 (*)	8.18	8.18
B7	11.96	11.96
B8	8.46	8.46
B20	8.23	8.23
B28	7.49	7.49
B34	11.96	11.96
B38	11.96	11.96
B40	11.96	11.96
B41	11.96	11.96

(*) B5 is not used in Europe but this data can be used in countries where European standards are adopted

11.3 Americas Approvals

11.3.1 USA FCC

11.3.1.1 FCC Certificates

The FCC Grants can be found here: https://www.fcc.gov/oet/ea/fccid

11.3.1.2 Applicable FCC Rules

Table 48: Applicable FCC rules

Model	Applicable FCC Rules
LE310Q1-WW	47 CFR: - Part 2, 22, 24, 27, 90

11.3.1.3 FCC Regulatory Notices

This module is intended for OEM integrators only. Per FCC KDB 996369 D03 OEM Manual, the following conditions must be strictly followed when using this certified module.

Modification statement

Telit has not approved any changes or modifications to this device by the user.

FCC Caution: Any changes or modifications not expressly approved by the party responsible for compliance could void the user's authority to operate this equipment.

Interference statement

This device complies with Part 15 of the FCC Rules. Operation is subject to the following two conditions:

(1) this device may not cause interference, and

(2) this device must accept any interference, including interference that may cause undesired operation of the device.

RF exposure considerations

This equipment complies with FCC mobile radiation exposure limits set forth for an uncontrolled environment. This equipment should be installed and operated with a minimum distance of 20cm between the radiator and your body. If the module is installed in a portable host, a separate SAR evaluation is required to confirm compliance with relevant FCC portable RF exposure rules.

FCC Class B digital device notice

This equipment has been tested and found to comply with the limits for a Class B digital device, pursuant to part 15 of the FCC Rules. These limits are designed to provide reasonable protection against harmful interference in a residential installation. This equipment generates, uses and can radiate radio frequency energy and, if not installed and used in accordance with the instructions, may cause harmful interference to radio communications. However, there is no guarantee that interference will not occur in a particular installation. If this equipment does cause harmful interference to radio or television reception, which can be determined by turning the equipment off and on, the user is encouraged to try to correct the interference by taking one or more of the following measures:

- Reorient or relocate the receiving antenna.
- Increase the separation between the equipment and receiver.
- Connect the equipment into an outlet on a circuit different from that to which the receiver is connected.
- Consult the dealer or an experienced radio/TV technician for help.

Information for the OEMs and Integrators

1. This device is intended for OEM integrators only.
2. Please see the full Grant of Equipment document for other restrictions.

OEM/Host manufacturers are ultimately responsible for the compliance of the Host and Module. The final product must be reassessed against all the essential requirements of the FCC rule such as FCC Part 15 Subpart B before it can be placed on the US market. This includes reassessing the transmitter module for compliance with the Radio and EMF essential requirements of the FCC rules. This module must not be incorporated into any other device or system without retesting for compliance as multi-radio and combined equipment.

The final host product must comply with the requirements specified in §15.203, §15.204(b) and §15.204(c).

Manual Information to the End User

The OEM integrator should be aware not to provide information to the end user on how to install or remove this RF module in the user's manual of the end product which integrates this module. The end user manual shall include all required regulatory information/warming as shown in this manual

Information on test modes and additional testing requirement

The module is tested for standalone mobile RF exposure use condition. Any other usage conditions such as co-location with other transmitter(s) or being used in a portable condition will need a separate reassessment through a class II permissive change application or new certification.

If this module is intended for use in a portable device, you are responsible for separate approval to satisfy the SAR requirements of FCC Part 2.1093.

Limited module procedures

Not applicable.

Trace antenna designs

Please, refer to Section 7 of this document for antenna connector trace layout design and to the Gerber files attached to this document. Note that only the unique antenna connectors as indicated in this manual can be used for all transmitter ports.

Any deviation(s) from the defined parameters of the trace layout to antenna connector(s), as described by the instructions, require that the host product manufacturer must notify the module grantee that they wish to change the antenna trace design. In this case, a Class II permissive change application is required to be filed by the grantee, or the host

manufacturer can take responsibility through the change in FCC ID (new application) procedure followed by a Class II permissive change application.

Unique antenna connector

For situations where the host product manufacturer is responsible for an external connector, for example with an RF pin and antenna trace design, the integration instructions shall inform the installer that unique antenna connector must be used on the Part 15 authorized transmitters used in the host product. The module manufacturers shall provide a list of acceptable unique connectors.

Additional testing, Part 15 Subpart B disclaimer

The modular transmitter is only authorized by the FCC for the specific rule parts (for example, FCC transmitter rules) listed on the grant, and that the host product manufacturer is responsible for compliance to any other FCC rules that apply to the host not covered by the modular transmitter grant of certification.

This transmitter module is tested as a subsystem and its certification does not cover the FCC Part 15 Subpart B (unintentional radiator) rule requirement applicable to the final host. The final host will still need to be reassessed for compliance to this portion of rule requirements if applicable.

As long as all conditions above are met, further transmitter test will not be required. However, the OEM integrator is still responsible for testing their end-product for any additional compliance requirements required with this module installed.

IMPORTANT NOTE:

In the event that these conditions can not be met (for example certain laptop configurations or co-location with another transmitter), then the FCC authorization is no longer considered valid and the FCC ID can not be used on the final product. In these circumstances, the OEM integrator will be responsible for re-evaluating the end product (including the transmitter) and obtaining a separate FCC authorization.

EMI Considerations

Please follow the guidance provided for host manufacturers in KDB publications 996369 D02 and D04.

How to make changes

Only Grantees are permitted to make permissive changes. Please contact us should the host integrator expect the module to be used differently than as granted:

Grantee code: RI7

Grantee name: Telit Communications S.p.A.

Mailing address: Viale Stazione di Prosecco 5/b, 34010 Sgonico – Trieste, Italy

Website: https://www.telit.com/

Support contact: TS-EMEA@telit.com

11.3.1.4 FCC Antenna Info

This radio transmitter has been approved by FCC to operate with the antenna types listed below with the maximum permissible gain indicated. Antennas of the same type with equal or lower gain may also be used with this module. Antennas having a gain greater than the maximum gain indicated for that type, are strictly prohibited for use with this device. The antenna must be installed such that 20 cm can be maintained between the antenna and users.

This radio module is sold without a specific antenna. Detailed electrical characteristics of the usable antenna are shown in Chapter 7

Table 49: FCC Antenna Type

Model	Antenna Type
LE310Q1-WW	External Smarteq MiniMag 1140.24 Max Antenna Gain: 617-803MHz 3.17dBi, 824-960MHz 5.17 dBi, 1710-2500 2.17dBi

Table 50: Max Gain for FCC (dBi)

Max Gain for FCC (dBi)		
Band	LE310Q1-WW	LE310Q1-SN
FDD 2	8.00	8.00
FDD 4	5.00	5.00
FDD 5	9.41	9.41
FDD 7	8.00	NA
FDD 8	9.78	NA
FDD 12	8.70	8.70
FDD 13	9.16	9.16
FDD 14	9.23	9.23
FDD 25	8.00	8.00
FDD 26	9.36 / 9.41	NA
FDD 66	5.00	5.00
FDD 38	8.00	NA
FDD 41	8.00	NA
FDD 71	8.48	8.48

11.3.1.5 FCC Labelling Requirements for the Host Device

The host device shall be properly labelled to identify the modules within the host device. The certification label of the module shall be clearly visible at all times when installed in the host device, otherwise the host device must be labelled to display the FCC ID of the module, preceded by the words "Contains transmitter module", or the word "Contains", or similar wording expressing the same meaning, as in the below table.

Table 51:Host device FCC label

Model	FCC ID
LE310Q1-WW	Contains FCC ID: RI7LE310Q1WW
LE310Q1-SN	Contains FCC ID: RI7LE310Q1SN

11.3.2 Canada ISED

11.3.2.1 ISED Database

The product ISED certified can be found here

Le certificat ISDE est disponible ici:

https://sms-sgs.ic.gc.ca/equipmentSearch/searchRadioEquipments?execution=e1s1&lang=en

Table 52: Applicable ISED rules

Model Modèle	Applicable ISED Rules Règles ISDE applicables
LE310Q1-WW LE930Q1-SN	RSS-130 Issue 2, RSS-132 Issue 4, RSS-133 Issue 7, RSS-139 Issue 4, RSS-140 Issue 1, RSS-199 Issue 4; RSS-Gen Issue 5

11.3.2.2 ISED Regulatory Notices

Modification Statement / *Déclaration de modification*

Telit has not approved any changes or modifications to this device by the user. Any changes or modifications could void the user's authority to operate the equipment.

Telit n'approuve aucune modification apportée à l'appareil par l'utilisateur, quelle qu'en soit la nature. Tout changement ou modification peuvent annuler le droit d'utilisation de l'appareil par l'utilisateur.

Information for the OEMs and Integrators / *Informations pour les OEM et les intégrateurs*

This device is intended only for OEM integrators under the following conditions: (For module device use)

1) The antenna must be installed and operated with greater than 20cm between the antenna and users, and

2) The transmitter module may not be co-located with any other transmitter or antenna.

As long as 2 conditions above are met, further transmitter test will not be required. However, the OEM integrator is still responsible for testing their end-product for any additional compliance requirements required with this module installed.

Cet appareil est conçu uniquement pour les intégrateurs OEM dans les conditions suivantes: (Pour utilisation de dispositif module)
1) L'antenne doit être installé et exploité avec plus de 20 cm entre l'antenne et les utilisateurs, et (if EUT is portable device, please delete this item)
2) Le module émetteur peut ne pas être coïmplanté avec un autre émetteur ou antenne.
Tant que les 2 conditions ci-dessus sont remplies, des essais supplémentaires sur l'émetteur ne seront pas nécessaires. Toutefois, l'intégrateur OEM est toujours responsable des essais sur son produit final pour toutes exigences de conformité supplémentaires requis pour ce module installé.

Interference Statement ***/ Déclaration d'interférence***

This device complies with Industry Canada licence-exempt RSS standard(s). Operation is subject to the following two conditions: (1) this device may not cause interference, and (2) this device must accept any interference, including interference that may cause undesired operation of the device.

Le présent appareil est conforme aux applicables RSS standards d'Industrie Canada. L'exploitation est autorisée aux deux conditions suivantes : (1) l'appareil ne doit pas produire de brouillage, et (2) l'utilisateur de l'appareil doit accepter tout brouillage radioélectrique subi, même si le brouillage est susceptible d'en compromettre le fonctionnement.

Radio Exposure Notice ***/ Avis d'exposition radio***

This device complies with ISED radiation exposure limits set forth for an uncontrolled environment and meets the RSS-102 of the ISED radio frequency (RF) Exposure rules. Antenna gain must be less than the values reported in the following chapter.

Le présent appareil est conforme à l'exposition aux radiations FCC / ISED définies pour un environnement non contrôlé et répond aux directives d'exposition de la fréquence de la FCC radiofréquence (RF) et RSS-102 de la fréquence radio (RF) ISED règles d'exposition. Le gain de l'antenne doit être inférieur aux valeurs reportées dans le chapitre suivant.

11.3.2.3 ISED Antenna Info */ Informations sur l'antenne d'ISDE*

This radio transmitter has been approved by ISED to operate with the antenna types listed below with the maximum permissible gain indicated. Antenna types not included in this list, having a gain greater than the maximum gain indicated for that type, are strictly prohibited for use with this device. This transmitter module is authorized only for use in device where the antenna may be installed and operated with greater than 20cm between the antenna and users.

Le présent émetteur radio a été approuvé par ISDE pour fonctionner avec les types d'antenne énumérés ci-dessous et ayant un gain admissible maximal. Les types d'antenne non inclus dans cette liste, et dont le gain est supérieur au gain maximal indiqué, sont strictement interdits pour l'exploitation de l'émetteur. Ce module émetteur est autorisé uniquement pour une utilisation dans un appareil où l'antenne peut être installée et utilisée à plus de 20 cm entre l'antenne et les utilisateurs.

This radio module is sold without a specific antenna. Detailed electrical characteristics of the usable antenna are shown in Chapter 8.

Ce module radio est vendu sans antenne spécifique. Les caractéristiques électriques détaillées de l'antenne utilisable sont présentées au chapitre 8.

Table 53: ISED Antenna Type/ISDE Type d'antenne

Model Modèle	Antenna Type Type d'Antenne
LE310Q1-WW	Smarteq MiniMag 1140.24

LE310S1-SN	Max Antenna Gain: 617-803MHz 3.17dBi, 824-960MHz 5.17 dBi, 1710-2500 2.17dBi

Table 54: Gain maximum for ISED (dBi) / *Gain maximum pour ISDE (dBi)*

Max Gain for ISED (dBi) /		
Band	LE310Q1-WW	LE310Q1-SN
FDD 2	8.00	8.00
FDD 4	5.00	5.00
FDD 5	6.12	6.12
FDD 7	9.41	NA
FDD 12	5.63	5.63
FDD 13	5.95	5.95
FDD 14	5.99	5.99
FDD 25	8.00	8.00
FDD 26	6.12	NA
FDD 66	5.00	5.00
FDD 38	8.00	NA
FDD 41	8.00	NA
FDD 71	5.48	5.48

This transmitter must not be co-located or operating in conjunction with any other antenna or transmitter.

L'émetteur ne doit pas être colocalisé ni fonctionner conjointement avec à autre antenne ou autre émetteur.

This equipment must be installed and operated in accordance with provided instructions and the antenna(s) used for this transmitter must be installed to provide a separation distance of at least 20 cm from all persons and must not be co-located or operating in conjunction with any other antenna or transmitter. End-users and installers must be provided with antenna installation instructions and consider removing the no-collocation statement.

Cet équipement doit être installé et utilisé conformément aux instructions fournies et la ou les antennes utilisées pour cet émetteur doivent être installées pour fournir une distance de séparation d'au moins 20 cm de toutes les personnes et ne doivent pas être co-localisées ou fonctionner en conjonction avec toute autre antenne ou émetteur. Les utilisateurs finaux et les installateurs doivent recevoir les instructions d'installation de l'antenne et envisager de supprimer la déclaration de non-collocation.

Information on test modes and additional testing requirement / *Informations sur les modes de test et exigences de test supplémentaires*

The module has been evaluated in mobile stand-alone conditions. For operational conditions other than a stand-alone modular transmitter in a host (multiple, simultaneously transmitting modules or other transmitters in a host), additional testing may be required (collocation, retesting...) If this module is intended for use in a portable device, you are responsible for separate approval to satisfy the SAR requirements IC RSS-102.

Le module a été évalué dans des conditions mobiles autonomes. Pour des conditions de fonctionnement autres qu'un émetteur modulaire autonome dans un hôte (plusieurs modules transmettant simultanément ou d'autres émetteurs dans un hôte), des tests supplémentaires peuvent être nécessaires (colocalisation, retest...) Si ce module est destiné à être utilisé dans un appareil portable , vous êtes responsable de l'approbation séparée pour satisfaire aux exigences SAR IC RSS-102.

Trace antenna designs

See Chapter 7 on Antenna - PCB Line Guidelines

11.3.2.4 Voir le chapitre 7 sur l'antenne - *Directives de ligne PCB*

11.3.2.5 ISED Label and compliance information */ ISDE Étiquette et informations de conformité*

Labelling requirements for the host device */ Exigences d'étiquetage pour le périphérique hôte*

The host product shall be properly labelled to identify the modules within the host product.

The ISED certification label of a module shall be clearly visible at all times when installed in the host product; otherwise, the host product must be labelled to display the ISED certification number for the module, preceded by the word "contains" or similar wording expressing the same meaning, as follows:

Contains IC: XXXXXX-YYYYYYYYYY

In this case, XXXXXX-YYYYYYYYYY is the module's certification number.

Le produit hôte devra être correctement étiqueté, de façon à permettre l'identification des modules qui s'y trouvent.
L'étiquette d'homologation d'un module d'ISDE devra être apposée sur le produit hôte à un endroit bien en vue, en tout temps. En l'absence d'étiquette, le produit hôte doit porter une étiquette sur laquelle figure le numéro d'homologation du module d'ISDE, précédé du mot « contient », ou d'une formulation similaire allant dans le même sens et qui va comme suit :
Contient IC : XXXXXX-YYYYYYYYYY
Dans ce cas, XXXXXX-YYYYYYYYYY est le numéro d'homologation du module.

Table 55: Host device IC label / Ètiquette IC du dispositif hôte

Model HVIN	Host device IC label Ètiquette IC du dispositif hôte
LE310Q1-WW	Contains IC: 5131A-LE310Q1WW
LE310Q1-SN	Contains IC: 5131A-LE310Q1SN

CAN ICES-3 (B) / NMB-3 (B)

This Class B digital apparatus complies with Canadian ICES-003.

Cet appareil numérique de classe B est conforme à la norme canadienne ICES-003.

11.4 APAC Approvals

11.4.1 Australian RCM

11.4.1.1 RCM Regulatory Notices

In accordance with the above Approval Compliance Summary table, where applicable (green ball), hereby, Telit Communications S.p.A declares that the equipment is in compliance with Regulatory Compliance Mark (RCM) of Australia.

Module integration note

Manufacturers and suppliers of end-products that use a cellular modem cannot rely on module compliance alone. It is necessary to re-test at least the ETSI EN 301 908-1 radiated spurious emission within the context of the final end-product to ensure compliance with AS/CA S042. This testing will capture the impact of possible higher gain antenna and other changes introduced by the integration.

Warning: The equipment listed may not work when main power fails.

12 Acronyms and Abbreviations

Table 56: Acronyms and Abbreviations

Acronym	Definition
ADC	Analog – Digital Converter
CLK	Clock
CMOS	Complementary Metal – Oxide Semiconductor
CS	Chip Select
DAC	Digital – Analog Converter
DTE	Data Terminal Equipment
ESR	Equivalent Series Resistance
EMI	Electromagnetic Interference
GPIO	General Purpose Input Output
HS	High Speed
I/O	Input Output
MISO	Master Input – Slave Output
MOSI	Master Output – Slave Input
PCB	Printed Circuit Board
PDN	Power Distribution Network
PSM	Power Saving Mode according to 3GPP Rel.12
PTCRB	PCS Type Certification Review Board
RTC	Real-Time Clock
SIM	Subscriber Identification Module
SPI	Serial Peripheral Interface
UART	Universal Asynchronous Receiver Transmitter
USB	Universal Serial Bus
VSWR	Voltage Standing Wave Radio

13 Related Documents

For current documentation and downloads, refer to https://dz.telit.com/.

Table 57: Related Documents

S.no	Doc Code	Document Title
1	80798ST11194A	ELS63, LE910Q1 and LE310Q1 AT Commands Reference Guide

14 Document History

Table 58: Document History

Revision	Date	Changes
2	2026-03-27	The following sections are updated: • Table 8: VAON Power Domain • Table 15: LE310Q1-EU Connected Mode • Section 6.3: Power On • Section 6.3: Power Off • Table 25: GPIO • Section 6.6: ADC Converter • Section 6.7: SIM card Interface • Section 7.2.3: LE310Q1-EU RX Sensitivity • Section 11.2.1.2 RED Antennas
1	2025-12-19	The following sections are updated: • Section 3.5.2: Module weight • Section 3.6: Temperature Range • Section 4.1: table 5 pinout table and pin details • Section 5.2: table 12, 13, 14 power consumption • Section 5.3.2: Thermal Design Guidelines • Section 5.5: PWRMON Power-on Monitor • Section 6.2.1: Module Power On • Section 6.4: communication Ports • Section 6.5: General Purpose I/O , table 25 GPIO • Section 6.6: ADC Converter • Section 6.7: SIM card Interface • Section 7.2: RX Sensitivity The following sections are newly added: • Section 4.3: table 6, 7, 8,9,10 Power Domain - Electrical Characteristics • Section 5.3.1: Electrical Design Guidelines • Section 5.6: VDD_IO • Section 6.1.2: SIM Voltage Pads • Section 6.2.2: Wake-up • Section 6.3.3: Fast Power Down • Section 11: Conformity Assessment
0	2025-06-04	Initial release

From Mod.0818 Rev.18

© Telit Cinterion. All rights reserved.

Technical Documentation