LE310Q1 Power Saving

Application Note

80848NT12270A Rev.0
2026-02-19
Released
Confidential

Technical Documentation

Contents

1 Applicability Table 3
2 Introduction 4
2.1 Scope 4
2.2 Audience 4
2.3 Contact Information, Support 4
2.4 Conventions 5
2.5 Terms and Conditions 5
2.6 Disclaimer 5
3 Power Measurement Setup Preparation 6
3.1 Power Consumption Setup 6
3.2 EVB/TLB configurations 8
3.2.1 EVB 8
3.2.2 TLB 8
3.2.2.1 Jumper configuration 8
3.2.2.2 Power connections 9
3.3 Wake up PIN 10
4 Measurements Description 11
4.1 IDLE state, full power measurement 11
4.1.1 Steps and AT commands 11
4.2 IDLE state, low power measurement 12
4.2.1 CFUN=5 - Steps and AT commands 12
4.3 Power Saving Mode (PSM) 15
4.3.1 LE310Q1 PSM 16
4.3.2 Steps and AT commands 17
4.4 Extended Discontinuous Reception (eDRX) 18
4.4.1.1 Default configuration 20
4.4.1.2 Steps and AT commands 20
4.4.2 AT+CFUN=5 in combination with eDRX 21
4.4.3 AT+CFUN=9 in combination with eDRX 22
5 Acronyms and Abbreviations 24
6 Document History 25

1 Applicability Table

Table 1: Applicability Table

Products
LE310Q1

2 Introduction

2.1 Scope

The aim of this document is to describe power states of LE310Q1 based variants, consumption measurements and highlight basic steps to reproduce them in a test lab environment.

All the features and solutions described in this document apply to all LE310Q1variants listed in the applicability table.

This document cannot include every hardware solution or every product that can be designed. Where the suggested hardware configurations are not to be considered mandatory, the information provided should be used as a guide and starting point for the proper development of the product with the Telit module.

2.2 Audience

This document is intended for system integrators that are using the Telit LE310Q1 module in their products.

2.3 Contact Information, Support

For technical support and general questions, e-mail:

- TS-EMEA@telit.com
- TS-AMERICAS@telit.com
- TS-APAC@telit.com
- TS-SRD@telit.com
- TS-ONEEDGE@telit.com

Alternatively, use: https://www.telit.com/contact-us/

For Product information and technical documents, visit: https://www.telit.com

2.4 Conventions

Note:	Provides advice and suggestions that may be useful when integrating the module.
Danger:	This information MUST be followed, or catastrophic equipment failure or personal injury may occur.
Warning:	Alerts the user on important steps about the module integration.

All dates are in ISO 8601 format, that is YYYY-MM-DD.

2.5 Terms and Conditions

Refer to https://www.telit.com/terms-conditions/.

2.6 Disclaimer

THE MATERIAL IN THIS DOCUMENT IS FOR INFORMATIONAL PURPOSES ONLY. TELIT CINTERION RESERVES THE RIGHT TO MAKE CHANGES TO THE PRODUCTS DESCRIBED HEREIN. THE SPECIFICATIONS IN THIS DOCUMENT ARE SUBJECT TO CHANGE AT THE DISCRETION OF TELIT CINTERION WITHOUT PRIOR NOTICE. THIS DOCUMENT IS PROVIDED ON “AS IS” BASIS ONLY AND MAY CONTAIN DEFICIENCIES OR INADEQUACIES. TELIT CINTERION DOES NOT ASSUME ANY LIABILITY FOR INFORMATION PROVIDED IN THE DOCUMENT OR ARISING OUT OF THE APPLICATION OR USE OF ANY PRODUCT DESCRIBED HEREIN.

TELIT CINTERION GRANTS A NON-EXCLUSIVE RIGHT TO USE THE DOCUMENT. THE RECIPIENT SHALL NOT COPY, MODIFY, DISCLOSE, OR REPRODUCE THE DOCUMENT EXCEPT AS SPECIFICALLY AUTHORIZED BY TELIT CINTERION.

TELIT CINTERION AND THE TELIT CINTERION LOGO, ARE TRADEMARKS OF TELIT CINTERION AND ARE REGISTERED IN CERTAIN COUNTRIES. ALL OTHER REGISTERED TRADEMARKS OR TRADEMARKS MENTIONED IN THIS DOCUMENT ARE THE PROPERTY OF THEIR RESPECTIVE OWNERS AND ARE EXPRESSLY RESERVED BY TELIT CINTERION (AND ITS LICENSORS).

3 Power Measurement Setup Preparation

3.1 Power Consumption Setup

Power measurements will use a standard EVB cs2148 and LE310Q1 TLB connected to it.

- EVB is powered by its standard power supply (12V)
- LE310Q1 TLB is powered from an external power analyzer (e.g. Otii) or from a power supply with an in-line multimeter (connected in series) connected to "DIRECT SUPPLY" connector of the EVB.
- LE310Q1 RF out should be connected to an LTE CAT1bis network simulator (e.g. R&S CMW500/290) to perform measurements in controlled and reliable scenario.

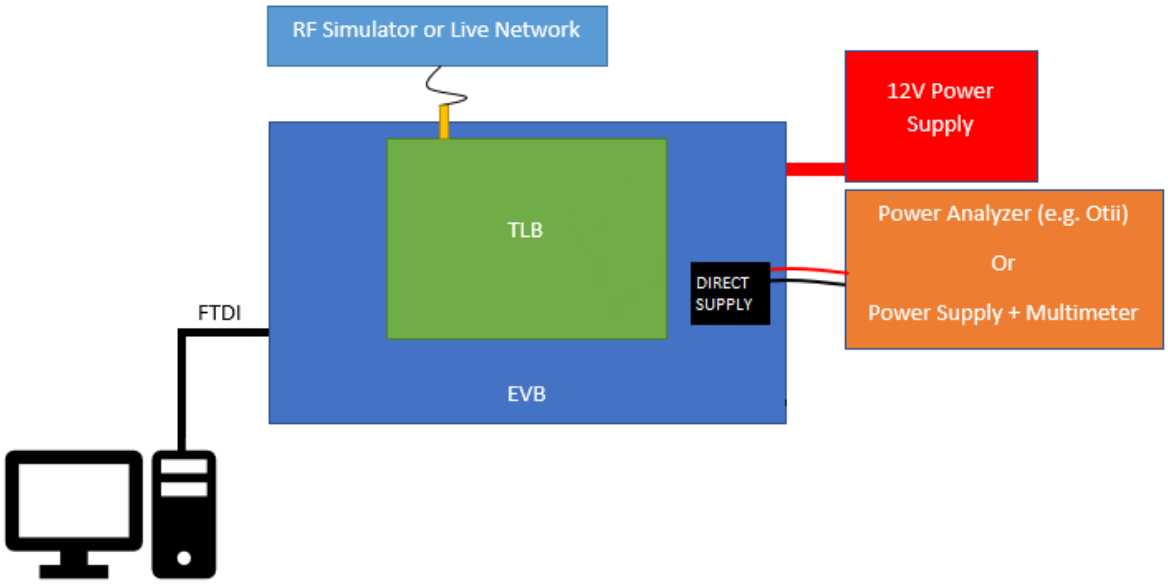

Figure 1: Power consumption Setup block Diagram

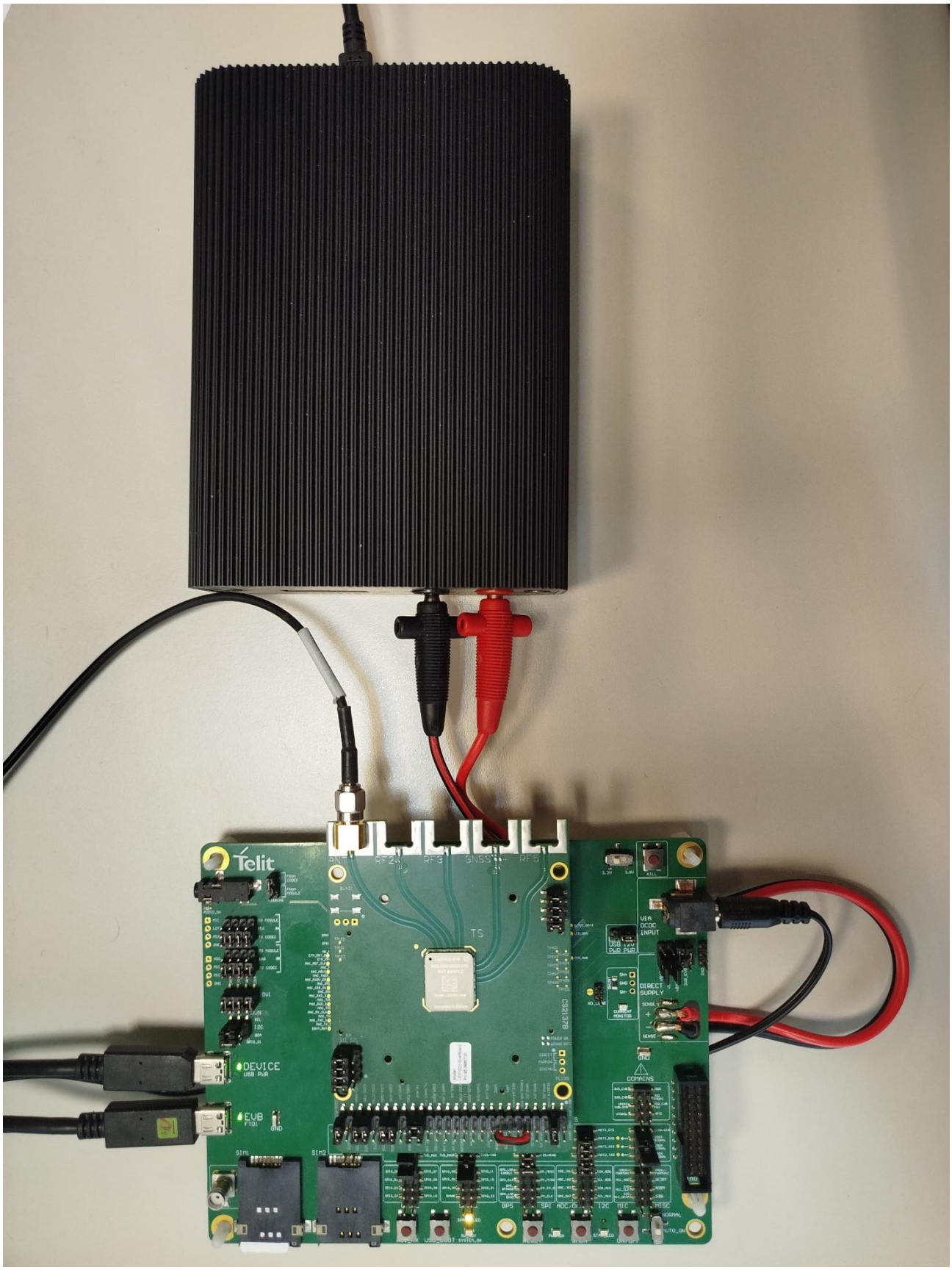

Figure 2: Otii setup

3.2 EVB/TLB configurations

3.2.1 EVB

- EVB 2148 does not need any specific configuration or rework, it should be powered with its standard 12V power supply.
- USB cable has to be connected from the Type-C USB SO601 (FTDI) connector to a personal computer in order to access the LE310Q1 serial port.
- Remove NO_LEAK jumper if present as shown in Figure 3: No LEAK jumper and PL402 power switch selector configuration

A Test SIM Card is needed to register the module to the network simulator (e.g. R&S CMW500).

3.2.2 TLB

LE310Q1 must be powered from TP401 of EVB. To accomplish this please configure the jumper as described below.

3.2.2.1 Jumper configuration

Configure the EVB DIRECT SUPPLY (PL402 of EVB) jumpers as in Figure 3:

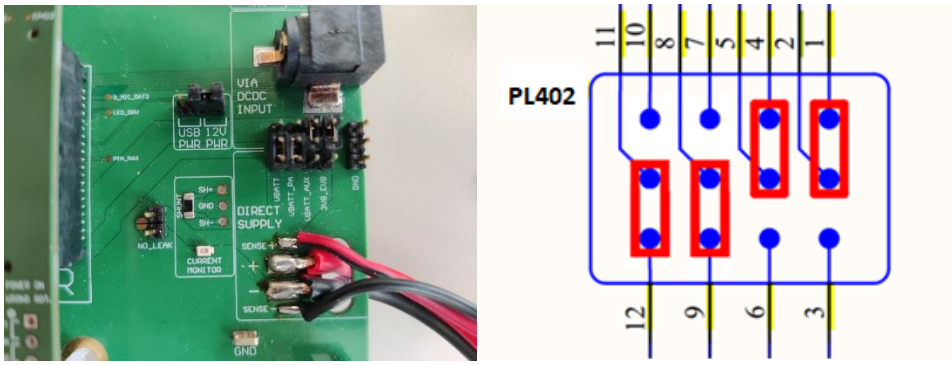

Figure 3: No LEAK jumper and PL402 power switch selector configuration

3.2.2.2 Power connections

- Connect the positive pole of the power supply to TP401/1-2 of EVB
- Connect the negative pole of the power supply to TP401/3-4 (GND) of EVB
- Sense cables (only for high current consumption measurements) can be connected to the same pins
- Voltage level to be set is 3.8V

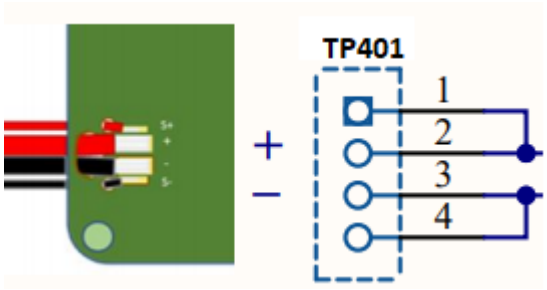

Figure 4. TP401 configuration

3.3 Wake up PIN

Module wake up pin of LE310Q1 is connected to EVB CS2148 Reset button (SW503), it is used to wake up module from power saving status.

Module wakes up at rising edge of wake up pin.

Wake up pin triggers the module to exit from power saving status:

- wake-up from +CFUN=9 status
- Asynchronous wake-up from PSM status

Note: The reset Button signal is present in PL406 pin 6 berg

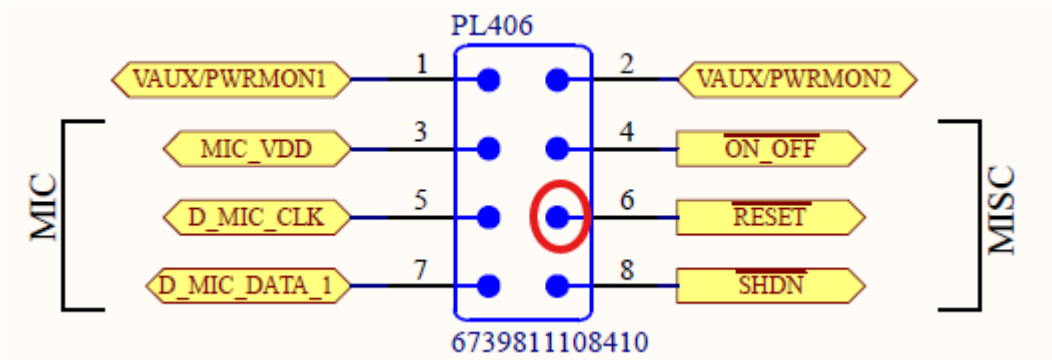

Figure 5: PL406

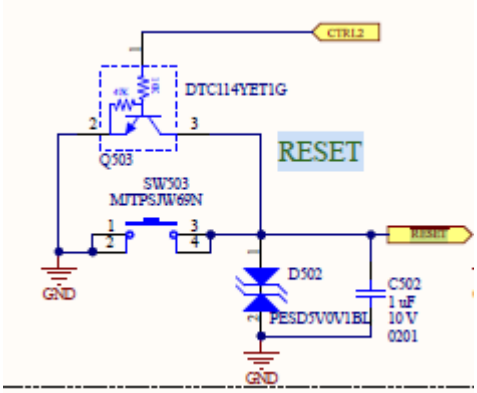

Figure 6: CS2148 Reset button

ON_OFF signal can be used for the same purposes, it must be asserted low and then released:

- wake-up from +CFUN=9 status
- Asynchronous wake-up from PSM status

4 Measurements Description

4.1 IDLE state, full power measurement

In IDLE state, LE310Q1 is fully operative, serial port is available for AT commands, module is registered to the network with RRC layers in IDLE state (not connected).

Note: If SLED is active, the power consumption will be higher than expected. It can be disabled with AT#SLED=5 to achieve the documented values

4.1.1 Steps and AT commands

In order to perform the IDLE measurements the following steps have to be executed:

- Configure and enable network simulator (e.g. R&S CMW 500)
  - Paging cycle: 2.56 seconds
  - Disable “Keep RRC connection”
  - Sub carrier Spacing 15KHz
- Enable power supply and switch-on LE310Q1
- Wait network attach and that RRC connection is released, use below AT commands to check network registration state:

```
AT+COPS?
+COPS: 0,0,”<network name>",7
OK
AT+CEREG?
+CEREG: 0,1  <- registered
OK
```

- Start power consumption measure

Below picture shows how the current profile will look like:

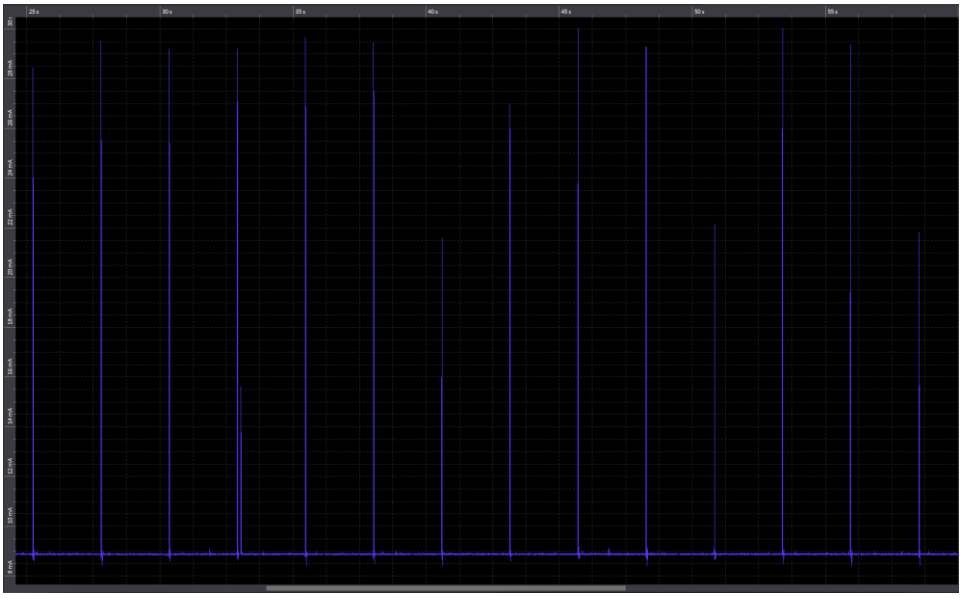

Figure 7: IDLE (CFUN1) power consumption

4.2 IDLE state, low power measurement

In low power states forced by CFUN=5 and CFUN=9, LE310Q1 enters in low power (sleep modes) during the IDLE mode. In this mode, the module is registered to the network and listening for network pagings according to the DRX used. Serial port is not available for AT commands. The LE310Q1 can be awaken using the USIF0 DTR signal or the WAKE0 pin depending on the CFUN <fun> value used.

Note: If SLED is active, the power consumption will be higher than expected. It can be disabled with AT#SLED=5 to achieve the documented values

4.2.1 CFUN=5 - Steps and AT commands

In order to perform the Low power IDLE measurements the following steps are required:

- Configure and enable network simulator (e.g. R&S CMW 500)
  - Paging cycle: 2.56 seconds
  - Disable “Keep RRC connection”
  - Sub carrier Spacing 15KHz
- Enable power supply and switch-on LE310Q1

- Wait network attach and that RRC connection is released, use below AT commands to check network registration state:

```
AT+COPS?
+COPS: 0,0,”<network name>,7
OK
AT+CEREG?
+CEREG: 0,1  <- registered
OK
```

- Enter and exit from CFUN5 power saving is related to USIF0 DTR line status
- DTR can be managed configuring the correct GPIO alternate function (see AT command user guide), selected GPIO should be connected (on TLB) to DTR line
- e.g. use gpio 1 to control DTR, on TLB PL401 connect pin 10 (GPIO_01) to pin 16 (C108/DTR)

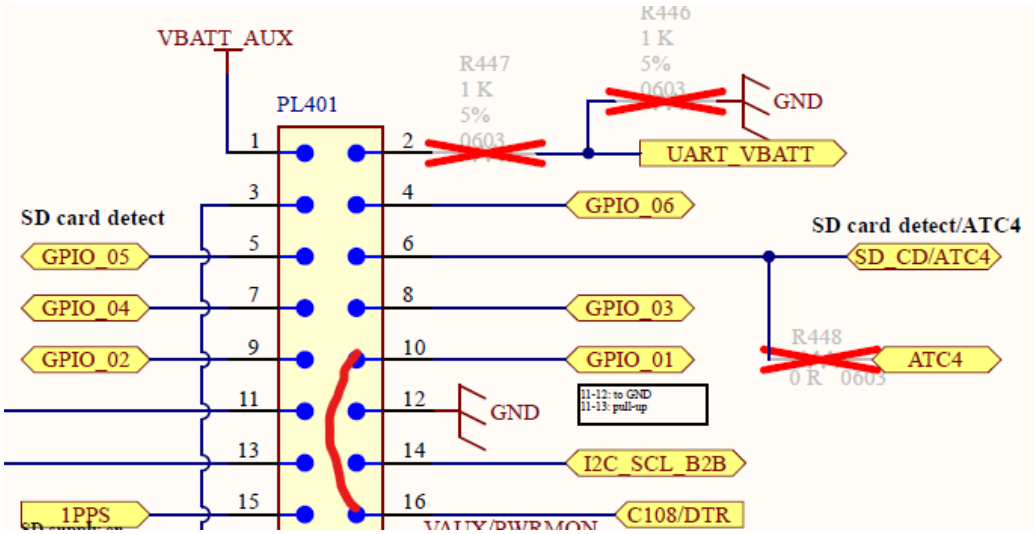

Figure 8: DVT PL401 DTR connection on TLB CS2137B

```
AT#GPIO=1,0,9 //to map DTR to GPIO1
OK
```

- Enable power saving sending AT+CFUN=5 command

```
AT+CFUN=5
OK
```

- Put USIF0 DTR to logical low state (1.8V), module will go in power saving
- Start power consumption measure.
- Put USIF0 DTR line to logical high state (0V), module will exit from power saving and go in full power mode
- To disable power saving send AT+CFUN=1 command

Below picture shows how the current profile will look like:

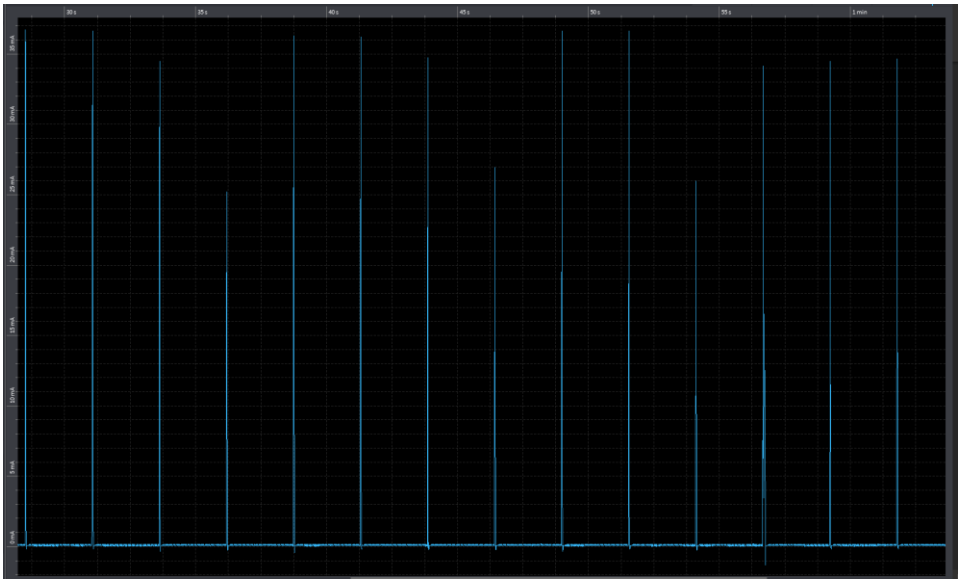

Figure 9: CFUN=5 power measurement

4.3 Power Saving Mode (PSM)

Power Saving Mode (PSM), introduced in 3GPP Release 12, enables the module to significantly reduce power consumption by suspending idle-mode activities for extended periods while still preserving the NAS (Non-Access Stratum) context. Through a dedicated signaling exchange, the module informs the network of two key parameters:

- T3412 (Extended) – the periodic TAU/RAU timer defining how long the module may remain unavailable;
- T3324 – the Active Timer indicating how long the module will remain reachable after the latest mobility or session-related procedure.

Once these timers are negotiated, the device can enter a deep low-power state without needing to detach from the network.

Operational Behavior

During the attach/RAU/TAU procedure, the module advertises PSM capability. If the network accepts PSM operation, it returns the T3324 and the extended T3412 values in the corresponding accept message. The sequence is as follows:

1. Active Timer (T3324) Period
   After RAU/TAU acceptance, T3324 starts. Throughout this interval, the module behaves as in standard idle mode: it performs paging monitoring, measurements, and other idle-state procedures.
2. Transition to PSM
   When T3324 expires, the module enters PSM. In this state, it disables both AS and NAS activities, effectively turning most of the radio and protocol stack off. Only minimal circuitry (e.g., RTC) remains active.
3. Inactivity Interval
   The duration during which the device is unreachable is:
   Inactivity Period = T3412_ext – T3324
   During this time, the network buffers paging attempts until the module becomes available again at the next periodic RAU/TAU.
4. PSM Exit Conditions
   The module exits PSM under either of the following conditions:
   - Mobile-originated data transmission (MO-triggered wake-up);
   - Expiry of the periodic TAU/RAU timer (T3412).

Before entering PSM, the complete NAS context is stored internally so that it can be restored when the module next re-establishes communication.

Advantages and Limitations

PSM provides substantial energy savings, primarily by avoiding repeated idle-mode procedures and periodic paging monitoring. Unlike a standard detach/attach cycle, PSM reduces signaling load at NAS level as defined in 3GPP TS 24.301 (Rel. 12, §5.3.11).

However, the main limitation is that the module remains unreachable for mobile-terminated services (MT calls, downlink data) during the inactivity period. This makes PSM suitable only for applications that can tolerate high MT latency.

Standard Constraints

The 3GPP specification defines the signaling procedures and timers used for PSM but does not mandate specific current-consumption levels or exact power states. The actual power savings depend on individual module implementations.

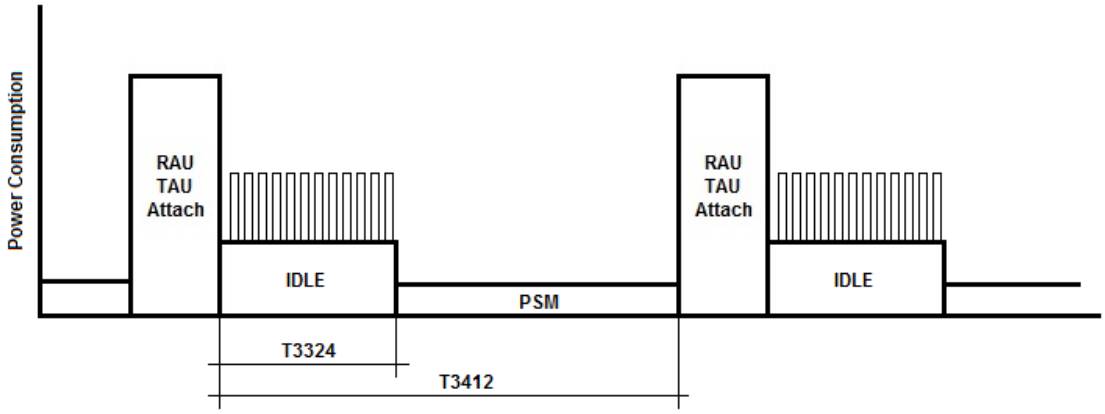

Figure 10: PSM timers

4.3.1 LE310Q1 PSM

LE310Q1 implements PSM features and allows the user to activate PSM by sending the specific AT command AT+CPSMS as described in the AT Command User Guide.

As soon as PSM has been accepted by the network (i.e. Timers have been received in TAU Accept message) T3324 starts and LE310Q1 is in IDLE state with default module functionality.

As T3324 expires, the module enters the PSM state which is basically an OFF state (with RTC running in the background) bringing the current consumption level to around 3.9 uA.

Users willing to decrease the power consumption during T3324 can combine a power saving state with PSM.

An example of command to activating PSM for LE310Q1 is as follows:

```
AT+CPSMS=1,,,”10000011”,”00001010”
where
T3412= 10000011 / 131  -> 90 sec
T3324= 00001010 / 10    -> 20 sec
```

+CPSMS command accepts both binary and decimal values for timers

With these settings the module will send TAU every 90 sec and will stay IDLE for 20 sec. This is true when using a network simulator because in a real environment the final decision of which timers have to be applied is taken by the network that can accept the proposed timers or force its own timers. If different timers are sent back by the network, then DUT must apply the Network timers.

If an application cannot support modules being out of connection for so long but it is still willing to reduce power, then eDRX feature should be evaluated.

Note: If SLED is active, the power consumption will be higher than expected. It can be disabled with AT#SLED=5 to achieve the documented values

4.3.2 Steps and AT commands

In order to perform the PSM measurements the following steps are required:

- Configure and enable network simulator (e.g. R&S CMW 500)
- Paging cycle: 2.56 seconds
- Disable “Keep RRC connection”
- Sub carrier Spacing 15KHz
- Enable “PSM allowed”
- Enable power supply and switch-on LE310Q1
- Wait network attach and that RRC connection is released, use below AT commands to check network registration state:

```
AT+COPS?
+COPS: 0,0,”<network name>",7
OK
AT+CEREG?
+CEREG: 0,1  <- registered
OK
```

- Enable PSM with the +CPSMS command:

```
AT+CPSMS=1,,,”10000011”,”00001010” – (T3412 -> 90 sec, T3324 -> 20 sec)
```

- Module will go in power saving after T3324 expires
- Start power consumption measure
- Rising edge of wake-up pin (as described in 3.3) for asynchronous wake-up
- To disable PSM, send AT+CPSMS=0 command

Below picture shows how the current profile will look like:

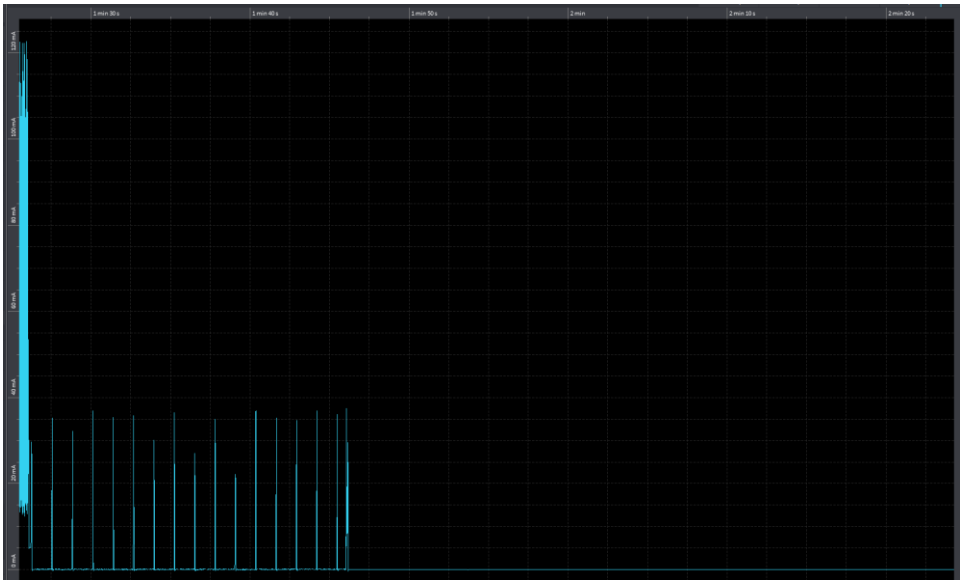

Figure 11: PSM phase after T3324 window

4.4 Extended Discontinuous Reception (eDRX)

Extended Discontinuous Reception (eDRX) is an enhancement of the standard DRX mechanism used in RRC Idle mode to reduce UE power consumption. Under conventional DRX, the UE periodically wakes to monitor the paging channel and remains in a low-power state between paging occasions. eDRX allows the device to define a time window where it will not listen to the paging channel still maintaining network registration.

Because eDRX limits the time-window in IDLE state where the device is periodically listening to the paging channel, this feature must be negotiated with the network. Once configured, the network buffers paging attempts and delivers them during the next UE listening opportunity.

eDRX Timers

eDRX operation is governed by two main parameters:

- Paging Time Window (PTW):
  The interval during which the UE behaves according to standard DRX and actively listens for paging messages.
- eDRX Cycle:
  The time between the start of two consecutive PTWs.
  During this interval, the UE may sleep for extended periods.

Both parameters are exchanged during the Attach or RAU/TAU Accept procedure, allowing the network and UE to synchronize eDRX behavior.

Operational Behavior

Once eDRX is activated through the appropriate command, the DRX listening activity is suppressed for most of the extended eDRX cycle: the device remains asleep—without monitoring the paging channel—from the end of the PTW until the start of the next cycle. In practice, this means the UE becomes unreachable for mobile-terminated services during most of the eDRX cycle, except during the PTW.

A typical comparison between standard DRX and eDRX timing behavior is shown in Figure below:

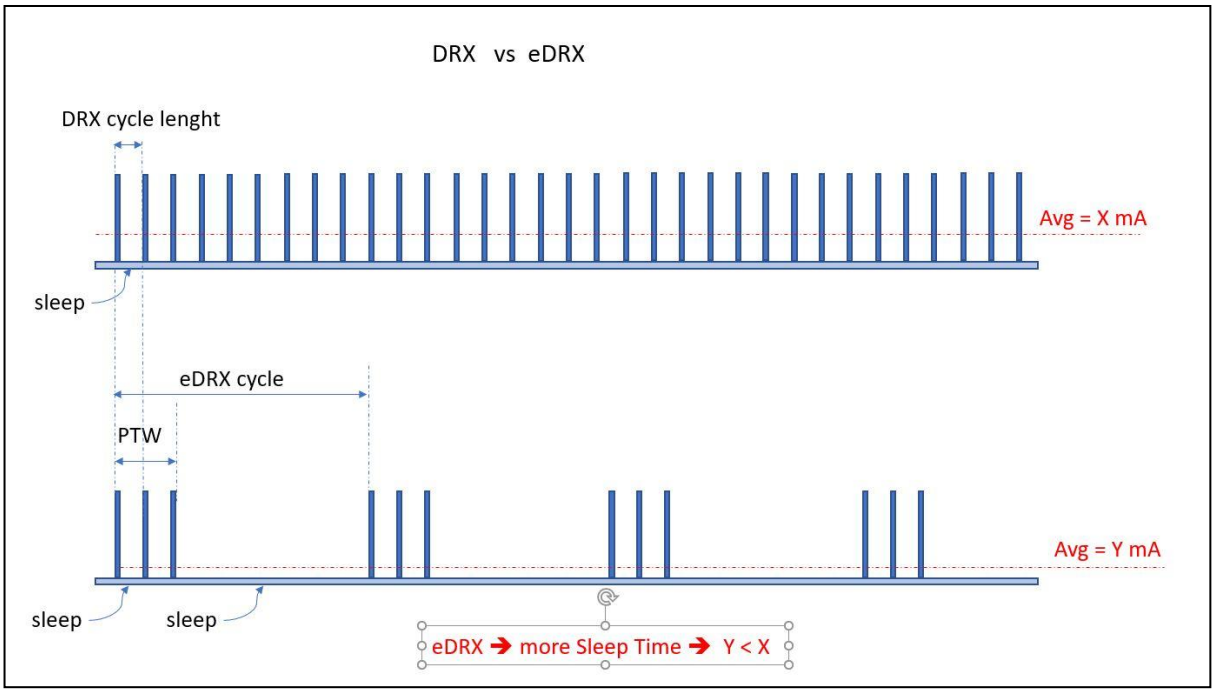

Figure 12: DRX vs eDRX comparison

Relation to PSM and Deployment Considerations

eDRX and PSM serve similar purposes—reducing power consumption—but operate under different principles:

- PSM is generally more efficient for devices that can remain unresponsive for long intervals (e.g., more than 24 hours).
- eDRX is more suitable when the application requires the device to be reachable periodically, with maximum gaps typically ranging from minutes to a few hours.

There is therefore a practical break-even point:

If the application requires frequent reachability (e.g., at least every few hours), eDRX is often the preferred mechanism.

If the device can remain unavailable for extended durations, PSM may offer better overall efficiency.

Combined Use of PSM and eDRX

PSM and eDRX are not mutually exclusive and can work together. If PSM and eDRX are applied at the same time eDRX will basically work during the PSM idle time reducing the power consumption within the T3324.

4.4.1.1 Default configuration

In a test environment scenario the following command will set eDRX cycle=81,92 s (see AT command user guide for detailed definition):

```
AT+CEDRXS=1,4, "0101"
OK
Where Req_eDRX=0101 -> 81.92 s
AT+CEDRXS=1,4,<Req_eDRX>
```

+CEDRXS command accepts both binary and decimal values for timers

When eDRX is used in combination with the CFUN5-Like state, it allows to achieve good average current consumption values.

A specific <fun> value of AT+CFUN (AT+CFUN=9) command has been introduced to allow module to achieve lowest current consumption.

From AT+CFUN=9, the WAKE0 pin must be used for asynchronous wake-up.

Note: If SLED is active, the power consumption will be higher than expected. It can be disabled with AT#SLED=5 to achieve the documented values

4.4.1.2 Steps and AT commands

In order to perform the eDRX measurements follows steps below:

- Configure and enable network simulator (e.g. R&S CMW 500)
  - Paging cycle: 2.56 seconds
  - Disable "Keep RRC connection"
  - Sub carrier Spacing 15KHz
  - Enable eDRX support, set PTW=2.56 s, eDRX=81.92 s, Paging=1.28 s
- Enable power supply and switch-on LE310Q1
- Wait network attach and that RRC connection is released, use below AT commands to check network registration state:

```
AT+COPS?
+COPS: 0,0,"<network name>,7
OK
AT+CEREG?
+CEREG: 0,1  <- registered
OK
```

- Enable eDRX and check activation status:

```
AT+CEDRXS=1,4,”0101” ← LTE edrx 81.92s
OK
AT+CEDRXRDP ← check eDRX activation
+CEDRXRDP: 4,"0101","0101","0001" ← eDRX 81.92s PTW 2.56s

OK
```

Module is now in eDRX idle state, but it can be put in power saving mode using AT+CFUN=5 command as described in section 4.2 or AT+CFUN=9 to have lowest current consumption.

4.4.2 AT+CFUN=5 in combination with eDRX

- Repeat steps in section 4.2

```
AT#GPIO=1,0,9 //to map DTR to GPIO1
OK
AT+CFUN=5
OK
```

- Put USIF0 DTR to logical low state (1.8V), module will go in power saving
- Start power consumption measure.
- Put USIF0 DTR line to logical high state (0V), module will exit from power saving and go to idle state
- To disable power saving send AT+CFUN=1 command
- To disable eDRX send AT+CEDRXS=0
- Following picture shows how the current profile will look like:

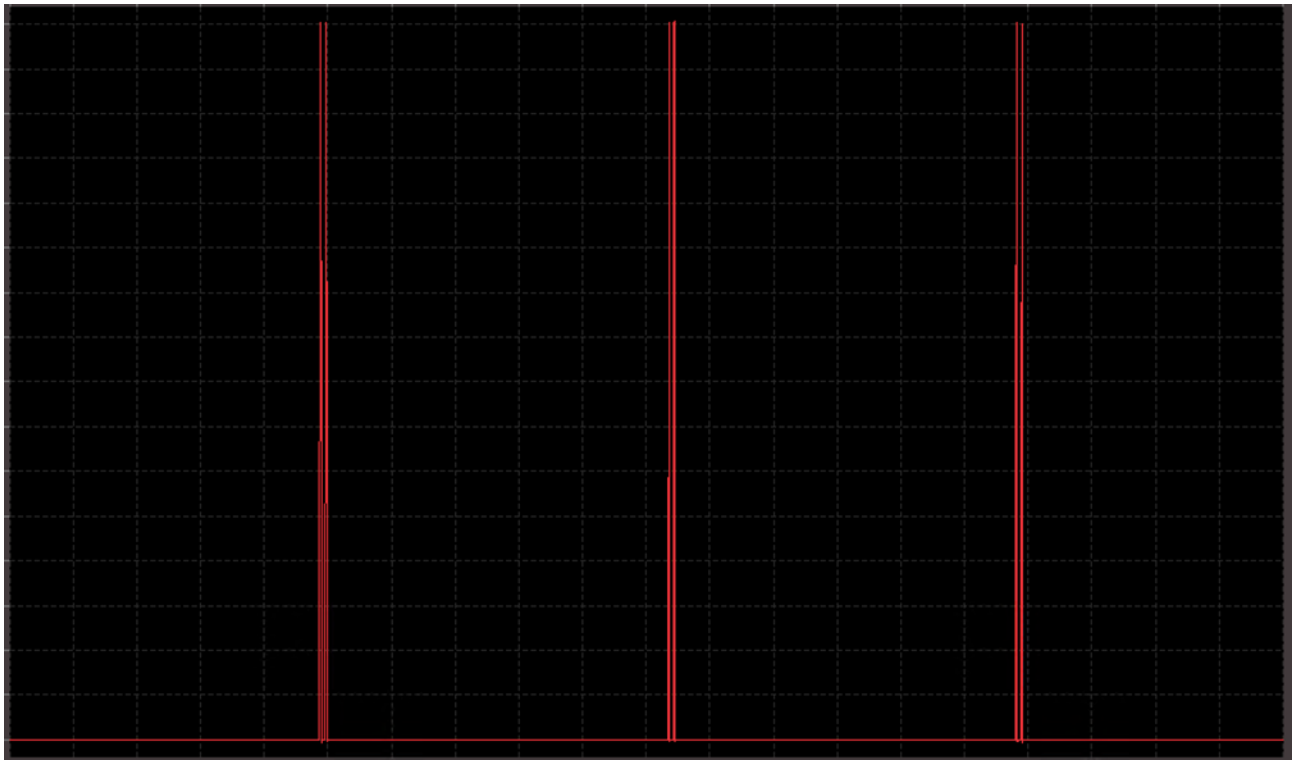

Figure 13: eDRX +CFUN=5 power consumption PTW=2.56, iDRX=1.28sec, eDRX=81.92 sec

Note: If SLED is active, the power consumption will be higher than expected. It can be disabled with AT#SLED=5 to achieve the documented values

4.4.3 AT+CFUN=9 in combination with eDRX

```
AT+CFUN=9
OK
```

- Start power consumption measure.
- Rising edge of wake-up pin (as described in 3.3) for wake-up
- After wake-up pin module goes back to CFUN=1 status
- To disable eDRX send AT+CEDRXS=0
- Following picture shows how the current profile will look like, profile is similar to CFUN=5 scenario, but average current consumption between PTW is lower:

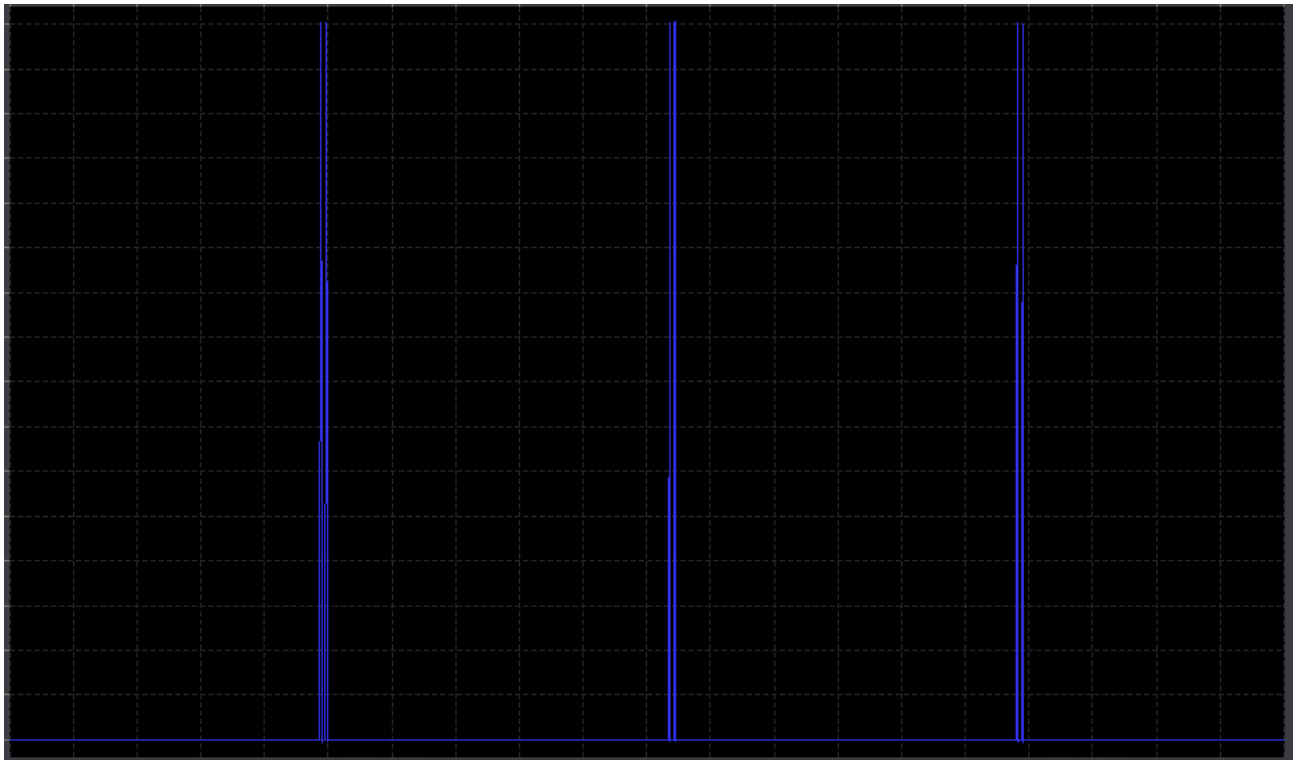

Figure 14: eDRX +CFUN=9 power consumption PTW=2.56, iDRX=1.28sec, eDRX=81.92 sec

Note: If SLED is active, the power consumption will be higher than expected. It can be disabled with AT#SLED=5 to achieve the documented values

5 Acronyms and Abbreviations

Table 2: Acronyms and Abbreviations

Acronym	Definition
PSM	Power saving Mode
RRC	Radio Resource Control
DRX	Discontinuous Reception
eDRX	Extended DRX mode
PTW	Paging Time Window
TAU	Tracking Area Update
RAU	Routing Area Update
AS	Access Stratum
NAS	Non Access Stratum
MO	Mobile Originated
MT	Mobile Terminated
UE	User Equipment
RTC	Real Time Clock
NBIOT	Narrow Band Internet Of Things
I2C	Inter Integrated Circuit
I/O	Input Output
PCB	Printed Circuit Board
PDP	Packet Data Protocol
SIM	Subscriber Identification Module
RSSI	Radio Signal Strength Information
TATC	Telit AT Controller
TTSC	Telit Technical Support Centre
UART	Universal Asynchronous Receiver Transmitter
URC	Unsolicited Result Code
USB	Universal Serial Bus

6 Document History

Table 3: Document History

Revision	Date	Changes
0	2026-02-19	Initial release

© Telit Cinterion. All rights reserved.

Technical Documentation