LE310X1

Interface User Guide

1VV0302095 Rev.0
2026-01-14
Released
Confidential

Technical Documentation

Contents

1 Applicability Table 3
2 Introduction 4
2.1 Scope 4
2.2 Audience 4
2.3 Contact Information, Support 4
2.4 Conventions 5
2.5 Terms and Conditions 5
2.6 Disclaimer 5
3 General Product Description 6
3.1 Overview 6
4 LE310X1 Interface TLB for EVB 2.0 7
4.1 Description 7
4.2 Physical Dimensions 7
4.3 Interface Details 8
5 PL101, PL102, PL103 – EVB 2.0 Connection 11
6 Antenna Connectors and miscellaneous 14
6.1 SO304 – MAIN Antenna Connector 14
6.2 WAKEUP push button 14
7 SIM select Connector 15
7.1 PL201 and PL202 15
8 Expansion Connector 16
8.1 PL401 16
9 ANNEX 1 LE310X1 Interface TLB Schematics 18
10 ANNEX 2 LE310X1 Interface TLB Components Layout 24
11 Acronyms and Abbreviations 27
12 Related Documents 28
13 Document History 29

1 Applicability Table

Table 1: Applicability Table

Products
LE310X1-EU
LE310X1-LA

2 Introduction

2.1 Scope

The aim of this document is the handling description of the Interfaces for the LE310X1 products based on xE310 form factor.

2.2 Audience

This document is intended for system integrators that are using the Telit Cinterion LE310X1 module in their products.

2.3 Contact Information, Support

For technical support and general questions, e-mail:

- TS-EMEA@telit.com
- TS-AMERICAS@telit.com
- TS-APAC@telit.com
- TS-SRD@telit.com
- TS-ONEEDGE@telit.com

Alternatively, use: https://www.telit.com/contact-us/

For Product information and technical documents, visit: https://www.telit.com

2.4 Conventions

Note: Provide advice and suggestions that may be useful when integrating the module.

Danger: This information MUST be followed, or catastrophic equipment failure or personal injury may occur.

Warning: Alerts the user on important steps about the module integration.

All dates are in ISO 8601 format, that is YYYY-MM-DD.

2.5 Terms and Conditions

Refer to https://www.telit.com/terms-conditions/.

2.6 Disclaimer

THE MATERIAL IN THIS DOCUMENT IS FOR INFORMATIONAL PURPOSES ONLY. TELIT CINTERION RESERVES THE RIGHT TO MAKE CHANGES TO THE PRODUCTS DESCRIBED HEREIN. THE SPECIFICATIONS IN THIS DOCUMENT ARE SUBJECT TO CHANGE AT THE DISCRETION OF TELIT CINTERION WITHOUT PRIOR NOTICE. THIS DOCUMENT IS PROVIDED ON “AS IS” BASIS ONLY AND MAY CONTAIN DEFICIENCIES OR INADEQUACIES. TELIT CINTERION DOES NOT ASSUME ANY LIABILITY FOR INFORMATION PROVIDED IN THE DOCUMENT OR ARISING OUT OF THE APPLICATION OR USE OF ANY PRODUCT DESCRIBED HEREIN.

TELIT CINTERION GRANTS A NON-EXCLUSIVE RIGHT TO USE THE DOCUMENT. THE RECIPIENT SHALL NOT COPY, MODIFY, DISCLOSE, OR REPRODUCE THE DOCUMENT EXCEPT AS SPECIFICALLY AUTHORIZED BY TELIT CINTERION.

TELIT CINTERION AND THE TELIT CINTERION LOGO, ARE TRADEMARKS OF TELIT CINTERION AND ARE REGISTERED IN CERTAIN COUNTRIES. ALL OTHER REGISTERED TRADEMARKS OR TRADEMARKS MENTIONED IN THIS DOCUMENT ARE THE PROPERTY OF THEIR RESPECTIVE OWNERS AND ARE EXPRESSLY RESERVED BY TELIT CINTERION (AND ITS LICENSORS).

3 General Product Description

3.1 Overview

The Telit EVB 2.0 provides a robust, future-proof and flexible environment to streamline all application development based on Telit GSM/GPRS, UMTS/HSPA, CDMA 1x/EV-DO, and LTE module families, significantly reducing time-to-market.

The EVB 2.0 includes a motherboard where to connect the Interface board of a Telit module.

This concept allows the EVB 2.0 to be used across various form factors and product generations, both present and future.

The motherboard includes the basic interfaces such as power input, SIM card holder, audio monitor outputs, RS-232, and USB; as well as a Reset button and power switch. The circuit parts implemented in the EVB 2.0 motherboard can be used as examples, but in a typical application they can often be simpler.

Adapter boards are available for all the different module families.

The part of the basic interfaces is served by the motherboard, whereas specific interfaces according to the type of the module (antenna, general purpose inputs/outputs GPIO, ADC/DAC, UART) are available on the adapter board to connect it to the user applications, extension boards, measurements equipment or other tools.

4 LE310X1 Interface TLB for EVB 2.0

4.1 Description

This board allows easily interfacing the LE310X1 modules with the Telit EVB 2.0 and testing their functionalities.

4.2 Physical Dimensions

Table 2: Physical Dimensions

Item	Dimension
Length	100mm
Width	70mm
Height	25mm

4.3 Interface Details

Connectors' Position

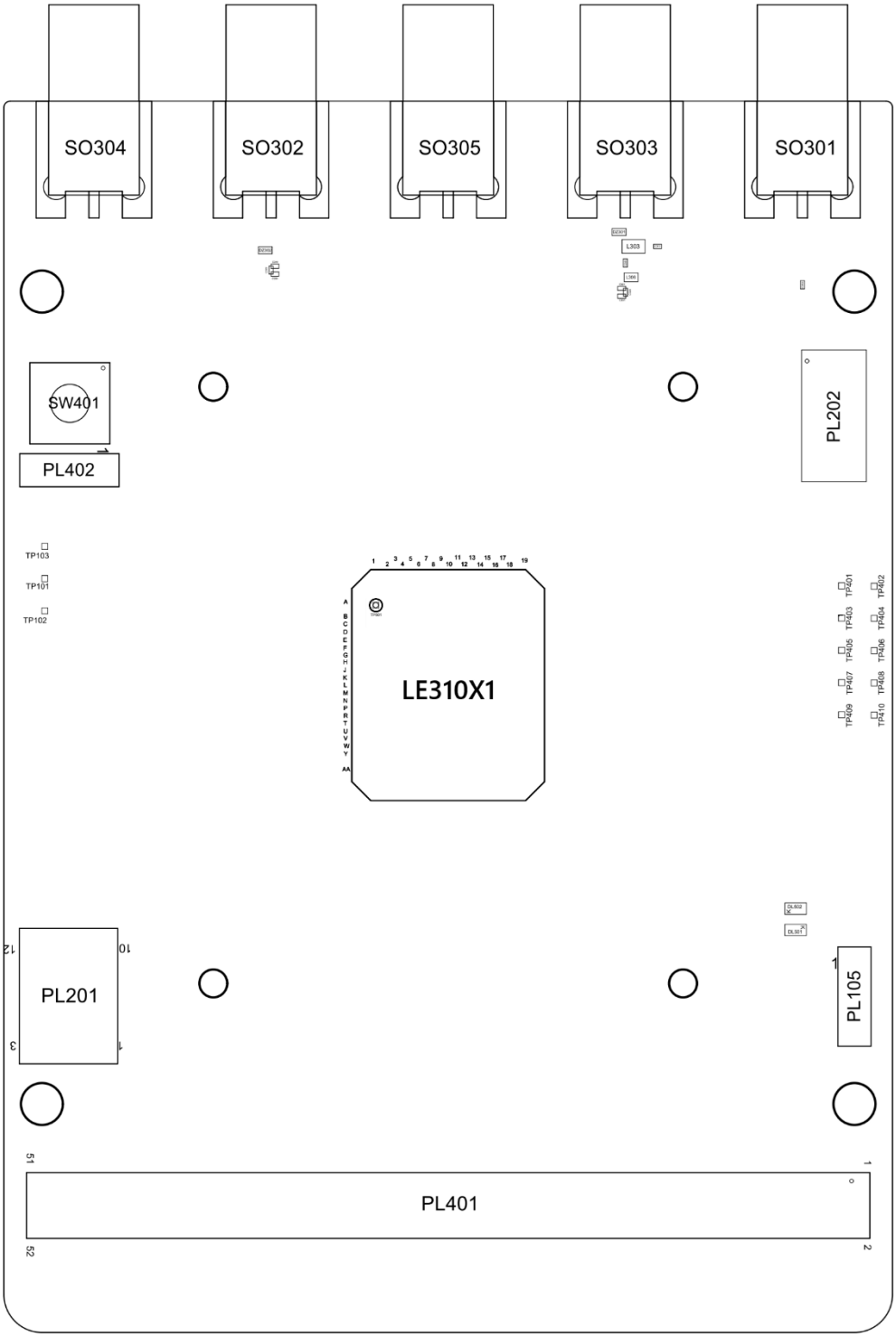

Figure 1: Connectors' Position – Top View

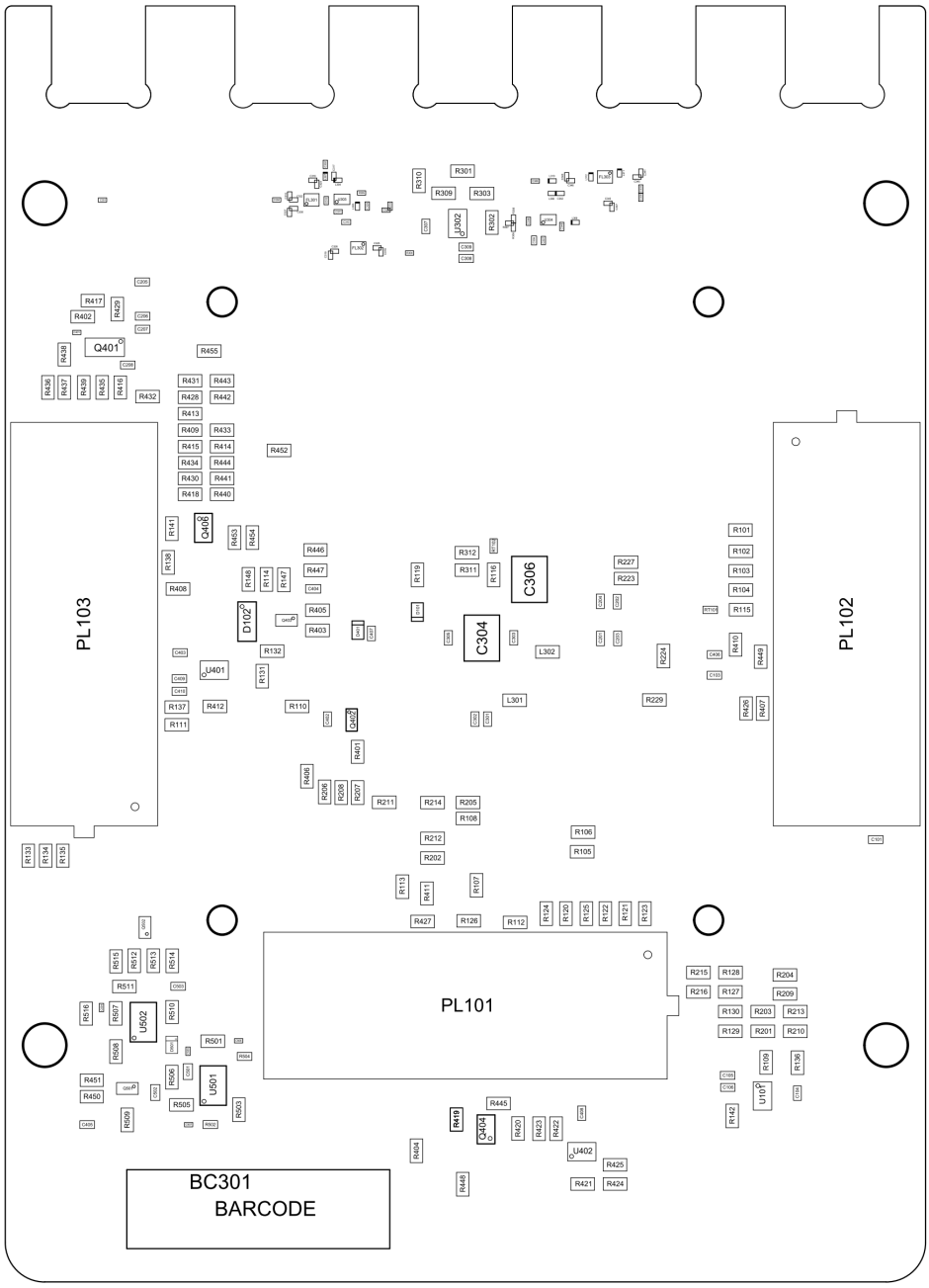

Figure 2: Connectors' Position – Bottom View

Jumpers' Setting

The following picture shows the jumpers' placement and their default settings.

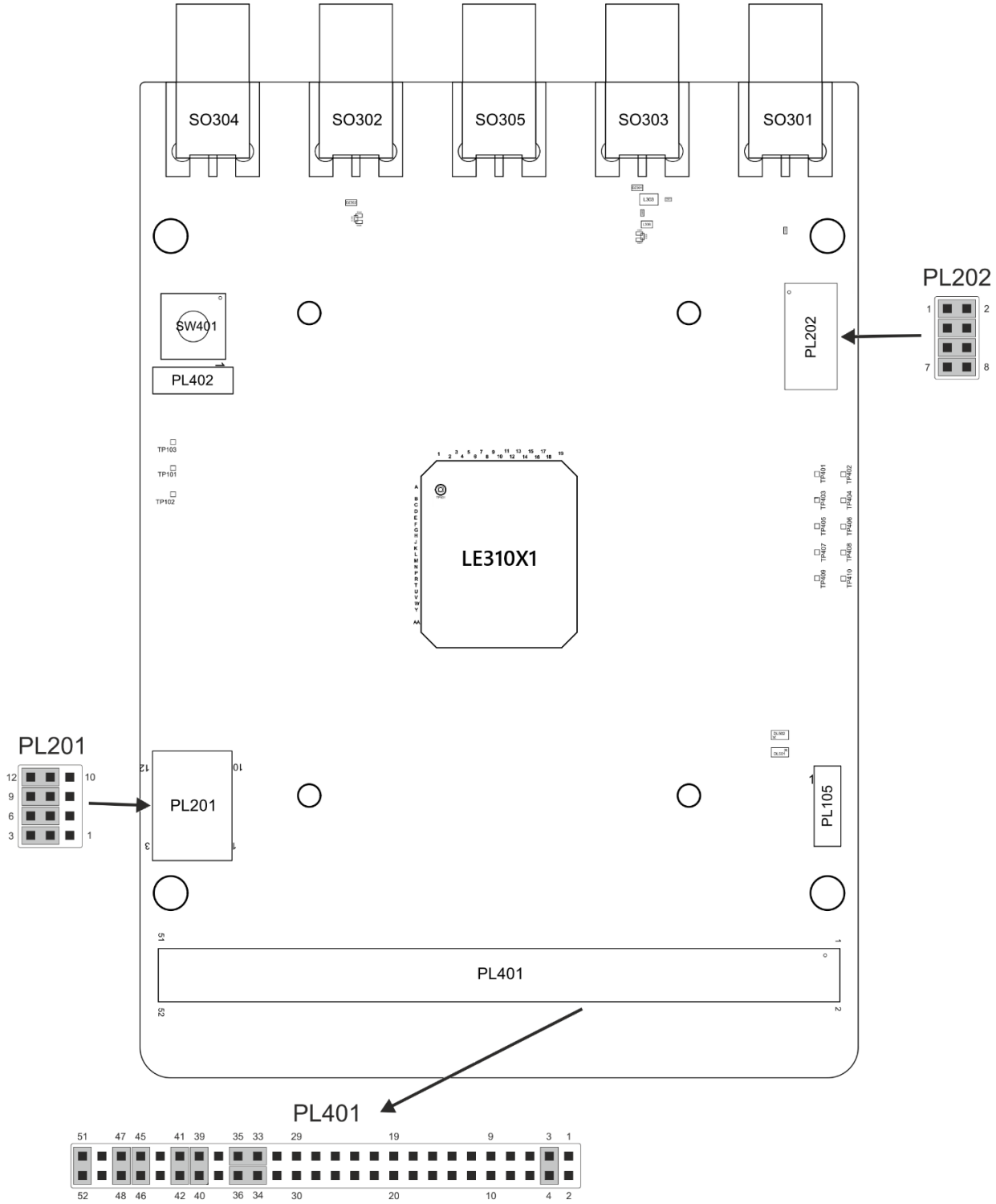

Figure 3: Jumpers' Setting

5 PL101, PL102, PL103 – EVB 2.0 Connection

The connections between the Interface and the EVB 2.0 is done through three 6x20 pin connectors present on the bottom (PL101, PL102, and PL103).

The connector is a Samtec SEAM Series - .050" (1.27 mm) High Speed/High Density Open Pin Field with p/n is SEAM-20-09.0-L-06-2-A-K-TR.

Their pin functions are listed in the following tables:

Table 3: PL101 Pin Functions

Pin	Function	Pin	Function	Pin	Function	Pin	Function	Pin	Function	Pin	Function
1	GND	2	GND	3	NC	4	NC	5	GND	6	NC
7	NC	8	GND	9	I2C_SDA_B2B	10	GPIO_06	11	NC	12	NC
13	NC	14	GND	15	GPIO_05	16	I2C_SDA_B2B	17	NC	18	GND
19	GND	20	GND	21	VAUX/PWRMON2	22	VAUX/PWRMON2	23	GND	24	NC
25	NC	26	GND	27	NC	28	NC	29	NC	30	NC
31	NC	32	GND	33	NC	34	SPI_MOSI	35	NC	36	GND
37	GND	38	NC	39	NC	40	GPIO_04	41	GND	42	NC
43	SPI_CS	44	GPIO_02	45	GPIO_03	46	SPI_MISO	47	NC	48	NC
49	VAUX/PWRMON1	50	VAUX/PWRMON1	51	NC	52	SPI_CLK	53	NC	54	NC
55	NC	56	NC	57	GPIO_01	58	NC	59	NC	60	NC
61	NC	62	NC	63	NC	64	NC	65	NC	66	NC
67	Reserved	68	Reserved	69	Reserved	70	Reserved	71	NC	72	NC
73	Reserved	74	Reserved	75	Reserved	76	Reserved	77	NC	78	NC
79	GND	80	GND	81	Reserved	82	Reserved	83	NC	84	NC
85	NC	86	NC	87	NC	88	NC	89	TX_TRACE_1V8	90	RTS_AUX
91	NC	92	NC	93	NC	94	NC	95	TXTRACE_1V8	96	CTS_AUX
97	NC	98	NC	99	NC	100	NC	101	NC	102	NC
103	Reserved	104	NC	105	NC	106	C105/RTS0_1V8	107	NC	108	NC
109	C104/RXD0_1V8	110	C109/DCD	111	C103/TXD0_1V8	112	C106/CTS0_1V8	113	C108/DTR	114	NC
115	NC	116	NC	117	NC	118	NC	119	NC	120	NC

Table 4: PL102 Pin Functions

Pin	Function	Pin	Function	Pin	Function	Pin	Function	Pin	Function	Pin	Function
1	Reserved	2	GND	3	Reserved	4	NC	5	GND	6	NC
7	GND	8	GND	9	GND	10	GND	11	GND	12	NC
13	NC	14	NC	15	GND	16	NC	17	NC	18	NC

Pin	Function	Pin	Function	Pin	Function	Pin	Function	Pin	Function	Pin	Function
19	GND	20	GND	21	GND	22	GND	23	GND	24	GND
25	NC	26	NC	27	GND	28	NC	29	NC	30	GND
31	NC	32	NC	33	NC	34	NC	35	NC	36	NC
37	GND	38	GND	39	NC	40	NC	41	GND	42	GND
43	NC	44	GND	45	GND	46	GND	47	GND	48	GND
49	NC	50	GND	51	GND	52	NC	53	NC	54	ADC_IN1
55	NC	56	NC	57	NC	58	NC	59	Reserved	60	NC
61	Reserved	62	Reserved	63	Reserved	64	Reserved	65	NC	66	GND
67	GND	68	GND	69	GND	70	GND	71	GND	72	NC
73	GND	74	GND	75	GND	76	GND	77	SIMVCC1	78	SIMVCC1
79	NC	80	NC	81	SIMCLK1	82	SIMIN1	83	SIMIO1	84	SIMRST1
85	NC	86	NC	87	NC	88	NC	89	SIMVCC2	90	SIMVCC2
91	USB_VBUS	92	NC	93	SIMIN2	94	SIMIO2	95	SIMRST2	96	SIMCLK2
97	GND	98	GND	99	NC	100	NC	101	NC	102	NC
103	USB_D+	104	GND	105	NC	106	NC	107	NC	108	NC
109	USB_D-	110	GND	111	NC	112	NC	113	NC	114	NC
115	GND	116	GND	117	NC	118	NC	119	NC	120	NC

Table 5: PL103 Pin Functions

Pin	Function	Pin	Function	Pin	Function	Pin	Function	Pin	Function	Pin	Function
1	VBATT	2	VBATT	3	VBATT	4	VBATT_PA	5	VBATT_PA	6	VBATT_PA
7	VBATT	8	VBATT	9	VBATT	10	VBATT_PA	11	VBATT_PA	12	VBATT_PA
13	VBATT	14	VBATT	15	VBATT	16	VBATT_PA	17	VBATT_PA	18	VBATT_PA
19	VBATT_AUX_EVB	20	VBATT_AUX_EVB	21	VBATT_AUX_EVB	22	VBATT_PA	23	VBATT_PA	24	VBATT_PA
25	GND	26	GND	27	GND	28	GND	29	GND	30	NC
31	GND	32	NC	33	GND	34	Reserved	35	Reserved	36	NC
37	NC	38	NC	39	GND	40	GND	41	GND	42	GND
43	NC	44	NC	45	NC	46	NC	47	NC	48	NC
49	NC	50	NC	51	NC	52	NC	53	NC	54	NC
55	NC	56	NC	57	UART3_TXD	58	UART3_RXD	59	UART3_RTS	60	UART3_CTS
61	NC	62	NC	63	NC	64	NC	65	NC	66	NC
67	NC	68	NC	69	NC	70	NC	71	NC	72	NC
73	NC	74	NC	75	NC	76	NC	77	NC	78	Reserved
79	NC	80	NC	81	GND	82	Reserved	83	GND	84	GND
85	GND	86	GND	87	GND	88	GND	89	GND	90	GND
91	WAKEUP_B2B	92	ON_OFF	93	STAT_LED	94	NC	95	NC	96	RESET*_EVB
97	GND	98	GND	99	GND	100	GND	101	Reserved	102	Reserved

Pin	Function	Pin	Function	Pin	Function	Pin	Function	Pin	Function	Pin	Function
103	1PPS	104	NC	105	NC	106	GND	107	Reserved	108	Reserved
109	GND	110	GND	111	GND	112	GND	113	Reserved	114	NC
115	Reserved	116	Reserved	117	Reserved	118	Reserved	119	Reserved	120	Reserved

6 Antenna Connectors and miscellaneous

6.1 SO304 – MAIN Antenna Connector

The MAIN Antenna is available on SO304 and it is a female SMA connector.

A compatible antenna (Refer to the product's HW Design guide) must be connected to SO304.

6.2 WAKEUP push button

There is a dedicated wakeup signals for LE310X1 product, WAKEUP on pad P18 of the module's pinout. This wakeup signals is active HIGH.

All you have to do is to push the "RESET" button SW503 on EVB 2.0 to assert HIGH the WAKEUP on pad P18 of the module's pinout.

7 SIM select Connector

7.1 PL201 and PL202

The PL201 and PL202 connectors carry the following signals:

Table 6: PL201 External SIM1 connector signals

Pin	Signal	Function
1	SIM_RST2	Not for all module configurations, please don't consider this pin
2	SIMRST	SIM reset: From microcontroller inside the module.
3	SIMRST1	SIM reset: To EVB 2.0 SIM holder 1 (External SIM1)
4	SIM_DAT2	Not for all module configurations, please don't consider this pin
5	SIMIO	SIM data: From microcontroller inside the module
6	SIMIO1	SIM data: To EVB 2.0 SIM holder 1 (External SIM1)
7	SIM_CLK2	Not for all module configurations, please don't consider this pin
8	SIMCLK	SIM clock: From microcontroller inside the module
9	SIMCLK1	SIM clock: To EVB 2.0 SIM holder 1 (External SIM1)
10	SIM_VCC2	Not for all module configurations, please don't consider this pin
11	SIMVCC	SIM supply: From microcontroller inside the module
12	SIMVCC1	SIM supply: To EVB 2.0 SIM holder 1 (External SIM1)

Table 7: PL202 External SIM2 connector signals

Pin	Signal	Function
1	SIM_VCC2	SIM2 supply: From microcontroller inside the module
2	SIMVCC2	SIM2 supply: To EVB 2.0 SIM holder 2 (External SIM2)
3	SIM_CLK2	SIM2 clock: From microcontroller inside the module
4	SIMCLK2	SIM2 clock: To EVB 2.0 SIM holder 2 (External SIM2)
5	SIM_DAT2	SIM2 data: From microcontroller inside the module
6	SIMIO2	SIM2 data: To EVB 2.0 SIM holder 2 (External SIM2)
7	SIM_RST2	SIM2 reset: From microcontroller inside the module
8	SIMRST2	SIM2 reset: To EVB 2.0 SIM holder 2 (External SIM2)

8 Expansion Connector

8.1 PL401

The PL401 connector carries the following signals:

Table 8: PL401 connector signals

Pin	Signal	Function
1	VBATT_AUX	Interface Power supply
2	Reserved	Reserved
3	SIMIN2	SIM detect signal from EVB 2.0 SIM holder 2
4	GPIO_06	General Purpose IO #6
5	GPIO_05	General Purpose IO #5
6	Reserved	Reserved
7	GPIO_04	General Purpose IO #4
8	GPIO_03	General Purpose IO #3
9	GPIO_02	General Purpose IO #2
10	GPIO_01	General Purpose IO #1
11	FORCED_USB_BOOT	Set to 1.8V at power-up to set the module in program mode
12	GND	Ground
13	V180	1.8V supply
14	I2C_SCL_B2B	I2C clock
15	Reserved	Reserved
16	C108/DTR	Reserved for HW flow control with GPIO
17	Reserved	Reserved
18	PWRMON	PWRMON from module
19	Reserved	Reserved
20	Reserved	Reserved
21	C109/DCD	Reserved for HW flow control with GPIO
22	GND	Ground
23	C125/RING	Reserved for HW flow control with GPIO
24	V180	1.8V supply
25	C107/DSR	Reserved for HW flow control with GPIO
26	Reserved	Reserved
27	Reserved	Reserved
28	Reserved	Reserved
29	VBATT_AUX	VBATT input to supply the Interface circuitry
30	Reserved	Reserved
31	C104/RXD1	Serial data output (RXD) to DTE (Secondary UART)
32	C103/TXD1	Serial data input (TXD) from DTE (Secondary UART)
33	TX_TRACE_EVB	To EVB 2.0

Pin	Signal	Function
34	RX_TRACE_EVB	To EVB 2.0
35	TX_AUX	Auxiliary UART (TX Data to DTE)
36	RX_AUX	Auxiliary UART (RX Data from DTE)
37	C103/TXD1	Serial data input (TXD) from DTE (Secondary UART)
38	C104/RXD1	Serial data output (RXD) to DTE (Secondary UART)
39	GPIO_04	General purpose IO #4
40	SIMIN1	SIM detect signal from EVB 2.0 SIM holder 1
41	C104/RXD	To EVB 2.0
42	C104/RXD0	Serial data output (RXD) to DTE (Main UART)
43	C104/RXD1	Serial data output (RXD) to DTE (Secondary UART)
44	C106/CTS1	Output for Clear to send signal (CTS) to DTE (Secondary UART)
45	C106/CTS0	Output for Clear to send signal (CTS) to DTE (Main UART)
46	C106/CTS	To EVB 2.0
47	C103/TXD	To EVB 2.0
48	C103/TXD0	Serial data input (TXD) from DTE (Main UART)
49	C103/TXD1	Serial data input (TXD) from DTE (Secondary UART)
50	C105/RTS1	Input for Request to send signal (RTS) from DTE (Secondary UART)
51	C105/RTS0	Input for Request to send signal (RTS) from DTE (Main UART)
52	C105/RTS	To EVB 2.0

There are Jumpers on this PL401 connector that permit to select the following:

- To connect the Main UART (UART0) to EVB 2.0 level translators (41-42, 45-46, 47-48, 51-52). This is the default jumper settings.
- To connect the Secondary UART (UART1) to the EVB 2.0 level translators (41-43, 44-46, 47-49, 50-52). Connected as default to EVB 2.0 UART3 with R210, R212, R213 and R214.
- To connect the Auxiliary UART to the EVB 2.0 AUX UART level translators (33-35 and 34-36)

In case is needed to connect an external application to the Main UART, Secondary UART, Auxiliary UART or simply to isolate them from the rest of the circuitry it is only needed to remove the jumpers.

Please refer to ANNEX 1 LE310X1 Interface TLB Schematic for interface Electric Diagrams and ANNEX 2 LE310X1 Interface TLB Components Layout for components layout.

9 ANNEX 1 LE310X1 Interface TLB Schematics

This section shows the detailed information of ANNEX 1 LE310X1 Interface TLB Schematics.

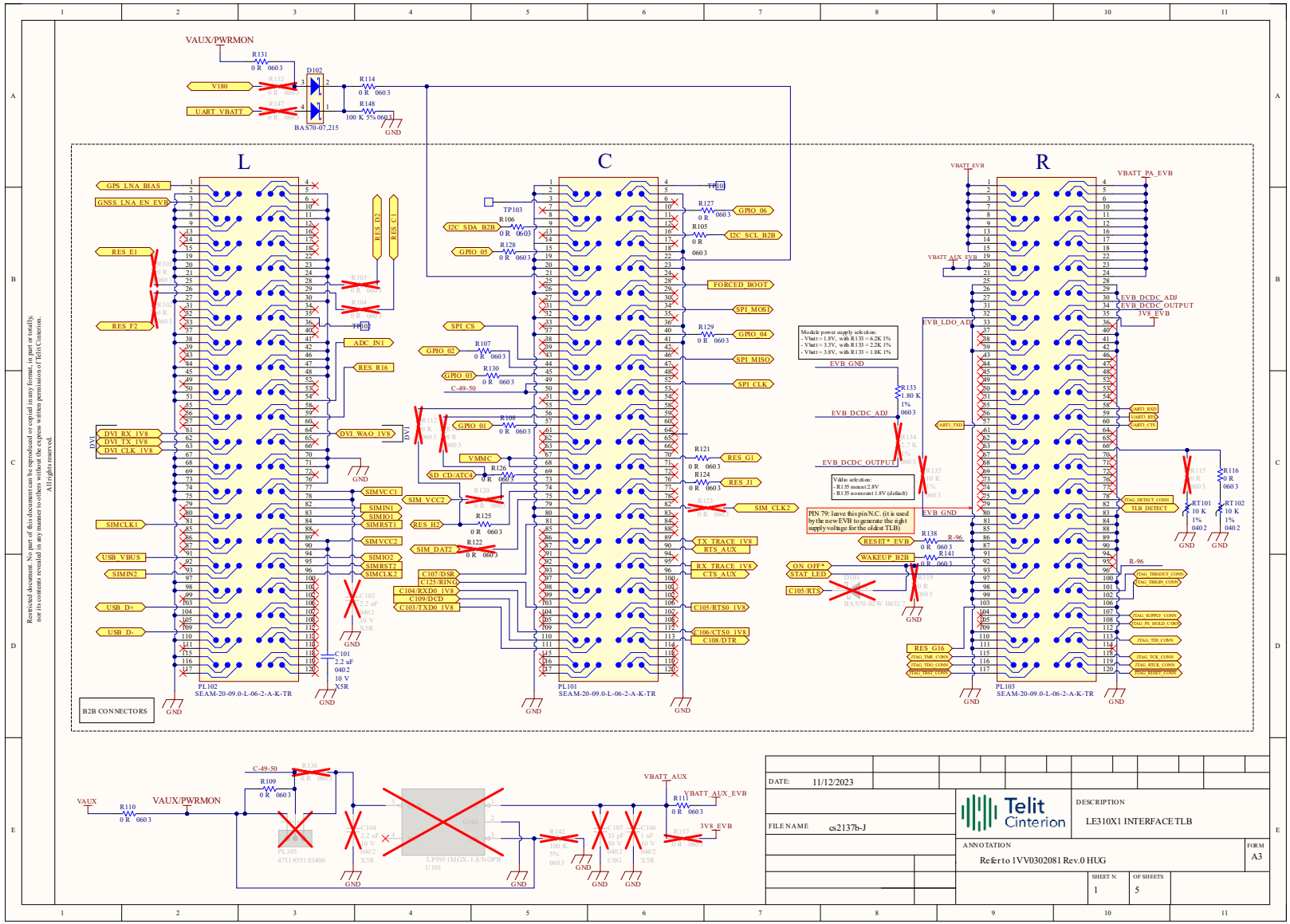

Figure 4: ANNEX 1 LE310X1 Interface TLB Schematic (1 of 5)

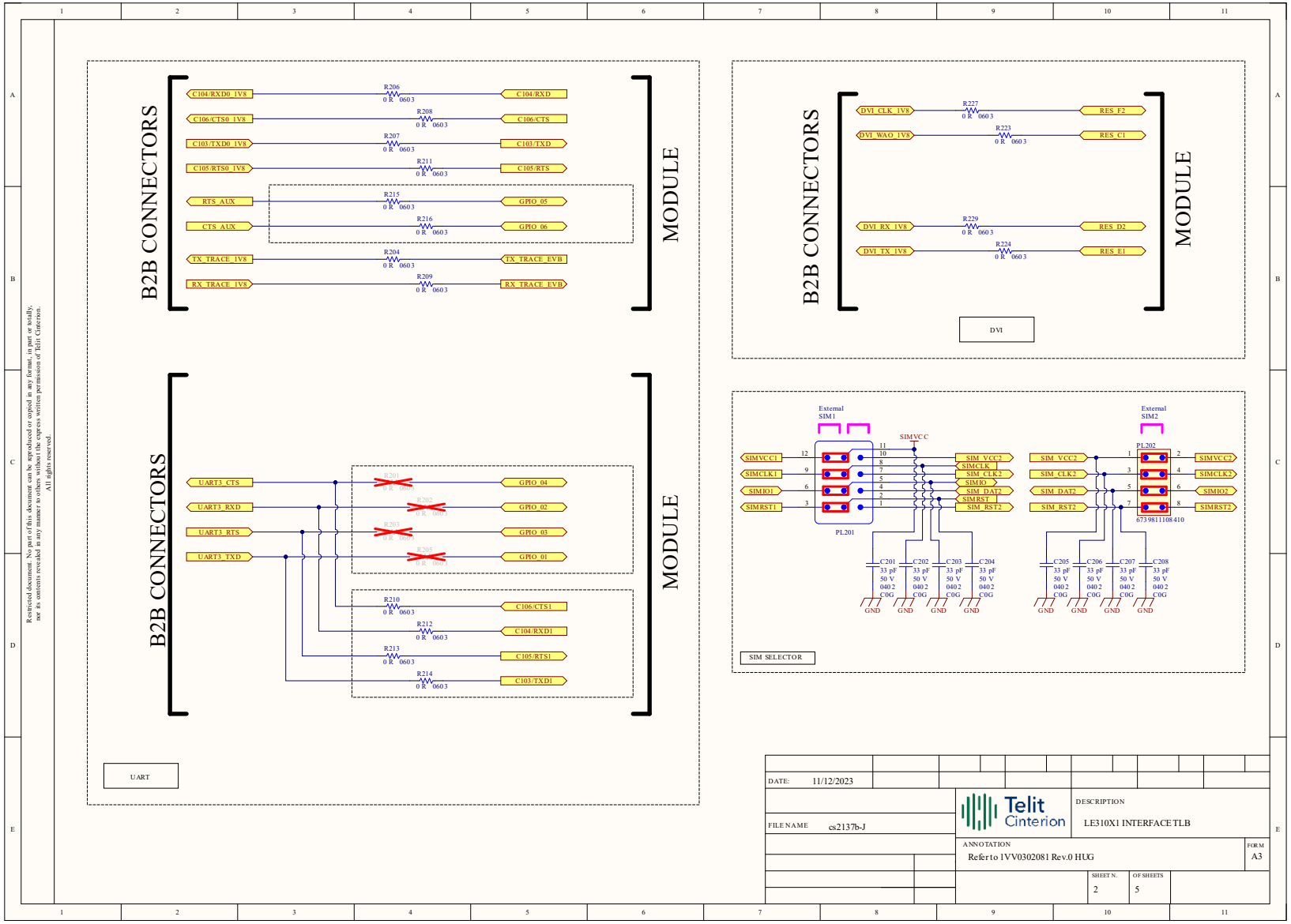

Figure 5: ANNEX 1 LE310X1 Interface TLB Schematic (2 of 5)

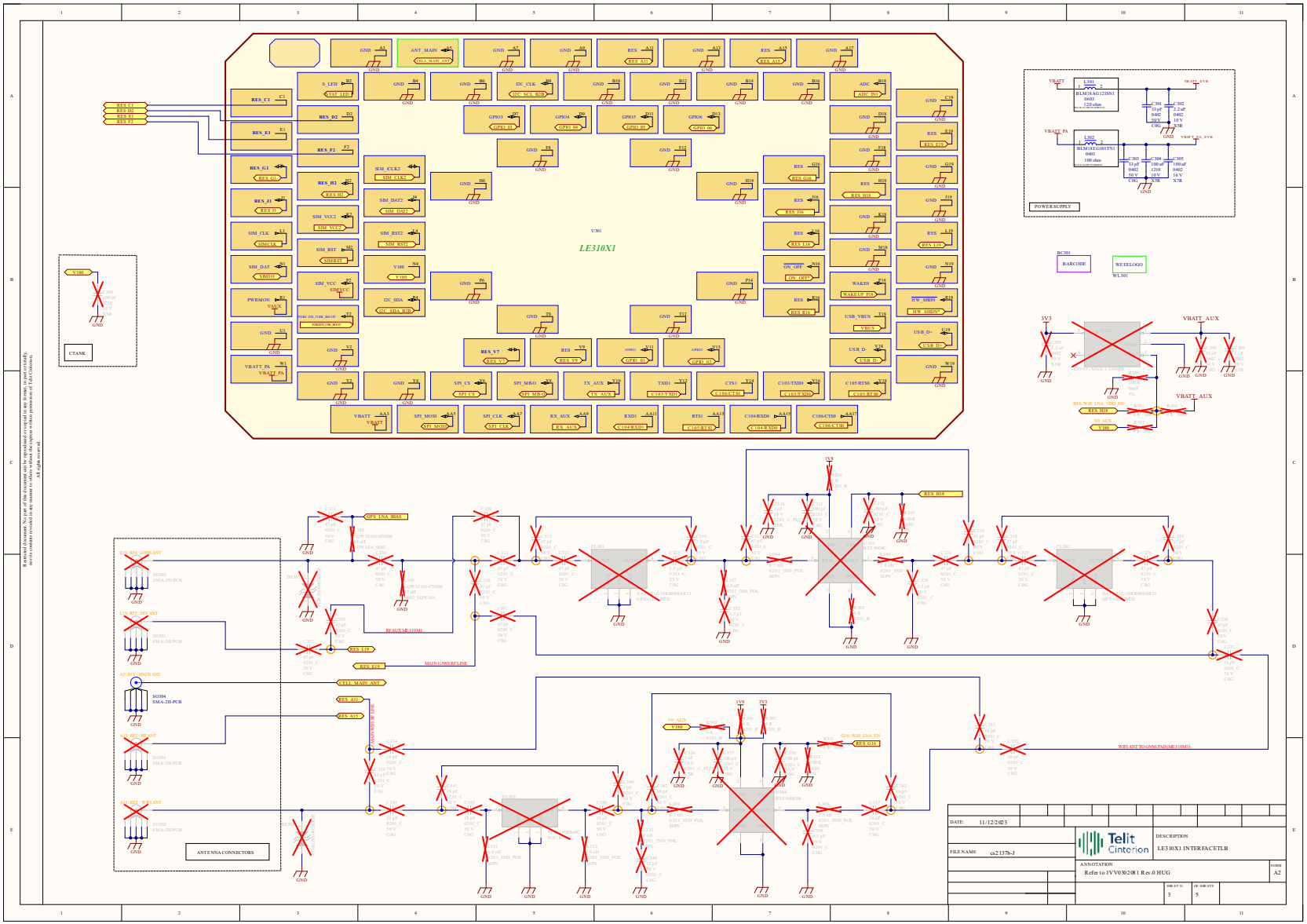

Figure 6: ANNEX 1 LE310X1 Interface TLB Schematic (3 of 5)

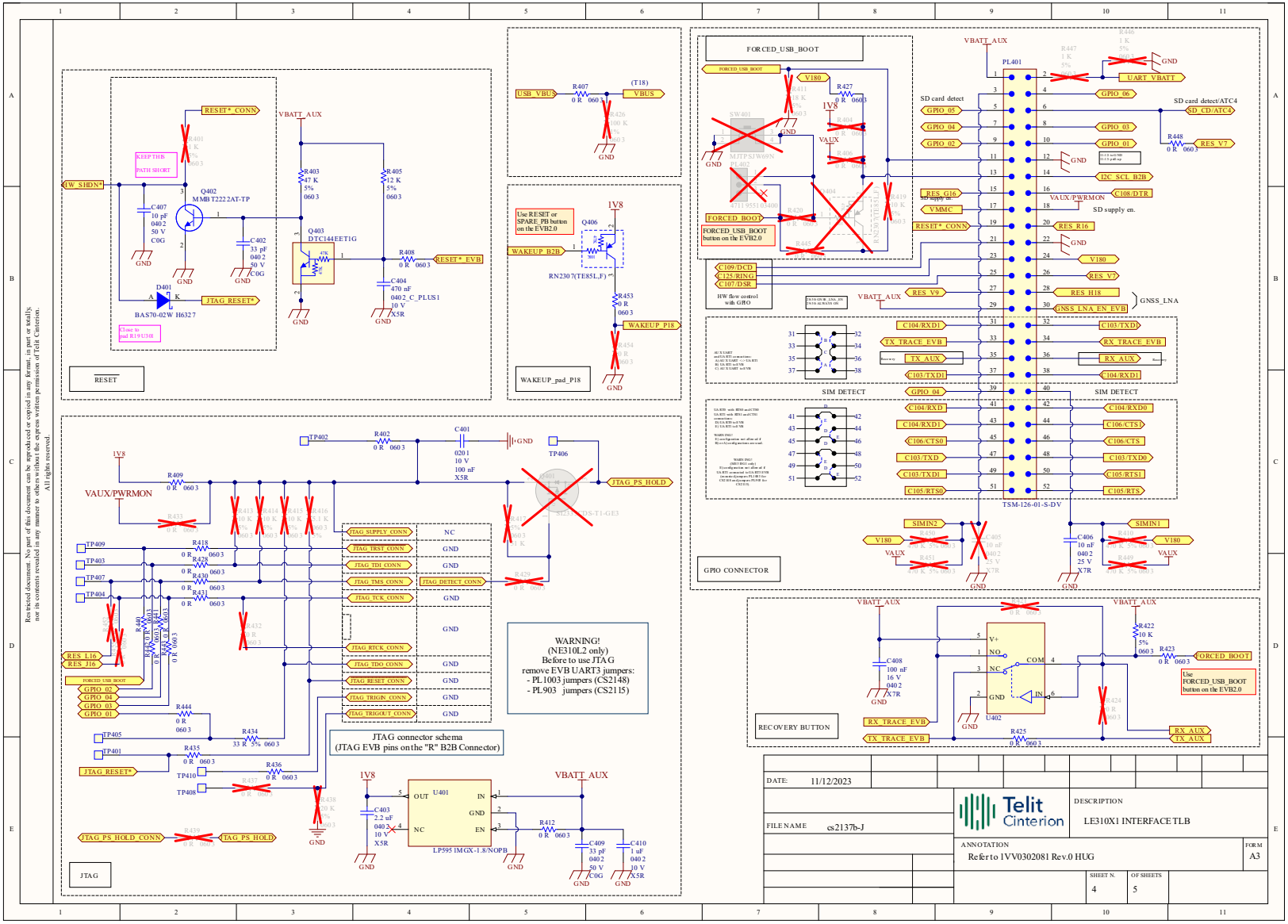

Figure 7: ANNEX 1 LE310X1 Interface TLB Schematic (4 of 5)

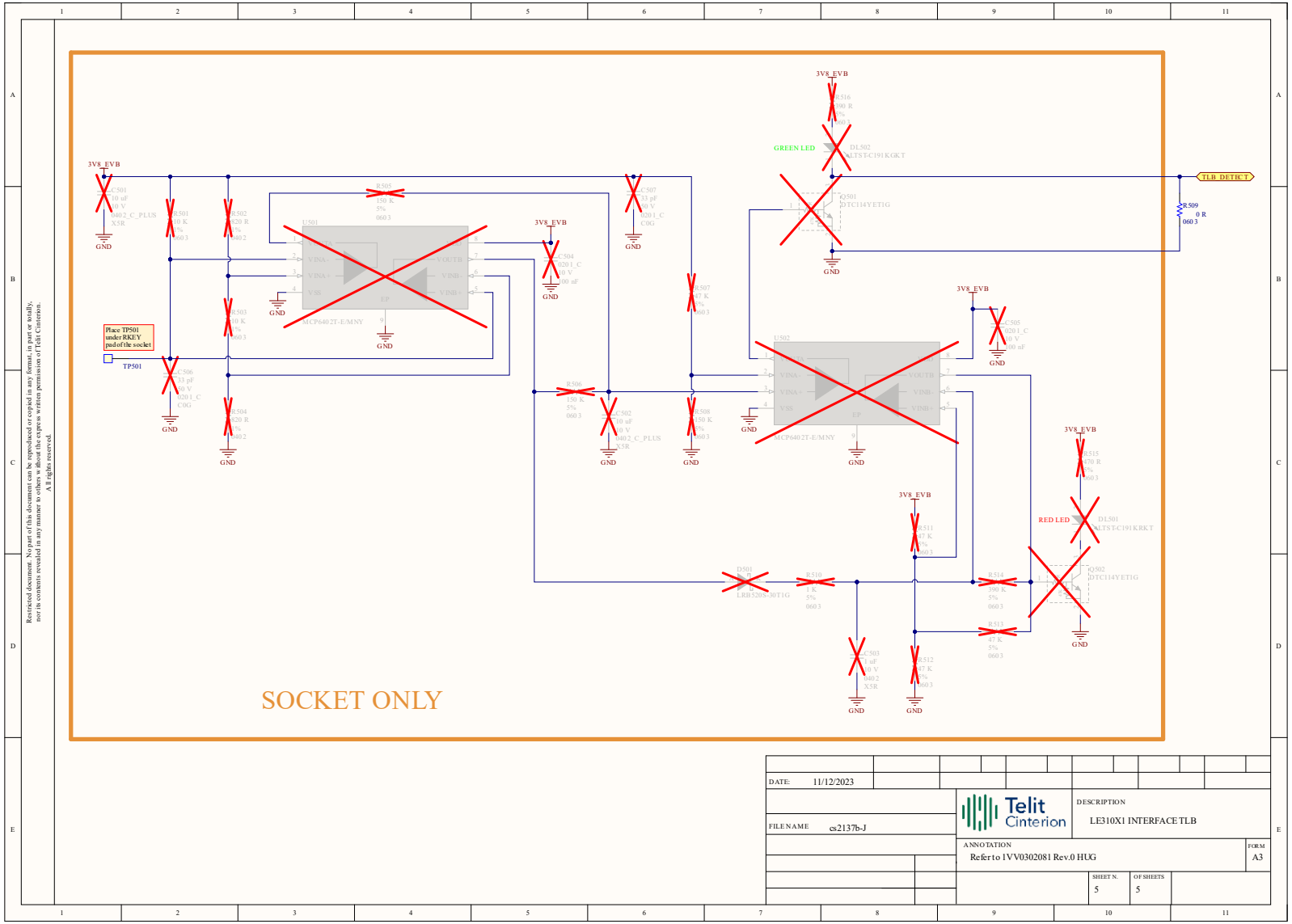

Figure 8: ANNEX 1 LE310X1 Interface TLB Schematic (5 of 5)

10 ANNEX 2 LE310X1 Interface TLB Components Layout

This section shows the detailed information of ANNEX 2 LE310X1 Interface TLB Components Layout.

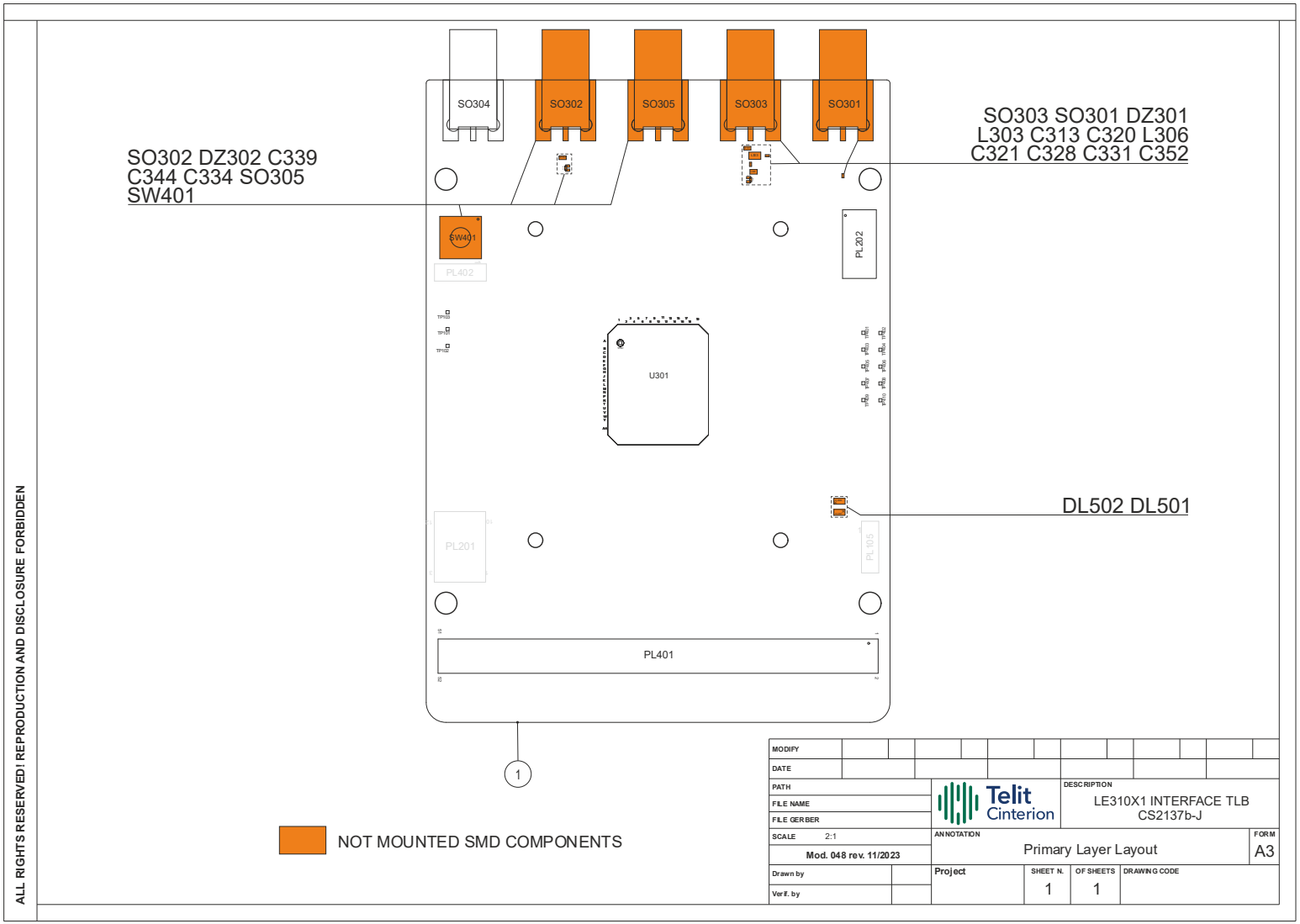

Figure 9: ANNEX 2 LE310X1 Interface TLB Components Layout (1 of 2)

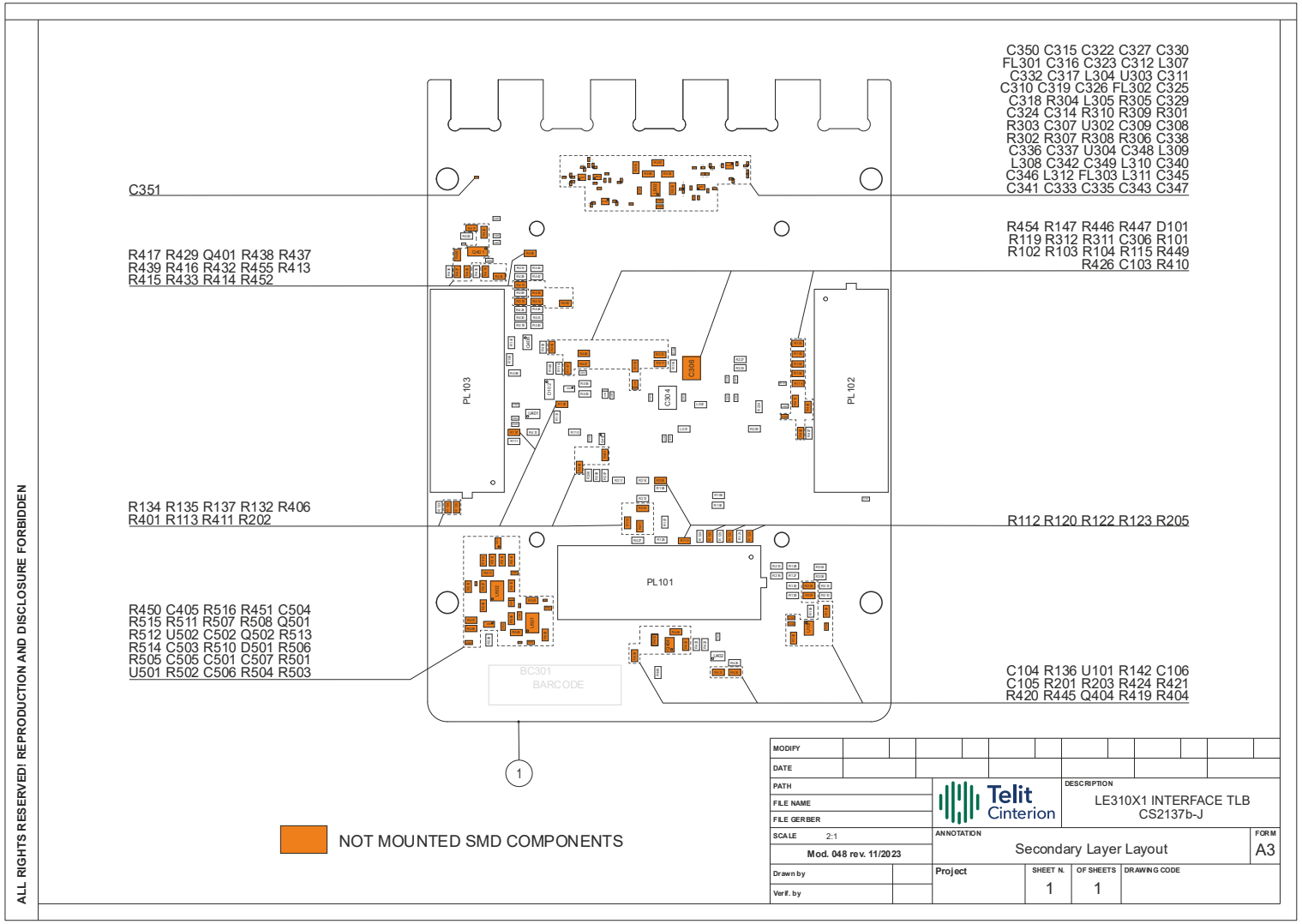

Figure 10: ANNEX 2 LE310X1 Interface TLB Components Layout (2 of 2)

11 Acronyms and Abbreviations

Table 9: Acronyms and Abbreviations

Acronym	Definition
TTSC	Telit Technical Support Centre
USB	Universal Serial Bus
HS	High Speed
DTE	Data Terminal Equipment
UMTS	Universal Mobile Telecommunication System
WCDMA	Wideband Code Division Multiple Access
HSDPA	High Speed Downlink Packet Access
HSUPA	High Speed Uplink Packet Access
UART	Universal Asynchronous Receiver Transmitter
HSIC	High Speed Inter Chip
SIM	Subscriber Identification Module
SPI	Serial Peripheral Interface
ADC	Analog – Digital Converter
DAC	Digital – Analog Converter
I/O	Input Output
GPIO	General Purpose Input Output
CMOS	Complementary Metal – Oxide Semiconductor
MOSI	Master Output – Slave Input
MISO	Master Input – Slave Output
CLK	Clock
MRDY	Master Ready
SRDY	Slave Ready
CS	Chip Select
RTC	Real Time Clock
PCB	Printed Circuit Board
ESR	Equivalent Series Resistance
VSWR	Voltage Standing Wave Radio
VNA	Vector Network Analyzer

12 Related Documents

For current documentation and downloads, refer to https://dz.telit.com/.

Table 10: Related Documents

S.no	Doc Code	Document Title
1	1VV0301774	Telit EVB 2.0 User Guide
2	1VV0302081	LE310X1 Hardware Design Guide
3	80861ST11253A	LE310X1 AT Commands Reference Guide

13 Document History

Table 11: Document History

Revision	Date	Changes
0	2026-01-14	Initial release

From Mod.0818 Rev.18

© Telit Cinterion. All rights reserved.

Technical Documentation