LE310X1

Hardware Design Guide

1VV0302081 Rev.2
2026-04-13
Released
Confidential

Technical Documentation

Contents

1 Applicability Table 5
2 Introduction 6
2.1 Scope 6
2.2 Audience 6
2.3 Contact Information, Support 6
2.4 Conventions 7
2.5 Terms and Conditions 7
2.6 Disclaimer 7
3 General Product Description 8
3.1 Overview 8
3.2 Product Variants and Frequency Bands 8
3.3 Main Features 8
3.4 Mechanical Specifications 9
3.4.1 Dimensions 9
3.4.2 Weight 9
3.5 Temperature Range 9
4 Pins Allocation 10
4.1 Pin-out 10
4.2 LGA Pads Layout 13
5 Power Supply 14
5.1 Power Supply Requirements 14
5.2 Power Consumption 15
5.2.1 Idle Mode 15
5.2.2 Connected Mode 16
5.3 General Design Rule 18
5.3.1 Electrical Design Guidelines 18
5.3.1.1 + 5V Input Source Power Supply – Design Guidelines 18
5.3.1.2 + 12V Input Source Power Supply – Design Guidelines 19
5.3.1.3 Battery Source Power Supply – Design Guidelines 20
5.3.2 Thermal Design Guidelines 21
5.3.3 Power Supply PCB Layout Guidelines 22
5.4 RTC Supply 23
5.5 PWRMON Power-on Monitor 23
6 Digital Section 24
6.1 Logic Levels 24
6.2 Power On 24
6.3 Power Off 25
6.3.1 Shutdown by Software 26
6.3.2 Hardware shutdown 26
6.3.3 Reset 27
6.4 Communication Ports 27
6.4.1 SPI 27
6.4.2 Serial Ports 28
6.4.2.1 Modem Serial Port (USIF0) 28
6.4.2.2 Secondary Modem Serial Port (USIF1) 29

6.4.2.3 Auxiliary Serial Port 30
6.5 General Purpose I/O 30
6.5.1 Using a GPIO as an INPUT 31
6.5.2 Using a GPIO as an OUTPUT 31
6.6 ADC Converter 31
6.6.1 Using ADC Converter 31
6.7 SIM Card Interface 32
6.8 Forced USB Boot 32
7 RF Section 33
7.1 TX Output Power 33
7.2 RX Sensitivity 33
7.3 Antenna Requirements 34
7.3.1 PCB Design Guidelines 34
8 Mechanical Design 36
8.1 Mechanical Drawing 36
9 Application PCB Design 37
9.1 Footprint 37
9.2 PCB Pad Design 40
9.3 Recommendations for PCB Pad Dimensions 40
10 Manufacturing 41
10.1 Stencil 41
10.2 Solder Paste 41
10.3 Solder Reflow 41
11 Packaging 43
11.1 Tray 43
11.2 Reel 47
11.3 Carrier Tape Detail 47
11.4 Reel Detail 48
11.5 Moisture Sensitivity 48
12 Conformity Assessment Issue 49
12.1 Approvals Summary 49
12.2 EMEA Approvals 49
12.2.1 EU RED 49
12.2.1.1 EU Declaration of Conformity 49
12.2.1.2 RED Antenna 50
12.3 Americas Approvals 50
12.3.1 USA FCC 50
12.3.1.1 FCC Certificates 50
12.3.1.2 Applicable FCC Rules 50
12.3.1.3 FCC Regulatory Notices 50
12.3.1.4 FCC Antenna Info 53
12.3.1.5 FCC Labelling Requirements for the Host Device 54
12.3.2 Brazil ANATEL 54
12.3.2.1 ANATEL Regulatory Notices 54
12.3.3 PERU MTC 55
12.3.3.1 MTC Regulatory Notices 55
12.3.4 Colombia CRC 55

12.3.4.1 CRC Regulatory Notices 55
12.3.5 Argentina RAMATEL 55
12.3.5.1 RAMATEL Regulatory Notices (former ENACOM) 55
13 Acronyms and Abbreviations 56
14 Related Documents 57
15 Document History 58

1 Applicability Table

Table 1: Applicability Table

Products
LE310X1-LA
LE310X1-EU

2 Introduction

2.1 Scope

This document introduces the Telit Cinterion LE310X1 module and presents possible and recommended hardware solutions for the development of a product based on this module. All the features and solutions described in this document apply to all LE310X1 variants listed in the applicability table.

This document cannot include every hardware solution or every product that can be designed. Where the suggested hardware configurations are not to be considered mandatory, the information provided should be used as a guide and starting point for the proper development of the product with the Telit Cinterion module.

2.2 Audience

This document is intended for system integrators that are using the Telit Cinterion LE310X1 module in their products.

2.3 Contact Information, Support

For technical support and general questions, e-mail:

- TS-EMEA@telit.com
- TS-AMERICAS@telit.com
- TS-APAC@telit.com
- TS-SRD@telit.com
- TS-ONEEDGE@telit.com

Alternatively, use: https://www.telit.com/contact-us/

For Product information and technical documents, visit: https://www.telit.com

2.4 Conventions

Note:	Provide advice and suggestions that may be useful when integrating the module.
Danger:	This information MUST be followed, or catastrophic equipment failure or personal injury may occur.
Warning:	Alerts the user on important steps about the module integration.

All dates are in ISO 8601 format, that is YYYY-MM-DD.

2.5 Terms and Conditions

Refer to https://www.telit.com/terms-conditions/.

2.6 Disclaimer

THE MATERIAL IN THIS DOCUMENT IS FOR INFORMATIONAL PURPOSES ONLY. TELIT CINTERION RESERVES THE RIGHT TO MAKE CHANGES TO THE PRODUCTS DESCRIBED HEREIN. THE SPECIFICATIONS IN THIS DOCUMENT ARE SUBJECT TO CHANGE AT THE DISCRETION OF TELIT CINTERION WITHOUT PRIOR NOTICE. THIS DOCUMENT IS PROVIDED ON “AS IS” BASIS ONLY AND MAY CONTAIN DEFICIENCIES OR INADEQUACIES. TELIT CINTERION DOES NOT ASSUME ANY LIABILITY FOR INFORMATION PROVIDED IN THE DOCUMENT OR ARISING OUT OF THE APPLICATION OR USE OF ANY PRODUCT DESCRIBED HEREIN.

TELIT CINTERION GRANTS A NON-EXCLUSIVE RIGHT TO USE THE DOCUMENT. THE RECIPIENT SHALL NOT COPY, MODIFY, DISCLOSE, OR REPRODUCE THE DOCUMENT EXCEPT AS SPECIFICALLY AUTHORIZED BY TELIT CINTERION.

TELIT CINTERION AND THE TELIT CINTERION LOGO, ARE TRADEMARKS OF TELIT CINTERION AND ARE REGISTERED IN CERTAIN COUNTRIES. ALL OTHER REGISTERED TRADEMARKS OR TRADEMARKS MENTIONED IN THIS DOCUMENT ARE THE PROPERTY OF THEIR RESPECTIVE OWNERS AND ARE EXPRESSLY RESERVED BY TELIT CINTERION (AND ITS LICENSORS).

3 General Product Description

3.1 Overview

The LE310X1 module is an LTE Cat.1bis communication product designed to provide IoT capabilities while maintaining low power consumption. Utilizing a single antenna, it reduces hardware design complexity and offers cost savings compared to LTE Cat.1bis modules with dual antennas. This design also allows for a reduction in overall device dimensions, making it suitable for IoT applications with stringent size requirements. The LE310X1 operates with GPIO voltage levels of 1.8V, ensuring low power consumption and making it an ideal solution for battery-powered applications and wearable devices.

3.2 Product Variants and Frequency Bands

The LE310X1 module supports LTE bands as listed in the following table.

Table 2: Product Variants and their Frequency Bands

Product	LTE Cat.1bis	WiFi Scan	Region
LE310X1-LA	B1, B2, B3, B4, B5, B7, B8, B28, B66	Supported	LATAM
LE310X1-EU	B1, B3, B7, B8, B20, B28, B38, B40, B41	Supported	EMEA

For detailed information about frequencies and bands, refer to the RF Section.

Note: Supported frequency range of B41 is from 2496MHz to 2690MHz.

3.3 Main Features

Table 3: Functional Features

Function	Features
Modem	LTE Cat.1bis technology (10/5Mbps DL/UL). SMS support (text and PDU) Real-Time Clock Internal IP stack
Interfaces	USB High Speed 2.0 Communication Port Asynchronous Serial Port USIF0 Main UART Asynchronous Serial Port USIF1 Auxiliary Serial Port I2C ADC SIM (2 SIM interfaces) 6 GPIOs Antenna port

3.4 Mechanical Specifications

3.4.1 Dimensions

The overall dimension of LE310X1 is:

Length: 18.0 ±0.25mm

Width: 15.0 ±0.25mm

Thickness: 2.4±0.20mm

3.4.2 Weight

The nominal weight of the LE310X1 is:

LE310X-LA: 1.28g

LE310X-EU:1.28g

3.5 Temperature Range

Table 4: Temperature Range

Mode	Temperature range	Note
Operating Temperature Range	Normal operation: –40℃ to +80℃	The module is fully functional(*) in all the temperature range, and it fully meets the 3GPP specifications, EU RED certification range.
	Extended operation: -40℃ to +80℃	The module is fully functional (*) in all the temperature range; it might slightly deviate from the 3GPP specifications.
Storage and non-operating Temperature Range	-40℃ to +80℃	The module is not powered and not connected to power supply.

*Functional: If applicable, the module can make and receive data calls, send and receive SMS, and handle data traffic.

4 Pins Allocation

4.1 Pin-out

Table 5: Pin-out Information

Pin	Signal	I/O	Function	Type	Comment
USB High Speed 2.0 Communication Port					
U19	USB_D+	I/O	USB differential Data (+)		
V18	USB_D-	I/O	USB differential Data (-)		
T18	USB_VBUS	I	USB power input		3.0V to 5.5V
Asynchronous Serial Port (USIF0) – Prog. / Data + HW Flow Control					
Y16	TXD0	I	Serial data input (TXD) from DTE.	CMOS 1.8V	
AA15	RXD0	O	Serial data output (RXD) to DTE.	CMOS 1.8V	
Y18	RTS0	I	Input for Request to send a signal (RTS) from DTE.	CMOS 1.8V	
AA17	CTS0	O	Output for Clear to send a signal (CTS) to DTE.	CMOS 1.8V	
Asynchronous Serial Port (USIF1) – Prog. / Data + HW Flow Control					
Y12	TXD1	I	Serial data input (TXD) from DTE.	CMOS 1.8V	
AA11	RXD1	O	Serial data output (RXD) to DTE.	CMOS 1.8V	
AA13	RTS1	I	Input for Request to send a signal (RTS) from DTE.	CMOS 1.8V	
Y14	CTS1	O	Output for Clear to send a signal (CTS) to DTE.	CMOS 1.8V	
Auxiliary Serial Port					
Y10	TX_AUX	O	Auxiliary UART (TX Data to DTE)	CMOS 1.8V	
AA9	RX_AUX	I	Auxiliary UART (RX Data to DTE)	CMOS 1.8V	
SIM card interfaces					
L1	SIM_CLK	O	External SIM signal – Clock	CMOS 1.8V/3.0V	
M2	SIM_RST	O	External SIM signal – Reset	CMOS 1.8V/3.0V	
N1	SIM_DAT	I/O	External SIM signal – Data I/O	CMOS 1.8V/3.0V	
P2	SIM_VCC	PO	Power supply for the SIM	1.8V/3.0V	VSIM Power Domain
G4	SIM_CLK2	O	External SIM signal –Clock2	CMOS 1.8V/3.0V	
L4	SIM_RST2	O	External SIM signal – Reset2	CMOS 1.8V/3.0V	
J4	SIM_DAT2	I/O	External SIM signal – Data I/O2	CMOS 1.8V/3.0V	
K2	SIM_VCC2	PO	Power supply for the SIM	1.8V/3.0V	VSIM Power Domain
SPI (for future release)					
AA5	SPI_MOSI	I/O	SPI MOSI	CMOS 1.8V	
Y8	SPI_MISO	I/O	SPI MISO	CMOS 1.8V	

Pin	Signal	I/O	Function	Type	Comment
AA7	SPI_CLK	I/O	SPI Clock	CMOS 1.8V	
Y6	SPI_CS	I/O	SPI Chip Select	CMOS 1.8V	
I2C					
B8	I2C_CLK	I/O	I2C Clock	CMOS 1.8V	External PU
R4	I2C_SDA	I/O	I2C Data	CMOS 1.8V	External PU
Digital IO					
V11	GPIO1	I/O	Configurable GPIO01	CMOS 1.8V	
V13	GPIO2	I/O	Configurable GPIO02	CMOS 1.8V	
D7	GPIO3	I/O	Configurable GPIO03	CMOS 1.8V	
D9	GPIO4	I/O	Configurable GPIO04	CMOS 1.8V	
D11	GPIO5	I/O	Configurable GPIO05	CMOS 1.8V	
D13	GPIO6	I/O	Configurable GPIO06	CMOS 1.8V	
ADC					
B18	ADC	I	Analog To Digital Converter Input.	A/D	
RF Section					
A5	CELL_MAIN_ANTENNA	I/O	Main Antenna (50 ohm)	RF	
Miscellaneous Functions					
B2	S_LED	O	Status LED	CMOS 1.8V	
N16	ON_OFF#	I	Power ON / Power OFF input	1.8V Tolerant	Active low
P18	WAKEUP		Wake-Up signal from DHx status	1.8V Tolerant	Mustn't PU during power on
T2	FORCED_USB_BOOT	I	Optional pin, connect to test point.	CMOS 1.8V	High effective
R1	PWRMON	O	Power ON Monitor	Power	
R19	HW_SHUTDOWN#	I	HW Unconditional Reset	1.8V Tolerant	
Power Supply					
W1	VBATT_PA	-	Main power supply	Power	
AA3	VBATT	-	Main power supply	Power	
N4	V180		Supply 1.95V power out	Power	
Ground (GND)					
A3	GND	-	Ground	Power	
A7	GND	-	Ground	Power	
A9	GND	-	Ground	Power	
A13	GND	-	Ground	Power	
A17	GND	-	Ground	Power	
B4	GND	-	Ground	Power	
B6	GND	-	Ground	Power	
B10	GND	-	Ground	Power	

Pin	Signal	I/O	Function	Type	Comment
B12	GND	-	Ground	Power	
B14	GND	-	Ground	Power	
B16	GND	-	Ground	Power	
C19	GND	-	Ground	Power	
D18	GND	-	Ground	Power	
F8	GND	-	Ground	Power	
F12	GND	-	Ground	Power	
F18	GND	-	Ground	Power	
G19	GND	-	Ground	Power	
H6	GND	-	Ground	Power	
H14	GND	-	Ground	Power	
J19	GND	-	Ground	Power	
K18	GND	-	Ground	Power	
M18	GND	-	Ground	Power	
N19	GND	-	Ground	Power	
P6	GND	-	Ground	Power	
P14	GND	-	Ground	Power	
T8	GND	-	Ground	Power	
T12	GND	-	Ground	Power	
U1	GND	-	Ground	Power	
V2	GND	-	Ground	Power	
W19	GND	-	Ground	Power	
Y2	GND	-	Ground	Power	
Y4	GND	-	Ground	Power	
RESERVED / Not Connected (NC)					
A11	RESERVED	-	RESERVED		
A15	RESERVED	-	RESERVED		
C1	RESERVED	-	RESERVED		
D2	RESERVED	-	RESERVED		
E1	RESERVED	-	RESERVED		
E19	RESERVED	-	RESERVED		
F2	RESERVED	-	RESERVED		
G1	RESERVED	-	RESERVED		
G16	RESERVED	-	RESERVED		
H2	RESERVED	-	RESERVED		
H18	RESERVED	-	RESERVED		
J1	RESERVED	-	RESERVED		
J16	RESERVED	-	RESERVED		
L16	RESERVED	-	RESERVED		
L19	RESERVED	-	RESERVED		

Pin	Signal	I/O	Function	Type	Comment
R16	RESERVED	-	RESERVED		
V9	RESERVED	-	RESERVED		

Warning: Reserved pins must not be connected.

4.2 LGA Pads Layout

Top View

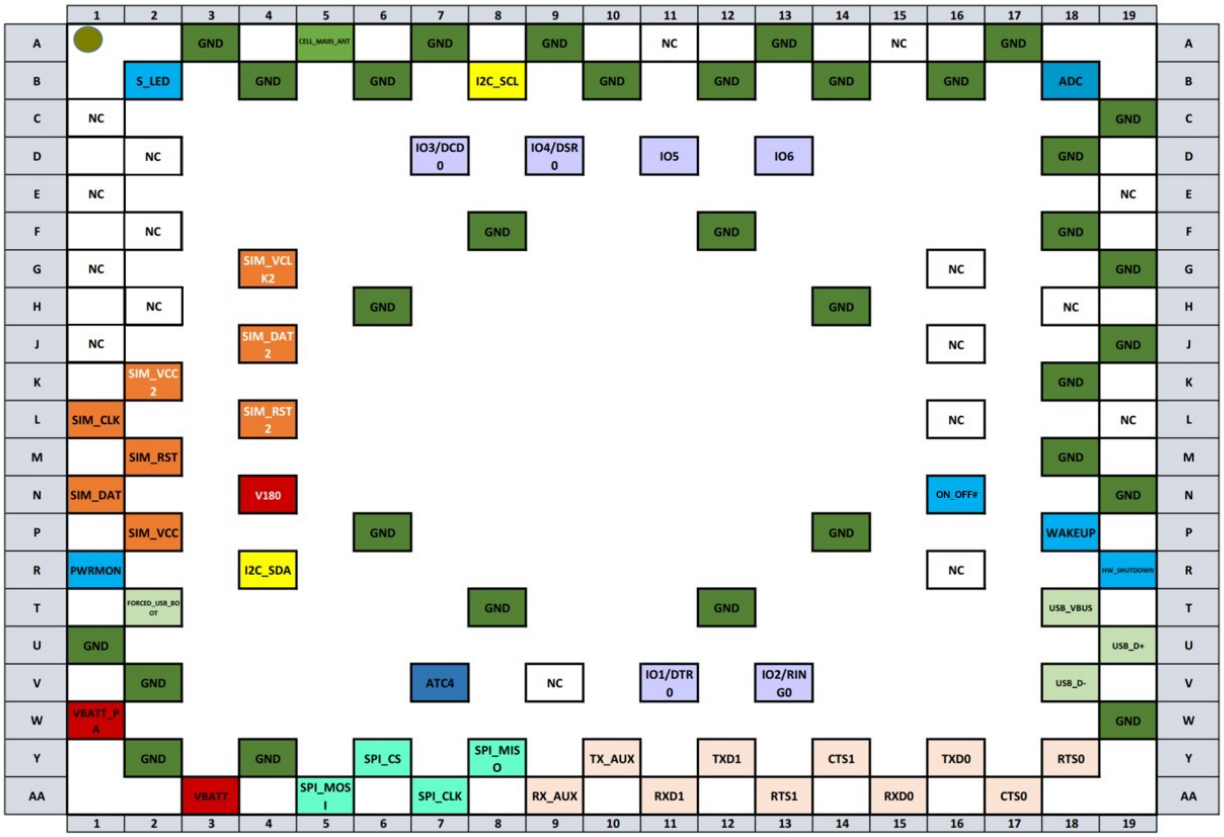

Figure 1: LGA Pads Layout

5 Power Supply

The power supply circuitry and the board layout are a very important part of the full product design and they strongly reflect on the product's overall performance, so the requirements and the guidelines that will follow should be read carefully for a proper design.

5.1 Power Supply Requirements

The external power supply must be connected to VBATT and VBATT_PA pads and must fulfil the following requirements:

Table 6: Power Supply Requirements

Power Supply	Value
Nominal Supply Voltage	3.8V
Operating Voltage Range	3.2V - 4.5V
Extended Voltage Range	3.2V - 4.5V

Warning: The supply voltage of the modem MUST never exceed the Extended Voltage Range. Improper implementation of the power supply guidelines described in this document can cause module failure.

Notes: For PTCRB approval on the final products, the power supply is required to be within the “Normal Operating Voltage Range”.

The power supply section of the application must be carefully designed to avoid an excessive voltage drop during transmission peak current absorptions. If the voltage drop is beyond the limits of the Extend Voltage Range, an unintentional module power-off can occur.

When powering on the modem, the voltage must be within the Extend Voltage Range.

The Hardware Design Guide specifications shall be fully acknowledged and implemented correctly to use the module in its Extend Voltage Range.

5.2 Power Consumption

The tables below represent the typical current consumption values for the LE310X1-LA and LE310X1-EU modules across various operational modes.

5.2.1 Idle Mode

Table 7: LE310X-LA Current Consumption in Idle Mode

Mode	Average (Typ.)	Mode Description
Switched Off		
Switched off	3.1µA	Module supplied but switched Off (RTC On)
Idle Mode (Standby mode; No data call in Progress; USB disconnected)		
AT+CFUN=1	2.58mA	DRX=0.32s
	1.87mA	DRX=0.64s
	1.51mA	DRX=1.28s
	1.34mA	DRX=2.56s
AT+CFUN=4	1.08mA	Disabled TX and RX; module is not registered on the network.
AT+CFUN=5	1.69mA	DRX= 0.32s
	0.96mA	DRX=0.64s
	0.59mA	DRX=1.28s
	0.41mA	DRX=2.56s

Table 8: LE310X-EU Current Consumption in Idle Mode

Mode	Average (Typ.)	Mode Description
Switched Off		
Switched off	2.9µA	Module supplied but switched Off (RTC On)
Idle Mode (Standby mode; No data call in Progress; USB disconnected)		
AT+CFUN=1	2.64mA	DRX=0.32s
	1.94mA	DRX=0.64s
	1.57mA	DRX=1.28s
	1.37mA	DRX=2.56s
AT+CFUN=4	1.12mA	Disabled TX and RX; module is not registered on the network.
AT+CFUN=5	1.68mA	DRX= 0.32s
	0.96mA	DRX=0.64s
	0.60mA	DRX=1.28s
	0.41mA	DRX=2.56s

Notes: The worst- and best-case current consumption values depend on network configuration and are not controlled by the module.

The electrical design for the power supply must ensure a peak current output of at least 1.0A. The support of specific network wireless technology depends on the product variant configuration.

5.2.2 Connected Mode

Table 9: LE310X-LA Current Consumption in Connected Mode

Mode	Band	Measure (Typical)		Mode Description
Connected Mode	Operation Band	Average (mA)	Peak (mA)	
Cat.1bis (max power)	Band 1	537.07	577.04	LTE Cat.1bis, mid channel, channel BW 10 MHz, QPSK, RB=12, Tx = Max power, at 25℃ and 3.8V
	Band 2	533.72	581.75	
	Band 3	611.54	637.29	
	Band 4	538.77	568.35	
	Band 5	497.20	530.33	
	Band 7	515.59	539.64	
	Band 8	507.86	537.20	
	Band 28	555.94	593.49	
	Band 66	610.00	630.00	
	Band 1	425.90	532.20	LTE Cat.1bis, mid channel, channel BW 20 MHz, RB=Full RB, Tx = Max power with FTP TpT session LTE to USB 10Mbps DL/5Mbps UL, at 25℃ and 3.8V
	Band 2	411.45	521.40	
	Band 3	452.10	553.90	
	Band 4	431.90	524.50	
	Band 5	N.A.	N.A.	
	Band 7	459.15	560.20	
	Band 8	N.A.	N.A.	
	Band 28	468.70	528.50	
	Band 66	457.20	566.30	
Cat.1bis (0 dBm)	Band 1	167.97	188.62	LTE Cat.1bis, mid channel, channel BW 10 MHz, QPSK, RB=12, Tx = 0 dBm, at 25℃ and 3.8V
	Band 2	169.68	193.24	
	Band 3	172.05	190.20	
	Band 4	171.11	194.26	
	Band 5	170.31	192.92	
	Band 7	182.36	203.48	
	Band 8	168.85	192.46	
	Band 28	168.78	192.67	
	Band 66	171.99	193.35	
	Band 1	153.55	174.50	LTE Cat.1bis, mid channel, channel BW 20 MHz, RB=Full RB, Tx = 0 dBm with FTP TpT session LTE to
	Band 2	151.85	170.10	
	Band 3	153.95	171.40	
	Band 4	154.45	173.30	

Mode	Band	Measure (Typical)		Mode Description
	Band 5	N.A.	N.A.	USB 10Mbps DL/5Mbps UL, at 25℃ and 3.8V
	Band 7	174.40	198.30	
	Band 8	N.A.	N.A.	
	Band 28	155.25	172.80	
	Band 66	155.45	176.50	

Table 10: LE310X-EU Current Consumption in Connected Mode

Mode	Band	Measure (Typical)		Mode Description
Connected Mode	Operation Band	Average (mA)	Peak (mA)	
Cat.1bis (max power)	Band 1	518.90	548.73	LTE Cat.1bis, mid channel, channel BW 10 MHz, QPSK, RB=12, Tx = Max power, at 25℃ and 3.8V
	Band 3	598.43	617.83	
	Band 7	524.93	546.25	
	Band 8	504.42	525.64	
	Band 20	515.38	534.97	
	Band 28	559.67	582.08	
	Band 38	250.62	674.34	
	Band 40	253.87	690.50	
	Band 41	250.32	667.01	
	Band 1	425.90	532.20	LTE Cat.1bis, mid channel, channel BW 20 MHz, RB=Full RB, Tx = Max power with FTP TpT session LTE to USB 10Mbps DL/5Mbps UL, at 25℃ and 3.8V
	Band 3	452.10	553.90	
	Band 7	459.15	560.20	
	Band 8	N.A.	N.A.	
	Band 20	417.35	526.70	
	Band 28	468.70	528.50	
	Band 38	155.70	561.40	
	Band 40	154.60	555.20	
	Band 41	156.05	560.40	
Cat.1bis (0 dBm)	Band 1	166.14	191.50	LTE Cat.1bis, mid channel, channel BW 10 MHz, QPSK, RB=12, Tx = 0 dBm, at 25℃ and 3.8V
	Band 3	169.61	189.27	
	Band 7	184.80	207.95	
	Band 8	168.35	188.52	
	Band 20	168.00	185.93	
	Band 28	169.19	187.20	
	Band 38	115.63	218.70	
	Band 40	114.54	218.74	
	Band 41	115.29	222.37	
	Band 1	153.55	174.50	LTE Cat.1bis, mid channel, channel BW
	Band 3	153.95	171.40	

Mode	Band	Measure (Typical)		Mode Description
	Band 7	174.40	198.30	20 MHz, RB=Full RB, Tx = 0 dBm with FTP TpT session LTE to USB 10Mbps DL/5Mbps UL, at 25℃ and 3.8V
	Band 8	N.A.	N.A.	
	Band 20	158.05	172.90	
	Band 28	155.25	172.80	
	Band 38	89.45	172.80	
	Band 40	88.20	175.50	
	Band 41	88.90	174.50	

Notes: Band5 and Band8 don't support channel bandwidth of 20MHz.

For FTP test of TDD bands, throughput is 8.237 Mbps DL / 1.032Mbps UL with uplink-downlink configuration 2 according to 3GPP.

5.3 General Design Rule

The main guidelines for the Power Supply Design include three different design steps:

- The electrical design of the power supply
- The thermal design
- The PCB layout

5.3.1 Electrical Design Guidelines

The electrical design of the power supply strongly depends on the power source where this power is drained. Power sources can be divided into three categories:

- +5V input (typically PC internal regulator output)
- +12V input (typically automotive)
- Battery

5.3.1.1 + 5V Input Source Power Supply – Design Guidelines

The desired output for the power supply is 3.8V. So, the difference between the input source and the desired output is not great and therefore a linear regulator can be used. When using a linear regulator, a proper heat sink shall be provided to dissipate the generated heat.

A switching power supply is preferred to increase power efficiency.

In case you decide to adopt a switching regulator, we suggest selecting a synchronous type, despite the little increase in price, you will enjoy many advantages (you don't need the external diode, the EMC design is generally easier, the efficiency rises from typ. 82%

to typ. 93%, the switching frequency will be much higher thus allowing smaller/cheaper inductor and output filter and presenting a lower output impedance)

When the power supply output impedance is not low enough to prevent voltage drops during absorption peaks a low ESR bypass capacitor of adequate capacity is recommended. A 100 µF capacitor is usually suitable on both VBATT and VBATT_PA power lines (check that this value of output capacitor is within the acceptable range of the voltage regulator you decided to use).

Make sure that the low ESR capacitor on the power supply output is rated at least 10V.

In case a polarity inversion is not prevented in other way, a protection diode placed near the power input could help to protect the module.

Figure 2: Example of Linear Regulator with 5V Input shows an example of a linear regulator with 5V input.

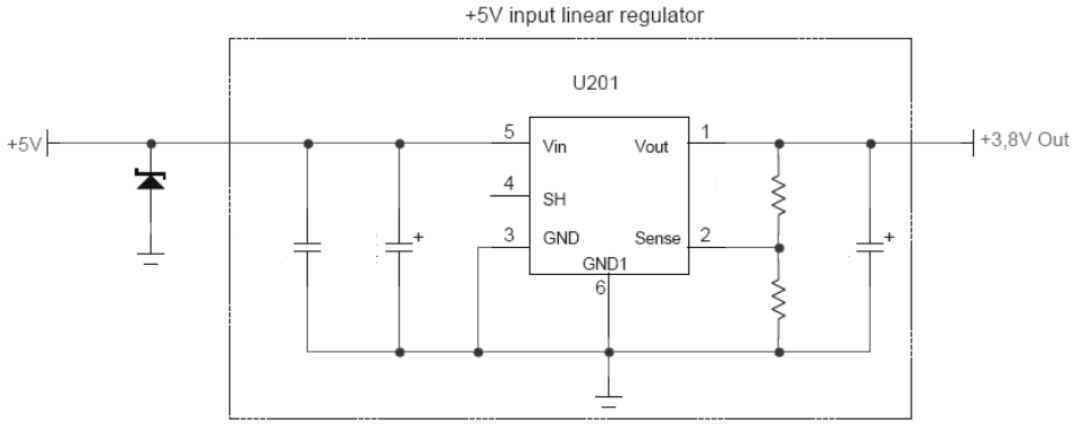

Figure 2: Example of Linear Regulator with 5V Input

5.3.1.2 + 12V Input Source Power Supply – Design Guidelines

- The desired output for the power supply is 3.8V. Due to the large difference between the input source and the desired output, a linear regulator is unsuitable and must not be used. A switching power supply is preferable for its better efficiency.
- When using a switching regulator, a 500-kHz or higher switching frequency regulator is preferable because of its smaller inductor size and its faster transient response. This allows the regulator to respond quickly to the peak current consumption.
- In any case, the selection of the frequency and switching design is related to the application to be developed as the switching frequency can also generate EMC interference.
- For car batteries (lead-acid accumulators) the input voltage can rise up to 15.8V. This must be kept in mind when choosing components: all components in the power supply must withstand this voltage.

- A bypass low ESR capacitor of adequate capacity must be provided to cut the current absorption peaks. A 100µF capacitor is usually suitable on VBATT & VBATT_PA power lines.
- Make sure that the low ESR capacitor on the power supply output is rated at least 10V.
- For automotive applications, a spike protection diode must be inserted close to the power input to clean the supply of spikes.
- A protection diode must be inserted close to the power input to protect the module from power polarity inversion. This can be the same diode as for spike protection.

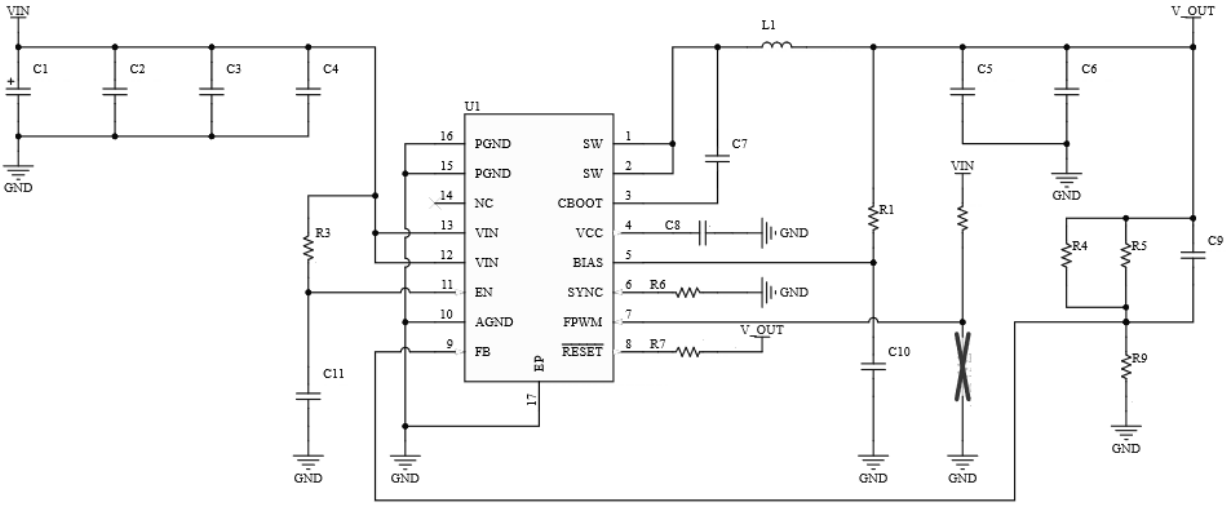

Figure 3: Example of Switching Regulator with 12V Input

5.3.1.3 Battery Source Power Supply – Design Guidelines

- The desired nominal output for the power supply is 3.8V, and the maximum voltage allowed is 4.5V. Hence, a single 3.7V Li-Ion cell battery type is suitable for supplying the power to the module.
- LiFePO4 batteries with 3.2V nominal voltage range between 2.5V (0% charge) and 3.65V (100% charge), therefore they are not an optimal choice for direct powering the modem. In case you are using a LiFePO4 battery, you can add a boost converter to supply the modem with nominal 3.8V. Note that a buck-boost converter is mandatory if the voltage can exceed 4.5 V.
- Primary Lithium batteries such as LiSOCl2 batteries have 3.6V nominal voltage but generally they have high internal resistance and the voltage drop during current absorption peaks is high and can exceed the operating range of the modem, especially when battery is partially depleted. Bobbin types are more affected by this drop than spiral types. You should carefully evaluate the voltage drop during modem operation and, in case, either add a DCDC converter to boost the voltage inside the modem operating range or add capacitance to supply the current peaks. Some LiSoCl2 batteries come already paired with a hybrid layer capacitor to support high current peaks without too much voltage drop.

Note: Do not use any Ni-Cd, Ni-MH, and Pb battery pack types directly connected to the LE310X1 module. Their use can lead to overvoltage on the module and damage it.

- A bypass low ESR capacitor of adequate capacity helps to cut the current absorption peaks; a 47-100µF capacitor is usually suitable.
- Make sure the low ESR capacitor is rated at least 10V.
- A protection diode should be inserted close to the power input to protect the module from power polarity inversion. Otherwise, the battery connector should be done in a way to avoid polarity inversions when connecting the battery.
- The battery capacity must be at least 600 mAh to withstand the current request while communicating at @23dBm nominal RF power.

5.3.2 Thermal Design Guidelines

The thermal design for the power supply heat sink should be done with the following specifications:

- Considering the very low current during Idle, especially if the Power Saving function is enabled, it is possible to consider from the thermal point of view that the device absorbs significant current only during a Data session.
- In LTE mode, the LE310X1 emits RF signals continuously during transmission. Therefore, special attention must be paid on how to dissipate the heat generated.
- The LE310X1 is designed to conduct the heat flow from the module IC's towards the bottom of the PCB across GND metal layers
- The generated heat is mostly conducted to the grounding plane under the LE310X1 module. The application board should be properly designed to dissipate this heat.
- The design of the application board must ensure that the area under the LE310X1 module is as large as possible. Make sure the LE310X1 is mounted on the large ground area of application board and provides plenty of ground vias to dissipate heat.

Notes: Make PCB design to have the best connection of GND pads to large surfaces of copper.

The average consumption during transmission depends on the power level at which the device is requested to transmit over the network. Therefore, the average current consumption varies significantly.

The thermal design for the power supply should be made keeping an average consumption at maximum transmission level during data transmission of LTE.

The LE310X1 includes a function to prevent overheating.

5.3.3 Power Supply PCB Layout Guidelines

As seen in the guidelines for electrical design, the power supply shall have a low ESR capacitor on the output to cut the current peaks on the input, to protect the supply from spikes. The placement of this component is crucial for the correct working of the circuitry. A misplaced component can be useless or can even decrease the power supply performance.

- The low ESR Bypass capacitor must be placed near the LE310X1 power input pads or, if the power supply is of the switching type, it can be placed near the inductor to cut the ripple, provided that the PCB trace from the capacitor to the LE310X1 is wide enough to limit voltage drops during 1A current peak. Try to keep supply rail traces as short and as wide as possible.
- The protection diode must be placed close to the input connector where the power source is drained.
- To reduce EMI due to switching, it is important to keep the mesh involved very small; then the input capacitor, the output diode (if not incorporated into the IC) and the regulator will form a very small loop. This is done to reduce the radiated field (noise) at the switching frequency and its harmonics (usually 100-500 kHz).
- The placement of the power supply on the board must be done in such a way as to guarantee that the high current return paths in the ground plane do not overlap with noise-sensitive circuitry such as the microphone amplifier/buffer or the earphone amplifier.
- Power supply input cables should be kept separate from noise-sensitive lines such as microphone/earphone cables.
- The insertion of the EMI filter on the VBATT pins is recommended in those designs where the antenna is placed near batteries or power supply lines. For this purpose, a Murata BLM18EG101TN1 or Taiyo Yuden P/N FBMH1608HM101 ferrite bead can be used.

The below figure shows the recommended circuit:

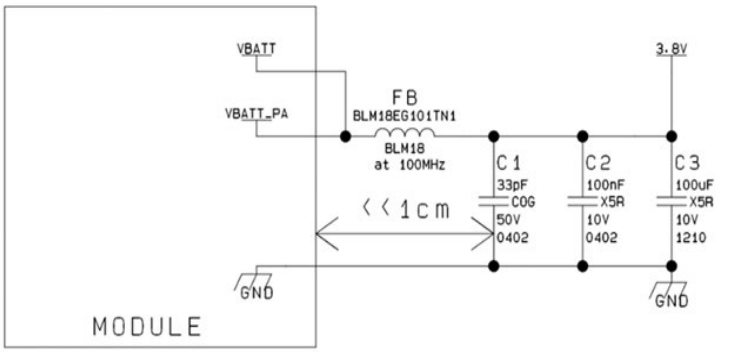

Figure 4: Recommended Circuit

5.4 RTC Supply

RTC is operational when the LE310X1 is in PSM or OFF state and VBATT pin is supplied. RTC settings are lost when the VBATT supply is removed.

5.5 PWRMON Power-on Monitor

PWRMON is always active (output high) when the module is powered ON (module powered ON indication) and cannot be set to a LOW level by any AT command.

This signal is present on pin R1. The operating range characteristics of the PWRMON signals are:

Table 11: Operating range characteristics of the PWRMON signals

Output voltage	-	1.9V	1.98V
Output current	-	30mA	50mA

Warning: This signal can be used to supply small devices (ie. Signal voltage level translators) from the module if the power budget defined in the previous table is not violated.

Note: The Output Current MUST never be exceeded; care must be taken when designing the application section to avoid excessive current consumption. If the Current exceeds the limits, it may cause a module shutdown.

6 Digital Section

6.1 Logic Levels

All the interface circuits of the LE310X1 are 1.8V CMOS logic. The following table shows the logic specifications used in the LE310X1 interface circuit.

Table 12: Logic Levels Minimum and Maximum

Parameter	Min	Max
Input level on any digital pin (CMOS 1.8) when on	-0.3V	+3.6V

6.2 Power On

The module can be turned on by driving ON_OFF# pad low for 520–3520 ms, and default time is 520 ms. It is recommended to use an open drain/collector driver to control the ON_OFF# pad.

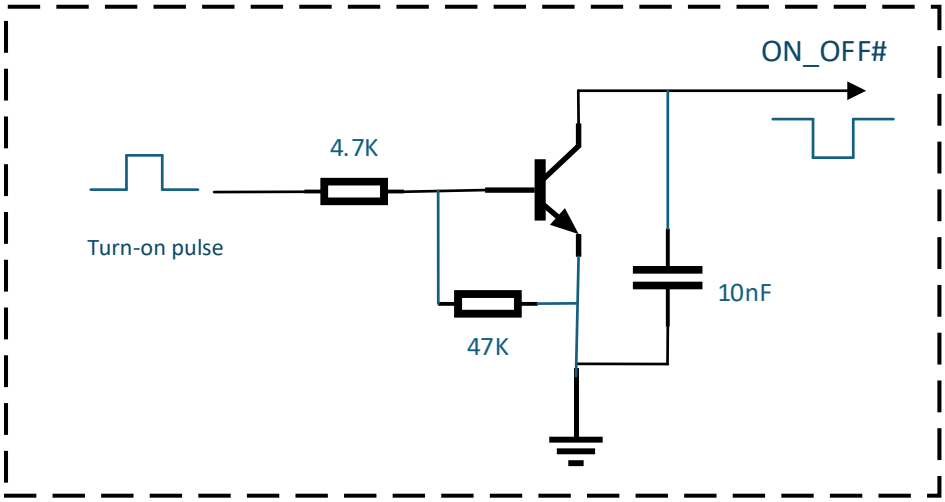

Figure 5: Power-on Circuit

Another way to control the ON_OFF# is using a push button. As electrostatic strike may be generated from the finger touching when the button is pressed, a TVS component is indispensable to be placed near the button for ESD protection. A reference circuit is illustrated in the following figure.

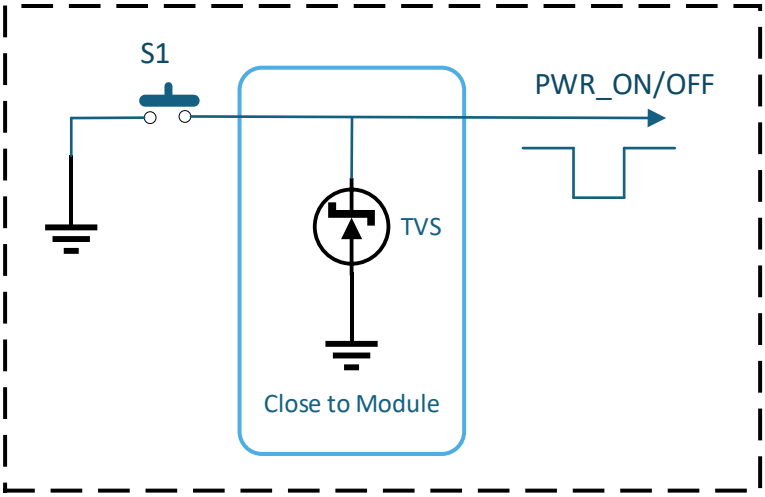

Figure 6: Turn on the Module with a Push Button

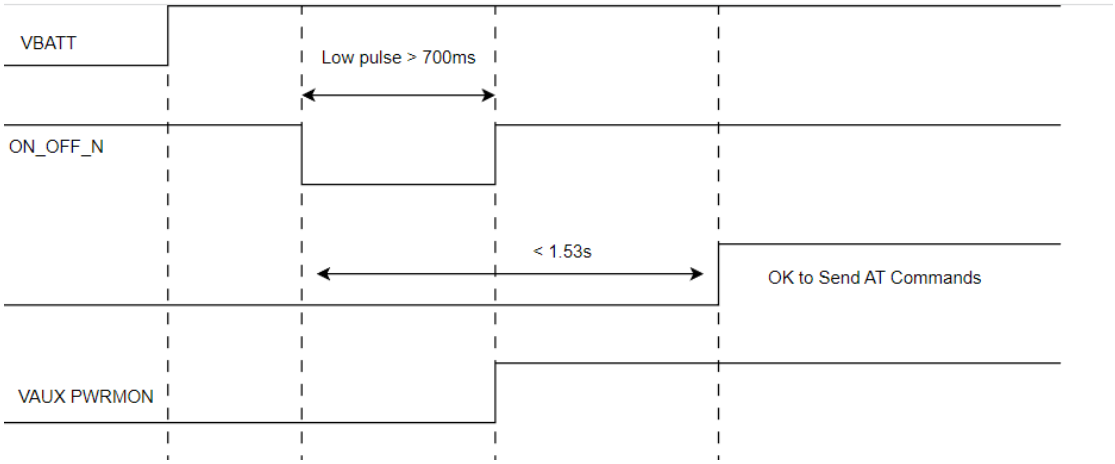

Figure 7: Power ON Sequence

6.3 Power Off

Turning off the device can be done in two ways:

Software shutdown via AT command (see LE310X1 Software User Guide, AT#SHDN)

Hardware shutdown using ON_OFF# pad

Notes: To avoid corrupting the data in the internal flash, do not cut off the power supply when the module is working. Only after the module is turned off with ON_OFF#, fast shutdown function, or AT command, can the power supply be cut off.

While turning off the module via AT command, keep ON_OFF# at high level after the execution of the command, otherwise the module will be turned on again after it turns off.

6.3.1 Shutdown by Software

The LE310X1 module can be shutdown via AT command.

When a shutdown command is sent, the LE310X1 enters the Finalization state, and at the end of the finalization process shuts down PWRMON.

The duration of the Finalization state may vary depending on the current situation of the module, so it is not possible to define a value.

Usually, it will take less than 20 milliseconds from sending a shutdown command until a complete shutdown is achieved. The DTE host should monitor the PWRMON status to observe the actual power-off.

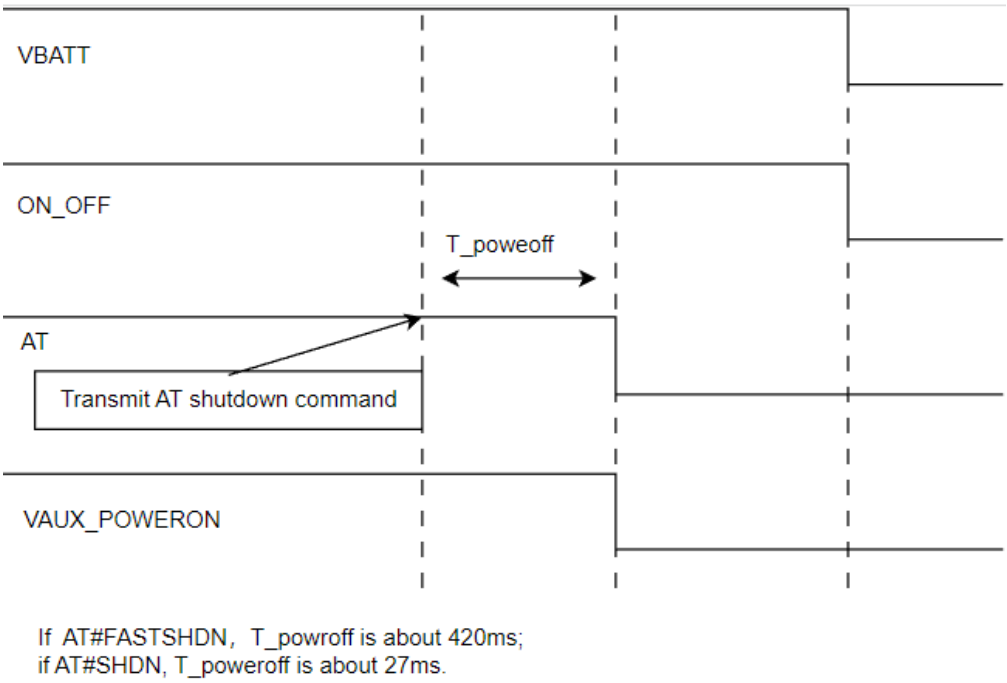

Figure 8: Power Off by Software Command

6.3.2 Hardware shutdown

To turn off the module, the ON_OFF# pad must be asserted low for more than 1 second, and then released. When the hold time of ON/OFF_N is more than 1 second, the module enters the Finalization state and finally shutdown PWRMON.

The duration of the Finalization may vary depending on the current situation of the module, so it is not possible to define a value. Usually, it will take less than 15 milliseconds issuing a shutdown command until a complete shutdown is achieved. The DTE host should monitor the PWRMON status to observe the actual power-off.

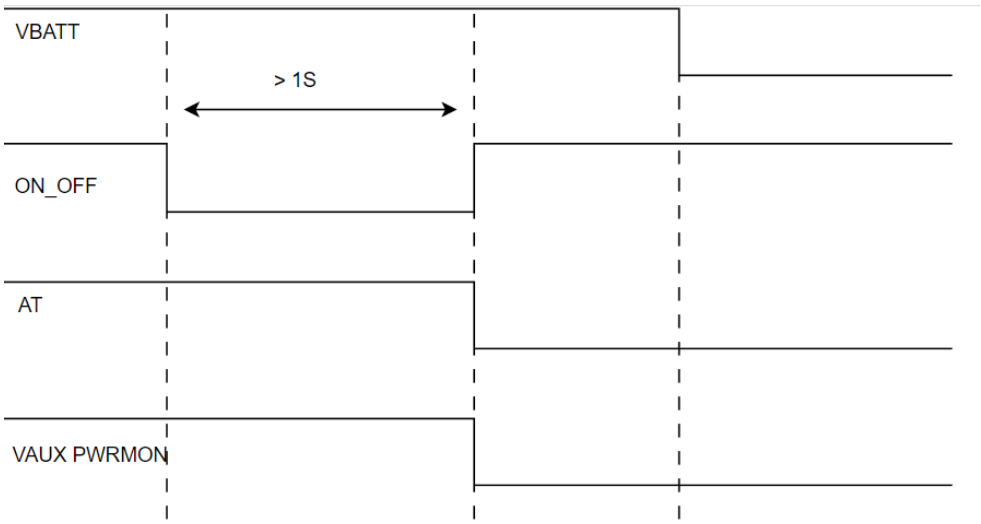

Figure 9: Hardware Shutdown

6.3.3 Reset

The LE310X1 module provides an active low HW_SHUTDOWN# pin. This signal acts as a reset of the baseband and supply section, and if held low for more than 256ms, completely discharges internal power rails performing the same functionality of an unconditional shutdown. Releasing the HW_SHUTDOWN# pin will immediately initiate the power up procedure regardless of the state of the ON_OFF# signal. The module will not perform any disconnection procedure from the network and will reset regardless of its operational status.

HW_SHUTDOWN# is an active low signal whose voltage level should always be in the range 1.5V / 0V and be driven in open-drain or open-collector configuration with no required external pull-up resistor.

6.4 Communication Ports

6.4.1 SPI

The LE310X1 Module is provided by a standard 4-wire SPI master or slave interface with chip select control. The following table lists the available signals:

Table 13: Available Signals

PAD	Signal	I/O	Function	Type	NOTE
AA5	SPI_MOSI	I/O	SPI MOSI	CMOS 1.8V	Internal PD
Y8	SPI_MISO	I/O	SPI MISO	CMOS 1.8V	Internal PD
AA7	SPI_CLK	I/O	SPI Clock	CMOS 1.8V	
Y6	SPI_CS	I/O	SPI Chip Select	CMOS 1.8V	

Note: The SPI interface is in the roadmap for future software release.

6.4.2 Serial Ports

The LE310X1 module is equipped with 3 Asynchronous serial ports:

- Asynchronous Serial Port (USIF0)
- Asynchronous Serial Port (USIF1)
- Auxiliary Serial Port

Several configurations can be designed for the serial port on the OEM hardware, but the most common are:

- RS232 PC com port
- microcontroller UART @ 1.8V (Universal Asynchronous Receive Transmit)
- microcontroller UART @ 5V or other voltages different from 1.8V

Depending on the type of serial port on the OEM hardware, a level translator circuit may be needed to make the system work.

6.4.2.1 Modem Serial Port (USIF0)

The serial port 1 on the LE310X1 is an 8-wire unbalanced, asynchronous modem interface USIF0.

LE310X1 is designed for use as a DCE. Based on the conventions for DCE-DTE connections it communicates with the customer application (DTE) using the following signals:

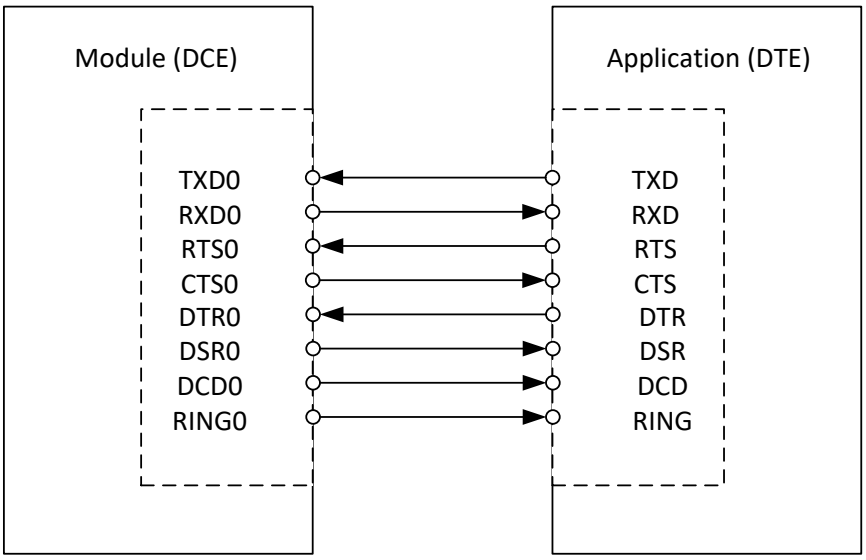

Figure 10: Serial Interface USIF0

The following table lists the available signals:

Table 14: Available Signals of USIF0

V.24 circuit	DCE		DTE	
	Signal	DIR	Pin function	DIR
103	TXD0	I	TXD	O
104	RXD0	O	RXD	I
105	RTS0	I	RTS	O
106	CTS0	O	CTS	I
108	DTR0	I	DTR	O
107	DSR0	O	DSR	I
109	DCD0	O	DCD	I
125	RING0	O	RING	I

6.4.2.2 Secondary Modem Serial Port (USIF1)

The secondary serial port on the LE310X1 is a 4-wire unbalanced, asynchronous interface USIF1.

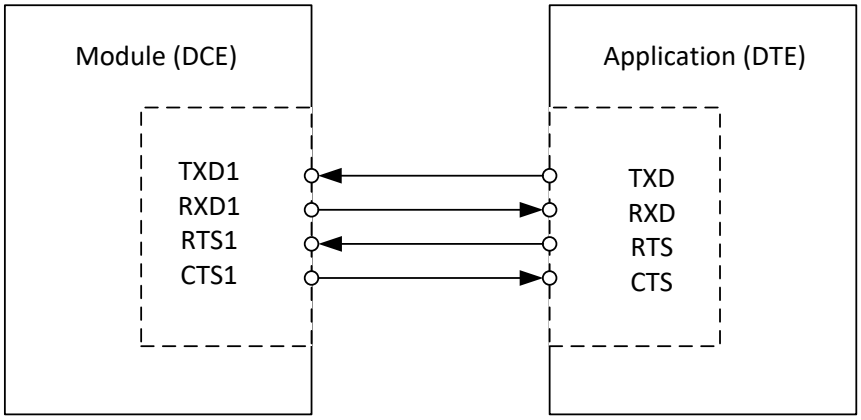

Figure 11: Serial Interface USIF1

The serial modem interface ASC1 supports following features:

- Baud rate up to 921.6 kbps
- Operation as 4-wire serial interface
- Fixed data rates, no auto baud detection
- Flow control: RTS/CTS (hardware flow control)
- Fix data formats: 8N1

The signals of the LE310X1 serial port USIF1 are:

Table 15: Available Signals of USIF1

DCE		DTE	
Signal	DIR	Function	DIR
TXD1	I	TXD	O
RXD1	O	RXD	I
RTS1	I	RTS	O
CTS1	O	CTS	I

6.4.2.3 Auxiliary Serial Port

The auxiliary serial port on the LE310X1 is a LVCMOS 1.8V interface comprising only the RX and TX signals. The signals of the LE310X1 serial port are:

Table 16: Available Signals of Auxiliary Serial Port

RS232 Pin	Signal	Pad	Name	Usage	Note
Y10	TX_AUX	O	Auxiliary UART (TX Data to DTE)	COMS 1.8V	
AA9	RX_AUX	I	Auxiliary UART (RX Data from DTE)	COMS 1.8V	Internal Pull-up

6.5 General Purpose I/O

The LE310X1 module is equipped with a set of Configurable Digital Input / Output pins (LVCMOS 1.8V). The Input pads can only be read; they report the digital value (high or low) present on the pad at the read time. The Output pads can be written or queried to set and confirm the value of the output driver.

For GPIOs providing more than one predefined functionality, the alternate function pin is internally controlled by the LE310X1 firmware and its behavior depends on the implemented function.

The following table shows the available GPIO on the LE310X1:

Table 17: LE310X1 Available GPIO

PAD	Signal	I/O	Output Drive Strength		Default State
			Low level (typ.)	High level (typ.)	
V11	GPIO1	I/O	7mA	3mA	PULLUP
V13	GPIO2	I/O	5mA	3mA	PULLUP
D7	GPIO3	I/O	5mA	3mA	PULLUP
D9	GPIO4	I/O	5mA	3mA	PULLUP
D11	GPIO5	I/O	7mA	3mA	FLOATING
D13	GPIO6	I/O	7mA	3mA	FLOATING

6.5.1 Using a GPIO as an INPUT

The GPIO pads, when used as inputs, can be connected to a digital output of another device and report its status, provided that this device has interface levels compatible with the 1.8V CMOS levels of the GPIO.

Note: To avoid a back-powering effect it is recommended to prevent any HIGH logic level signal from being applied to the digital pins of the LE310X1 when the module is powered off or during an ON/OFF transition.

6.5.2 Using a GPIO as an OUTPUT

The GPIO pads, when used as outputs, can drive 1.8V LVCMOS or level compatible digital devices or compatible hardware. When set as outputs, the pads have a push-pull output and therefore the pull-up resistor may be omitted.

6.6 ADC Converter

The LE310X1 is equipped with a single AD converter input accessible through the ADC line, which is located on Pad B18. The allowed input voltage range for this pin is 0V to 1.8V. Additionally, the resolution of the converter is adjustable within the range of 6 to 12 bits.

The following table shows the ADC characteristics:

Table 18: ADC Characteristics

Item	Min	Typical	Max	Unit
Input Voltage range	0	-	1.8	Volt
AD conversion	6	-	12	bits

6.6.1 Using ADC Converter

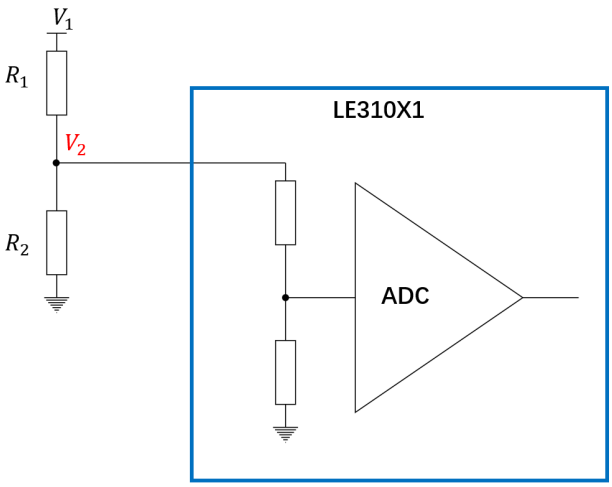

Figure 12: ADC Converter

Follow the items below when using ADC Converter:

- If the voltage at V_1 is less than 1.8V, no external voltage divider resistors are required.
- If the voltage at V_1 is greater than 1.8V, the calculation for the external voltage divider resistors are recommended to follow the above circuit .
- Due to the high-voltage mode of the ADC, the LE310X1 Module has an internal voltage divider consisting of a 24kΩ and a 12kΩ resistor.
- Therefore, when calculating the external voltage division, it is necessary to consider that the R_2 resistor is effectively paralleled with a 36kΩ resistor.
- The final ADC voltage will compensate for the voltage division, meaning the voltage read by the ADC will be consistent with V_2.
- Thus, the voltage is calculated as follows:

$$V_{ADC} = V_2 = \frac{R_2 * 36K}{36K * (R_1 + R_2) + R_1 * R_2} * V_1$$

6.7 SIM Card Interface

The LE310X1 provides two SIM card interfaces.

Table 19: SIM Card Interfaces

PAD	Signal	I/O	Description
L1	SIM_CLK	O	External SIM signal-Clock
M2	SIM_RST	O	External SIM signal- Reset
N1	SIM_DAT	I/O	External SIM signal- Data I/O
P2	SIM_VCC	-	Power supply for the SIM
G4	SIM_CLK2	O	External SIM signal –Clock2
L4	SIM_RST2	O	External SIM signal – Reset2
J4	SIM_DAT2	I/O	External SIM signal – Data I/O2
K2	SIM_VCC2	-	Power supply for the SIM

The SIM Card interface signal can either be used to connect to an host-provided SIM Card or Card holder.

6.8 Forced USB Boot

If the standard firmware upgrade procedures fail or are not possible, the FORCED_USB_BOOT pin must be set to 1.8V at power-up to set the module in program mode.

The FORCED_USB_BOOT pin must be connected only during the firmware upgrade operation. It must be left open during normal operation.

7 RF Section

7.1 TX Output Power

Table 20: TX Output Power

Product	Bands	Mode	Class	RF power Nominal*
LE310X1-LA	B1, B2, B3, B4, B5, B7, B8, B28, B66	LTE Cat.1bis	3	23dBm
LE310X1-EU	B1, B3, B7, B8, B20, B28, B38, B40, B41	LTE Cat.1bis	3	23dBm

*Max output power tolerance range according to 3GPP TS 36.521-1.

7.2 RX Sensitivity

The following 3GPP measurement conditions are used to define RX sensitivity.

Table 21: Reception Sensitivity

Technology	3GPP Compliance
4G LTE Cat.1bis	Throughput >95% 10MHz

Table 22: LE310X1-LA Typical Sensitivity Levels

Band	Sensitivity (dBm)	3GPP minimum requirements
LTE 2100 – B1	-99	-94
LTE 1900 – B2	-100	-92
LTE 1800 – B3	-99.5	-91
LTE AWS – B4	-99	-94
LTE 850 – B5	-99	-92.5
LTE 2600 – B7	-98	-92
LTE 900 – B8	-98.5	-91.5
LTE 700 – B28	-99	-93
LTE 2100 – B66	-98.5	-93.5

Table 23: LE310X1-EU Typical Sensitivity Levels

Band	Sensitivity (dBm)	3GPP minimum requirements
LTE 2100 – B1	-99.5	-94
LTE 1800 – B3	-99.5	-91
LTE 2600 – B7	-98	-92
LTE 900 – B8	-98.5	-91.5
LTE 800 – B20	-98.5	-91.5
LTE 700 – B28	-98.5	-93
LTE TDD 2600 – B38	-100	TBD
LTE TDD 2300 – B40	-100	-94.5
LTE TDD 2500 – B41	-99.5	-92.5

Note: The sensitivity level may present a deviation of approximately +/- 2dB depending on model, device, and channel; the level shown is the typical value.

7.3 Antenna Requirements

The antenna connection and board layout design are the most important aspect of the full product design as they strongly affect the general performance of the product, so read carefully and follow the requirements and the guidelines for a proper design.

The antenna and antenna transmission line on PCB for a Telit Cinterion LE310X1 device must fulfil the following requirements:

Table 24: LE310X1 Antenna and Antenna Transmission Line on PCB

Item	Value
Frequency range	Depending on the frequency band(s) provided by the network operator, the customer shall use the most suitable antenna for that/those band(s)
Impedance	50 ohm
Input power	> 24dBm Average power
VSWR absolute max	≤ 10:1 (limit to avoid permanent damage)
VSWR recommended	≤ 2:1 (limit to fulfil all regulatory requirements)

7.3.1 PCB Design Guidelines

When using the LE310X1, since there's no antenna connector on the module, the antenna must be connected to the LE310X1 antenna pad (K1) using a transmission line implemented on the PCB.

This transmission line shall fulfil the following requirements:

Table 25: LE310X1 Antenna Pad Requirements

Item	Value
Characteristic Impedance	50 ohm (+-10%)
Max Attenuation	0.3 dB
Coupling	Coupling with other signals shall be avoided
Ground Plane	The cold End (Ground Plane) of the antenna shall be equipotential to the LE310X1 ground pins

The transmission line should be designed according to the following guidelines:

- Make sure that the transmission line's characteristic impedance is 50 ohm.
- Keep the line on the PCB as short as possible, since the antenna line loss shall be less than about 0.3 dB.
- The geometry of the line must have uniform characteristics, constant cross-section, and avoid meanders and abrupt curves.
- Any kind of suitable geometry/structure (Microstrip, Stripline, Coplanar, Grounded Coplanar Waveguide...) is allowed to connect the module to the antenna.

- If the transmission line requires a GND reference plane, ensure that this plane has no slots or cuts that might affect the return current path, hence altering the expected impedance. Proper design guidelines for high-speed RF designs should be followed.
- If possible, use one layer of the PCB as a reference Ground plane; and refer the transmission line to this plane.
- It is advisable although not strictly necessary, to provide a GND plane also on the sides of the antenna transmission line (separation >3W where W is the trace width) with proper via stitching to the reference GND plane underneath.
- Avoid routing any digital signal or noisy power supply directly below the antenna signals.
- Place the noisy EM devices as far as possible from the module antenna line.
- Keep the antenna line far away from the module power supply lines.
- If EM noisy devices (such as fast switching ICs, LCD, and so on) are present on the PCB hosting the LE310X1, take care of the shielding of the antenna line by burying it in an inner layer of PCB and surrounding it with the ground planes, or shield it with a metal frame cover.
- If the noisy EM devices are not present around the line, the use of geometries such as microstrip or grounded coplanar waveguide is preferable since they typically ensure less attenuation than a strip-line of the same length.

8 Mechanical Design

8.1 Mechanical Drawing

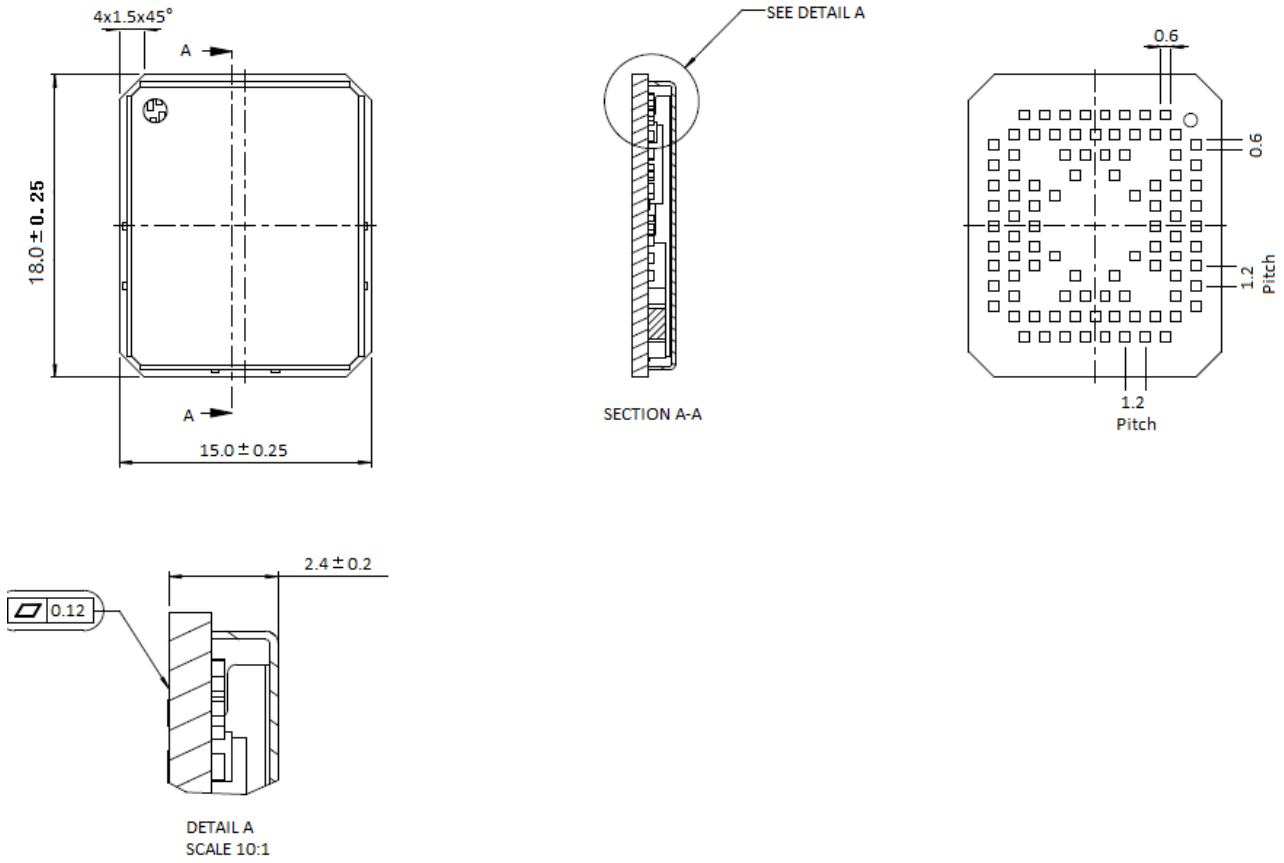

Figure 13: Mechanical Drawing

9 Application PCB Design

9.1 Footprint

Copper pattern (top view)

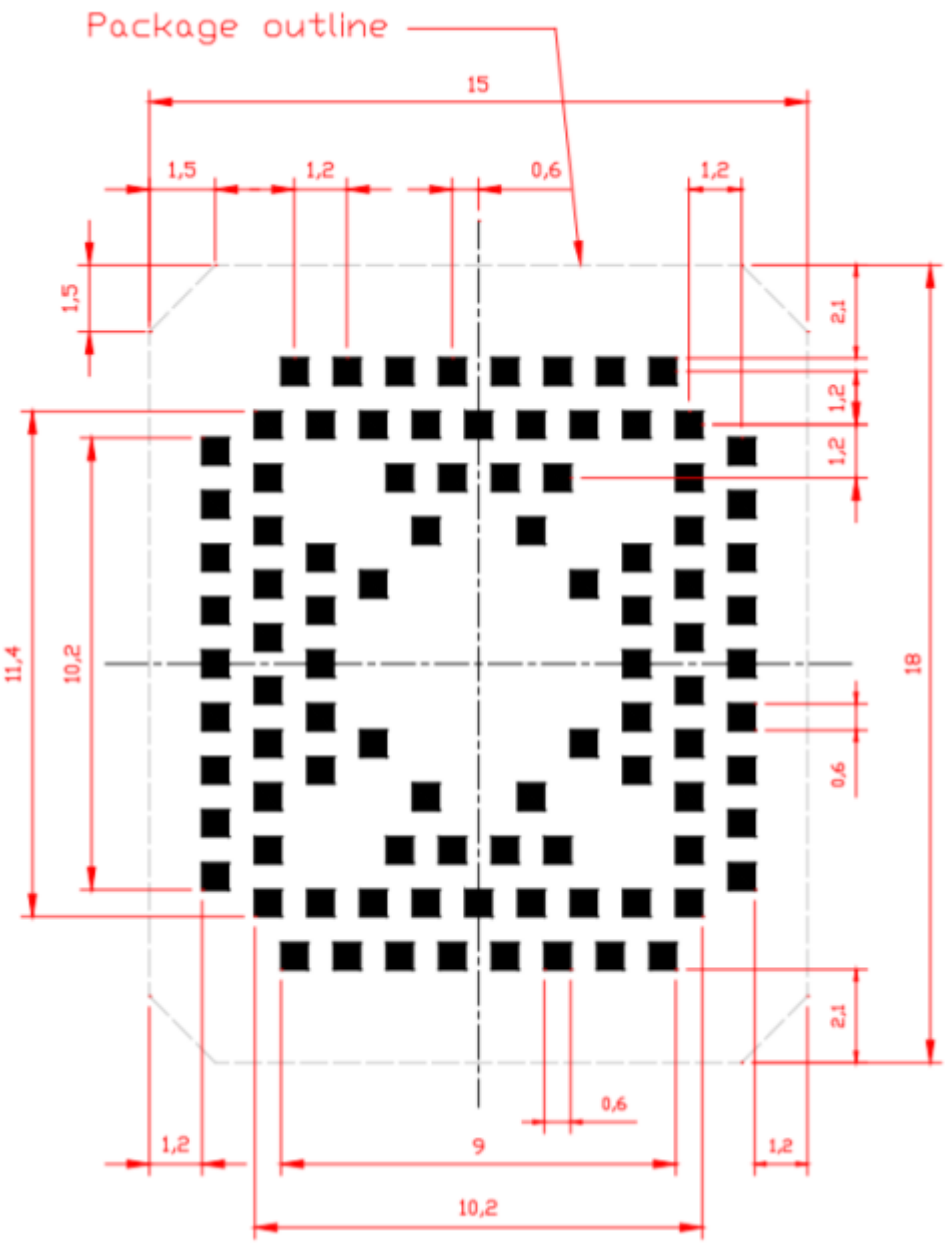

Figure 14: LE310X1-LA, LE310X1-EU Copper Pattern (top view)

Solder resist pattern (top view)

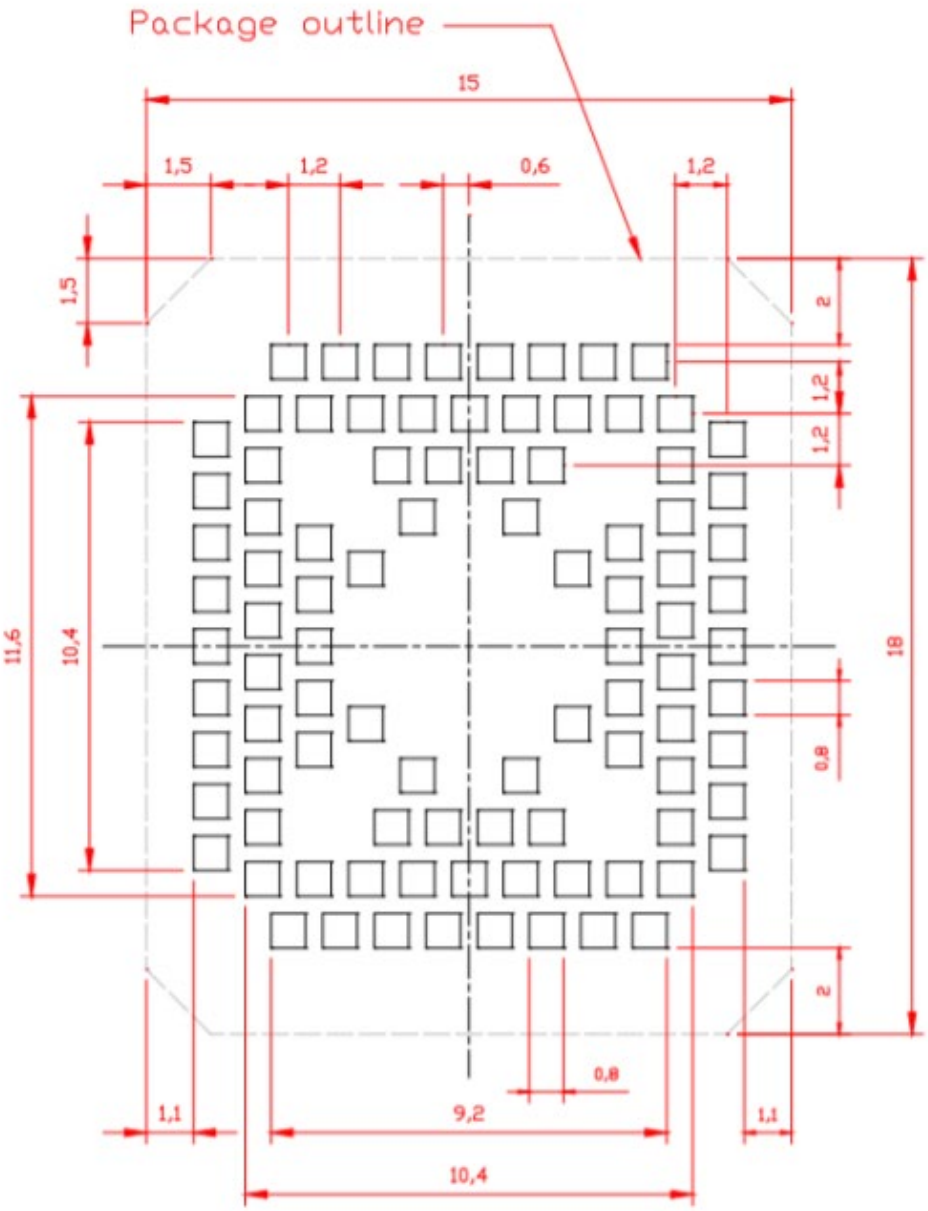

Figure 15: LE310X1-LA, LE310X1-EU Solder resist pattern (top view)

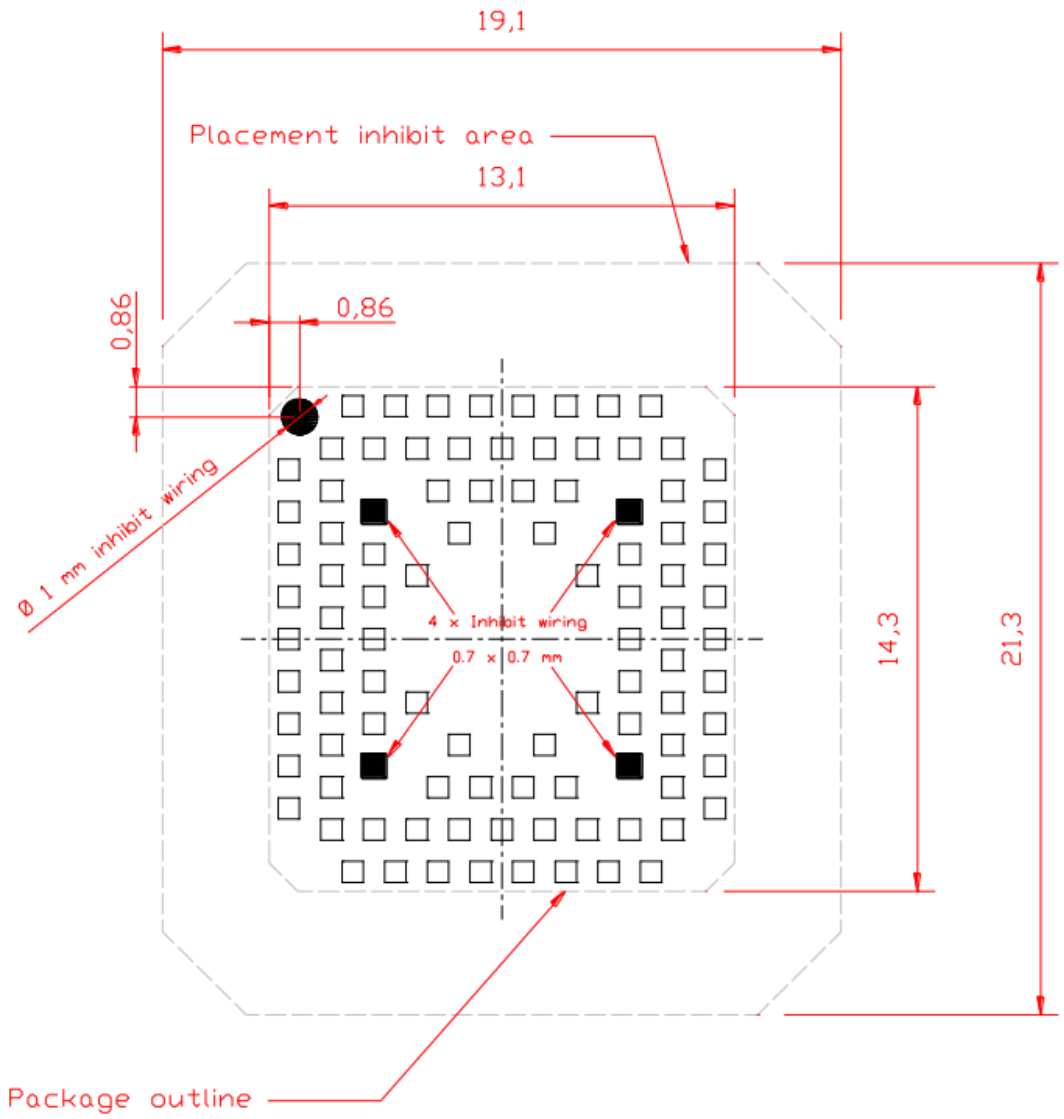

Figure 16: Inhibit area around the module

Note: In the customer application, the region under WIRING must be clear from signal or ground paths.

9.2 PCB Pad Design

Non-solder mask defined (NSMD) type is recommended for the solder pads on the PCB.

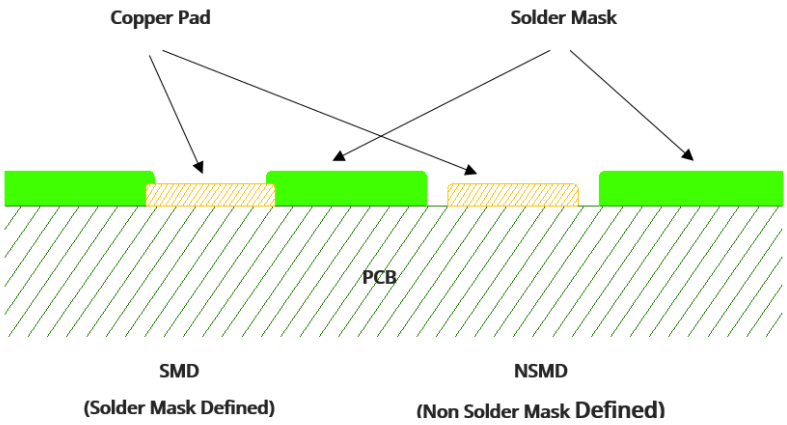

Figure 17: PCB Solder Pad Recommendations

9.3 Recommendations for PCB Pad Dimensions

The recommendation for the PCB pad dimensions is 1:1 with module pads.

It is not recommended to place via or micro-via not covered by the solder resist in an area of 0.3 mm around the pads unless it carries the same signal as the pad itself.

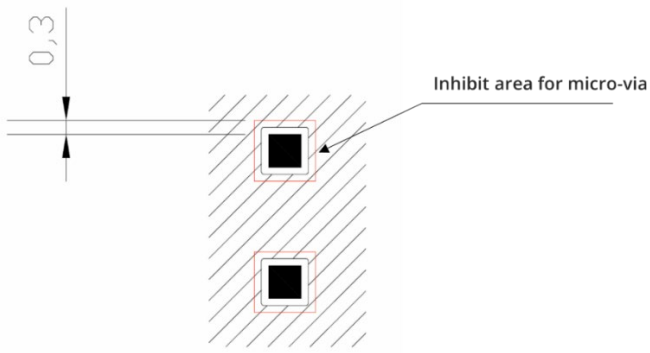

Figure 18: Pad Dimensions Recommendations

Holes in the pad are allowed only for blind holes and not for through holes.

Recommendations for PCB pad surfaces:

Table 26: Recommendations for PCB Pad Surfaces

Finish	Layer Thickness (um)	Properties
Electroless Ni / Immersion Au	3 –7 / 0.05 – 0.15	Good solder ability protection, high shear force values

The PCB must be able to resist the higher temperatures which are occurring during the lead-free process. This issue should be discussed with the PCB supplier. Generally, the wettability of tin-lead solder paste on the described surface plating is better than the lead-free solder paste.

It is not necessary to panel the application's PCB, however, in that case, it is recommended to use milled contours and perforated breakaway tabs; scoring or v-cut solutions are not recommended.

10 Manufacturing

10.1 Stencil

The layout of the stencil apertures can be the same as the recommended footprint (1:1), we suggest a thickness of stencil foil ≥ 120 µm.

10.2 Solder Paste

Table 27: Solder Paste

Item	Lead-Free
Solder Paste	Sn/Ag/Cu

It is recommended to use only "no clean" solder paste to avoid the cleaning of the modules after assembly.

10.3 Solder Reflow

Recommended solder reflow profile:

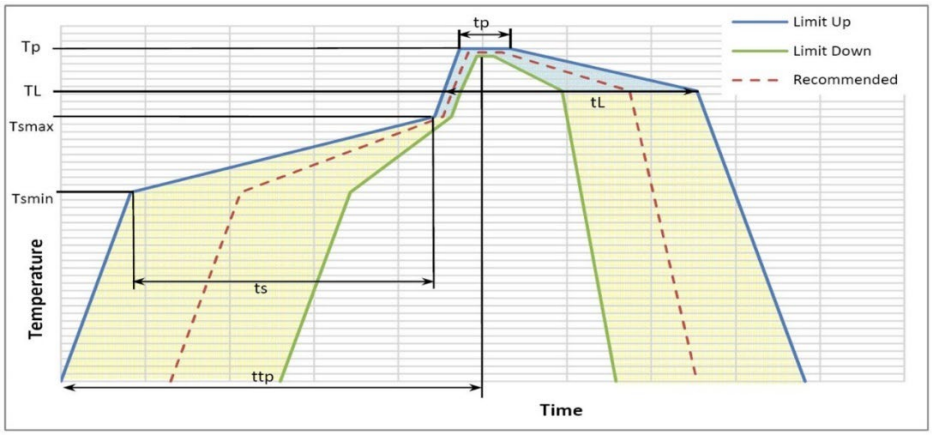

Figure 19: Recommended Solder Reflow Profile

Note: All temperatures refer to the topside of the package, measured on the package body surface.

Warning: THE LE310X1 MODULES WITHSTANDS ONE REFLOW PROCESS ONLY. Make sure that in a double-side assembly process the module side will be the latter to be soldered.

Warning: The above solder reflow profile represents the typical SAC reflow limits and does not guarantee adequate adherence of the module to the customer application throughout the temperature range. Customers must optimize the reflow profile depending on the overall system taking into account such factors as thermal mass and warpage.

Table 28: Profile Feature Recommendations

Profile Feature	Pb-Free Assembly Free
Average ramp-up rate (TL to TP)	3℃/second max
Preheat Temperature Min (Tsmin) Temperature Max (Tsmax) Time (min to max) (ts)	 150℃ 200℃ 60-180 seconds
Tsmax to TL Ramp-up Rate	 3℃/second max
Time maintained above: Temperature (TL) Time (tL)	 217℃ 60-150 seconds
Peak Temperature (Tp)	245 +0/-5℃
Time within 5℃ of actual Peak Temperature (tp)	10-30 seconds
Ramp-down Rate	6℃/second max.
Time 25℃ to Peak Temperature	8 minutes max.

11 Packaging

11.1 Tray

The LE310X1 modules are packaged on trays that can be used in SMT processes for pick & place handling. The first Marketing and Engineering samples of the LE310X1 series will be shipped with the current packaging of the LE310X1 modules. The mass production units of LE310X1 will be shipped according to the following drawings:

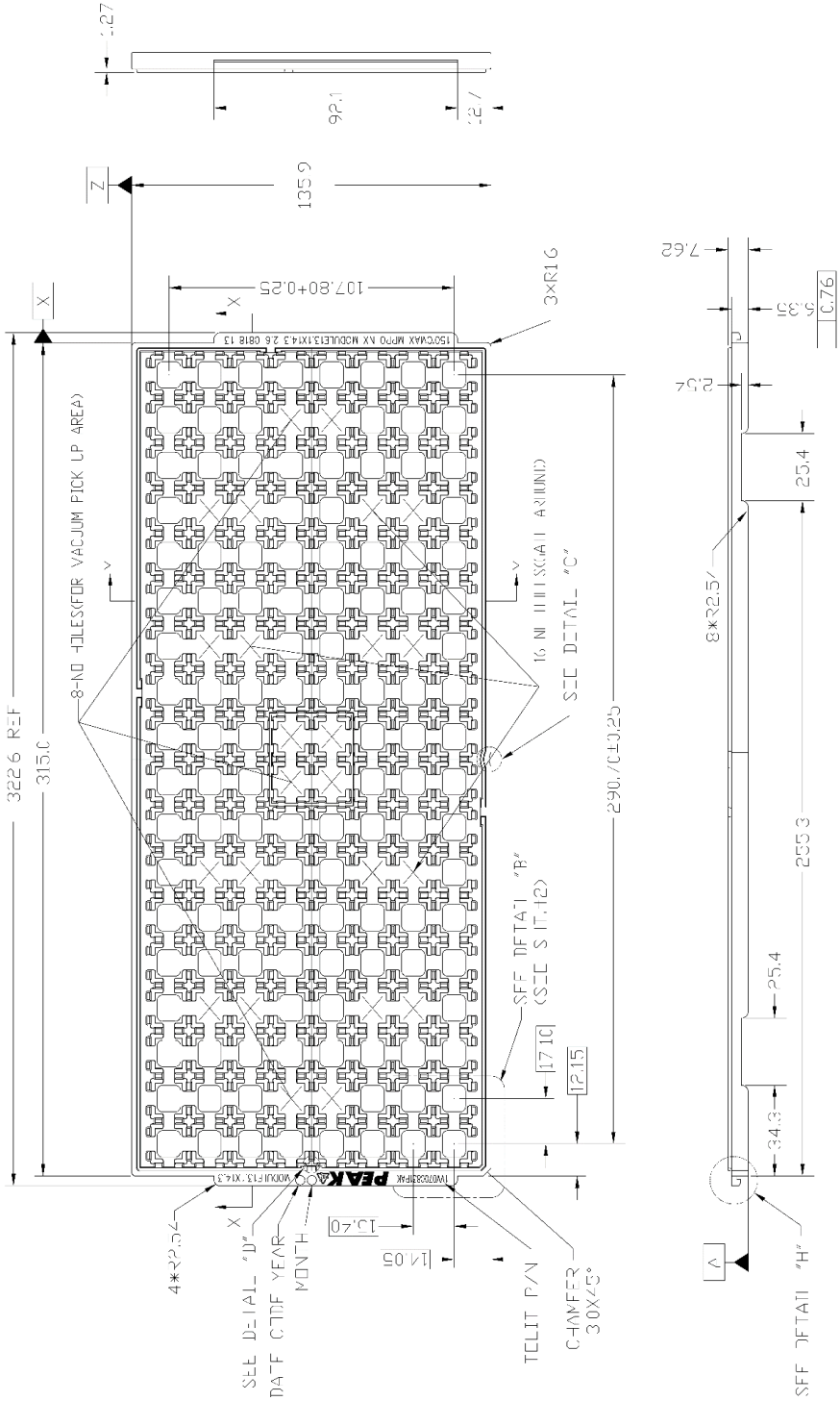

Figure 20: Tray Detail

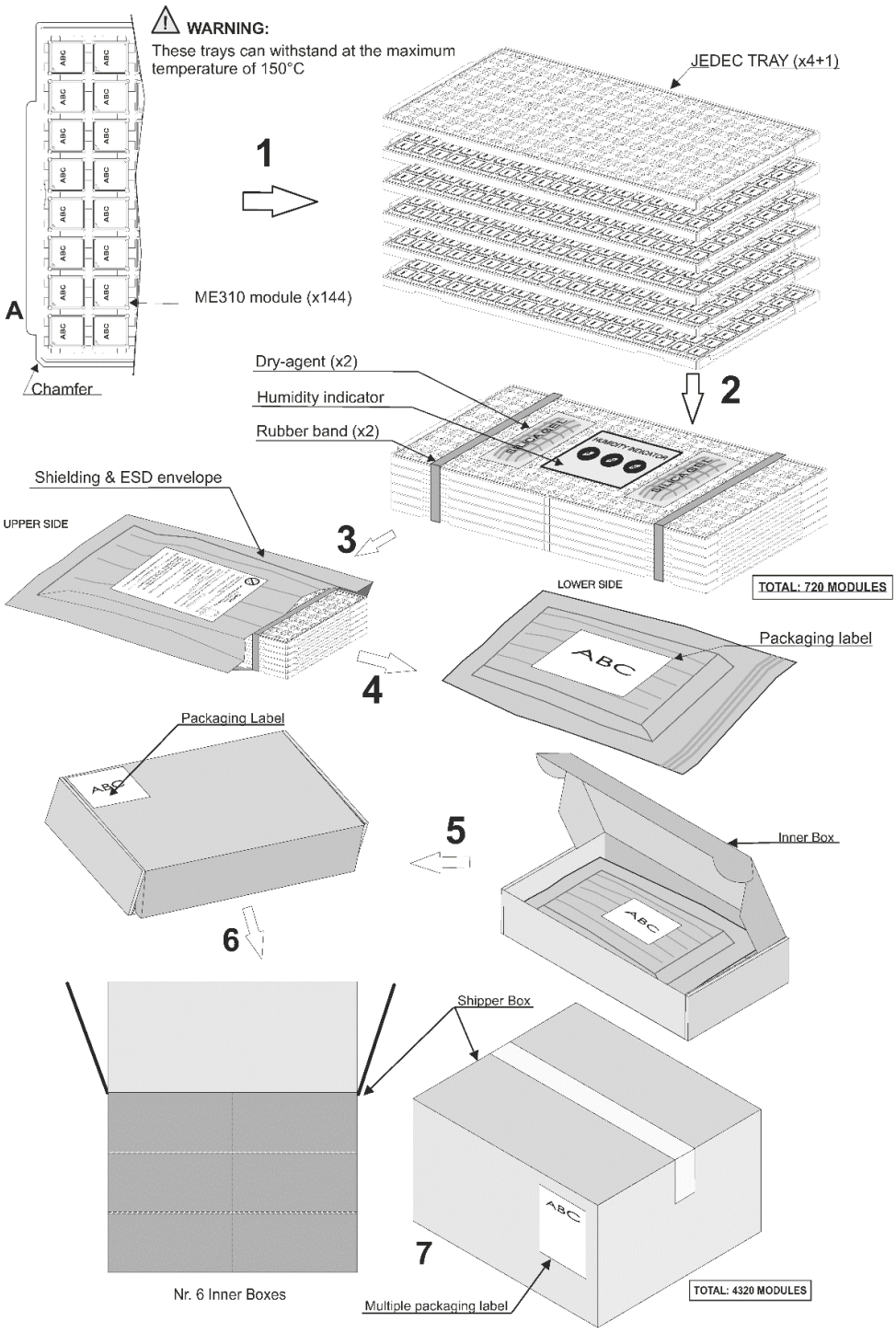

Figure 21: Tray Packaging

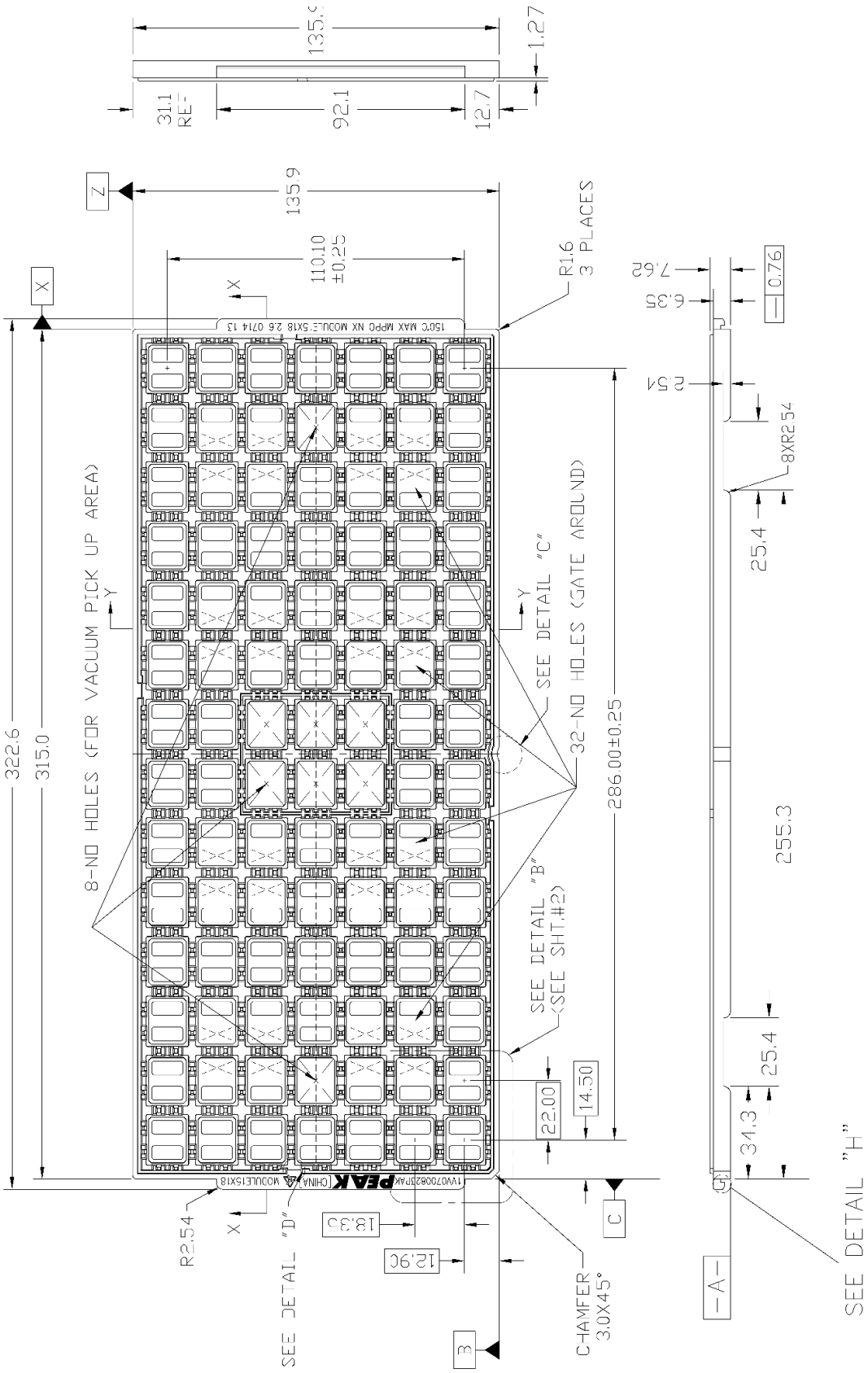

Figure 22: Tray Detail

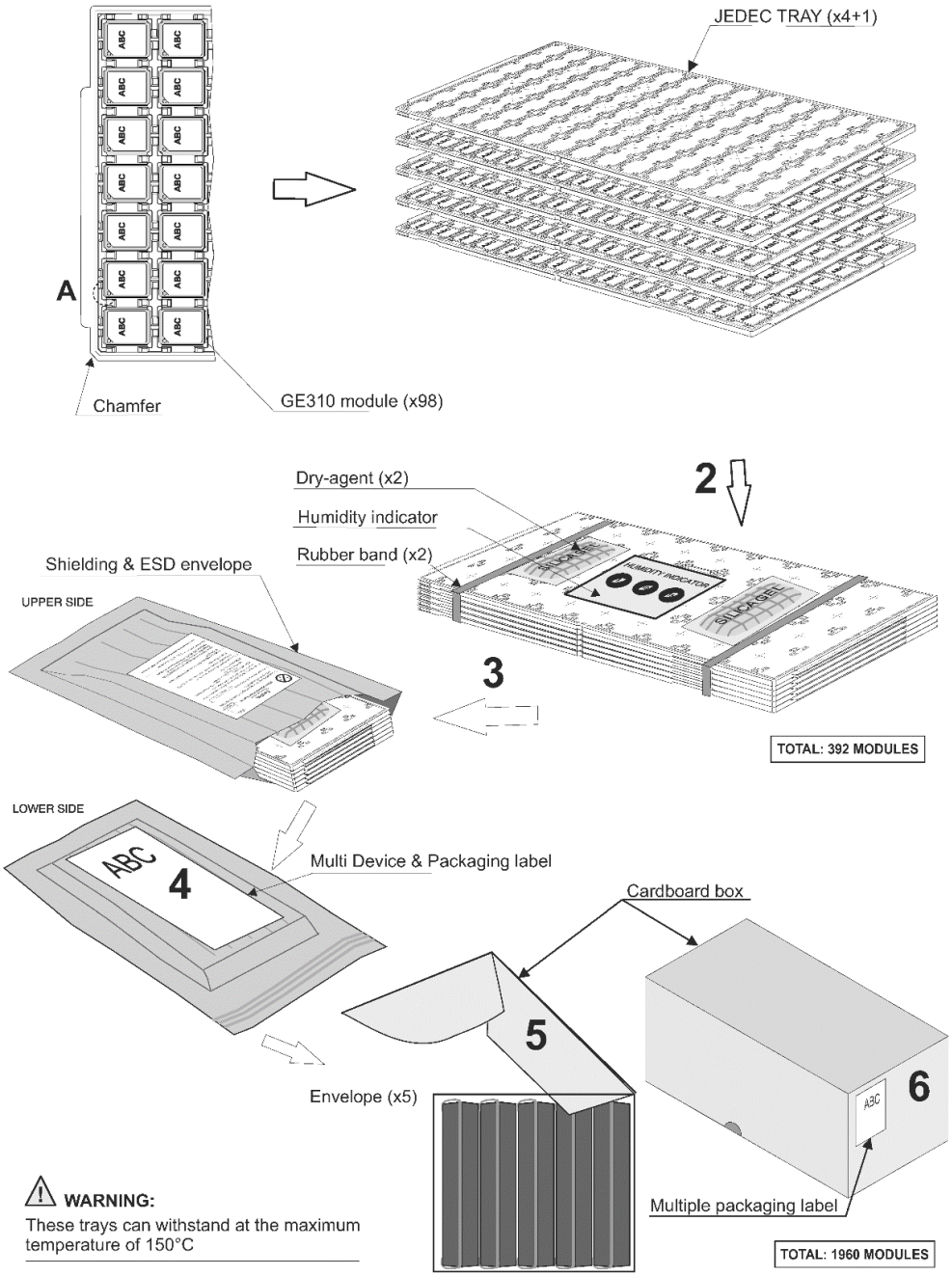

Figure 23: Tray Packaging

11.2 Reel

The LE310X1 can be packaged on reels of 1000 pieces each. See the figure for module positioning into the carrier.

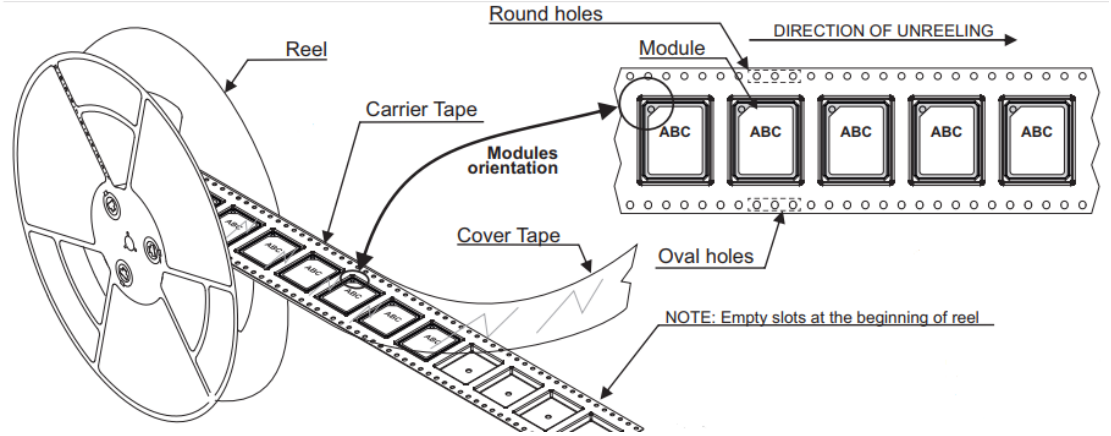

Figure 24: Module Positioning into the Carrier

11.3 Carrier Tape Detail

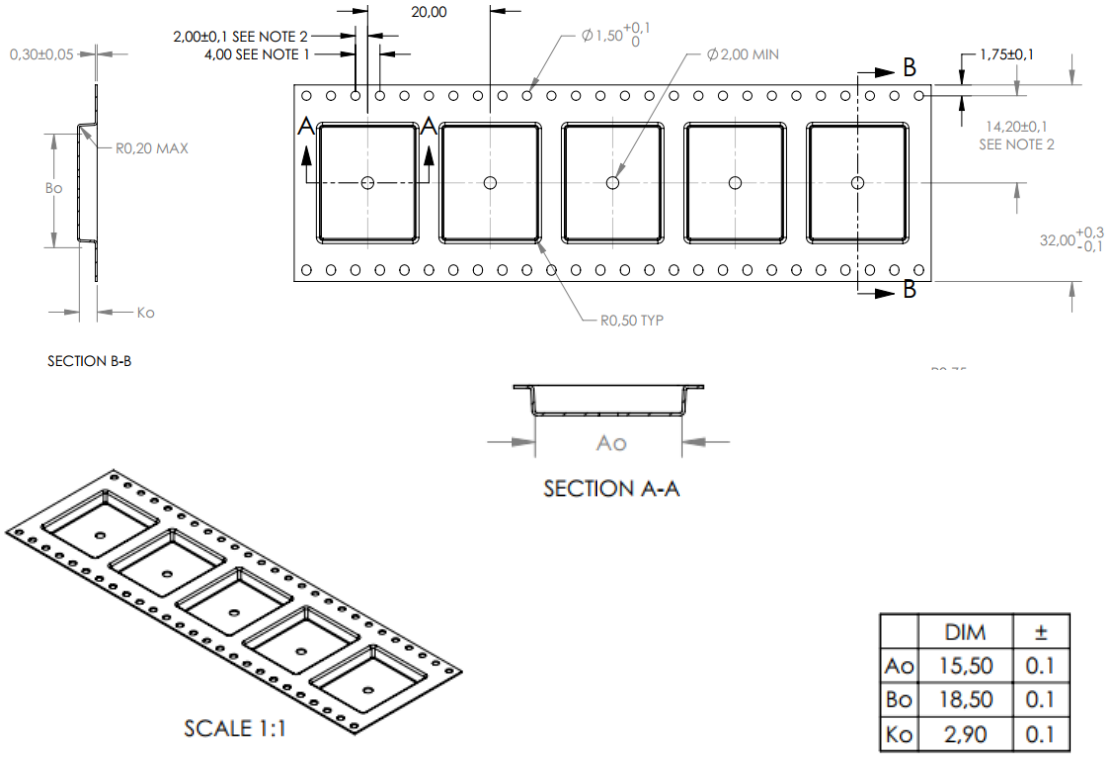

	DIM	±
Ao	15,50	0.1
Bo	18,50	0.1
Ko	2,90	0.1

Figure 25: Carrier Tape Detail

11.4 Reel Detail

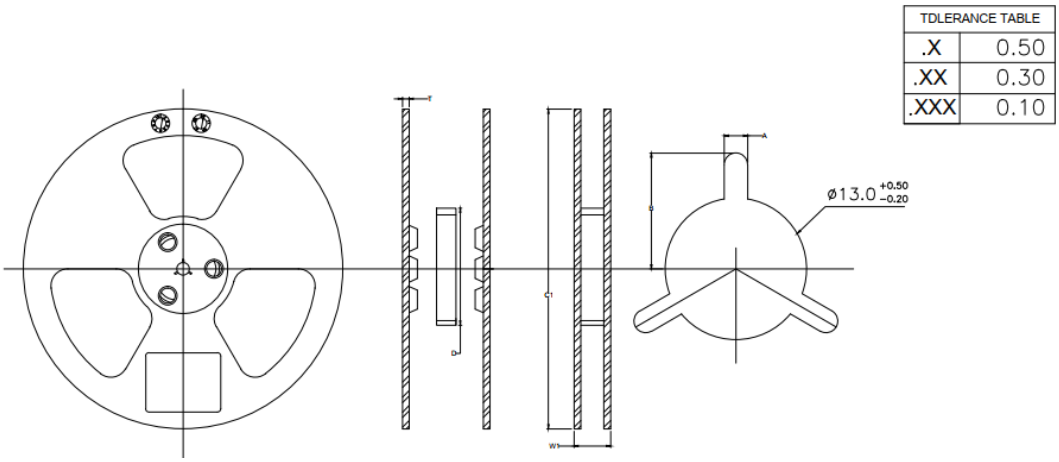

Figure 26: Reel Detail

11.5 Moisture Sensitivity

The LE310X1 is a Moisture Sensitive Device level 3, according to standard IPC/JEDEC J-STD-020, and takes care of all the relative requirements for using this kind of component.

Moreover, the customer has to take care of the following conditions:

- **a** Calculated shelf life in sealed bag: 12 months at <40℃ and <90% relative humidity (RH).
- **b** An environmental condition during the production: 30℃ / 60% RH according to IPC/JEDEC J STD-033A paragraph 5.
- **c** The maximum time between the opening of the sealed bag and the reflow process must be 168 hours if condition b) "IPC/JEDEC J-STD-033D paragraph 5.2" is respected.
- **d** Baking is required if conditions b) or c) are not respected.
- **e** Baking is required if the humidity indicator inside the bag indicates 10% RH or more.

12 Conformity Assessment Issue

12.1 Approvals Summary

Table 29: EMEA Approvals summary

Region	EMEA	
Country & Type Approval	EU RED	UK UKCA
LE310X1-LA		
LE310X1-EU	●	

Table 30: Americas Approvals summary

Region	Americas					
Country & Type Approval	US FCC	CA ISED	BR ANATEL	CO CRC	PE MTC	AR ENACOM
LE310X1-LA	●		●	●	●	●
LE310X1-EU			●			

●	The equipment is compliant
●	Type approval is in progress
	The equipment is not compliant

Note: For approvals not included in the above, please contact Telit support.

12.2 EMEA Approvals

12.2.1 EU RED

12.2.1.1 EU Declaration of Conformity

In accordance with the above Approval Compliance Summary table, where applicable (green dots), hereby, Telit Communications S.p.A declares that the equipment is in compliance with the Directive 2014/53/EU.

The full text of the EU declaration of conformity is available at the following internet address: https://www.telit.com/red

Text of 2014/53/EU Directive (RED) requirements can be found here:

https://eur-lex.europa.eu/legal-content/EN/TXT/?uri=CELEX:32014L0053

12.2.1.2 RED Antenna

This radio transmitter has been approved under RED to operate with the antenna types listed below with the maximum permissible gain indicated. The usage of a different antenna in the final hosting device may need a new assessment of host conformity to RED.

Table 31: RED Antenna Type

Model	Antenna Type
LE310X1-EU	Omnidirectional Max Antenna Gain: 617-803MHz 2dBi, 824-850 MHz -1dBi, 1710-1800MHz 3dBi , 1800-1910MHz 1dBi

Table 32: Max Gain for RED

Max Gain for RED (dBi)	
Band	LE310X1-EU
LTE Band 1	11.85
LTE Band 3	11.35
LTE Band 7	11.95
LTE Band 8	8.46
LTE Band 20	8.23
LTE Band 28	7.49
LTE Band 38	11.95
LTE Band 40	8.95
LTE Band 41	8.95

The integration is limited to fixed or mobile categorized host devices, where a separation distance between the host devices and any person of min. 20cm can be assured during normal operating conditions.

12.3 Americas Approvals

12.3.1 USA FCC

12.3.1.1 FCC Certificates

The FCC Grants can be found here: https://www.fcc.gov/oet/ea/fccid

12.3.1.2 Applicable FCC Rules

Table 33: Applicable FCC rules

Model	Applicable FCC Rules
LE310X1-LA	47 CFR: - Part 2, 22, 24, 27, 90 - Part 15B

12.3.1.3 FCC Regulatory Notices

This module is intended for OEM integrators only. Per FCC KDB 996369 D03 OEM Manual, the following conditions must be strictly followed when using this certified module.

Modification statement

Telit has not approved any changes or modifications to this device by the user.

FCC Caution: Any changes or modifications not expressly approved by the party responsible for compliance could void the user's authority to operate this equipment.

Interference statement

This device complies with Part 15 of the FCC Rules. Operation is subject to the following two conditions:

(1) this device may not cause interference, and

(2) this device must accept any interference, including interference that may cause undesired operation of the device.

RF exposure considerations

This equipment complies with FCC mobile radiation exposure limits set forth for an uncontrolled environment. This equipment should be installed and operated with a minimum distance of 20cm between the radiator and your body. If the module is installed in a portable host, a separate SAR evaluation is required to confirm compliance with relevant FCC portable RF exposure rules.

FCC Class B digital device notice

This equipment has been tested and found to comply with the limits for a Class B digital device, pursuant to part 15 of the FCC Rules. These limits are designed to provide reasonable protection against harmful interference in a residential installation. This equipment generates, uses and can radiate radio frequency energy and, if not installed and used in accordance with the instructions, may cause harmful interference to radio communications. However, there is no guarantee that interference will not occur in a particular installation. If this equipment does cause harmful interference to radio or television reception, which can be determined by turning the equipment off and on, the user is encouraged to try to correct the interference by taking one or more of the following measures:

- Reorient or relocate the receiving antenna.
- Increase the separation between the equipment and receiver.
- Connect the equipment into an outlet on a circuit different from that to which the receiver is connected.
- Consult the dealer or an experienced radio/TV technician for help.

Information for the OEMs and Integrators

1. This device is intended for OEM integrators only.
2. Please see the full Grant of Equipment document for other restrictions.

OEM/Host manufacturers are ultimately responsible for the compliance of the Host and Module. The final product must be reassessed against all the essential requirements of the FCC rule such as FCC Part 15 Subpart B before it can be placed on the US market. This includes reassessing the transmitter module for compliance with the Radio and EMF

essential requirements of the FCC rules. This module must not be incorporated into any other device or system without retesting for compliance as multi-radio and combined equipment.

The final host product must comply with the requirements specified in §15.203, §15.204(b) and §15.204(c).

Manual Information to the End User

The OEM integrator should be aware not to provide information to the end user on how to install or remove this RF module in the user's manual of the end product which integrates this module. The end user manual shall include all required regulatory information/warming as shown in this manual

Information on test modes and additional testing requirement

The module is tested for standalone mobile RF exposure use condition. Any other usage conditions such as co-location with other transmitter(s) or being used in a portable condition will need a separate reassessment through a class II permissive change application or new certification.

If this module is intended for use in a portable device, you are responsible for separate approval to satisfy the SAR requirements of FCC Part 2.1093.

Limited module procedures

Not applicable.

Trace antenna designs

Please, refer to Section 8 of this document for antenna connector trace layout design and to the Gerber files attached to this document. Note that only the unique antenna connectors as indicated in this manual can be used for all transmitter ports.

Any deviation(s) from the defined parameters of the trace layout to antenna connector(s), as described by the instructions, require that the host product manufacturer must notify the module grantee that they wish to change the antenna trace design. In this case, a Class II permissive change application is required to be filed by the grantee, or the host manufacturer can take responsibility through the change in FCC ID (new application) procedure followed by a Class II permissive change application.

Unique antenna connector

For situations where the host product manufacturer is responsible for an external connector, for example with an RF pin and antenna trace design, the integration instructions shall inform the installer that unique antenna connector must be used on the Part 15 authorized transmitters used in the host product. The module manufacturers shall provide a list of acceptable unique connectors.

Additional testing, Part 15 Subpart B disclaimer

The modular transmitter is only authorized by the FCC for the specific rule parts (for example, FCC transmitter rules) listed on the grant, and that the host product

manufacturer is responsible for compliance to any other FCC rules that apply to the host not covered by the modular transmitter grant of certification.

This transmitter module is tested as a subsystem and its certification does not cover the FCC Part 15 Subpart B (unintentional radiator) rule requirement applicable to the final host. The final host will still need to be reassessed for compliance to this portion of rule requirements if applicable.

As long as all conditions above are met, further transmitter test will not be required. However, the OEM integrator is still responsible for testing their end-product for any additional compliance requirements required with this module installed.

Important Note: In the event that these conditions can not be met (for example certain laptop configurations or co-location with another transmitter), then the FCC authorization is no longer considered valid and the FCC ID can not be used on the final product. In these circumstances, the OEM integrator will be responsible for re-evaluating the end product (including the transmitter) and obtaining a separate FCC authorization.

EMI Considerations

Please follow the guidance provided for host manufacturers in KDB publications 996369 D02 and D04.

How to make changes

Only Grantees are permitted to make permissive changes. Please contact us should the host integrator expect the module to be used differently than as granted:

Grantee code: RI7

Grantee name: Telit Communications S.p.A.

Mailing address: Viale Stazione di Prosecco 5/b, 34010 Sgonico – Trieste, Italy

Website: https://www.telit.com/

Support contact: TS-EMEA@telit.com

12.3.1.4 FCC Antenna Info

This radio transmitter has been approved by FCC to operate with the antenna types listed below with the maximum permissible gain indicated. Antennas of the same type with equal or lower gain may also be used with this module. Antennas having a gain greater than the maximum gain indicated for that type, are strictly prohibited for use with this device. The antenna must be installed such that 20 cm can be maintained between the antenna and users.

This radio module is sold without a specific antenna. Detailed electrical characteristics of the usable antenna are shown in Chapter 7.

Table 34: FCC Antenna Type

Model	Antenna Type
LE310X1-LA	Omnidirectional Max Antenna Gain: 617-803MHz 2dBi, 824-850 MHz -1dBi, 1710-1800MHz 3dBi , 1800-1910MHz 1dBi

Table 35: Max Gain for FCC (dBi)

Max Gain for FCC (dBi)	
Band	LE310X1-LA
LTE Band 2	8.01
LTE Band 4	5.0
LTE Band 5	9.40
LTE Band 7	8.01
LTE Band 66	5.00

12.3.1.5 FCC Labelling Requirements for the Host Device

The host device shall be properly labelled to identify the modules within the host device. The certification label of the module shall be clearly visible at all times when installed in the host device, otherwise the host device must be labelled to display the FCC ID of the module, preceded by the words "Contains transmitter module", or the word "Contains", or similar wording expressing the same meaning, as in the below table.

Table 36:Host device FCC label

Model	FCC ID
LE310X1-LA	Contains FCC ID: RI7LE310X1LA

12.3.2 Brazil ANATEL

12.3.2.1 ANATEL Regulatory Notices

LE310X1-LA and LE310X1-EU modules are certified in Brazil by Anatel.

Agência Nacional de Telecomunicações (ANATEL) of Brazil

"Este equipamento não tem direito à proteção contra interferência prejudicial e não pode causar interferência em sistemas devidamente autorizados".

"This equipment is not entitled to protection against harmful interference and must not cause interference in duly authorized systems"

LE310X1-LA Homologation # 08676-25-02618
LE310X1-EU Homologation # 08676-25-02618

12.3.3 PERU MTC

12.3.3.1 MTC Regulatory Notices

In accordance with MTC rules the model LE310X1-LA is also identified with FCC ID: RI7LE310X1LA on product and packaging label.

12.3.4 Colombia CRC

12.3.4.1 CRC Regulatory Notices

In accordance with CRC rules the product identification code LE310X1-LA, or model name or type name, is used on product label, packaging as well on test reports submitted for type approval.

12.3.5 Argentina RAMATEL

12.3.5.1 RAMATEL Regulatory Notices (former ENACOM)

In accordance with ENACOM/RAMATEL rules the product is marked as below evidenced:

LE310X1-LA Registration Number: X-00000

Notice for Telit Cinterion customers:

If the RAMATEL identification number is not visible upon the module installation inside another device, then the external part of the main device must also carry a label referencing the module it contains.

This external label must include the RAMATEL identification information of the homologated product, preceded by the inscription “CONTIENE”, as shown in the attached file.

The “CONTIENE” inscription must be printed in Arial font with a minimum height of 5 points. Those main devices containing one or more modules subject to homologation and/or coding must include in their identification the registration numbers issued for each module.

13 Acronyms and Abbreviations

Table 37: Acronyms and Abbreviations

Acronym	Definition
ADC	Analog – Digital Converter
CLK	Clock
CMOS	Complementary Metal – Oxide Semiconductor
CS	Chip Select
DAC	Digital – Analog Converter
DTE	Data Terminal Equipment
ESR	Equivalent Series Resistance
GPIO	General Purpose Input Output
HS	High Speed
I/O	Input Output
MISO	Master Input – Slave Output
MOSI	Master Output – Slave Input
MRDY	Master Ready
PCB	Printed Circuit Board
RTC	Real-Time Clock
SIM	Subscriber Identification Module
SPI	Serial Peripheral Interface
SRDY	Slave Ready
UART	Universal Asynchronous Receiver Transmitter
USB	Universal Serial Bus
VSWR	Voltage Standing Wave Radio

14 Related Documents

For current documentation and downloads, refer to https://dz.telit.com/.

Table 38: Related Documents

S.no	Doc Code	Document Title
1	80861DSW10400A	LE310X1 Software Release Note
2	80861ST11253A	LE310X1 AT command Reference Guide

15 Document History

Table 39: Document History

Revision	Date	Changes
2	2026-04-13	Section 3.4: Updated thickness and weight Section 3.5: Updated normal and extended temperature ranges Section 5.1: Updated operating and extended voltage ranges Section 5.2: Updated current consumption ratings Section 5.3.1: Ovearll update in Sections 5.3.3.1, 5.3.3.2, and 5.3.3.3. Section 5.5: Updated output voltage and current Section 6.3.1: Updated time for software shutdown procedure Section 6.3.2: Updated time for hardware shutdown procedure Section 6.3.3: Updated time for reset procedure Section 6.5: Updated default state in Table 17 Section 11.1: Updated the Tray Packaging information Chapter 12: Updated approval summary and details Section 7.2: Updated typical sensitivity levels
1	2025-12-24	Added a chapter: Conformity Assessment Issue
0	2025-10-24	Initial release

From Mod.0818 Rev.18

© Telit Cinterion. All rights reserved.

Technical Documentation