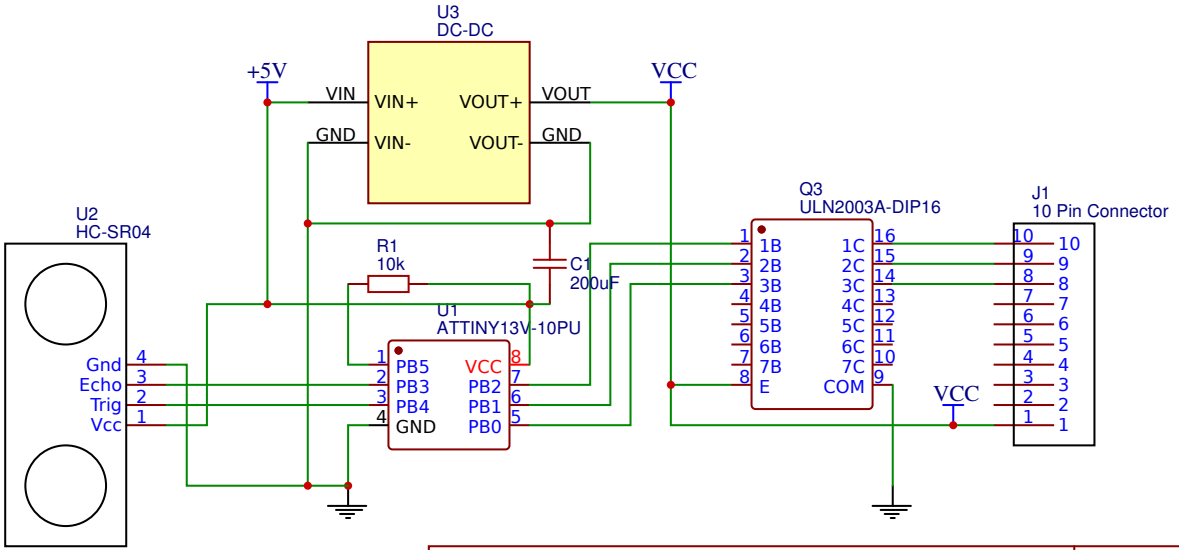

TITLE: Attiny13 Garage Sensor		REV: 1.0
Date: 2017-10-07		Sheet: 1/1
EasyEDA V4.9.3	Drawn By: DigitalScribe	