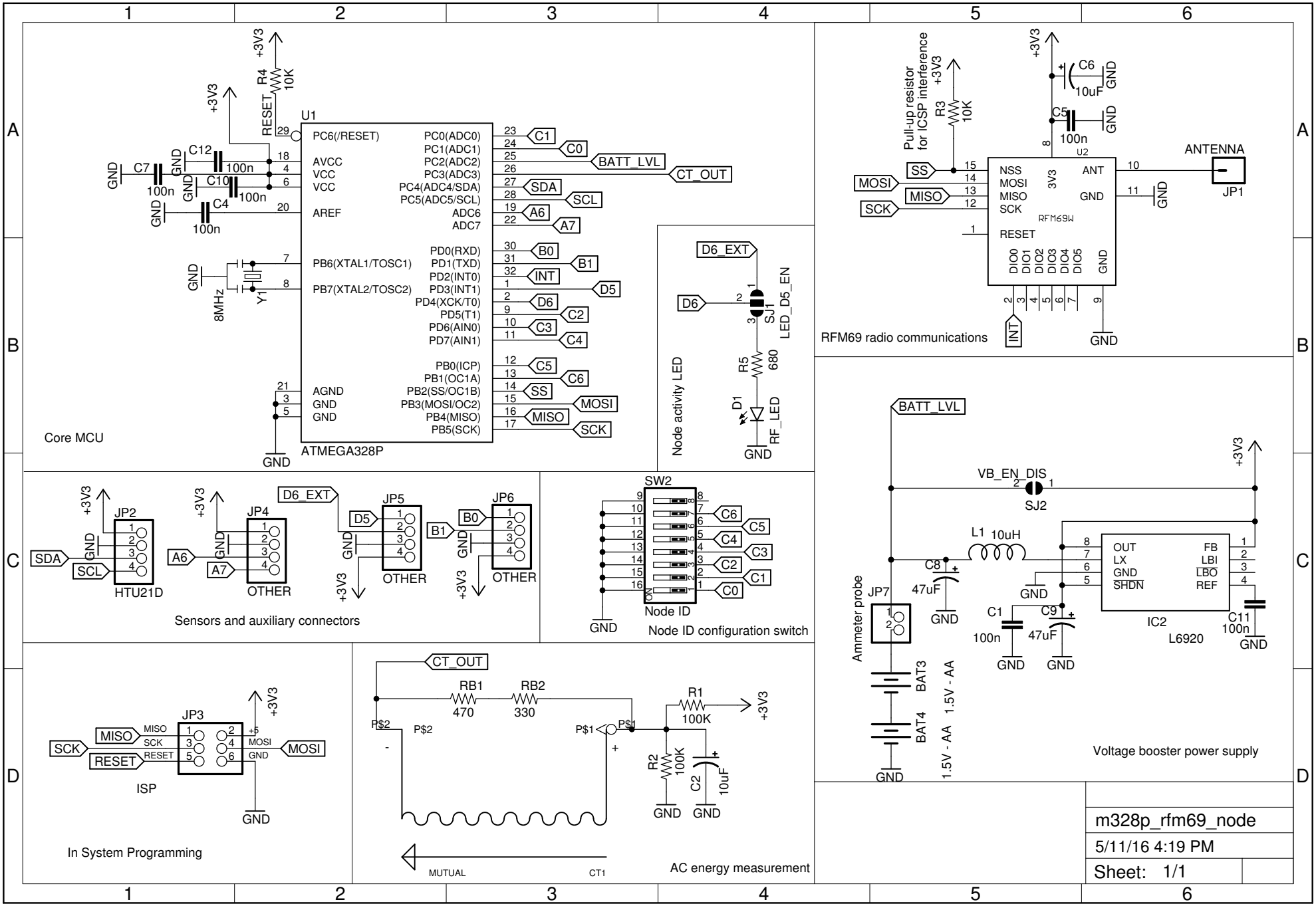
Core MCU
U1
ATMEGA328P
PC6(/RESET)
AVCC
VCC
VCC
AREF
AGND
GND
GND
PB6(XTAL1/TOSC1)
PB7(XTAL2/TOSC2)
PC0(ADC0)
PC1(ADC1)
PC2(ADC2)
PC3(ADC3)
PC4(ADC4/SDA)
PC5(ADC5/SCL)
ADC6
ADC7
PD0(RXD)
PD1(TXD)
PD2(INT0)
PD3(INT1)
PD4(XCK/T0)
PD5(T1)
PD6(AIN0)
PD7(AIN1)
PB0(ICP)
PB1(OC1A)
PB2(SS/OC1B)
PB3(MOSI/OC2)
PB4(MISO)
PB5(SCK)
+3V3
R4 10K
RESET
C12 100n
C10 100n
C7 100n
C4 100n
Y1 8MHz
C1
C0
BATT_LVL
CT_OUT
SDA
SCL
A6
A7
B0
B1
INT
D5
D6
C2
C3
C4
C5
C6
SS
MOSI
MISO
SCK
Node activity LED
D6_EXT
D6
SJ1
LED_D5_EN
R5 680
D1
RF_LED
RFM69 radio communications
Pull-up resistor for ICSP interference
R3 10K
C6 10uF
C5 100n
U2
RFM69W
NSS
MOSI
MISO
SCK
RESET
DIO0
DIO1
DIO2
DIO3
DIO4
DIO5
ANT
ANTENNA
JP1
Sensors and auxiliary connectors
JP2
HTU21D
JP4
OTHER
JP5
OTHER
JP6
OTHER
Node ID configuration switch
SW2
Node ID
ISP
JP3
MISO
SCK
RESET
MOSI
Voltage booster power supply
BATT_LVL
VB_EN_DIS
SJ2
L1 10uH
C8 47uF
C1 100n
C9 47uF
C11 100n
IC2
L6920
OUT
LX
GND
SHDN
FB
LBI
LBO
REF
JP7
Ammeter probe
BAT3
BAT4
1.5V - AA
AC energy measurement
RB1 470
RB2 330
R1 100K
R2 100K
C2 10uF
P$1
P$2
MUTUAL
CT1
m328p_rfm69_node
5/11/16 4:19 PM
Sheet: 1/1