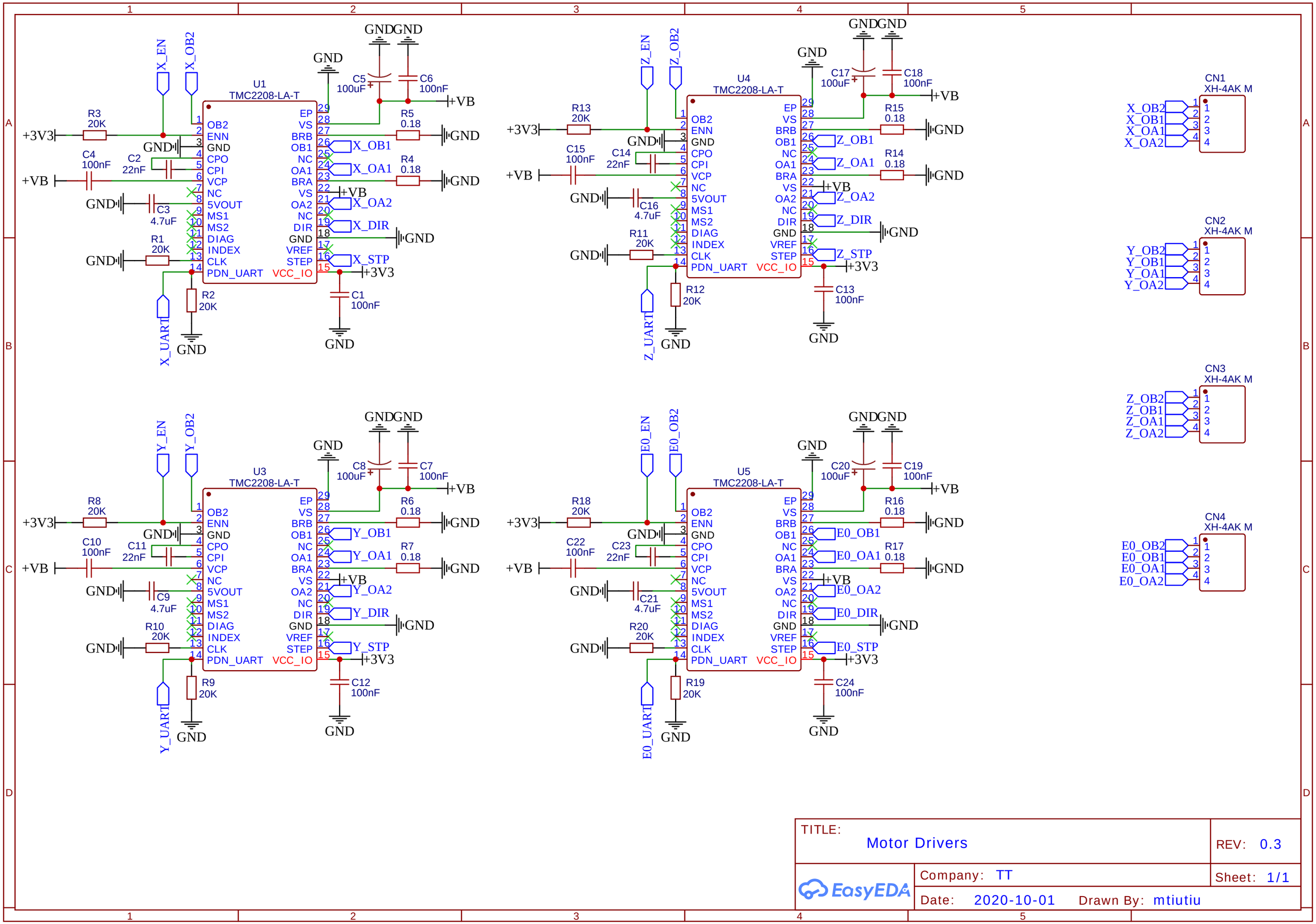
U1
TMC2208-LA-T
U4
TMC2208-LA-T
U3
TMC2208-LA-T
U5
TMC2208-LA-T
CN1
XH-4AK M
CN2
XH-4AK M
CN3
XH-4AK M
CN4
XH-4AK M
X_EN
X_OB2
X_UART
X_OB1
X_OA1
X_OA2
X_DIR
X_STP
Z_EN
Z_OB2
Z_UART
Z_OB1
Z_OA1
Z_OA2
Z_DIR
Z_STP
Y_EN
Y_OB2
Y_UART
Y_OB1
Y_OA1
Y_OA2
Y_DIR
Y_STP
E0_EN
E0_OB2
E0_UART
E0_OB1
E0_OA1
E0_OA2
E0_DIR
E0_STP
+3V3
+VB
GND
R1 20K
R2 20K
R3 20K
R4 0.18
R5 0.18
R6 0.18
R7 0.18
R8 20K
R9 20K
R10 20K
R11 20K
R12 20K
R13 20K
R14 0.18
R15 0.18
R16 0.18
R17 0.18
R18 20K
R19 20K
R20 20K
C1 100nF
C2 22nF
C3 4.7uF
C4 100nF
C5 100uF
C6 100nF
C7 100nF
C8 100uF
C9 4.7uF
C10 100nF
C11 22nF
C12 100nF
C13 100nF
C14 22nF
C15 100nF
C16 4.7uF
C17 100uF
C18 100nF
C19 100nF
C20 100uF
C21 4.7uF
C22 100nF
C23 22nF
C24 100nF
TITLE:
Motor Drivers
REV: 0.3
Company: TT
Sheet: 1/1
Date: 2020-10-01
Drawn By: mtiutiu
EasyEDA

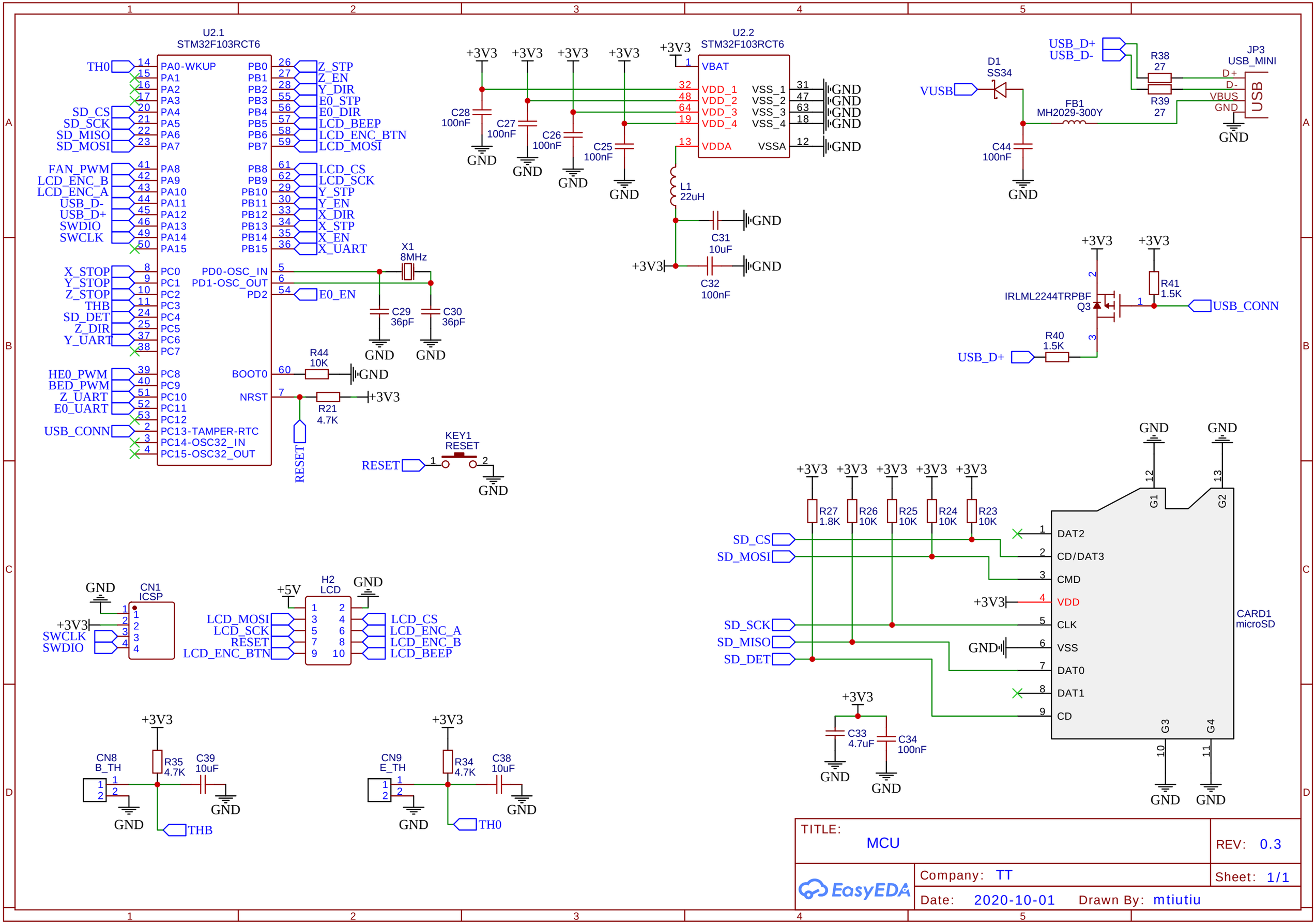
U2.1
STM32F103RCT6
U2.2
STM32F103RCT6
CN1
ICSP
H2
LCD
CN8
B_TH
CN9
E_TH
KEY1
RESET
X1
8MHz
JP3
USB_MINI
D1
SS34
FB1
MH2029-300Y
IRLML2244TRPBF
Q3
CARD1
microSD
TITLE:
MCU
REV: 0.3
Company: TT
Sheet: 1/1
Date: 2020-10-01
Drawn By: mtiutiu
EasyEDA

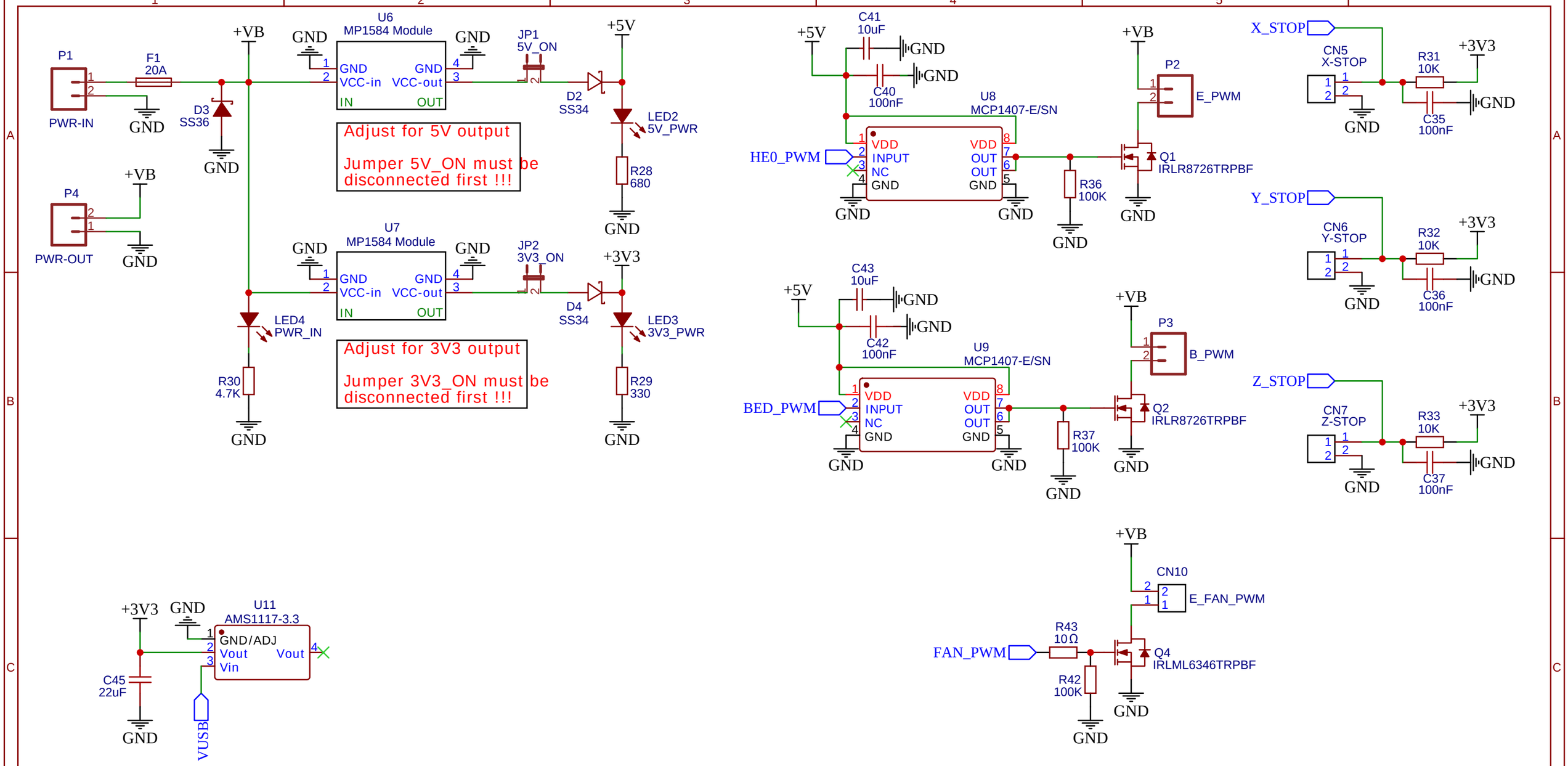

TITLE: Power Distribution/Control	REV: 0.3
Company: TT	Sheet: 1/1
Date: 2020-10-01 Drawn By: mtiutiu	