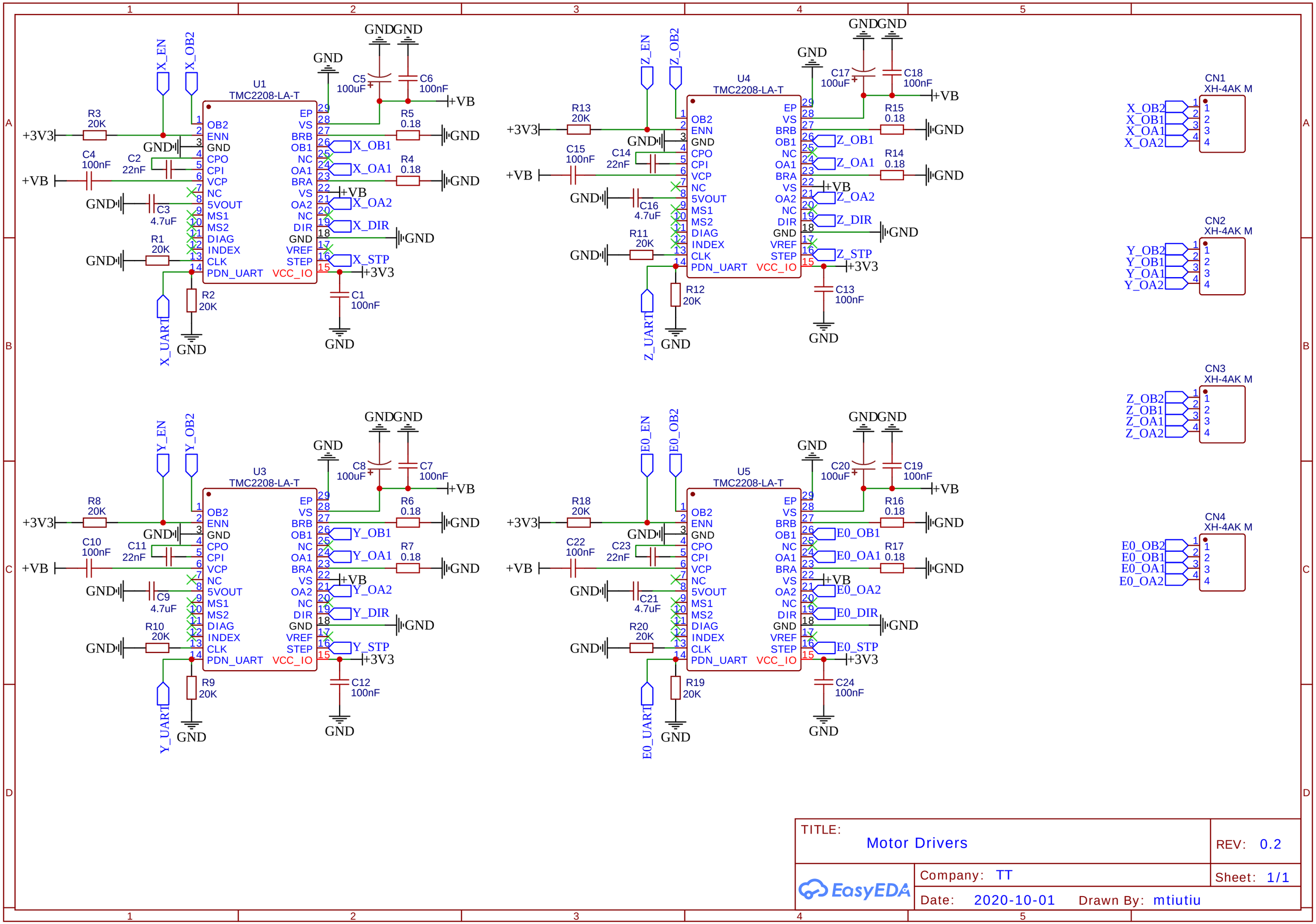

TITLE: Motor Drivers

REV: 0.2

Company: TT

Sheet: 1/1

Date: 2020-10-01

Drawn By: mtiutiu

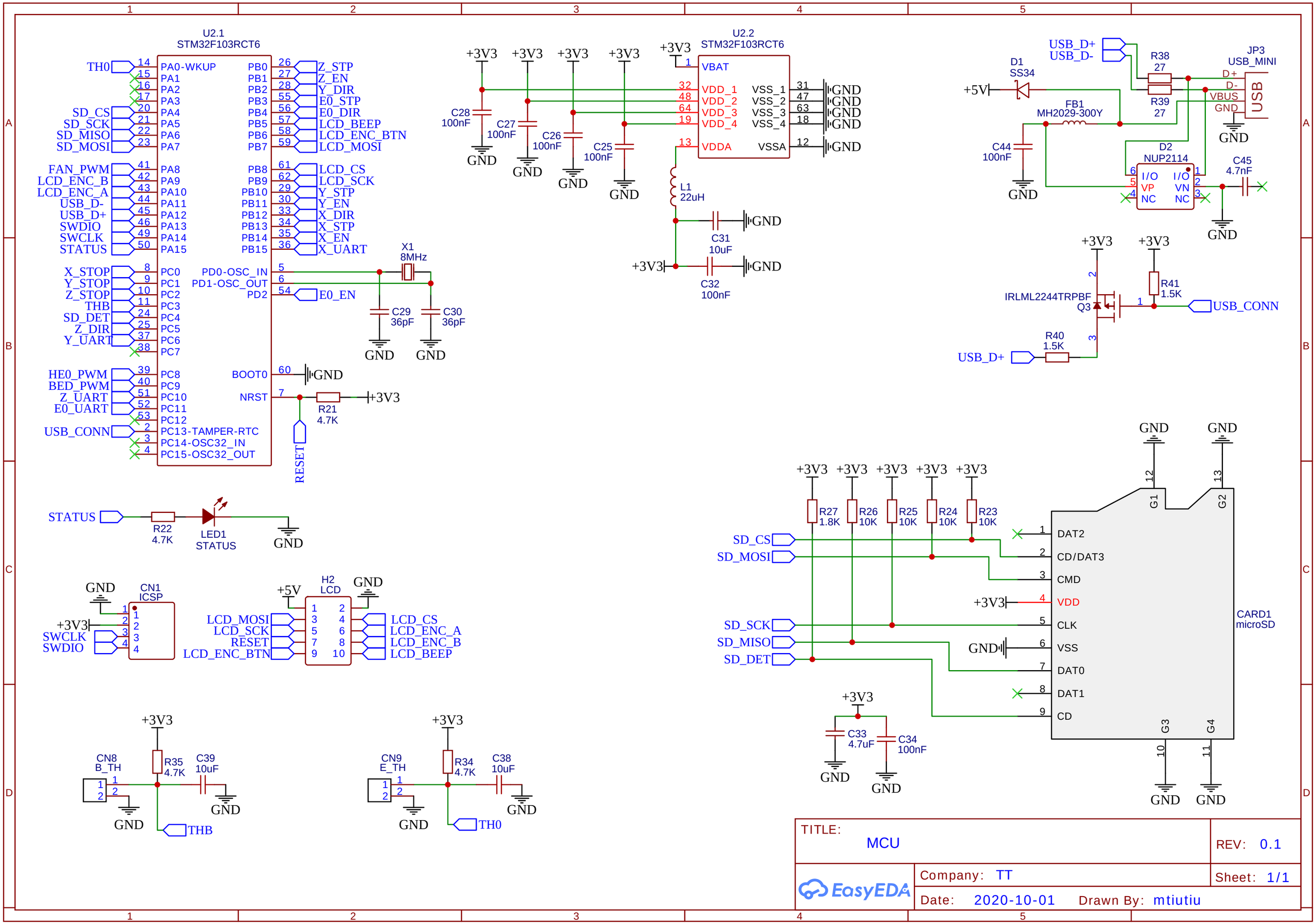

TITLE: MCU	REV: 0.1
Company: TT	Sheet: 1/1
Date: 2020-10-01 Drawn By: mtiutiu	

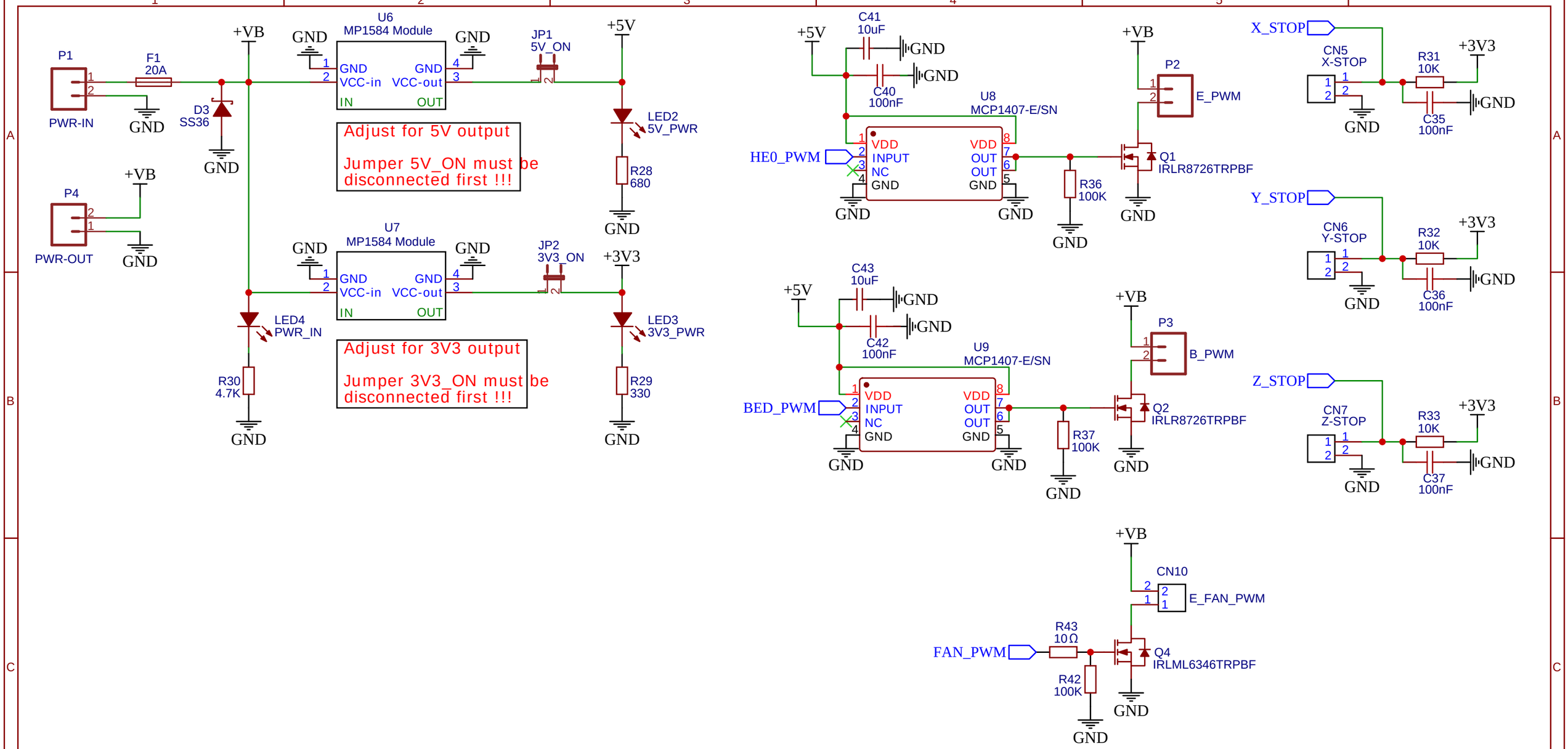

TITLE: Power Distribution/Control		REV: 0.1
EasyEDA	Company: TT	Sheet: 1/1
	Date: 2020-10-01 Drawn By: mtiutiu	