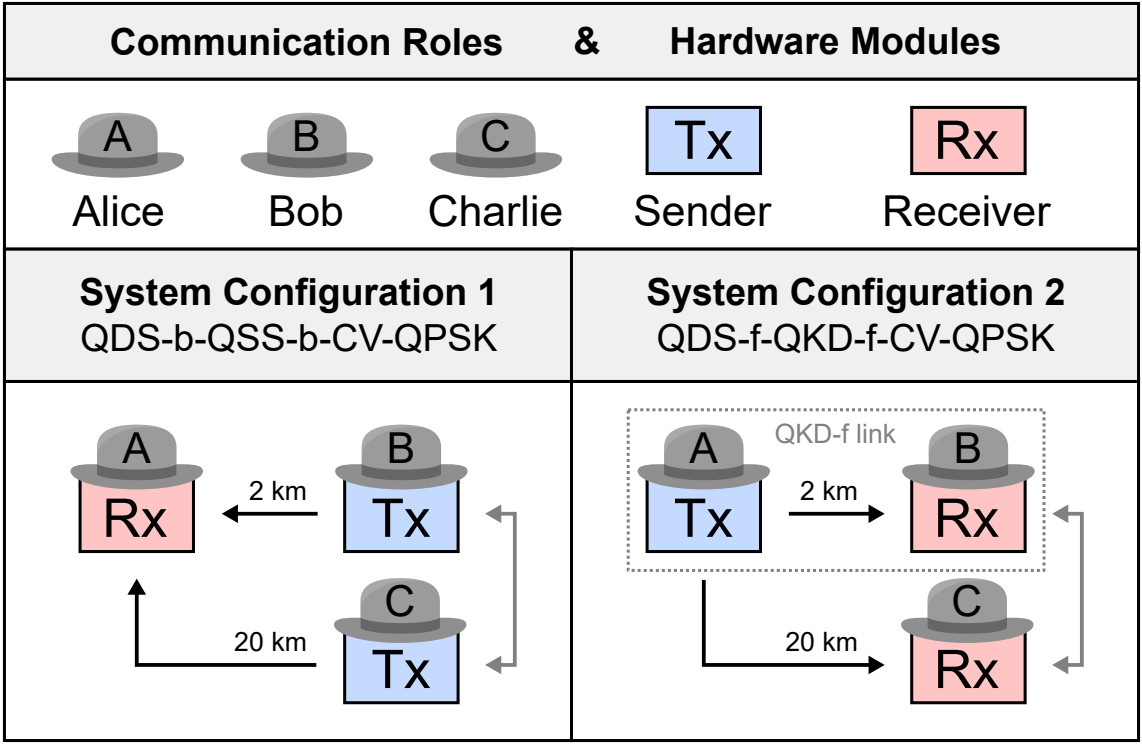
Communication Roles & Hardware Modules
A
Alice
B
Bob
C
Charlie
Tx
Sender
Rx
Receiver
System Configuration 1
QDS-b-QSS-b-CV-QPSK
System Configuration 2
QDS-f-QKD-f-CV-QPSK
A
Rx
2 km
B
Tx
20 km
C
Tx
QKD-f link
A
Tx
2 km
B
Rx
20 km
C
Rx