NICANNE revF

Class D Guitar Amplifier Series

Tarvs' Hobbytronics

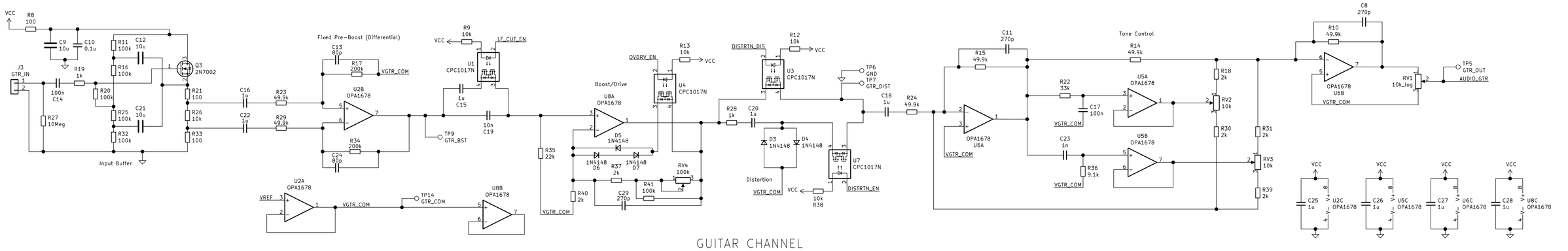

GUITAR CHANNEL

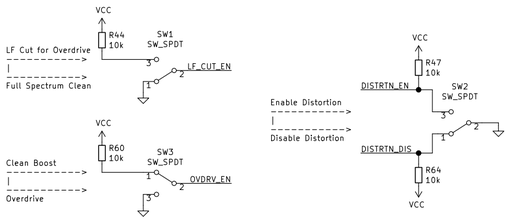

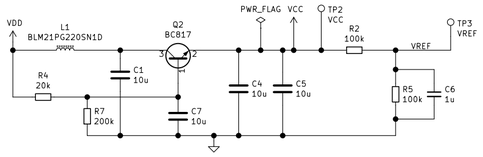

VCC & VIRTUAL GND REFERENCE

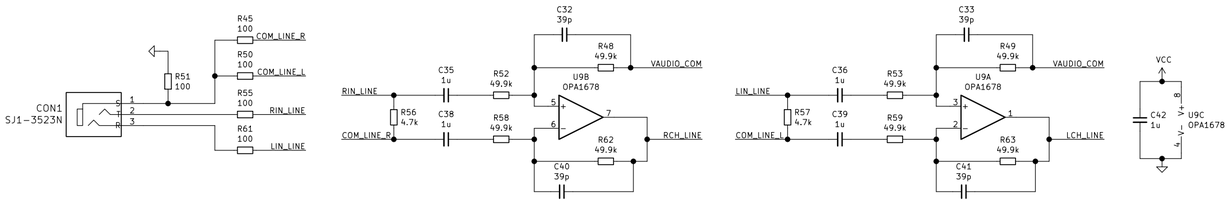

AUX CHANNEL

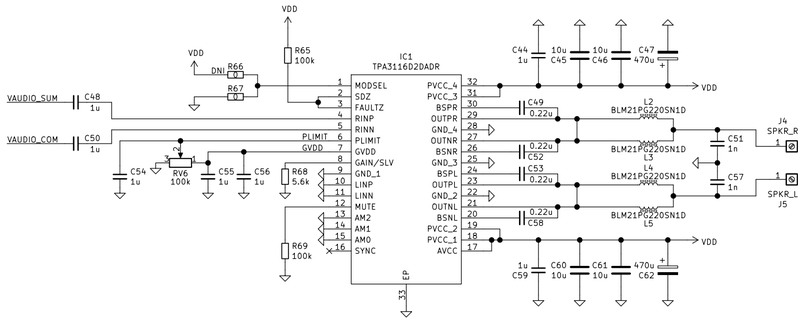

POWER AMPLIFIER

PIN		TYPE[1]	DESCRIPTION
NO.	NAME		
1	MODSEL	I	Mode selection logic input (LOW = BD mode, HIGH = 1 SPW mode). TTL logic levels with compliance to AVCC.
2	SDZ	I	Shutdown logic input for audio amp (LOW = outputs Hi-Z; HIGH = outputs enabled). TTL logic levels with compliance to AVCC.
3	FAULTZ	DO	General fault reporting including Over-temp, DC Detect. Open drain. FAULTZ = High: normal operation FAULTZ = Low: fault condition
4	RINP	I	Positive audio input for right channel. Biased at 3 V.
5	RINN	I	Negative audio input for right channel. Biased at 3 V.
6	PLIMIT	I	Power limit level adjust. Connect a resistor divider from GVDD to GND to set power limit. Connect directly to GVDD for no power limit.
7	GVDD	PO	Internally generated gate voltage supply. Not to be used as a supply or connected to any component other than a 1 µF X7R ceramic decoupling capacitor and the PLIMIT and GAIN/SLV resistor dividers.
8	GAIN/SLV	I	Selects Gain and selects between Master and Slave mode depending on pin voltage divider.
9	GND	G	Ground
10	LINP	I	Positive audio input for left channel. Biased at 3 V. Connect to GND for PBTL mode.
11	LINN	I	Negative audio input for left channel. Biased at 3 V. Connect to GND for PBTL mode.
12	MUTE	I	Mute signal for fast disable/enable of outputs (HIGH = outputs Hi-Z, LOW = outputs enabled). TTL logic levels with compliance to AVCC.
13	AM2	I	AM Avoidance Frequency Selection
14	AM1	I	AM Avoidance Frequency Selection
15	AM0	I	AM Avoidance Frequency Selection
16	SYNC	DIO	Clock input/output for synchronizing multiple class-D devices. Direction determined by GAIN/SLV terminal.
17	AVCC	P	Analog Supply
18	PVCC	P	Power supply
19	PVCC	P	Power supply
20	BSNL	BST	Boot strap for negative left channel output, connect to 220 nF X5R, or better ceramic cap to OUTNL
21	OUTNL	PO	Negative left channel output
22	GND	G	Ground
23	OUTPL	PO	Positive left channel output
24	BSPL	BST	Boot strap for positive left channel output, connect to 220 nF X5R, or better ceramic cap to OUTPL
25	GND	G	Ground
26	BSNR	BST	Boot strap for negative right channel output, connect to 220 nF X5R, or better ceramic cap to OUTNR
27	OUTNR	PO	Negative right channel output
28	GND	G	Ground
29	OUTPR	PO	Positive right channel output
30	BSPR	BST	Boot strap for positive right channel output, connect to 220 nF X5R or better ceramic cap to OUTPR
31	PVCC	P	Power supply
32	PVCC	P	Power supply
33	PowerPAD	G	Connect to GND for best system performance. If not connected to GND, leave floating.

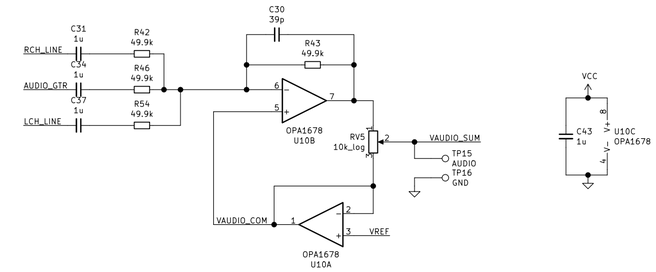

GUITAR + AUX CHANNEL MIXER

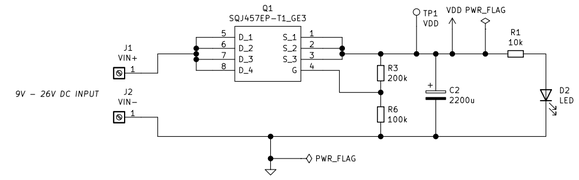

INPUT SUPPLY

NOTES:

* *GVDD = 7.0V*
* *Master Mode 20dB Gain: 5.6k from GAIN/SLV to GND*
* *Use TPA3116D2 for 100W version*
* *Use TPA3118D2 for 60W version*
* *Use TPA3130D2 for 30W version*

Mark Angelo Tarvina
mttarvina@gmail.com

Tarvs' Hobbytronics

Sheet: /
File: Nicanne_RevF.sch

Title: Nicanne: Class D Guitar Amplifier Series

Size: A2	Date: 2021-11-08	**Rev: F**
KiCad E.D.A. kicad (5.1.10)-1		Id: 1/1