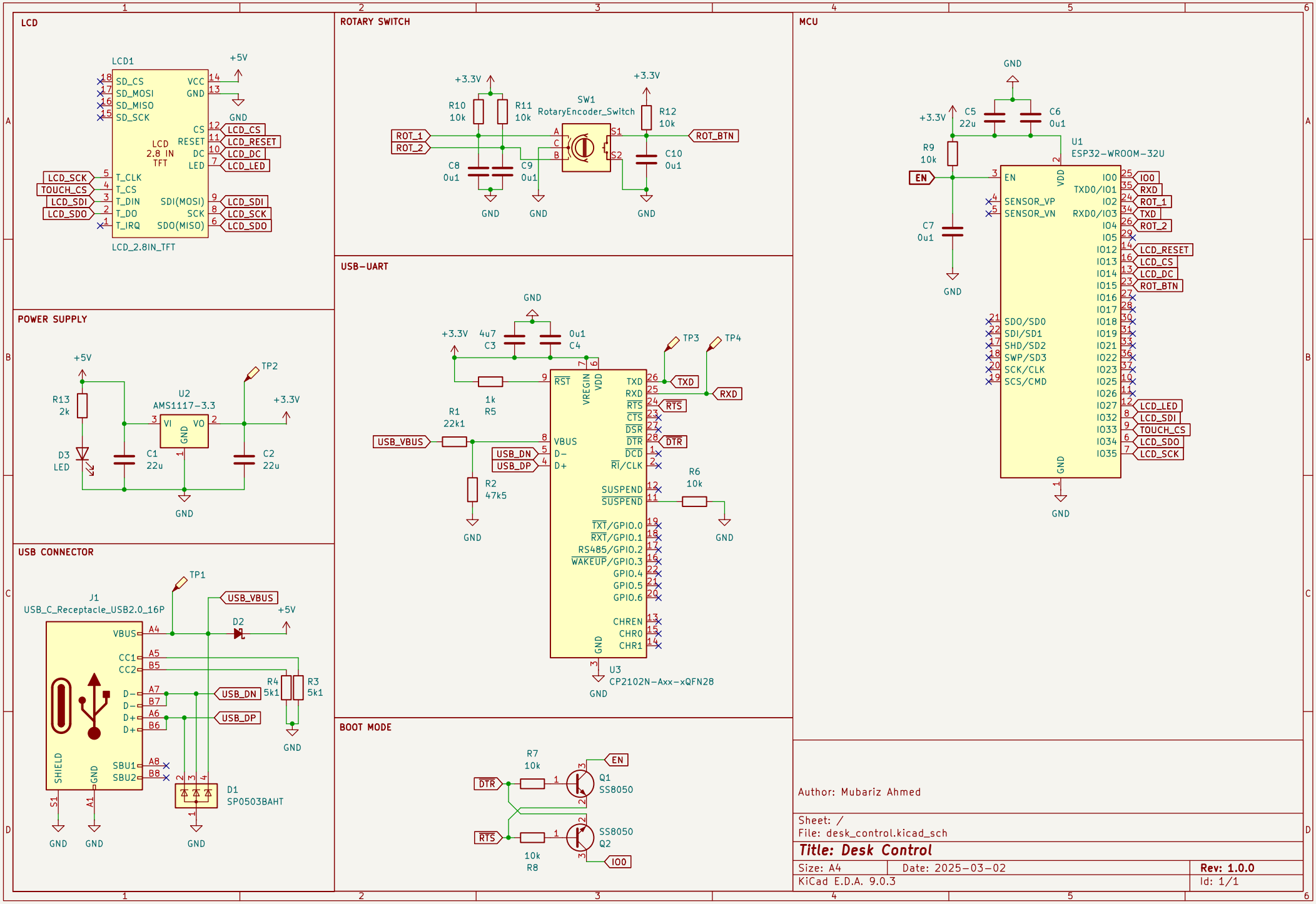
LCD
LCD1
LCD 2.8 IN TFT
LCD_2.8IN_TFT
SD_CS
SD_MOSI
SD_MISO
SD_SCK
VCC
GND
CS
RESET
DC
LED
T_CLK
T_CS
T_DIN
T_DO
T_IRQ
SDI(MOSI)
SCK
SDO(MISO)
LCD_SCK
TOUCH_CS
LCD_SDI
LCD_SDO
LCD_CS
LCD_RESET
LCD_DC
LCD_LED
+5V
GND
ROTARY SWITCH
SW1
RotaryEncoder_Switch
R10 10k
R11 10k
R12 10k
C8 0u1
C9 0u1
C10 0u1
+3.3V
ROT_1
ROT_2
ROT_BTN
USB-UART
U3
CP2102N-Axx-xQFN28
RST
VREGIN
VDD
VBUS
D-
D+
TXD
RXD
RTS
CTS
DSR
DTR
DCD
RI/CLK
SUSPEND
TXT/GPIO.0
RXT/GPIO.1
RS485/GPIO.2
WAKEUP/GPIO.3
GPIO.4
GPIO.5
GPIO.6
CHREN
CHR0
CHR1
4u7 C3
0u1 C4
1k R5
R1 22k1
R2 47k5
R6 10k
USB_VBUS
USB_DN
USB_DP
TP3
TP4
POWER SUPPLY
U2
AMS1117-3.3
VI
VO
GND
R13 2k
D3 LED
C1 22u
C2 22u
TP2
+3.3V
USB CONNECTOR
J1
USB_C_Receptacle_USB2.0_16P
TP1
VBUS
CC1
CC2
D-
D+
SHIELD
SBU1
SBU2
D2
R4 5k1
R3 5k1
D1
SP0503BAHT
BOOT MODE
R7 10k
R8 10k
Q1 SS8050
Q2 SS8050
DTR
RTS
EN
IO0
MCU
U1
ESP32-WROOM-32U
C5 22u
C6 0u1
R9 10k
C7 0u1
SENSOR_VP
SENSOR_VN
SDO/SD0
SDI/SD1
SHD/SD2
SWP/SD3
SCK/CLK
SCS/CMD
TXD0/IO1
RXD0/IO3
LCD_LED
LCD_SDI
TOUCH_CS
LCD_SDO
LCD_SCK
Author: Mubariz Ahmed
Sheet: /
File: desk_control.kicad_sch
Title: Desk Control
Size: A4
Date: 2025-03-02
Rev: 1.0.0
KiCad E.D.A. 9.0.3
Id: 1/1