PEARL ENGINEERS, PLANNERS & PROJECT MANAGERS

STRUCTURAL CALCULATION REPORT

Client Name

Client Address

Project Reference: 2024-06-

02 TOWERFIELDS WESTERHAM ROAD
BROMLEY, BR2 6HF

info@ Pearlepp.co.uk

www. Pearlepp.co.uk

Tel no. 02035763199

Document Control:

Purpose/Status	Date	Rev.	Comments	Structural Engineer
Approval Issue	11/06/2024		B'Regs Issue	MM

Disclaimer

This document has been prepared in accordance with the scope of PEPP appointment with its client and is subject to the terms of that appointment. It is confidential, addressed to and for the sole use and reliance of PEPP's client. PEPP accepts no liability for any use of this document other than by its client and only for the purposes, stated in the document, for which it was prepared and provided. No person other than the client may copy (in whole or in part) use or rely on the contents of this document, without the prior written permission of a director of PEPP. Any advice, opinions or recommendations within this document should be read and relied upon only in the context of the document as a whole. The contents of this document are not to be construed as providing legal, business or tax advice or opinion.

Project Information

Design Codes – Eurocodes and their respective National Annexes:

BS EN 1990. Eurocode 0: 'Basis of structural design'

BS EN 1991. Eurocode 1: 'Actions on structures'

BS EN 1992. Eurocode 2: 'Design of concrete structures'

BS EN 1993. Eurocode 3: 'Design of steel structures'

BS EN 1995. Eurocode 5: 'Design of timber structures'

BS EN 1996. Eurocode 6: 'Design of masonry structures' BS EN

1997. Eurocode 7: 'Geotechnical Design'

ASSUMPTIONS

THE FOLLOWING ASSUMPTIONS ARE MADE ABOUT THE SITE. THEY ARE TO BE CHECKED ON SITE BY THE CONTRACTOR AND BUILDING CONTROL OFFICER PRIOR TO THE START OF THE WORKS. ANY DIFFERENCES ARE TO BE REPORTED TO PEPP IMMEDIATELY;

1. The existing masonry is assumed to be minimum 3.6N/mm^2 blockwork in a 1:2:8 mortar
2. Floor joists are assumed to span as indicated on the drawings.
3. The external walls are assumed to be cavity brickwork.

NOTES

Contractor to check all dimensions before ordering any steel.

All material and workmanship must fully comply with all relevant current British Standard and Codes of practice.

PEPP PEARL ENGINEERS, PLANNERS & PROJECT MANAGERS	**Project:** 68 GROVE PARK RD UK		**Sheet No./Rev.** 4
	Job Ref. 2024-06-	**Structural Engineer** MM	**Date** 11/06/2024

02 TOWERFIELDS WESTERHAM ROAD
BROMLEY, BR2 6HF
Email: info@Pearlepp.co.uk
Website: www. pearlepp.co.uk
Tel no. 02035763199

ITEMS

1. **LOADING DETAILS**

2. **STEEL DESIGN**

Steel Beam Assembly 1

- **RB-1** UC 203 x 203 x 46 (BS4-1) (S275)
- **RB-2** UC 203 x 203 x 46 (BS4-1) (S275)
- **RB-3** UC 203 x 203 x 46 (BS4-1) (S275)
- **RB-4 (Cranked)** UC 203 x 203 x 60 (BS4-1) (S275)
- **RB-5 (Cranked)** UC 203 x 203 x 60 (BS4-1) (S275)
- **C-1, C2, C3, C4** UC 203 x 203 x 60 (BS4-1) (S275)
- **B-1** UB 203 x 102 x 23 (BS4-1) (S275)
- **B-2** UB 203 x 102 x 23 (BS4-1) (S275)
- **B-3** UC 152 x 152 x 23 (BS4-1) (S275)
- **B-4** UC 152 x 152 x 23 (BS4-1) (S275)
- **B-6** UC 152 x 152 x 23 (BS4-1) (S275)
- **B-7** UC 152 x 152 x 23 (BS4-1) (S275)
- **B-8** UC 152 x 152 x 23 (BS4-1) (S275)
- **B-9** UC 152 x 152 x 23 (BS4-1) (S275)
- **B-10** UC 203 x 203 x 60 (BS4-1) (S275)
- **B-11** UC 203 x 203 x 46 (BS4-1) (S275)
- **B-12** UC 203 x 203 x 60 (BS4-1) (S275)
- **B-13** UC 152 x 152 x 23 (BS4-1) (S275)
- **B-14** UC 203 x 203 x 46 (BS4-1) (S275)
- **B-15** UC 152 x 152 x 30 (BS4-1) (S275)
- **B-16** UC 152 x 152 x 30 (BS4-1) (S275)
- **B-17** UC 203 x 203 x 46 (BS4-1) (S275)
- **B-18** UC 203 x 203 x 46 (BS4-1) (S275)
- **B-19** UC 203 x 203 x 46 (BS4-1) (S275)

- **C-5, C6, C7, C8, C9, C10** SHS 100 x 100 x 10 (S275)
- **C-11, C12, C13, C14, C15, C16, C17, C18** SHS 100 x 100 x 10 (S275)
- **C-23** UC 152 x 152 x 30 (BS4-1) (S275)

Steel Beam Assembly 2

- **B-20** UC 254 x 254 x 89 (BS4-1) (S275)
- **C-19, C20** SHS 100 x 100 x 10 (S275)

- **B-21** UB 203 x 102 x 23 (BS4-1) (S275)

Steel Beam Assembly 3

- **B-22** UC 254 x 254 x 73 (BS4-1) (S275)
- **C-21, C-22** SHS 100 x 100 x 10 (S275)

Steel Beam Assembly 4

- **B-23** UB 152 x 89 x 16 (BS4-1) (S275)
- **B-24** UB 152 x 89 x 16 (BS4-1) (S275)
- **B-25** UB 152 x 89 x 16 (BS4-1) (S275)
- **B-26** UB 152 x 89 x 16 (BS4-1) (S275)
- **B-27** UB 152 x 89 x 16 (BS4-1) (S275)
- **B-28** UB 152 x 89 x 16 (BS4-1) (S275)
- **B-29** UB 203 x 133 x 30 (BS4-1) (S275)
- **B-30** UB 203 x 133 x 30 (BS4-1) (S275)
- **C-24, C-25, C-26, C-27** CHS 88.9 x 5 (S275)
- **C-28, C-29, C-30, C-31** SHS 100 x 100 x 5 (S275)

3. CONNECTION DESIGN

- **Connection-1**
- **Connection-2**

- **Connection-3**
- **Connection-4**
- **Connection-5**
- **Connection-6**
- **Connection-7**
- **Connection-8**
- **Connection-9**
- **Connection-10**
- **Connection-12**
- **Connection-13**
- **Connection-14**
- **Connection-15**
- **Connection-16**
- **Connection-17**
- **Connection-18**
- **Connection-19**
- **BP-1**
- **BP-2**
- **BP-3**
- **BP-4**
- **Splice Connection-1**
- **Splice Connection-2**
- **Splice Connection-3**
- **Splice Connection-4**

4. FOUNDATION DESIGN

- **Isolated Concrete Pad Footing 1**

  Provide 800 mm x 800 mm wide and 1000 mm deep concrete pad footing, Excavation depth to be decided by Building Control Inspector on site (Min 1000 mm).

- **Isolated Concrete Pad Footing 2**
  Provide 1000 mm x 1000 mm wide and 1000 mm deep concrete pad footing, Excavation depth to be decided by Building Control Inspector on site (Min 1000 mm).
- **Isolated Concrete Pad Footing 3**
  Provide 500 mm x 500 mm wide and 600 mm deep concrete pad footing, Excavation depth to be decided by Building Control Inspector on site (Min 1000 mm).
- **Isolated Reinforced Concrete Pad Footing 1**
  Provide 1100 mm x 1100 mm wide and 1000 mm deep reinforced concrete pad footing, Excavation depth to be decided by Building Control Inspector on site (Min 1000 mm).
- **Isolated Reinforced Concrete Pad Footing 2**
  Provide 1200 mm x 1200 mm wide and 1000 mm deep reinforced concrete pad footing, Excavation depth to be decided by Building Control Inspector on site (Min 1000 mm).
- **Isolated Reinforced Concrete Pad Footing 3**
  Provide 1300 mm x 1300 mm wide and 1000 mm deep reinforced concrete pad footing, Excavation depth to be decided by Building Control Inspector on site (Min 1000 mm).
- **Isolated Reinforced Concrete Pad Footing 4**
  Provide 1450 mm x 1450 mm wide and 1000 mm deep reinforced concrete pad footing, Excavation depth to be decided by Building Control Inspector on site (Min 1000 mm).

PEPP PEARL ENGINEERS, PLANNERS & PROJECT MANAGERS 02 TOWERFIELDS WESTERHAM ROAD BROMLEY, BR2 6HF Email: info@Pearlepp.co.uk Website: www. pearlepp.co.uk Tel no. 02035763199	**Project:** 68 GROVE PARK RD UK		**Sheet No./Rev.** 8
	Job Ref. 2024-06-	**Structural Engineer** **MM**	**Date** **11/06/2024**

1. LOADING DETAILS

PITCHED ROOF			
Clay Tiles	=	0.65	KN/m^2
Felt and battens	=	0.05	KN/m^2
Timber rafters	=	0.1	KN/m^2
Insulations and other membranes	=	0.1	KN/m^2
Ceiling and services	=	0.2	KN/m^2
Total dead load on the slope	**=**	**1.1**	KN/m^2
Live Load	**=**	**0.6**	KN/m^2
FLAT ROOF			
Waterproofing, Insulation	=	0.45	KN/m^2
Timber joist	=	0.2	KN/m^2
Plyboard decking	=	0.1	KN/m^2
Ceiling and services	=	0.2	KN/m^2
Total Dead Load	**=**	**0.95**	KN/m^2
Live Load	**=**	**0.6**	KN/m^2
LOFT FLOOR			
Plywood Flooring	=	0.15	KN/m^2
Timber Joists	=	0.2	KN/m^2
Insulation	=	0.05	KN/m^2
Ceiling and services	=	0.2	KN/m^2
Partitions	=	0.5	KN/m^2
Total dead load	**=**	**1.10**	KN/m^2
Live Load	**=**	**1.5**	KN/m^2
FIRST FLOOR			
Plywood Flooring	=	0.15	KN/m2
Timber Joists	=	0.2	KN/m2
Insulation	=	0.05	KN/m2
Ceiling and services	=	0.2	KN/m2
Partitions	=	0.5	KN/m^2
Total dead load	=	1.10	KN/m^2
Live Load	=	1.5	KN/m^2
WALL LOAD			
Brick wall (102 mm)	=	2	KN/m^2
Block wall with plaster	=	1.9	KN/m^2
Glazing	=	0.5	KN/m^2

2. STEEL DESIGN

Steel Beam Assembly 1

- **RB-1** UC 203 x 203 x 46 (BS4-1) (S275)
- **RB-2** UC 203 x 203 x 46 (BS4-1) (S275)
- **RB-3** UC 203 x 203 x 46 (BS4-1) (S275)
- **RB-4 (Cranked)** UC 203 x 203 x 60 (BS4-1) (S275)
- **RB-5 (Cranked)** UC 203 x 203 x 60 (BS4-1) (S275)
- **C-1, C2, C3, C4** UC 203 x 203 x 60 (BS4-1) (S275)
- **B-1** UB 203 x 102 x 23 (BS4-1) (S275)
- **B-2** UB 203 x 102 x 23 (BS4-1) (S275)
- **B-3** UC 152 x 152 x 23 (BS4-1) (S275)
- **B-4** UC 152 x 152 x 23 (BS4-1) (S275)
- **B-6** UC 152 x 152 x 23 (BS4-1) (S275)
- **B-7** UC 152 x 152 x 23 (BS4-1) (S275)
- **B-8** UC 152 x 152 x 23 (BS4-1) (S275)
- **B-9** UC 152 x 152 x 23 (BS4-1) (S275)
- **B-10** UC 203 x 203 x 60 (BS4-1) (S275)
- **B-11** UC 203 x 203 x 46 (BS4-1) (S275)
- **B-12** UC 203 x 203 x 60 (BS4-1) (S275)
- **B-13** UC 152 x 152 x 23 (BS4-1) (S275)
- **B-14** UC 203 x 203 x 46 (BS4-1) (S275)
- **B-15** UC 152 x 152 x 30 (BS4-1) (S275)
- **B-16** UC 152 x 152 x 30 (BS4-1) (S275)
- **B-17** UC 203 x 203 x 46 (BS4-1) (S275)
- **B-18** UC 203 x 203 x 46 (BS4-1) (S275)
- **B-19** UC 203 x 203 x 46 (BS4-1) (S275)
- **C-5, C6, C7, C8, C9, C10** SHS 100 x 100 x 10 (S275)
- **C-11, C12, C13, C14, C15, C16, C17, C18** SHS 100 x 100 x 10 (S275)
- **C-23** UC 152 x 152 x 30 (BS4-1) (S275)

Ridge Beam, RB-1:

Section UC 203 X 203 X 46 (BS4-1) (S-275)

We incorporated the following loads in our calculations for Ridge Beam RB-1.

Self-Weight: Auto incorporated by software using our steel sectional properties.

Factors used are;

Self-Weight = 1.0

Dead Load = 1.4

Live Load = 1.6

We had taken loadings being applied on our Ridge Beam RB-1:

- Flat Roof Load

Our load derivation for each source for Ridge Beam RB-1 is as follows;

Flat Roof Load;

Dead Load: 1.1 kN/m^2

Live Lead: 0.6 kN/m^2

Tributary Length = 2.9 m

Dead Load (UDL) = 1.1 x 2.9 = 3.19 kN/m

Live Load (UDL) = 0.6 x 2.9 = 1.74 kN/m

Total Dead Load (UDL) = 3.19 KN/m

Total Live Load (UDL) = 1.74 KN/m

Ridge Beam, RB-2:

Section UC 203 X 203 X 46 (BS4-1) (S-275)

We incorporated the following loads in our calculations for Ridge Beam RB-2.

Self-Weight: Auto incorporated by software using our steel sectional properties.

Factors used are;

Self-Weight = 1.0

Dead Load = 1.4

Live Load = 1.6

We had taken loadings being applied on our Ridge Beam RB-2:

- Flat Roof Load
- Pitched Roof Load

Our load derivation for each source for Ridge Beam RB-2 is as follows;

Flat Roof Load;

Dead Load: 1.1 kN/m^2

Live Lead: 0.6 kN/m^2

Tributary Length = 1.2 m

Dead Load (UDL) = 1.1 x 1.2 = 1.32 kN/m

Live Load (UDL) = 0.6 x 1.2 = 0.72 kN/m

Pitched Roof Load;

Dead Load: 1.1 kN/m^2

Live Lead: 0.6 kN/m^2

Tributary Length = 2 m

Dead load (UDL) = 1.1 x (1/cos(55)) x 2 = 3.83 KN/m

Live load (UDL) = 0.6 x (1/cos(55)) x 2 = 2.1 KN/m

Total Dead Load (UDL) = 5.15 KN/m

Total Live Load (UDL) = 2.82 KN/m

Ridge Beam, RB-3:

Section UC 203 X 203 X 46 (BS4-1) (S-275)

We incorporated the following loads in our calculations for Ridge Beam RB-3.

Self-Weight: Auto incorporated by software using our steel sectional properties.

Factors used are;

Self-Weight = 1.0

Dead Load = 1.4

Live Load = 1.6

We had taken loadings being applied on our Ridge Beam RB-3:

- Flat Roof Load
- Pitched Roof Load

Our load derivation for each source for Ridge Beam RB-3 is as follows;

Flat Roof Load;

Dead Load: 1.1 kN/m^2

Live Lead: 0.6 kN/m^2

Tributary Length = 1.7 m

Dead Load (UDL) = 1.1 x 1.7 = 1.87 kN/m

Live Load (UDL) = 0.6 x 1.7 = 1.02 kN/m

Pitched Roof Load;

Dead Load: 1.1 kN/m^2

Live Lead: 0.6 kN/m^2

Tributary Length = 2 m

Dead load (UDL) = 1.1 x (1/cos(55)) x 2 = 3.83 KN/m

Live load (UDL) = 0.6 x (1/cos(55)) x 2 = 2.1 KN/m

Total Dead Load (UDL) = 5.7 KN/m

Total Live Load (UDL) = 3.12 KN/m

Crank Beam, RB-4:

Section UC 203 X 203 X 60 (BS4-1) (S-275)

We incorporated the following loads in our calculations for Crank Beam RB-4.

Self-Weight: Auto incorporated by software using our steel sectional properties.

Factors used are;

Self-Weight = 1.0

Dead Load = 1.4

Live Load = 1.6

We had taken loadings being applied on our Crank Beam RB-4:

- Pitched Roof Load

Our load derivation for each source for Crank Beam RB-4 is as follows;

Pitched Roof Load;

Dead Load: 1.1 kN/m^2

Live Lead: 0.6 kN/m^2

Tributary Length = 2 m

Dead load (UDL) = 1.1 x (1/cos(55)) x 2 = 3.83 KN/m

Live load (UDL) = 0.6 x (1/cos(55)) x 2 = 2.1 KN/m

Total Dead Load (UDL) = 3.83 KN/m

Total Live Load (UDL) = 2.1 KN/m

Crank Beam, RB-5:

Section UC 203 X 203 X 60 (BS4-1) (S-275)

We incorporated the following loads in our calculations for Crank Beam RB-5.

Self-Weight: Auto incorporated by software using our steel sectional properties.

Factors used are;

Self-Weight = 1.0

Dead Load = 1.4

Live Load = 1.6

We had taken loadings being applied on our Crank Beam RB-5:

- Pitched Roof Load

Our load derivation for each source for Crank Beam RB-5 is as follows;

Pitched Roof Load;

Dead Load: 1.1 kN/m^2

Live Lead: 0.6 kN/m^2

Tributary Length = 2 m

Dead load (UDL) = 1.1 x (1/cos(55)) x 2 = 3.83 KN/m

Live load (UDL) = 0.6 x (1/cos(55)) x 2 = 2.1 KN/m

Total Dead Load (UDL) = 3.83 KN/m

Total Live Load (UDL) = 2.1 KN/m

Beam, B-1:

Section UB 203 X 102 X 23 (BS4-1) (S-275)

We incorporated the following loads in our calculations for Beam B-1.

Self-Weight: Auto incorporated by software using our steel sectional properties.

Factors used are;

Self-Weight = 1.0

Dead Load = 1.4

Live Load = 1.6

We had taken loadings being applied on our beam 'B-1':

- Pitched Roof Load
- Cavity Wall Load

Our load derivation for each source for Beam B-1 is as follows;

Pitched Roof Load;

Dead Load: 1.1 kN/m^2

Live Lead: 0.6 kN/m^2

Tributary Length = 2 m

Dead load (UDL) = 1.1 x (1/cos(55)) x 2 = 3.83 KN/m

Live load (UDL) = 0.6 x (1/cos(55)) x 2 = 2.1 KN/m

Cavity Wall Load;

Dead Load: 4.4 kN/m^2

Wall height = 2.7 m

Dead Load (UDL) = 11.88 kN/m

Total Dead Load (UDL) = 15.71 KN/m

Total Live Load (UDL) = 2.1 KN/m

Beam, B-2:

Section UB 203 X 102 X 23 (BS4-1) (S-275)

We incorporated the following loads in our calculations for Beam B-2.

Self-Weight: Auto incorporated by software using our steel sectional properties.

Factors used are;

Self-Weight = 1.0

Dead Load = 1.4

Live Load = 1.6

We had taken loadings being applied on our beam 'B-2':

- Pitched Roof Load
- Cavity Wall Load

Our load derivation for each source for Beam B-2 is as follows;

Pitched Roof Load;

Dead Load: 1.1 kN/m^2

Live Lead: 0.6 kN/m^2

Tributary Length = 2 m

Dead load (UDL) = 1.1 x (1/cos(55)) x 2 = 3.83 KN/m

Live load (UDL) = 0.6 x (1/cos(55)) x 2 = 2.1 KN/m

Cavity Wall Load;

Dead Load: 4.4 kN/m^2

Wall height = 2.7 m

Dead Load (UDL) = 11.88 kN/m

Total Dead Load (UDL) = 15.71 KN/m

Total Live Load (UDL) = 2.1 KN/m

Beam, B-3:

Section UC 152 X 152 X 23 (BS4-1) (S-275)

We incorporated the following loads in our calculations for Beam B-3.

Self-Weight: Auto incorporated by software using our steel sectional properties.

Factors used are;

Self-Weight = 1.0

Dead Load = 1.4

Live Load = 1.6

We had taken loadings being applied on our beam 'B-3':

- Stud Wall Load

Our load derivation for each source for Beam B-3 is as follows;

Stud Wall Load;

Dead Load: 0.55 kN/m^2

Wall height = 2.5 m

Dead Load (UDL) = 1.375 kN/m

Total Dead Load (UDL) = 1.375 KN/m

Beam, B-4:

Section UC 152 X 152 X 23 (BS4-1) (S-275)

We incorporated the following loads in our calculations for Beam B-3.

Self-Weight: Auto incorporated by software using our steel sectional properties.

Factors used are;

Self-Weight = 1.0

Dead Load = 1.4

Live Load = 1.6

We had taken loadings being applied on our beam 'B-3':

- Stud Wall Load

Our load derivation for each source for Beam B-3 is as follows;

<u>Stud Wall Load;</u>

Dead Load: 0.55 kN/m^2

Wall height = 2.5 m

Dead Load (UDL) = 1.375 kN/m

Total Dead Load (UDL) = 1.375 KN/m

<u>Beam, B-6:</u>

<u>Section UC 152 X 152 X 23 (BS4-1) (S-275)</u>

We incorporated the following loads in our calculations for Beam B-6.

Self-Weight: Auto incorporated by software using our steel sectional properties.

Factors used are;

Self-Weight = 1.0

Dead Load = 1.4

Live Load = 1.6

We had taken loadings being applied on our beam 'B-6':

- Pitched Roof Load
- Knee Wall Load

Our load derivation for each source for Beam B-6 is as follows;

<u>Pitched Roof Load;</u>

Dead Load: 1.1 kN/m^2

Live Load: 0.6 kN/m^2

Tributary Length = 2 m

Dead load (UDL) = 1.1 x (1/cos(55)) x 2 = 3.83 KN/m

Live load (UDL) = 0.6 x (1/cos(55)) x 2 = 2.1 KN/m

<u>Knee Wall Load;</u>

Dead Load: 0.55 kN/m^2

Wall height = 2 m

Dead Load (UDL) = 1.1 kN/m

Total Dead Load (UDL) = 4.93 KN/m

Total Live Load (UDL) = 2.1 KN/m

<u>Beam, B-7:</u>

<u>Section UC 152 X 152 X 23 (BS4-1) (S-275)</u>

We incorporated the following loads in our calculations for Beam B-7.

Self-Weight: Auto incorporated by software using our steel sectional properties.

Factors used are;

Self-Weight = 1.0

Dead Load = 1.4

Live Load = 1.6

We had taken loadings being applied on our beam B-7.

- Pitched Roof Load
- Knee Wall Load

Our load derivation for each source for Beam B-7 is as follows;

<u>Pitched Roof Load;</u>

Dead Load: 1.1 kN/m^2

Live Lead: 0.6 kN/m^2

Tributary Length = 2 m

Dead load (UDL) = 1.1 x (1/cos(55)) x 2 = 3.83 KN/m

Live load (UDL) = 0.6 x (1/cos(55)) x 2 = 2.1 KN/m

<u>Knee Wall Load;</u>

Dead Load: 0.55 kN/m^2

Wall height = 2 m

Dead Load (UDL) = 1.1 kN/m

Total Dead Load (UDL) = 4.93 KN/m

Total Live Load (UDL) = 2.1 KN/m

Beam, B-8:

Section UC 152 X 152 X 23 (BS4-1) (S-275)

We incorporated the following loads in our calculations for Beam B-8.

Self-Weight: Auto incorporated by software using our steel sectional properties.

Factors used are;

Self-Weight = 1.0

Dead Load = 1.4

Live Load = 1.6

We had taken loadings being applied on our beam 'B-8':

- Pitched Roof Load
- Knee Wall Load

Our load derivation for each source for Beam B-8 is as follows;

Pitched Roof Load;

Dead Load: 1.1 kN/m^2

Live Lead: 0.6 kN/m^2

Tributary Length = 2 m

Dead load (UDL) = 1.1 x (1/cos(55)) x 2 = 3.83 KN/m

Live load (UDL) = 0.6 x (1/cos(55)) x 2 = 2.1 KN/m

Knee Wall Load;

Dead Load: 0.55 kN/m^2

Wall height = 2 m

Dead Load (UDL) = 1.1 kN/m

Total Dead Load (UDL) = 4.93 KN/m

Total Live Load (UDL) = 2.1 KN/m

Beam, B-9:

Section UC 152 X 152 X 23 (BS4-1) (S-275)

We incorporated the following loads in our calculations for Beam B-9.

Self-Weight: Auto incorporated by software using our steel sectional properties.

Factors used are;

Self-Weight = 1.0

Dead Load = 1.4

Live Load = 1.6

We had taken loadings being applied on our beam 'B-9':

- Pitched Roof Load
- Knee Wall Load

Our load derivation for each source for Beam B-9 is as follows;

Pitched Roof Load;

Dead Load: 1.1 kN/m^2

Live Lead: 0.6 kN/m^2

Tributary Length = 2 m

Dead load (UDL) = 1.1 x (1/cos(55)) x 2 = 3.83 KN/m

Live load (UDL) = 0.6 x (1/cos(55)) x 2 = 2.1 KN/m

Knee Wall Load;

Dead Load: 0.55 kN/m^2

Wall height = 2 m

Dead Load (UDL) = 1.1 kN/m

Total Dead Load (UDL) = 4.93 KN/m

Total Live Load (UDL) = 2.1 KN/m

Beam, B-10:

Section UC 203 X 203 X 60 (BS4-1) (S-275)

We incorporated the following loads in our calculations for Beam B-10.

Self-Weight: Auto incorporated by software using our steel sectional properties.

Factors used are;

Self-Weight = 1.0

Dead Load = 1.4

Live Load = 1.6

We had taken loadings being applied on our beam ‘B-10’:

- Floor Load
- Pitched Roof Load
- Knee Wall Load

Our load derivation for each source for Beam B-10 is as follows;

Floor Load;

Dead Load: 1.1 kN/m^2

Live Lead: 1.5 kN/m^2

Tributary Length = 2.5 m

Dead Load (UDL) = 1.1 x 2.5 = 2.75 kN/m

Live Load (UDL) = 1.5 x 2.5 = 3.75 kN/m

Pitched Roof Load;

Dead Load: 1.1 kN/m^2

Live Lead: 0.6 kN/m^2

Tributary Length = 2 m

Dead load (UDL) = 1.1 x (1/cos(55)) x 2 = 3.83 KN/m

Live load (UDL) = 0.6 x (1/cos(55)) x 2 = 2.1 KN/m

Knee Wall Load;

Dead Load: 0.55 kN/m^2

Wall height = 2 m

Dead Load (UDL) = 1.1 kN/m

Total Dead Load (UDL) = 7.68 KN/m

Total Live Load (UDL) = 5.85 KN/m

Beam, B-11:

Section UC 203 X 203 X 46 (BS4-1) (S-275)

We incorporated the following loads in our calculations for Beam B-11.

Self-Weight: Auto incorporated by software using our steel sectional properties.

Factors used are;

Self-Weight = 1.0

Dead Load = 1.4

Live Load = 1.6

We had taken loadings being applied on our beam 'B-11':

- Floor Load
- Stud Wall Load

Our load derivation for each source for Beam B-11 is as follows;

Floor Load;

Dead Load: 1.1 kN/m^2

Live Load: 1.5 kN/m^2

Tributary Length = 3.3 m

Dead Load (UDL) = 1.1 x 3.3 = 2.75 kN/m

Live Load (UDL) = 1.5 x 3.3 = 3.75 kN/m

Stud Wall Load;

Dead Load: 0.55 kN/m^2

Wall height = 2 m

Dead Load (UDL) = 1.1 kN/m

Total Dead Load (UDL) = 3.85 KN/m

Total Live Load (UDL) = 3.75 KN/m

Beam, B-12:

Section UC 203 X 203 X 60 (BS4-1) (S-275)

We incorporated the following loads in our calculations for Beam B-12.

Self-Weight: Auto incorporated by software using our steel sectional properties.

Factors used are;

Self-Weight = 1.0

Dead Load = 1.4

Live Load = 1.6

We had taken loadings being applied on our beam 'B-12':

- Floor Load
- Stud Wall Load

Our load derivation for each source for Beam B-12 is as follows;

Floor Load;

Dead Load: 1.1 kN/m^2

Live Lead: 1.5 kN/m^2

Tributary Length = 2.4 m

Dead Load (UDL) = 1.1 x 2.4 = 2.64 kN/m

Live Load (UDL) = 1.5 x 2.4 = 3.6 kN/m

Knee Wall Load;

Dead Load: 0.55 kN/m^2

Wall height = 2 m

Dead Load (UDL) = 1.1 kN/m

Total Dead Load (UDL) = 3.74 KN/m

Total Live Load (UDL) = 3.6 KN/m

Beam, B-13:

Section UC 152 X 152 X 23 (BS4-1) (S-275)

We incorporated the following loads in our calculations for Beam B-13.

Self-Weight: Auto incorporated by software using our steel sectional properties.

Factors used are;

Self-Weight = 1.0

Dead Load = 1.4

Live Load = 1.6

We had taken loadings being applied on our beam 'B-13':

- Stud Wall Load

Our load derivation for each source for Beam B-13 is as follows;

Stud Wall Load;

Dead Load: 0.55 kN/m^2

Wall height = 2.5 m

Dead Load (UDL) = 1.375 kN/m

Total Dead Load (UDL) = 1.375 KN/m

Beam, B-14:

Section UC 203 X 203 X 46 (BS4-1) (S-275)

We incorporated the following loads in our calculations for Beam B-14.

Self-Weight: Auto incorporated by software using our steel sectional properties.

Factors used are;

Self-Weight = 1.0

Dead Load = 1.4

Live Load = 1.6

We had taken loadings being applied on our beam 'B-14':

- Beam & Block Floor Load
- Stud Wall Load

Our load derivation for each source for Beam B-14 is as follows;

Beam & Block Floor Load;

Dead Load: 2.53 kN/m^2

Live Lead: 1.5 kN/m^2

Tributary Length = 2.25 m

Dead Load (UDL) = 2.53 x 2.25 = 5.69 kN/m

Live Load (UDL) = 1.5 x 2.25 = 3.375 kN/m

Total Dead Load (UDL) = 5.69 KN/m

Total Live Load (UDL) = 3.6 KN/m

Beam, B-15:

Section UC 152 X 152 X 30 (BS4-1) (S-275)

We incorporated the following loads in our calculations for Beam B-15.

Self-Weight: Auto incorporated by software using our steel sectional properties.

Factors used are;

Self-Weight = 1.0

Dead Load = 1.4

Live Load = 1.6

We had taken loadings being applied on our beam 'B-15':

- Stud Wall Load

Our load derivation for each source for Beam B-15 is as follows;

Stud Wall Load;

Dead Load: 0.55 kN/m^2

Wall height = 2.5 m

Dead Load (UDL) = 1.375 kN/m

Total Dead Load (UDL) = 1.375 KN/m

Beam, B-16:

Section UC 152 X 152 X 30 (BS4-1) (S-275)

We incorporated the following loads in our calculations for Beam B-16.

Self-Weight: Auto incorporated by software using our steel sectional properties.

Factors used are;

Self-Weight = 1.0

Dead Load = 1.4

Live Load = 1.6

We had taken loadings being applied on our beam 'B-16':

- Stud Wall Load

Our load derivation for each source for Beam B-16 is as follows;

Stud Wall Load;

Dead Load: 0.55 kN/m^2

Wall height = 2.5 m

Dead Load (UDL) = 1.375 kN/m

Total Dead Load (UDL) = 1.375 KN/m

Beam, B-17:

Section UC 203 X 203 X 46 (BS4-1) (S-275)

We incorporated the following loads in our calculations for Beam B-17.

Self-Weight: Auto incorporated by software using our steel sectional properties.

Factors used are;

Self-Weight = 1.0

Dead Load = 1.4

Live Load = 1.6

We had taken loadings being applied on our beam 'B-17':

- Beam & Block Floor Load

Our load derivation for each source for Beam B-17 is as follows;

Beam & Block Floor Load;

Dead Load: 2.53 kN/m^2

Live Lead: 1.5 kN/m^2

Tributary Length = 3.5 m

Dead Load (UDL) = 2.53 x 3.5 = 8.85 kN/m

Live Load (UDL) = 1.5 x 3.5 = 5.25 kN/m

Total Dead Load (UDL) = 8.85 KN/m

Total Live Load (UDL) = 5.25 KN/m

Beam, B-18:

Section UC 203 X 203 X 46 (BS4-1) (S-275)

We incorporated the following loads in our calculations for Beam B-18.

Self-Weight: Auto incorporated by software using our steel sectional properties.

Factors used are;

Self-Weight = 1.0

Dead Load = 1.4

Live Load = 1.6

We had taken loadings being applied on our beam 'B-18':

- Beam & Block Floor Load

Our load derivation for each source for Beam B-18 is as follows;

Beam & Block Floor Load;

Dead Load: 2.53 kN/m^2

Live Lead: 1.5 kN/m^2

Tributary Length = 2.5 m

Dead Load (UDL) = 2.53 x 2.5 = 6.325 kN/m

Live Load (UDL) = 1.5 x 2.5 = 3.75 kN/m

Total Dead Load (UDL) = 6.33 KN/m

Total Live Load (UDL) = 3.75 KN/m

Beam, B-19:

Section UC 203 X 203 X 46 (BS4-1) (S-275)

We incorporated the following loads in our calculations for Beam B-19.

Self-Weight: Auto incorporated by software using our steel sectional properties.

Factors used are;

Self-Weight = 1.0

Dead Load = 1.4

Live Load = 1.6

We had taken loadings being applied on our beam (B-19).

- Beam & Block Floor Load

Our load derivation for each source for Beam B-19 is as follows;

Beam & Block Floor Load;

Dead Load: 2.53 kN/m^2

Live Lead: 1.5 kN/m^2

Tributary Length = 1 m

Dead Load (UDL) = 2.53 x 1 = 2.53 kN/m

Live Load (UDL) = 1.5 x 1 = 1.5 kN/m

Flat Roof Load;

Dead Load: 1.1 kN/m^2

Live Lead: 0.6 kN/m^2

Tributary Length = 1.8 m

Dead Load (UDL) = 1.1 x 1.1 = 1.21 kN/m

Live Load (UDL) = 0.6 x 1.1 = 0.66 kN/m

02 TOWERFIELDS WESTERHAM ROAD BROMLEY, BR2 6HF Email: info@Pearlepp.co.uk Website: www. pearlepp.co.uk Tel no. 02035763199	**Project:** 68 GROVE PARK RD UK		**Sheet No./Rev.** 31
	Job Ref. 2024-06-	**Structural Engineer** **MM**	**Date** **11/06/2024**

Total Dead Load (UDL) = 3.74 KN/m

Total Live Load (UDL) = 3.6 KN/m

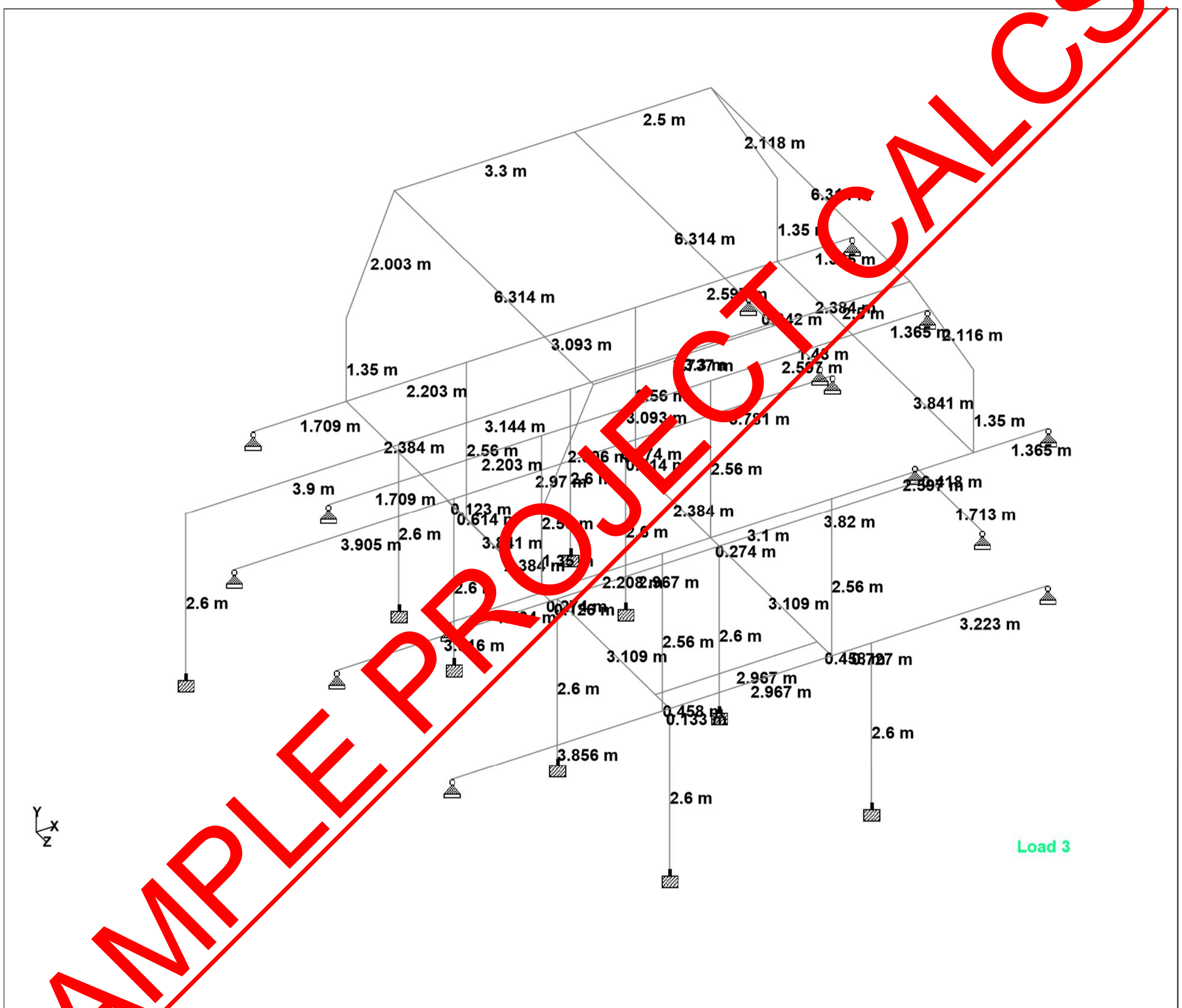

Whole Structure

PEPP PEARL ENGINEERS, PLANNERS & PROJECT MANAGERS 02 TOWERFIELDS WESTERHAM ROAD BROMLEY, BR2 6HF Email: info@Pearlepp.co.uk Website: www. pearlepp.co.uk Tel no. 02035763199	**Project:** 68 GROVE PARK RD UK		**Sheet No./Rev.** 32
	Job Ref. 2024-06-	**Structural Engineer** **MM**	**Date** **11/06/2024**

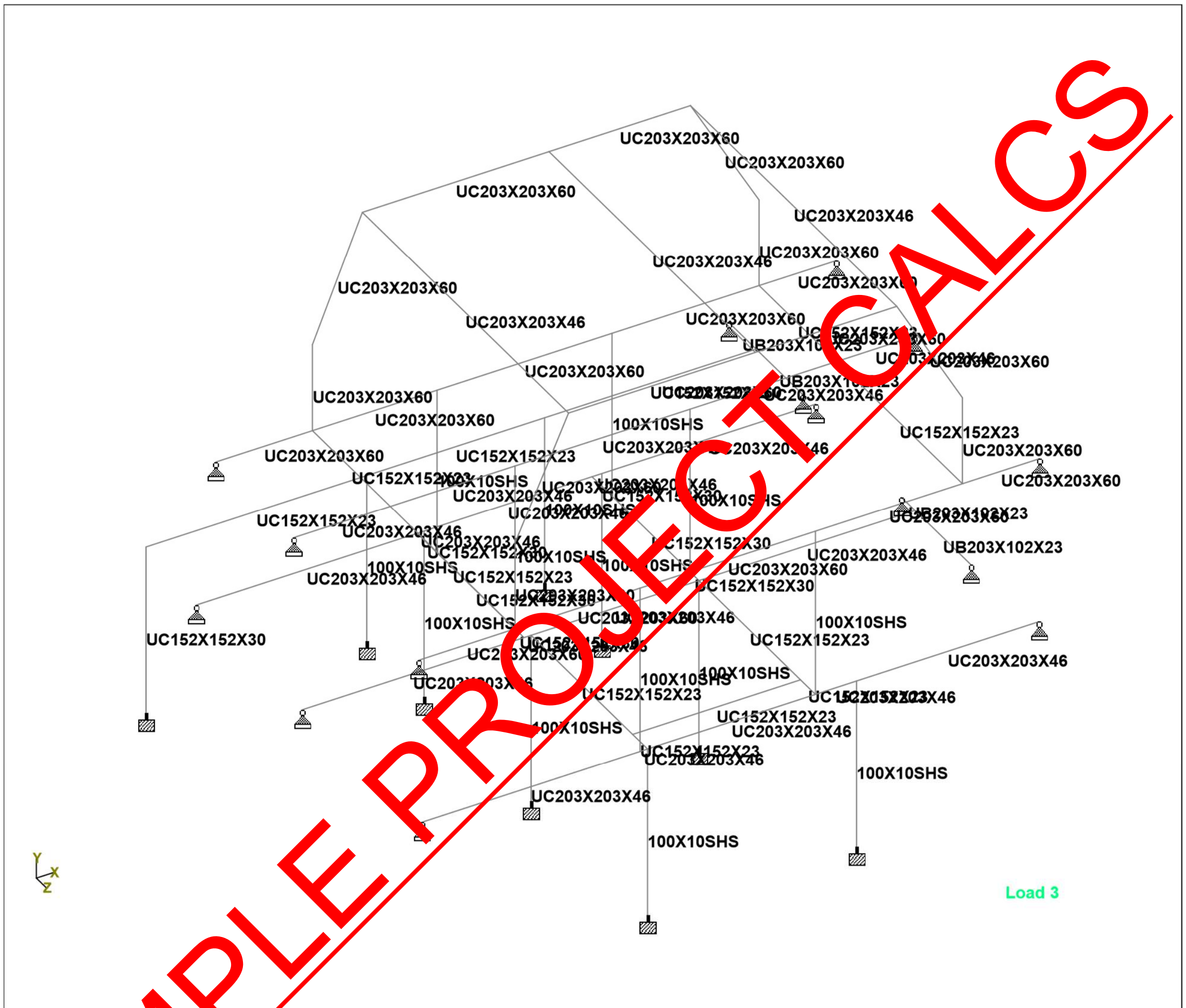

Whole Structure

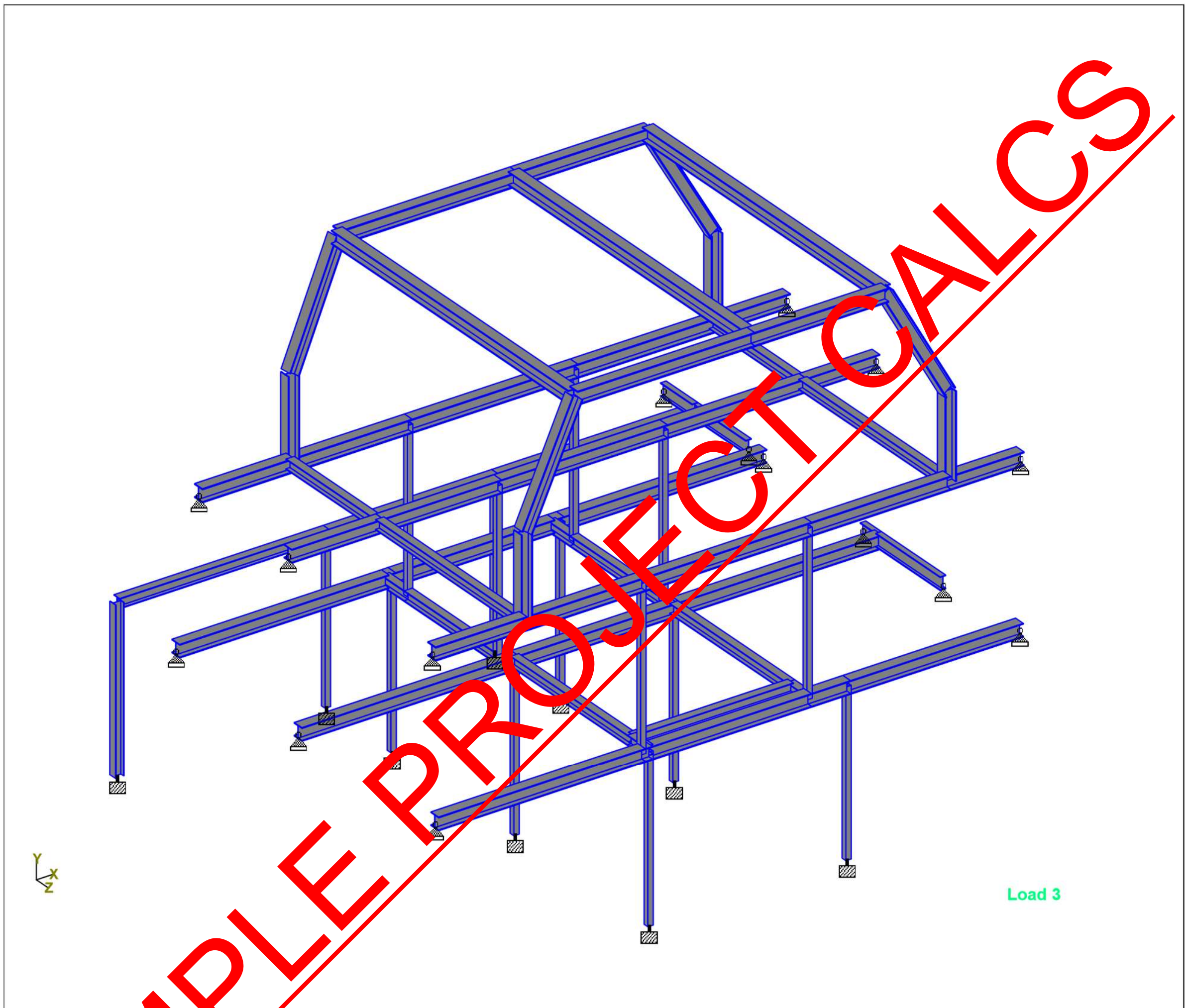

Whole Structure

Nodes

Node	X (m)	Y (m)	Z (m)
1	0	0	0
2	-3.989	0	0
3	2.967	0	0
4	3.694	0	0
5	6.917	0	0
6	0	-2.600	0
7	3.694	-2.600	0

8	-0.133	0	0
9	0	0	-0.458
10	2.967	0	-0.458
11	0	0	-3.567
12	2.967	0	-3.567
13	6.787	0	-3.567
14	6.787	0	-3.985
15	6.787	0	-1.854
16	-4.042	0	-3.567
17	-0.126	0	-3.567
18	-0.126	0	-3.841
19	-0.126	0	-6.225
20	2.967	0	-3.841
21	2.967	0	-6.225
22	-0.126	0	-6.839

Nodes Cont...

Node	X (m)	Y (m)	Z (m)
23	2.967	0	-6.839
24	-0.003	0	-6.839
25	3.141	[illegible]	-6.839
26	6.922	0	-6.839
27	-4.031	0	-6.839
28	-0.003	0	-8.591
29	3.141	0	-8.591
30	-3.903	0	-8.591
31	6.878	0	-8.591
32	6.878	0	-9.433
33	6.878	0	-7.161
39	-3.903	-2.600	-8.591
40	0	-2.600	-3.567
41	2.967	-2.600	-3.567
42	-0.003	-2.600	-6.839
43	3.141	-2.600	-6.839
44	2.967	2.560	0
45	-0.133	2.560	0
46	-0.126	2.560	-3.841
47	2.967	2.560	-3.841
48	-0.126	2.560	-6.225
49	2.967	2.560	-6.225

50	-0.003	-2.600	-8.591
51	3.141	-2.600	-8.591
52	-4.045	2.560	0
53	-2.341	2.560	0
54	5.564	2.560	0
55	6.929	2.560	0
56	-4.038	2.560	-3.841
57	-2.329	2.560	-3.841
58	5.564	2.560	-3.841
59	6.929	2.560	-3.841
60	-4.038	2.560	-6.225
61	-2.329	2.560	-6.225
62	5.564	2.560	-6.225
63	6.929	2.560	-6.225
64	-1.396	5.680	0
65	-2.341	3.910	0
66	5.564	3.910	0
67	-2.329	3.910	-6.225
68	5.564	3.910	-6.225
69	-1.396	5.680	-6.314
70	1.904	5.680	0
71	1.904	5.680	-6.314
72	4.404	5.680	0
73	4.404	5.680	-6.314

Beams

Beam	Node A	Node B	Length (m)	Property	□ (degrees)
1	2	3	3.856	4	0
2	1	6	2.600	3	0
3	1	3	2.967	4	0
4	3	4	0.727	4	0
5	4	7	2.600	3	0
6	4	5	3.223	4	0
7	8	1	0.133	4	0
8	1	9	0.458	5	0
9	9	10	2.967	5	0
10	10	3	0.458	5	0
11	11	9	3.109	5	0
12	12	10	3.109	5	0
13	12	13	3.820	4	0
14	13	15	1.713	6	0

15	13	14	0.418	6	0
16	16	17	3.916	4	0
17	17	11	0.126	4	0
18	17	18	0.274	1	0
19	11	12	2.967	4	0
20	22	19	0.614	1	0
21	19	18	2.384	1	0
22	23	21	0.614	1	0
23	21	20	2.384	1	0
24	20	12	0.274	1	0
25	22	24	0.123	4	0
26	24	23	2.970	4	0
27	23	25	0.174	4	0
28	27	22	3.905	4	0
29	25	26	3.781	4	0
30	30	28	3.900	5	0
31	28	29	3.144	5	0
32	29	31	3.737	5	0
33	31	32	0.842	6	0
34	31	33	1.430	6	0
35	30	35	2.600	1	0
39	11	40	2.600	3	0
40	12	41	2.600	3	0
41	24	42	2.600	3	0
42	25	43	2.600	3	0
43	8	45	2.560	3	0
44	3	44	2.560	3	0
45	18	46	2.560	3	0
46	20	47	2.560	3	0
47	19	48	2.560	3	0
48	21	49	2.560	3	0
49	50	28	2.600	3	0
50	51	29	2.600	3	0
51	52	53	1.704	7	0
52	53	45	2.208	7	0
53	45	44	3.100	7	0
54	44	54	2.597	7	0
55	54	55	1.365	7	0
56	46	57	2.203	4	0
57	57	56	1.709	4	0
58	57	53	3.841	5	0
59	46	47	3.093	4	0

60	47	58	2.597	4	0
61	58	59	1.365	4	0

Beams Cont...

Beam	Node A	Node B	Length (m)	Property	□ (degrees)
62	58	54	3.841	5	0
63	60	61	1.709	7	0
64	61	48	2.203	7	0
65	48	49	3.093	7	0
66	49	62	2.597	7	0
67	62	63	1.365	7	0
68	62	58	2.384	5	0
69	61	57	2.384	5	0
70	53	65	1.350	2	0
71	65	64	2.006	2	0
72	61	67	1.350	2	0
73	54	66	1.350	2	0
74	62	68	1.350	2	0
75	67	69	2.003	2	0
76	69	71	3.300	2	0
77	71	73	2.500	2	0
78	71	70	6.314	4	0
79	68	73	2.118	2	0
80	66	72	2.1[illegible]6	2	0
81	64	70	3.[illegible]00	2	0
82	70	72	2.500	2	0
83	64	[illegible]	6.31[illegible]	4	0
84	73	72	6.314	4	0

Section Properties

Prop	Section	Area (cm^2)	I_{yy} (cm^4)	I_{zz} (cm^4)	J (cm^4)	Material
1	UC152X152X30	38.300	560.000	1.75 E +3	10.500	STEEL
2	UC203X203X60	76.400	2.06 E +3	6.12 E +3	47.230	STEEL
3	100X10SHS	34.900	462.000	462.000	729.000	STEEL
4	UC203X203X46	58.700	1.55 E +3	4.57 E +3	22.200	STEEL
5	UC152X152X23	29.200	400.000	1.25 E +3	4.630	STEEL
6	UB203X102X23	29.400	164.000	2.1 E +3	7.020	STEEL
7	UC203X203X60	76.400	2.06 E +3	6.12 E +3	47.230	STEEL

Materials

Mat	Name	E (kN/mm^2)	□	Density (kg/m^3)	□ (/°C)

1	CONCRETE	21.718	0.170	2.4 E +3	10 E -6
2	ALUMINUM	68.948	0.330	2.71 E +3	23 E -6
3	STEEL_50_KSI	199.948	0.300	7.83 E +3	11.7 E -6
4	STAINLESSSTEEL	197.930	0.300	7.83 E +3	18 E -6
5	STEEL_36_KSI	199.948	0.300	7.83 E +3	11.7 E -6
6	STEEL_275_NMM2	205.000	0.300	7.85 E +3	12 E -6
7	STEEL	205.000	0.300	7.83 E +3	12 E -6
8	STEEL_355_NMM2	205.000	0.300	7.85 E +3	12 E -6

Supports

Node	X (kN/mm)	Y (kN/mm)	Z (kN/mm)	rX (kN·m/deg)	rY (kN·m/deg)	rZ (kN·m/deg)
2	Fixed	Fixed	Fixed	-	-	-
5	Fixed	Fixed	Fixed	-	-	-
6	Fixed	Fixed	Fixed	Fixed	Fixed	Fixed
7	Fixed	Fixed	Fixed	Fixed	Fixed	Fixed
14	Fixed	Fixed	Fixed	-	-	-
15	Fixed	Fixed	Fixed	-	-	-
16	Fixed	Fixed	Fixed	-	-	-
26	Fixed	Fixed	Fixed	-	-	-
27	Fixed	Fixed	Fixed	-	-	-
32	Fixed	Fixed	Fixed	-	-	-
33	Fixed	Fixed	Fixed	-	-	-
35	Fixed	Fixed	Fixed	Fixed	Fixed	Fixed
40	Fixed	Fixed	Fixed	Fixed	Fixed	Fixed
41	Fixed	Fixed	Fixed	Fixed	Fixed	Fixed
42	Fixed	Fixed	Fixed	Fixed	Fixed	Fixed
43	Fixed	Fixed	Fixed	Fixed	Fixed	Fixed
50	Fixed	Fixed	Fixed	Fixed	Fixed	Fixed
51	Fixed	Fixed	Fixed	Fixed	Fixed	Fixed
52	Fixed	Fixed	Fixed	-	-	-
55	Fixed	Fixed	Fixed	-	-	-
56	Fixed	Fixed	Fixed	-	-	-
59	Fixed	Fixed	Fixed	-	-	-
60	Fixed	Fixed	Fixed	-	-	-
63	Fixed	Fixed	Fixed	-	-	-

Releases

There is no data of this type.

Primary Load Cases

Number	Name	Type
1	DL	Dead
2	LL	Live

Combination Load Cases

Comb.	Combination L/C Name	Primary	Primary L/C Name	Factor
3	UNFACTORED	1	DL	1.00
		2	LL	1.00
4	FACTORED	1	DL	1.40
		2	LL	1.60

Load Generators

There is no data of this type.

Direction	Factor	Assigned Geometry

Y	-1.000	1 - 35, 39 - 84

1 DL : Beam Loads

Beam	Type		Direction	Fa	Da (m)	Fb	Db	Ecc. (m)
1	UNI	kN/m	GY	-5.690	-	-	-	-
3	UNI	kN/m	GY	-5.690	-	-	-	-
4	UNI	kN/m	GY	-5.690	-	-	-	-
6	UNI	kN/m	GY	-5.690	-	-	-	-
11	UNI	kN/m	GY	-1.375	-	-	-	-
12	UNI	kN/m	GY	-1.375	-	-	-	-
13	UNI	kN/m	GY	-8.850	-	-	-	-
14	UNI	kN/m	GY	-15.710	-	-	-	-
15	UNI	kN/m	GY	-15.710	-	-	-	-
16	UNI	kN/m	GY	-8.850	-	-	-	-
19	UNI	kN/m	GY	-8.850	-	-	-	-
20	UNI	kN/m	GY	-1.375	-	-	-	-
21	UNI	kN/m	GY	-1.375	-	-	-	-
23	UNI	kN/m	GY	-1.375	-	-	-	-
26	UNI	kN/m	GY	-6.325	-	-	-	-
28	UNI	kN/m	GY	-6.325	-	-	-	-
29	UNI	kN/m	GY	-6.325	-	-	-	-
30	UNI	kN/m	GY	-3.7[illegible]	-	-	-	-
31	UNI	kN/m	GY	-3.740	-	-	-	-
32	UNI	kN/m	GY	-3.740	-	-	-	-
33	UNI	kN/m	GY	-15.710	-	-	-	-
34	UNI	kN/m	GY	-15.710	-	-	-	-
51	UNI	kN/m	GY	-7.680	-	-	-	-
52	UNI	kN/m	GY	-7.680	-	-	-	-
53	UNI	kN/m	GY	-7.680	-	-	-	-
54	UNI	kN/m	GY	-7.680	-	-	-	-
55	UNI	kN/m	GY	-7.680	-	-	-	-
56	UNI	kN/m	GY	-3.850	-	-	-	-
57	UNI	kN/m	GY	-3.850	-	-	-	-
58	UNI	kN/m	GY	-4.930	-	-	-	-
59	UNI	kN/m	GY	-3.850	-	-	-	-
60	UNI	kN/m	GY	-3.850	-	-	-	-
61	UNI	kN/m	GY	-3.850	-	-	-	-
62	UNI	kN/m	GY	-4.930	-	-	-	-
63	UNI	kN/m	GY	-3.740	-	-	-	-
64	UNI	kN/m	GY	-3.740	-	-	-	-

65	UNI	kN/m	GY	-3.740	-	-	-	-
66	UNI	kN/m	GY	-3.740	-	-	-	-
67	UNI	kN/m	GY	-3.740	-	-	-	-
68	UNI	kN/m	GY	-4.930	-	-	-	-
69	UNI	kN/m	GY	-4.930	-	-	-	-
76	UNI	kN/m	GY	-3.830	-	-	-	-
77	UNI	kN/m	GY	-3.830	-	-	-	-
78	UNI	kN/m	GY	-3.190	-	-	-	-
81	UNI	kN/m	GY	-3.830	-	-	-	-
82	UNI	kN/m	GY	-3.830	-	-	-	-
83	UNI	kN/m	GY	-5.700	-	-	-	-
84	UNI	kN/m	GY	-5.150	-	-	-	-

1 DL : Selfweight

2 LL : Beam Loads

Beam	Type		Direction	Fa	Da (m)	Fb	Db	Ecc. (m)
1	UNI	kN/m	GY	-3.600	-	-	-	-
3	UNI	kN/m	GY	-3.600	-	-	-	-
4	UNI	kN/m	GY	-3.600	-	-	-	-
6	UNI	kN/m	GY	-3.600	-	-	-	-
13	UNI	kN/m	GY	-5.250	-	-	-	-
14	UNI	kN/m	GY	-2.100	-	-	-	-
15	UNI	kN/m	GY	-2.100	-	-	-	-
16	UNI	kN/m	GY	-5.250	-	-	-	-
19	UNI	kN/m	GY	-5.250	-	-	-	-
26	UNI	kN/m	GY	-3.750	-	-	-	-
28	UNI	kN/m	GY	-3.750	-	-	-	-
29	UNI	kN/m	GY	-3.750	-	-	-	-
30	UNI	kN/m	GY	-3.600	-	-	-	-
31	UNI	kN/m	GY	-3.600	-	-	-	-
32	UNI	kN/m	GY	-3.600	-	-	-	-
33	UNI	kN/m	GY	-2.100	-	-	-	-
34	UNI	kN/m	GY	-2.100	-	-	-	-
51	UNI	kN/m	GY	-5.850	-	-	-	-
52	UNI	kN/m	GY	-5.850	-	-	-	-
53	UNI	kN/m	GY	-5.850	-	-	-	-
54	UNI	kN/m	GY	-5.850	-	-	-	-
55	UNI	kN/m	GY	-5.850	-	-	-	-
56	UNI	kN/m	GY	-3.750	-	-	-	-
57	UNI	kN/m	GY	-3.750	-	-	-	-

PEPP
PEARL ENGINEERS, PLANNERS & PROJECT MANAGERS
02 TOWERFIELDS WESTERHAM ROAD
BROMLEY, BR2 6HF
Email: info@Pearlepp.co.uk
Website: www. pearlepp.co.uk
Tel no. 02035763199

58	UNI	kN/m	GY	-2.930	-	-	-	-
59	UNI	kN/m	GY	-3.750	-	-	-	-
60	UNI	kN/m	GY	-3.750	-	-	-	-
61	UNI	kN/m	GY	-3.750	-	-	-	-
62	UNI	kN/m	GY	-2.930	-	-	-	-
63	UNI	kN/m	GY	-3.600	-	-	-	-
64	UNI	kN/m	GY	-3.600	-	-	-	-
65	UNI	kN/m	GY	-3.600	-	-	-	-
66	UNI	kN/m	GY	-3.600	-	-	-	-
67	UNI	kN/m	GY	-3.600	-	-	-	-
68	UNI	kN/m	GY	-2.930	-	-	-	-
69	UNI	kN/m	GY	-2.930	-	-	-	-
76	UNI	kN/m	GY	-2.100	-	-	-	-
77	UNI	kN/m	GY	-2.100	-	-	-	-
78	UNI	kN/m	GY	-1.740	-	-	-	-
81	UNI	kN/m	GY	-2.100	-	-	-	-
82	UNI	kN/m	GY	-2.100	-	-	-	-
83	UNI	kN/m	GY	-3.120	-	-	-	-
84	UNI	kN/m	GY	-2.820	-	-	-	-

Node Displacement Summary

	Node	L/C	X (mm)	Y (mm)	Z (mm)	Resultant (mm)	rX (rad)	rY (rad)	rZ (rad)
Max X	30	4:FACTORED	1.710	-0.071	-0.025	1.711	-0.000	-0.000	-0.003
Min X	72	4:FACTORED	-2.553	-13.455	-6.312	15.281	-0.008	0.001	0.004
Max Y	2	1:DL	0	0	0	0	0.000	0.000	-0.001
Min Y	71	4:FACTORED	-2.651	-21.935	-7.513	23.337	0.009	-0.000	0.001
Max Z	49	4:FACTORED	0.009622	-5.773	2.312	6.219	-0.001	0.001	-0.002
Min Z	67	4:FACTORED	-2.264	-13.579	-8.774	16.325	-0.007	-0.010	0.002
Max rX	22	4:FACTORED	-0.001	-0.795	-0.407	0.894	0.011	0.000	0.002
Min rX	64	4:FACTORED	-3.347	-11.706	-7.216	14.153	-0.009	-0.001	-0.003
Max rY	65	4:FACTORED	-3.107	-11.689	0.790	12.121	0.001	0.007	0.002
Min rY	67	4:FACTORED	-2.264	-13.579	-8.774	16.325	-0.007	-0.010	0.002
Max rZ	55	4:FACTORED	0	0	0	0	-0.001	0.000	0.010
Min rZ	60	4:FACTORED	0	0	0	0	-0.005	0.000	-0.011
Max Rst	71	4:FACTORED	-2.651	-21.935	-7.513	23.337	0.009	-0.000	0.001

Beam Displacement Detail Summary

Displacements shown in italic indicate the presence of an offset

	Beam	L/C	d (m)	X (mm)	Y (mm)	Z (mm)	Resultant (mm)
Max X	49	4:FACTORED	2.080	1.978	-0.117	0.094	1.984

02 TOWERFIELDS WESTERHAM ROAD
BROMLEY, BR2 6HF
Email: info@Pearlepp.co.uk
Website: www. pearlepp.co.uk
Tel no. 02035763199

Min X	84	4:FACTORED	3.157	-5.742	-30.210	-6.275	31.384
Max Y	12	4:FACTORED	0.933	-0.034	1.055	-1.050	1.489
Min Y	78	4:FACTORED	3.157	-2.998	-39.151	-7.485	39.973
Max Z	47	4:FACTORED	1.280	1.402	-7.589	4.092	8.735
Min Z	75	4:FACTORED	1.001	-3.296	-13.159	-9.776	16.721
Max Rst	78	4:FACTORED	3.157	-2.998	-39.151	-7.485	39.973

Beam End Displacement Summary

Displacements shown in italic indicate the presence of an offset

	Beam	Node	L/C	X (mm)	Y (mm)	Z (mm)	Resultant (mm)
Max X	30	30	4:FACTORED	1.710	-0.071	-0.026	1.711
Min X	80	72	4:FACTORED	-3.553	-13.455	-6.312	15.281
Max Y	1	2	1:DL	0	0	0	0
Min Y	76	71	4:FACTORED	-2.651	-21.935	-7.513	23.337
Max Z	48	49	4:FACTORED	0.010	-5.773	2.312	6.219
Min Z	72	67	4:FACTORED	-2.264	-13.579	-8.774	16.325
Max Rst	76	71	4:FACTORED	-2.651	-21.935	-7.513	23.337

PEPP PEARL ENGINEERS, PLANNERS & PROJECT MANAGERS 02 TOWERFIELDS WESTERHAM ROAD BROMLEY, BR2 6HF Email: info@Pearlepp.co.uk Website: www. pearlepp.co.uk Tel no. 02035763199	**Project:** 68 GROVE PARK RD UK		**Sheet No./Rev.** 44
	Job Ref. 2024-06-	**Structural Engineer** **MM**	**Date** **11/06/2024**

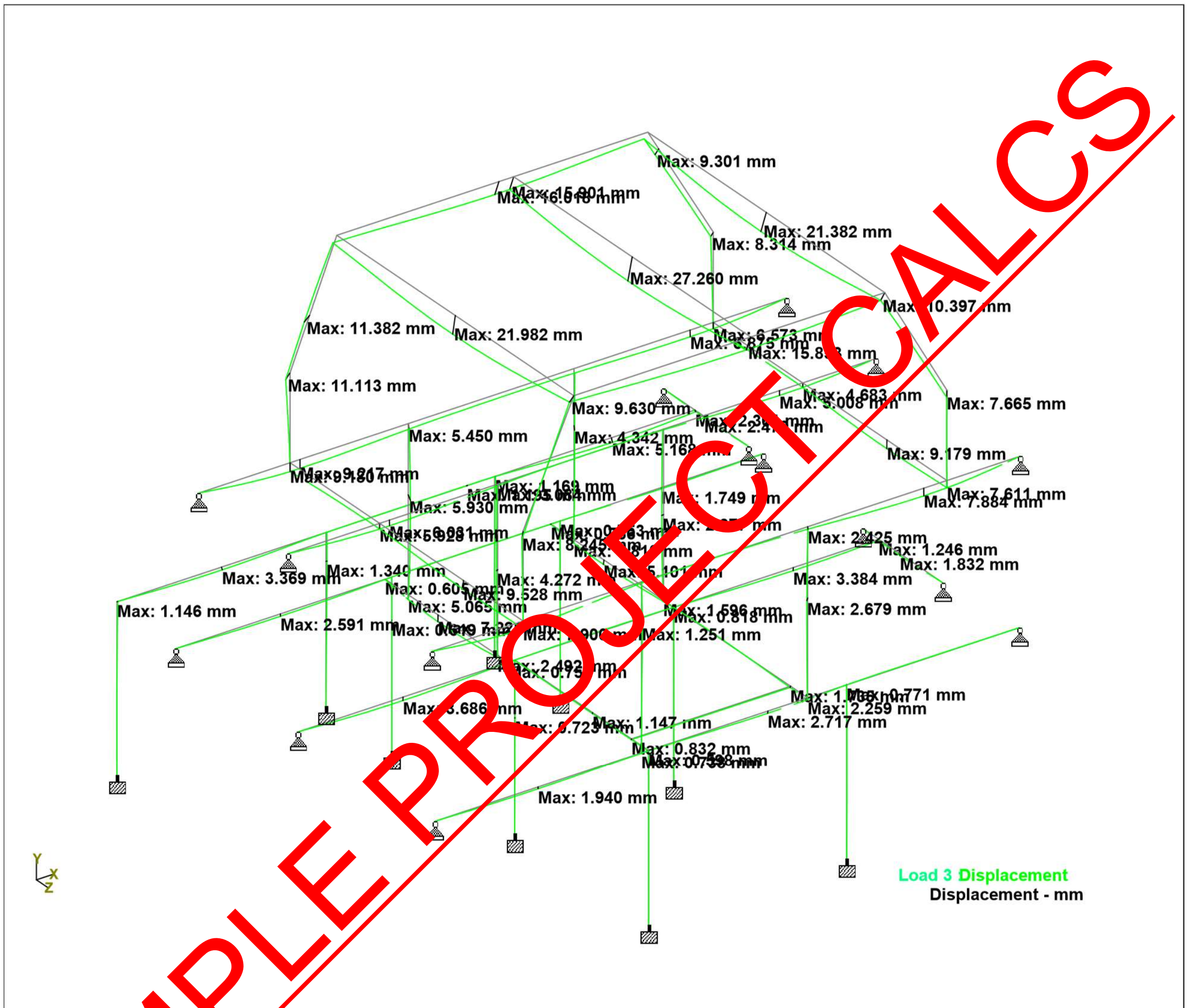

Whole Structure Displacements 70mm:1m 3 UNFACTORED

Beam End Force Summary

The signs of the forces at end B of each beam have been reversed. For example: this means that the Min Fx entry gives the largest tension value for an beam.

				Axial	Shear		Torsion	Bending	
	Beam	Node	L/C	Fx (kN)	Fy (kN)	Fz (kN)	Mx (kN·m)	My (kN·m)	Mz (kN·m)
Max Fx	2	6	4:FACTORED	214.097	0.114	0.312	-0.039	0.150	-0.100
Min Fx	65	48	4:FACTORED	-17.112	17.654	0.124	-0.017	-2.269	27.306
Max Fy	51	52	4:FACTORED	41.509	99.263	0.019	-0.000	0.000	-0.000
Min Fy	7	1	4:FACTORED	2.092	-164.689	0.023	0.126	-0.201	39.062

Max Fz	75	67	4:FACTORED	102.395	-10.682	14.732	-0.336	1.198	9.541
Min Fz	79	68	4:FACTORED	100.441	-3.198	-12.672	0.264	-0.697	16.432
Max Mx	25	22	4:FACTORED	1.186	-104.422	-0.508	1.462	-0.254	15.327
Min Mx	17	17	4:FACTORED	2.564	-123.411	0.764	-1.287	-0.564	19.958
Max My	75	69	4:FACTORED	100.941	-11.452	14.732	-0.336	30.703	31.707
Min My	79	73	4:FACTORED	98.987	-4.154	-12.672	0.264	-27.538	24.219
Max Mz	52	45	4:FACTORED	-13.564	-90.577	-0.099	-0.020	-0.115	64.386
Min Mz	51	53	4:FACTORED	41.509	63.592	0.019	-0.000	0.032	-138.752

Beam Force Detail Summary

Sign convention as diagrams:- positive above line, negative below line except Fx where positive is compression. Distance d is given from beam end A.

				Axial	Shear		Torsion	Bending	
	Beam	L/C	d (m)	Fx (kN)	Fy (kN)	Fz (kN)	Mx (kNm)	My (kNm)	Mz (kNm)
Max Fx	2	4:FACTORED	2.600	214.097	0.11[illegible]	0.312	-0.039	0.150	-0.100
Min Fx	65	4:FACTORED	0	-17.112	17.[illegible]54	0.124	-0.017	-2.269	27.306
Max Fy	51	4:FACTORED	0	41.50[illegible]	99.26[illegible]	0.019	-0.000	0.000	-0.000
Min Fy	7	4:FACTORED	0.133	2.09[illegible]	-164.689	0.023	0.126	-0.201	39.062
Max Fz	75	4:FACTORED	0	102.395	-10.682	14.732	-0.336	1.198	9.541
Min Fz	79	4:FACTORED	0	100.441	-3.198	-12.672	0.264	-0.697	16.432
Max Mx	25	4:FACTORED	0	1.186	-104.422	-0.508	1.462	-0.254	15.327
Min Mx	17	4:FACTORED	0	2.564	-123.411	0.764	-1.287	-0.564	19.958
Max My	75	4:FACTORED	2.003	100.941	-11.452	14.732	-0.336	30.703	31.707
Min My	79	4:FACTORED	2.218	98.987	-4.154	-12.672	0.264	-27.538	24.219
Max Mz	52	4:FACTORED	2.208	-13.564	-90.577	-0.099	-0.020	-0.115	64.386
Min Mz	51	4:FACTORED	1.704	41.509	63.592	0.019	-0.000	0.032	-138.752

PEPP PEARL ENGINEERS, PLANNERS & PROJECT MANAGERS 02 TOWERFIELDS WESTERHAM ROAD BROMLEY, BR2 6HF Email: info@Pearlepp.co.uk Website: www. pearlepp.co.uk Tel no. 02035763199	**Project:** 68 GROVE PARK RD UK		**Sheet No./Rev.** 46
	Job Ref. 2024-06-	**Structural Engineer** **MM**	**Date** **11/06/2024**

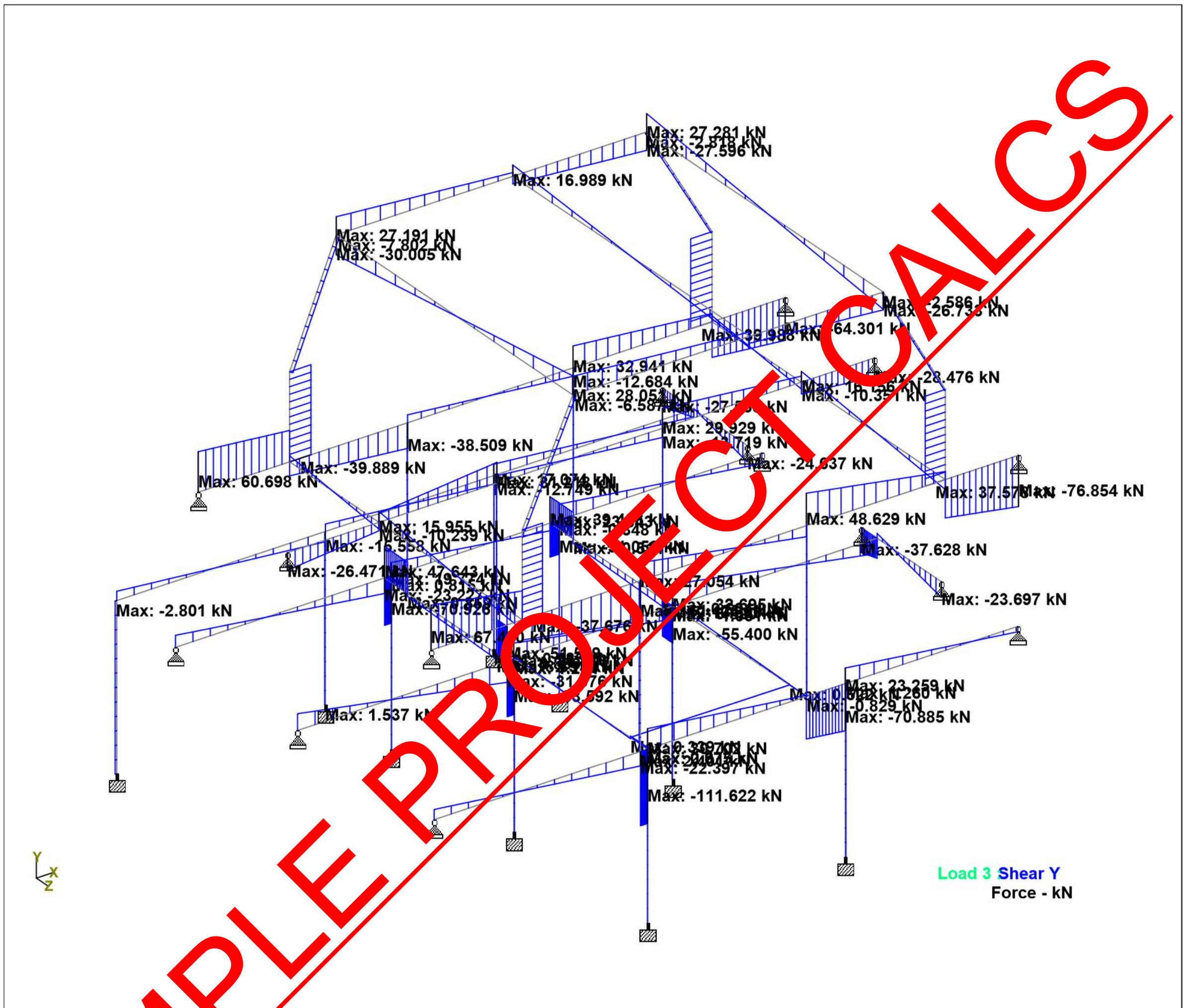

Whole Structure Fy 100kN:1m 3 UNFACTORED

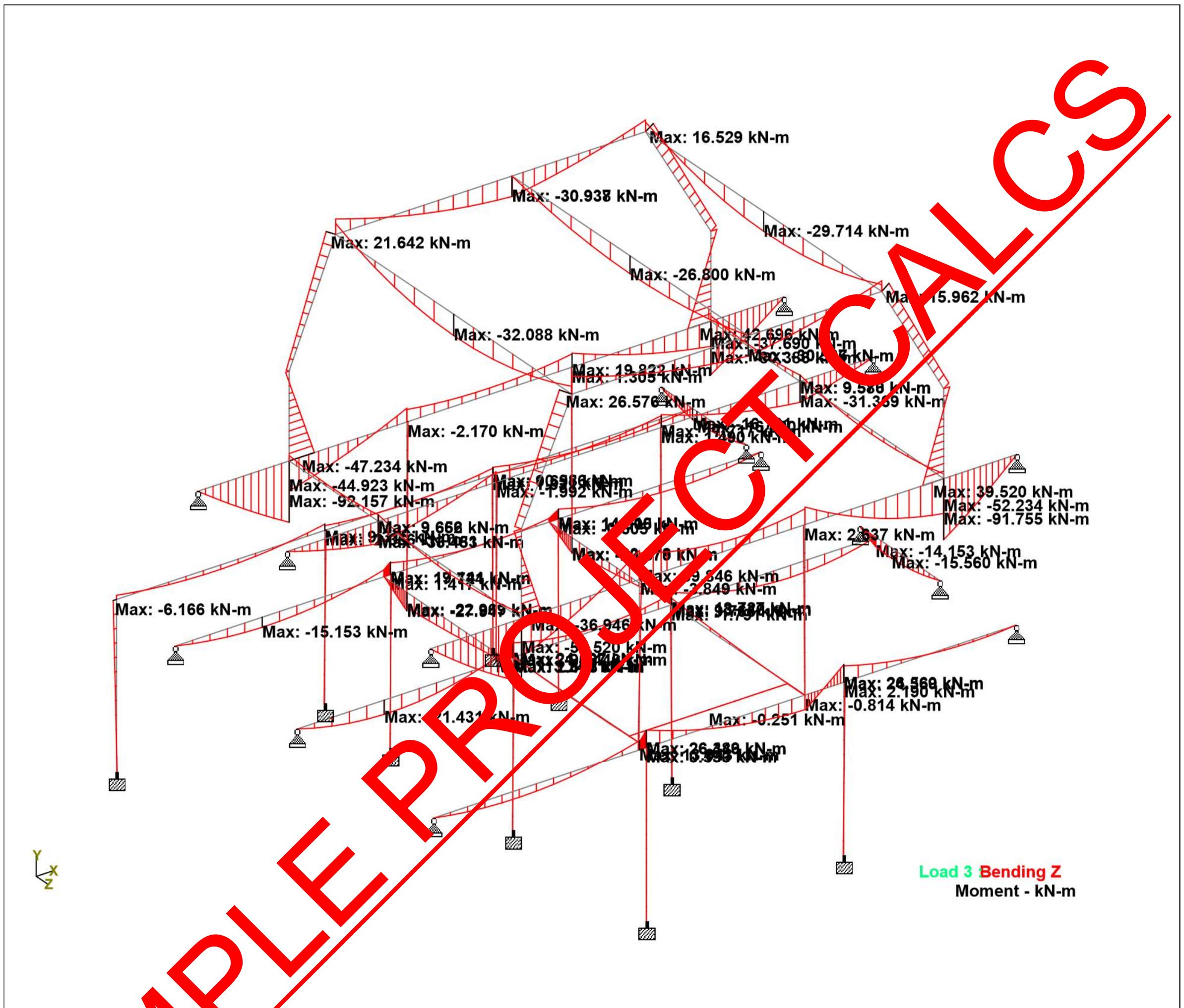

Whole Structure Mz 10 kN-m:1m 3 UNFACTORED

Whole Structure Loads 0.1kN:1m 3 UNFACTORED

Beam Combined Axial and Bending Stresses Summary

			Max Comp			Max Tens		
Beam	L/C	Length (m)	Stress (N/mm^2)	d (m)	Corner	Stress (N/mm^2)	d (m)	Corner
1	1:DL	3.856	19.911	3.856	3	-20.124	3.856	1
	2:LL	3.856	11.533	3.856	3	-11.654	3.856	1
	3:UNFACTORE	3.856	31.445	3.856	3	-31.778	3.856	1

	4:FACTORED	3.856	46.329	3.856	3	-46.819	3.856	1
2	1:DL	2.600	33.847	0	1			
	2:LL	2.600	17.416	0	1			
	3:UNFACTORE	2.600	48.196	0	1			
	4:FACTORED	2.600	70.345	0	1			
3	1:DL	2.967	38.105	0	3	-37.737	0	1
	2:LL	2.967	22.940	0	3	-22.731	0	1
	3:UNFACTORE	2.967	61.046	0	3	-60.468	0	1
	4:FACTORED	2.967	90.052	0	3	-89.20[illegible]	0	1
4	1:DL	0.727	38.599	0.727	3	-38.460	0.727	1
	2:LL	0.727	23.215	0.727	3	-23.129	0.727	1
	3:UNFACTORE	0.727	61.814	0.727	3	-61.589	0.727	1
	4:FACTORED	0.727	91.183	0.727	3	-90.851	0.727	1
5	1:DL	2.600	3[illegible].8[illegible]4	0	1			
	2:LL	2.600	19.183	0	1			
	3:UNFACTORE	2.600	51.077	0	1			
	4:FACTORED	2.600	75.345	0	1			
6	1:DL	3.223	35.480	0	3	-35.609	0	1

			Max Comp			Max Tens		
Beam	L/C	Length (m)	Stress (N/mm^2)	d (m)	Corner	Stress (N/mm^2)	d (m)	Corner
	2:LL	3.223	21.358	0	3	-21.433	0	1
	3:UNFACTORE	3.223	56.838	0	3	-57.042	0	1
	4:FACTORED	3.223	83.845	0	3	-84.146	0	1
7	1:DL	0.133	37.556	0.133	3	-37.237	0.133	1

	2:LL	0.133	22.464	0.133	3	-22.298	0.133	1
	3:UNFACTORE	0.133	60.020	0.133	3	-59.534	0.133	1
	4:FACTORED	0.133	88.520	0.133	3	-87.807	0.133	1
8	1:DL	0.458	6.294	0	3	-5.964	0	1
	2:LL	0.458	2.226	0	2	-2.216	0	1
	3:UNFACTORE	0.458	6.989	0	3	-6.649	0	1
	4:FACTORED	0.458	9.923	0	2	-9.446	0	1
9	1:DL	2.967	1.759	0.742	1	-1.855	0.742	3
	2:LL	2.967	0.967	0	1	-1.049	0	2
	3:UNFACTORE	2.967	2.309	0.495	[illegible]	-2.486	0.495	3
	4:FACTORED	2.967	3.378	0	1	-3.642	0	2
10	1:DL	0.458	3.498	0	1	-3.628	0	3
	2:LL	0.458	4.045	0.458	2	-4.080	0.458	4
	3:UNFACTORE	0.458	[illegible]	0.458	2	-7.144	0.458	4
	4:FACTORED	0.458	10.580	0.458	2	-10.818	0.458	4
11	1:DL	3.109	[illegible]	2.073	1	-9.469	2.073	3
	2:LL	3.109	3.011	0	3	-2.978	0	1
	3:UNFACTORE	3.109	12.837	0	3	-12.443	0	1
	4:FACTORED	3.109	18.574	0	3	-18.016	0	1
12	1:DL	3.109	41.267	0	3	-41.429	0	1
	2:LL	3.109	19.299	0	3	-19.357	0	1
	3:UNFACTORE	3.109	60.566	0	3	-60.786	0	1
	4:FACTORED	3.109	88.653	0	3	-88.972	0	1
13	1:DL	3.820	29.714	0	3	-29.577	0	1
	2:LL	3.820	16.506	0	3	-16.398	0	1
	3:UNFACTORE	3.820	46.220	0	3	-45.975	0	1

	4:FACTORED	3.820	68.009	0	3	-67.644	0	1
14	1:DL	1.713	60.808	0.428	1	-60.830	0.428	3
	2:LL	1.713	18.402	0	1	-18.419	0	3
	3:UNFACTORE	1.713	77.403	0.428	1	-77.441	0.428	3
	4:FACTORED	1.713	111.683	0.428	1	-111.740	0.428	3
15	1:DL	0.418	56.947	0	1	-56.859	0	3
	2:LL	0.418	21.638	0	1	-21.569	0	3
	3:UNFACTORE	0.418	78.585	0	1	-78.428	0	3
	4:FACTORED	0.418	114.346	0	1	-114.1[illegible]3	0	3
16	1:DL	3.916	30.516	1.632	1	-30.386	1.632	3
	2:LL	3.916	17.353	1.632	1	-17.236	1.632	3
	3:UNFACTORE	3.916	47.869	1.632	1	-47.622	1.632	3
	4:FACTORED	3.916	70.487	1.632	1	-70.119	1.632	3
17	1:DL	0.126	3[illegible].242	0.126	4	-34.905	0.126	2
	2:LL	0.126	20.[illegible]2	0.126	4	-20.451	0.126	2
	3:UNFACTORE	0.126	55.944	0.126	4	-55.356	0.126	2
	4:FACTORED	0.126	82.462	0.126	4	-81.589	0.126	2
18	1:DL	0.274	35.898	0.274	1	-35.731	0.274	3
	2:LL	0.274	24.812	0.274	1	-24.704	0.274	3
	3:UNFACTORE	0.274	60.710	0.274	1	-60.436	0.274	3
	4:FACTORED	0.274	89.957	0.274	1	-89.551	0.274	3
19	1:DL	2.967	32.634	0	3	-32.587	0	1
	2:LL	2.967	19.320	0	3	-19.240	0	1
	3:UNFACTORE	2.967	51.954	0	3	-51.827	0	1
	4:FACTORED	2.967	76.599	0	3	-76.406	0	1
20	1:DL	0.614	81.756	0.614	1	-81.656	0.614	3

			Max Comp			Max Tens		
	2:LL	0.614	49.398	0.614	1	-49.344	0.614	3
Beam	L/C	Length (m)	Stress (N/mm^2)	d (m)	Corner	Stress (N/mm^2)	d (m)	Corner
	3:UNFACTORE	0.614	131.154	0.614	1	-131.000	0.614	3
	4:FACTORED	0.614	193.496	0.614	1	-193.269	0.614	3
21	1:DL	2.384	66.022	0	1	-66.561	0	3
	2:LL	2.384	40.275	0	1	-40.393	0	3
	3:UNFACTORE	2.384	106.298	0	1	-107.1[illegible]4	0	3
	4:FACTORED	2.384	156.872	0	1	-158.134	0	3
22	1:DL	0.614	66.626	0.614	1	-66.372	0.614	3
	2:LL	0.614	41.843	0.614	1	-41.661	0.614	3
	3:UNFACTORE	0.614	108.46[illegible]	0.614	1	-108.033	0.614	3
	4:FACTORED	0.614	160.2[illegible]5	0.614	1	-159.578	0.614	3
23	1:DL	2.384	56.463	0	1	-56.609	0	3
	2:LL	2.384	3[illegible].699	0	1	-35.760	0	3
	3:UNFACTORE	2.384	92.162	0	1	-92.369	0	3
	4:FACTORED	2.384	136.166	0	1	-136.469	0	3
24	1:DL	0.274	39.399	0.274	3	-39.176	0.274	1
	2:LL	0.274	20.772	0.274	3	-20.574	0.274	1
	3:UNFACTORE	0.274	60.171	0.274	3	-59.750	0.274	1
	4:FACTORED	0.274	88.394	0.274	3	-87.765	0.274	1
25	1:DL	0.123	28.075	0.123	4	-27.894	0.123	2
	2:LL	0.123	16.010	0.123	4	-15.915	0.123	2
	3:UNFACTORE	0.123	44.085	0.123	4	-43.810	0.123	2
	4:FACTORED	0.123	64.921	0.123	4	-64.516	0.123	2

26	1:DL	2.970	26.101	0	3	-26.099	0	1
	2:LL	2.970	14.933	0	3	-14.937	0	1
	3:UNFACTORE	2.970	41.033	0	3	-41.036	0	1
	4:FACTORED	2.970	60.433	0	3	-60.438	0	1
27	1:DL	0.174	21.577	0.174	3	-21.685	0.174	1
	2:LL	0.174	12.567	0.174	3	-12.627	0.174	1
	3:UNFACTORE	0.174	34.144	0.174	3	-34.312	0.174	1
	4:FACTORED	0.174	50.315	0.174	3	-50.5[illegible]2	0.174	1
28	1:DL	3.905	22.037	1.627	1	-22.011	1.627	3
	2:LL	3.905	12.206	1.627	1	[illegible]	1.627	3
	3:UNFACTORE	3.905	34.243	1.627	1	-34.194	1.627	3
	4:FACTORED	3.905	50.382	1.627	1	-50.309	1.627	3
29	1:DL	3.781	22.540	0	3	-22.570	0	1
	2:LL	3.781	13.061	0	3	-13.081	0	1
	3:UNFACTORE	3.781	35.[illegible]1	0	3	-35.651	0	1
	4:FACTORED	3.781	52.454	0	3	-52.528	0	1
30	1:DL	3.900	30.280	3.900	3	-29.278	3.900	1
	2:LL	3.900	27.712	3.900	3	-26.796	3.900	1
	3:UNFACTORE	3.900	57.992	3.900	3	-56.074	3.900	1
	4:FACTORED	3.900	86.732	3.900	3	-83.862	3.900	1
31	1:DL	3.144	31.969	3.144	3	-31.528	3.144	1
	2:LL	3.144	27.516	3.144	3	-27.091	3.144	1
	3:UNFACTORE	3.144	59.485	3.144	3	-58.620	3.144	1
	4:FACTORED	3.144	88.783	3.144	3	-87.486	3.144	1
32	1:DL	3.737	36.663	0	3	-35.989	0	1
	2:LL	3.737	31.068	0	3	-30.475	0	1

	3:UNFACTORE	3.737	67.731	0	3	-66.464	0	1
	4:FACTORED	3.737	101.037	0	3	-99.145	0	1
33	1:DL	0.842	78.877	0	1	-78.863	0	3
	2:LL	0.842	35.360	0	1	-35.347	0	3
	3:UNFACTORE	0.842	114.237	0	1	-114.210	0	3
	4:FACTORED	0.842	167.003	0	1	-166.964	0	3
34	1:DL	1.430	75.176	0	1	-75.185	0	3
	2:LL	1.430	32.099	0	1	-32.1[illegible]6	0	3
	3:UNFACTORE	1.430	107.275	0	1	-107.2[illegible]1	0	3

			Max Comp			Max Tens		
Beam	L/C	Length (m)	Stress (N/mm^2)	d (m)	Corner	Stress (N/mm^2)	d (m)	Corner
	4:FACTORED	1.430	156.60[illegible]	0	1	-156.629	0	3
35	1:DL	2.600	[illegible].459	0	1	-12.641	0	3
	2:LL	2.600	14.9[illegible]7	0	1	-11.484	0	3
	3:UNFACTORE	2.600	3[illegible].406	0	1	-24.125	0	3
	4:FACTORED	2.600	46.958	0	1	-36.072	0	3
39	1:DL	2.600	42.771	0	2	-3.199	0	1
	2:LL	2.600	20.674	0	1			
	3:UNFACTORE	2.600	63.009	0	1			
	4:FACTORED	2.600	92.260	0	1			
40	1:DL	2.600	54.172	0	1	-13.015	0	3
	2:LL	2.600	33.984	0	1	-9.921	0	3
	3:UNFACTORE	2.600	88.157	0	1	-22.936	0	3
	4:FACTORED	2.600	130.216	0	1	-34.095	0	3
41	1:DL	2.600	33.267	0	2	-0.273	0	1

	2:LL	2.600	19.112	0	2	-0.129	0	1
	3:UNFACTORE	2.600	52.379	0	2	-0.402	0	1
	4:FACTORED	2.600	77.153	0	2	-0.588	0	1
42	1:DL	2.600	21.682	0	1			
	2:LL	2.600	12.592	0	1			
	3:UNFACTORE	2.600	34.274	0	1			
	4:FACTORED	2.600	50.502	0	1			
43	1:DL	2.560	42.884	2.560	1	-11.564	2.560	3
	2:LL	2.560	24.286	2.560	1	-4.902	2.560	3
	3:UNFACTORE	2.560	67.170	2.560	1	-16.466	2.560	3
	4:FACTORED	2.560	98.895	2.560	1	-24.032	2.560	3
44	1:DL	2.560	30.149	2.560	3	-7.429	2.560	1
	2:LL	2.560	17.222	2.560	3	-2.499	2.560	1
	3:UNFACTORE	2.560	47.37[illegible]	2.560	3	-9.928	2.560	1
	4:FACTORED	2.560	69.764	2.560	3	-14.400	2.560	1
45	1:DL	2.560	44.905	0	2	-30.835	0	1
	2:LL	2.560	28.155	0	2	-17.533	0	1
	3:UNFACTORE	2.560	73.059	0	2	-48.368	0	1
	4:FACTORED	2.560	107.914	0	2	-71.221	0	1
46	1:DL	2.560	27.316	0	2	-12.803	0	1
	2:LL	2.560	19.434	0	2	-8.540	0	1
	3:UNFACTORE	2.560	46.749	0	2	-21.343	0	1
	4:FACTORED	2.560	69.336	0	2	-31.588	0	1
47	1:DL	2.560	43.224	0	1	-25.443	0	2
	2:LL	2.560	25.579	0	1	-14.117	0	2

	3:UNFACTORE	2.560	68.803	0	1	-39.560	0	2
	4:FACTORED	2.560	101.440	0	1	-58.207	0	2
48	1:DL	2.560	29.632	0	1	-13.646	0	2
	2:LL	2.560	18.397	0	1	-7.844	0	2
	3:UNFACTORE	2.560	48.029	0	1	-21.489	0	2
	4:FACTORED	2.560	70.919	0	1	-31.654	0	2
49	1:DL	2.600	17.568	2.600	1	-9.615	2.600	3
	2:LL	2.600	15.552	2.600	1	-8.266	2.600	3
	3:UNFACTORE	2.600	33.119	2.600	1	-17.881	2.600	3
	4:FACTORED	2.600	49.477	2.600	1	-26.686	2.600	3
50	1:DL	2.600	12.712	2.600	3	-3.696	2.600	1
	2:LL	2.600	10.246	2.600	3	-2.172	2.600	1
	3:UNFACTORE	2.600	22.958	2.600	3	-5.868	2.600	1
	4:FACTORED	2.600	3[illegible].190	[illegible].600	3	-8.650	2.600	1
51	1:DL	1.704	108.426	1.704	1	-103.471	1.704	3
	2:LL	1.704	57.469	1.704	1	-55.013	1.704	3
	3:UNFACTORE	1.704	165.502	1.704	1	-158.092	1.704	3
	4:FACTORED	1.704	243.197	1.704	1	-232.331	1.704	3

			Max Comp			Max Tens		
Beam	L/C	Length (m)	Stress (N/mm^2)	d (m)	Corner	Stress (N/mm^2)	d (m)	Corner
52	1:DL	2.208	63.014	0	1	-64.646	0	3
	2:LL	2.208	34.630	0	1	-35.421	0	3
	3:UNFACTORE	2.208	97.606	0	1	-100.029	0	3
	4:FACTORED	2.208	143.574	0	1	-147.125	0	3
53	1:DL	3.100	42.045	0	3	-44.085	0	1

02 TOWERFIELDS WESTERHAM ROAD
BROMLEY, BR2 6HF
Email: info@Pearlepp.co.uk
Website: www. pearlepp.co.uk
Tel no. 02035763199

	2:LL	3.100	24.818	0	3	-25.830	0	1
	3:UNFACTORE	3.100	66.863	0	3	-69.915	0	1
	4:FACTORED	3.100	98.572	0	3	-103.047	0	1
54	1:DL	2.597	57.177	2.597	1	-59.070	2.597	3
	2:LL	2.597	31.566	2.597	1	-32.508	2.597	3
	3:UNFACTORE	2.597	88.743	2.597	1	-91.578	2.597	3
	4:FACTORED	2.597	130.554	2.597	1	-134.711	2.597	3
55	1:DL	1.365	104.924	0	1	-100.235	0	3
	2:LL	1.365	56.263	0	1	-53.959	0	3
	3:UNFACTORE	1.365	160.929	0	1	-153.936	0	3
	4:FACTORED	1.365	236.553	0	1	-226.302	0	3
56	1:DL	2.203	56.087	2.203	2	-56.031	2.203	4
	2:LL	2.203	36.129	2.203	2	-36.094	2.203	4
	3:UNFACTORE	2.203	92.215	2.203	2	-92.125	2.203	4
	4:FACTORED	2.203	136.327	2.203	2	-136.194	2.203	4
57	1:DL	1.709	54.223	0	1	-54.134	0	3
	2:LL	1.709	35.042	0	1	-34.990	0	3
	3:UNFACTORE	1.709	89.265	0	1	-89.124	0	3
	4:FACTORED	1.709	131.980	0	1	-131.772	0	3
58	1:DL	3.841	40.449	0	3	-43.260	0	1
	2:LL	3.841	21.290	0	3	-22.871	0	1
	3:UNFACTORE	3.841	61.739	0	3	-66.131	0	1
	4:FACTORED	3.841	90.692	0	3	-97.158	0	1
59	1:DL	3.093	27.182	3.093	3	-27.294	3.093	1
	2:LL	3.093	19.406	3.093	3	-19.479	3.093	1
	3:UNFACTORE	3.093	46.587	3.093	3	-46.773	3.093	1

	4:FACTORED	3.093	69.103	3.093	3	-69.378	3.093	1
60	1:DL	2.597	50.975	2.597	1	-50.965	2.597	3
	2:LL	2.597	33.619	2.597	1	-33.608	2.597	3
	3:UNFACTORE	2.597	84.593	2.597	1	-84.573	2.597	3
	4:FACTORED	2.597	125.154	2.597	1	-125.124	2.597	3
61	1:DL	1.365	50.078	0	1	-50.043	0	3
	2:LL	1.365	33.168	0	1	-33.143	0	3
	3:UNFACTORE	1.365	83.246	0	1	-83.1[illegible]6	0	3
	4:FACTORED	1.365	123.178	0	1	-123.0[illegible]0	0	3
62	1:DL	3.841	38.567	0	[illegible]	-41.057	0	1
	2:LL	3.841	20.430	0	3	-21.881	0	1
	3:UNFACTORE	3.841	58.997	0	3	-62.938	0	1
	4:FACTORED	3.841	86.682	0	3	-92.489	0	1
63	1:DL	1.709	113.15[illegible]	1.709	2	-108.075	1.709	4
	2:LL	1.709	59.[illegible]2	1.709	2	-57.345	1.709	4
	3:UNFACTORE	1.70[illegible]	173.023	1.709	2	-165.421	1.709	4
	4:FACTORED	1.709	254.206	1.709	2	-243.058	1.709	4
64	1:DL	2.203	56.706	0	1	-58.596	0	3
	2:LL	2.203	30.773	0	1	-31.713	0	3
	3:UNFACTORE	2.203	87.479	0	1	-90.309	0	3
	4:FACTORED	2.203	128.625	0	1	-132.775	0	3
65	1:DL	3.093	24.209	3.093	4	-26.248	3.093	2
	2:LL	3.093	14.591	3.093	4	-15.607	3.093	2
	3:UNFACTORE	3.093	38.800	3.093	4	-41.854	3.093	2
	4:FACTORED	3.093	57.238	3.093	4	-61.717	3.093	2
66	1:DL	2.597	47.625	2.597	2	-49.574	2.597	4

			Max Comp			Max Tens		
Beam	L/C	Length (m)	Stress (N/mm^2)	d (m)	Corner	Stress (N/mm^2)	d (m)	Corner
	2:LL	2.597	25.587	2.597	2	-26.557	2.597	4
	3:UNFACTORE	2.597	73.212	2.597	2	-76.132	2.597	4
	4:FACTORED	2.597	107.614	2.597	2	-111.896	2.597	4
67	1:DL	1.365	98.554	0	1	-93.528	0	3
	2:LL	1.365	52.214	0	1	-49.714	0	3
	3:UNFACTORE	1.365	150.769	0	1	-143.242	0	3
	4:FACTORED	1.365	221.519	0	1	-210.481	0	3
68	1:DL	2.384	38.316	2.384	3	-39.637	2.384	1
	2:LL	2.384	20.461	2.384	3	-21.124	2.384	1
	3:UNFACTORE	2.384	58.777	2.384	3	-60.761	2.384	1
	4:FACTORED	2.384	86.380	2.384	3	-89.290	2.384	1
69	1:DL	2.384	40.[illegible]	2.384	3	-41.649	2.384	1
	2:LL	2.384	21.354	2.384	4	-22.059	2.384	2
	3:UNFACTORE	2.384	61.597	2.384	4	-63.709	2.384	2
	4:FACTORED	2.384	90.507	2.384	4	-93.604	2.384	2
70	1:DL	1.350	72.897	0	1	-62.460	0	3
	2:LL	1.350	37.963	0	1	-33.072	0	3
	3:UNFACTORE	1.350	110.860	0	1	-95.532	0	3
	4:FACTORED	1.350	162.796	0	1	-140.359	0	3
71	1:DL	2.006	79.755	2.006	4	-67.892	2.006	2
	2:LL	2.006	40.951	2.006	4	-35.102	2.006	2
	3:UNFACTORE	2.006	120.706	2.006	4	-102.994	2.006	2
	4:FACTORED	2.006	177.178	2.006	4	-151.212	2.006	2
72	1:DL	1.350	85.372	0	1	-74.824	0	3

	2:LL	1.350	44.515	0	1	-39.576	0	3
	3:UNFACTORE	1.350	129.888	0	1	-114.400	0	3
	4:FACTORED	1.350	190.746	0	1	-168.075	0	3
73	1:DL	1.350	72.429	0	3	-62.640	0	1
	2:LL	1.350	38.105	0	3	-33.586	0	1
	3:UNFACTORE	1.350	110.534	0	3	-96.226	0	1
	4:FACTORED	1.350	162.369	0	3	-141.434	0	1
74	1:DL	1.350	78.790	0	3	-68.614	0	1
	2:LL	1.350	41.270	0	3	-36.548	0	1
	3:UNFACTORE	1.350	120.060	0	3	-105.162	0	1
	4:FACTORED	1.350	176.338	0	3	-154.536	0	1
75	1:DL	2.003	99.730	2.003	3	-87.663	2.003	1
	2:LL	2.003	50.782	2.003	3	-44.826	2.003	1
	3:UNFACTORE	2.003	150.512	2.003	3	-132.488	2.003	1
	4:FACTORED	2.003	220.[illegible]73	2.003	3	-194.449	2.003	1
76	1:DL	3.300	53.758	0	3	-46.848	0	1
	2:LL	3.300	27.059	0	2	-23.620	0	1
	3:UNFACTORE	3.300	80.817	0	2	-70.468	0	1
	4:FACTORED	3.300	118.556	0	2	-103.379	0	1
77	1:DL	2.500	49.267	2.500	3	-42.349	2.500	1
	2:LL	2.500	24.954	2.500	3	-21.509	2.500	1
	3:UNFACTORE	2.500	74.221	2.500	3	-63.858	2.500	1
	4:FACTORED	2.500	108.901	2.500	3	-93.704	2.500	1
78	1:DL	6.314	39.625	3.157	1	-41.228	3.157	3
	2:LL	6.314	18.903	3.157	1	-19.747	3.157	3
	3:UNFACTORE	6.314	58.528	3.157	1	-60.976	3.157	3

PEPP
PEARL ENGINEERS, PLANNERS & PROJECT MANAGERS

02 TOWERFIELDS WESTERHAM ROAD
BROMLEY, BR2 6HF
Email: info@Pearlepp.co.uk
Website: www. pearlepp.co.uk
Tel no. 02035763199

	4:FACTORED	6.314	85.720	3.157	1	-89.316	3.157	3
79	1:DL	2.118	86.613	2.118	4	-74.767	2.118	2
	2:LL	2.118	44.206	2.118	4	-38.375	2.118	2
	3:UNFACTORE	2.118	130.819	2.118	4	-113.143	2.118	2
	4:FACTORED	2.118	191.988	2.118	4	-166.075	2.118	2
80	1:DL	2.116	63.272	2.116	3	-51.918	2.116	1
	2:LL	2.116	32.280	2.116	3	-26.721	2.116	1
			Max Comp			Max Tens		
Beam	L/C	Length (m)	Stress (N/mm^2)	d (m)	Corner	Stress (N/mm^2)	d (m)	Corner
	3:UNFACTORE	2.116	95.552	2.116	3	-78.638	2.116	1
	4:FACTORED	2.116	140.229	2.116	3	-115.438	2.116	1
81	1:DL	3.300	53.290	0	3	-46.622	0	1
	2:LL	3.300	26.872	0	3	-23.583	0	1
	3:UNFACTORE	3.300	80.162	0	3	-70.206	0	1
	4:FACTORED	3.300	117.601	0	3	-103.005	0	1
82	1:DL	2.500	51.846	0	1	-45.187	0	3
	2:LL	2.500	25.243	0	1	-21.960	0	3
	3:UNFACTORE	2.500	77.089	0	1	-67.147	0	3
	4:FACTORED	2.500	112.973	0	1	-98.398	0	3
83	1:DL	6.314	54.255	3.157	1	-52.196	3.157	3
	2:LL	6.314	27.235	3.157	1	-26.130	3.157	3
	3:UNFACTORE	6.314	81.490	3.157	1	-78.326	3.157	3
	4:FACTORED	6.314	119.533	3.157	1	-114.882	3.157	3
84	1:DL	6.314	50.134	3.157	1	-47.965	3.157	3
	2:LL	6.314	24.979	3.157	1	-23.825	3.157	3
	3:UNFACTORE	6.314	75.113	3.157	1	-71.790	3.157	3

	4:FACTORED	6.314	110.154	3.157	1	-105.271	3.157	3

Reaction Summary

			Horizontal	Vertical	Horizontal	Moment		
	Node	L/C	FX (kN)	FY (kN)	FZ (kN)	MX (kN·m)	MY (kN·m)	MZ (kN·m)
Max FX	60	4:FACTORED	42.586	89.314	1.969	0	0	0
Min FX	63	4:FACTORED	-42.163	94.586	2.018	0	0	0
Max FY	6	4:FACTORED	-0.114	214.097	-0.312	-0.150	[illegible]	0.100
Min FY	5	2:LL	0.221	2.985	0.057	0	0	0
Max FZ	63	4:FACTORED	-42.163	94.586	2.018	0	0	0
Min FZ	41	4:FACTORED	1.516	168.708	-2.683	-2.019	-0.002	-1.308
Max MX	42	4:FACTORED	-1.199	134.581	0.937	0.930	-0.054	1.034
Min MX	41	4:FACTORED	1.516	168.708	-2.683	-2.019	-0.002	-1.308
Max MY	51	4:FACTORED	0.869	45.544	-0.076	-0.198	0.026	-0.280
Min MY	42	4:FACTORED	-1.199	134.581	0.937	0.930	-0.054	1.034
Max MZ	50	4:FACTORED	-2.296	[illegible]	[illegible]	-0.056	0.01654	2.451
Min MZ	35	4:FACTORED	4.189	[illegible]	[illegible]	0.013	0.000	-1.673

PEPP PEARL ENGINEERS, PLANNERS & PROJECT MANAGERS 02 TOWERFIELDS WESTERHAM ROAD BROMLEY, BR2 6HF Email: info@Pearlepp.co.uk Website: www. pearlepp.co.uk Tel no. 02035763199	**Project:** 68 GROVE PARK RD UK	**Sheet No./Rev.** 63
	Job Ref. 2024-06- / **Structural Engineer** MM	**Date** 11/06/2024

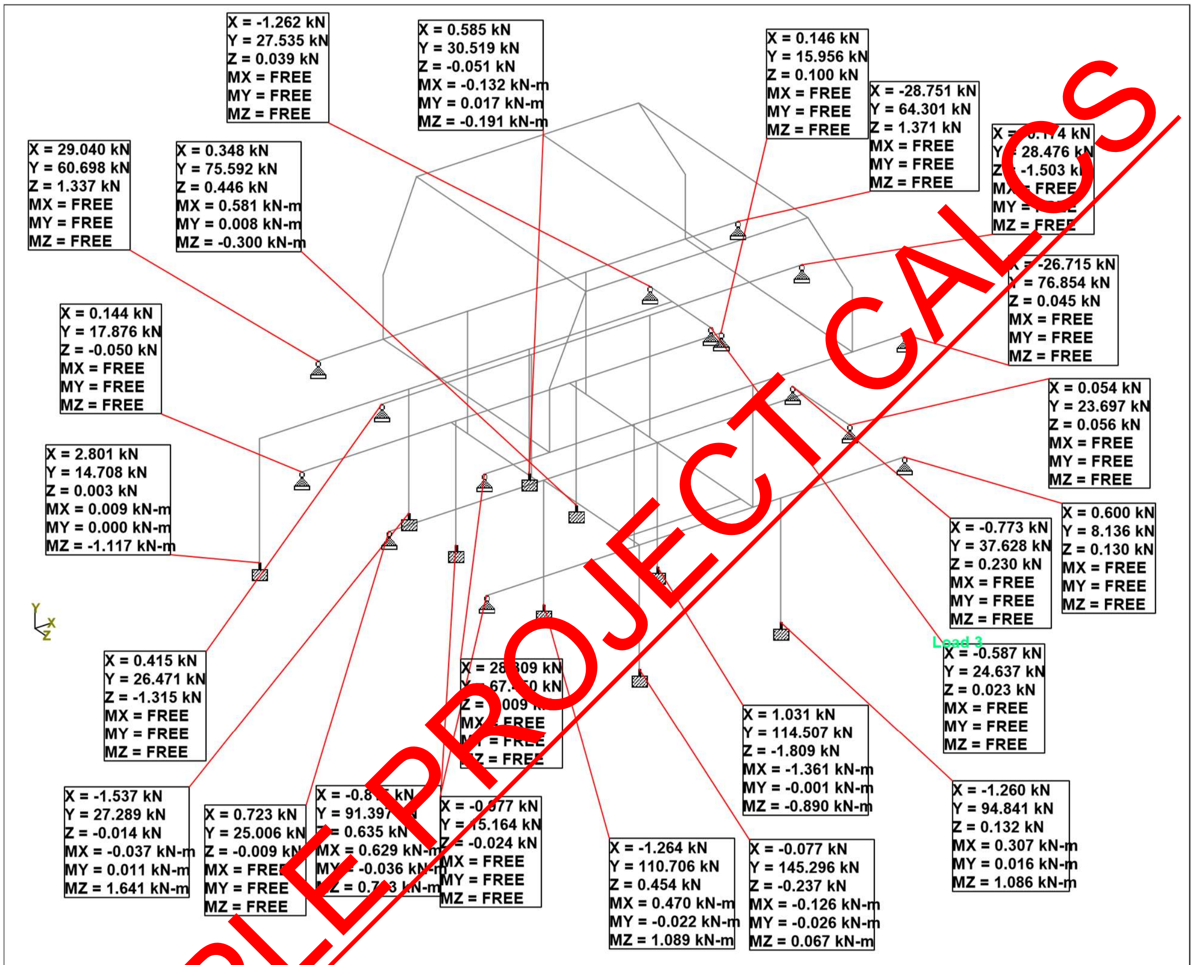

Whole Structure

Utilization Ratio

Beam	Analysis Property	Design Property	Actual Ratio	Allowable Ratio	Ratio (Act./Allow.)	Clause	L/C	Ax (cm^2)	Iz (cm^4)	Iy (cm^4)	Ix (cm^4)
1	UC203X203X	UC203X203X	0.181	1.000	0.181	BS-4.3.6	4	58.700	4.57 E +3	1.55 E +3	22.154
2	100X10SHS	100X10SHS	0.302	1.000	0.302	EC-6.3.3-662	4	34.900	462.000	462.000	761.000
3	UC203X203X	UC203X203X	0.310	1.000	0.310	BS-4.3.6	4	58.700	4.57 E +3	1.55 E +3	22.154
4	UC203X203X	UC203X203X	0.433	1.000	0.433	BS-4.2.3-(Y)	4	58.700	4.57 E +3	1.55 E +3	22.154
5	100X10SHS	100X10SHS	0.277	1.000	0.277	EC-6.3.3-662	4	34.900	462.000	462.000	761.000
6	UC203X203X	UC203X203X	0.295	1.000	0.295	BS-4.3.6	4	58.700	4.57 E +3	1.55 E +3	22.154
7	UC203X203X	UC203X203X	0.682	1.000	0.682	BS-4.2.3-(Y)	4	58.700	4.57 E +3	1.55 E +3	22.154
8	UC152X152X	UC152X152X	0.030	1.000	0.030	BS-4.8.3.3.2	4	29.200	1.25 E +3	400.000	4.635

9	UC152X152X	UC152X152X	0.018	1.000	0.018	BS-4.9	4	29.200	1.25 E +3	400.000	4.635
10	UC152X152X	UC152X152X	0.034	1.000	0.034	BS-4.8.2.2	4	29.200	1.25 E +3	400.000	4.635
11	UC152X152X	UC152X152X	0.074	1.000	0.074	BS-4.8.3.3.2	4	29.200	1.25 E +3	400.000	4.635
12	UC152X152X	UC152X152X	0.387	1.000	0.387	BS-4.9	4	29.200	1.25 E +3	400.000	4.635
13	UC203X203X	UC203X203X	0.242	1.000	0.242	BS-4.3.6	4	58.700	4.57 E +3	1.55 E +3	22.154
14	UB203X102X	UB203X102X	0.439	1.000	0.439	BS-4.3.6	4	29.400	2.1 E +3	164.000	7.019
15	UB203X102X	UB203X102X	0.355	1.000	0.355	ANNEX I.1	4	29.400	2.1 E +3	164.000	7.019
16	UC203X203X	UC203X203X	0.281	1.000	0.281	BS-4.3.6	4	58.700	4.57 E +3	1.55 E +3	22.154
17	UC203X203X	UC203X203X	0.512	1.000	0.512	BS-4.2.3-(Y)	4	58.700	4.57 E +3	1.55 E +3	22.154
18	UC152X152X	UC152X152X	0.452	1.000	0.452	BS-4.2.3-(Y)	4	38.300	1.75 E +3	560.000	10.518
19	UC203X203X	UC203X203X	0.257	1.000	0.257	BS-4.3.6	4	58.700	4.57 E +3	1.55 E +3	22.154
20	UC152X152X	UC152X152X	0.623	1.000	0.623	ANNEX I.1	4	38.300	1.75 E +3	560.000	10.518
21	UC152X152X	UC152X152X	0.552	1.000	0.552	BS-4.3.6	4	38.300	1.75 E +3	560.000	10.518
22	UC152X152X	UC152X152X	0.518	1.000	0.518	ANNEX I.1	4	38.300	1.75 E +3	560.000	10.518
23	UC152X152X	UC152X152X	0.490	1.000	0.490	BS-4.3.6	4	38.300	1.75 E +3	560.000	10.518
24	UC152X152X	UC152X152X	0.485	1.000	0.485	BS-4.2.3-(Y)	4	38.300	1.75 E +3	560.000	10.518

Utilization Ratio Cont...

Beam	Analysis Property	Design Property	Actual Ratio	Allowable Ratio	Ratio (Act./Allow.)	Clause	L/C	Ax (cm^2)	Iz (cm^4)	Iy (cm^4)	Ix (cm^4)
25	UC203X203X	UC203X203X	0.433	1.000	0.433	BS-4.2.3-(Y)	4	58.700	4.57 E +3	1.55 E +3	22.154
26	UC203X203X	UC203X203X	0.208	1.000	0.208	BS-4.9	4	58.700	4.57 E +3	1.55 E +3	22.154
27	UC203X203X	UC203X203X	0.312	1.000	0.312	BS-4.2.3-(Y)	4	58.700	4.57 E +3	1.55 E +3	22.154
28	UC203X203X	UC203X203X	0.198	1.000	0.198	BS-4.3.6	4	58.700	4.57 E +3	1.55 E +3	22.154
29	UC203X203X	UC203X203X	0.192	1.000	0.192	BS-4.3.6	4	58.700	4.57 E +3	1.55 E +3	22.154
30	UC152X152X	UC152X152X	0.437	1.000	0.437	BS-4.8.3.3.2	4	29.200	1.25 E +3	400.000	4.635
31	UC152X152X	UC152X152X	0.391	1.000	0.391	BS-4.8.3.3.2	4	29.200	1.25 E +3	400.000	4.635
32	UC152X152X	UC152X152X	0.510	1.000	0.510	BS-4.8.3.3.2	4	29.200	1.25 E +3	400.000	4.635
33	UB203X102X	UB203X102X	0.498	1.000	0.498	ANNEX I.1	4	29.400	2.1 E +3	164.000	7.019
34	UB203X102X	UB203X102X	0.488	1.000	0.488	BS-4.9	4	29.400	2.1 E +3	164.000	7.019
35	UC152X152X	UC152X152X	0.155	1.000	0.155	BS-4.3.6	4	38.300	1.75 E +3	560.000	10.518
39	100X10SHS	100X10SHS	0.320	1.000	0.320	EC-6.3.3-662	4	34.900	462.000	462.000	761.000
40	100X10SHS	100X10SHS	0.373	1.000	0.373	EC-6.3.3-662	4	34.900	462.000	462.000	761.000
41	100X10SHS	100X10SHS	0.258	1.000	0.258	EC-6.3.3-662	4	34.900	462.000	462.000	761.000
42	100X10SHS	100X10SHS	0.184	1.000	0.184	EC-6.3.3-662	4	34.900	462.000	462.000	761.000
43	100X10SHS	100X10SHS	0.334	1.000	0.334	EC-6.3.3-662	4	34.900	462.000	462.000	761.000
44	100X10SHS	100X10SHS	0.246	1.000	0.246	EC-6.3.3-662	4	34.900	462.000	462.000	761.000
45	100X10SHS	100X10SHS	0.256	1.000	0.256	EC-6.2.9.1	4	34.900	462.000	462.000	761.000
46	100X10SHS	100X10SHS	0.180	1.000	0.180	EC-6.3.3-662	4	34.900	462.000	462.000	761.000
47	100X10SHS	100X10SHS	0.248	1.000	0.248	EC-6.3.3-662	4	34.900	462.000	462.000	761.000
48	100X10SHS	100X10SHS	0.186	1.000	0.186	EC-6.3.3-662	4	34.900	462.000	462.000	761.000

49	100X10SHS	100X10SHS	0.160	1.000	0.160	EC-6.3.3-662	4	34.900	462.000	462.000	761.000
50	100X10SHS	100X10SHS	0.120	1.000	0.120	EC-6.3.3-662	4	34.900	462.000	462.000	761.000
51	UC203X203X	UC203X203X	0.771	1.000	0.771	ANNEX I.1	4	76.400	6.12 E +3	2.06 E +3	47.230
52	UC203X203X	UC203X203X	0.477	1.000	0.477	BS-4.8.2.2	4	76.400	6.12 E +3	2.06 E +3	47.230
53	UC203X203X	UC203X203X	0.351	1.000	0.351	BS-4.3.6	4	76.400	6.12 E +3	2.06 E +3	47.230
54	UC203X203X	UC203X203X	0.437	1.000	0.437	BS-4.3.6	4	76.400	6.12 E +3	2.06 E +3	47.230
55	UC203X203X	UC203X203X	0.749	1.000	0.749	ANNEX I.1	4	76.400	6.12 E +3	2.06 E +3	47.230
56	UC203X203X	UC203X203X	0.426	1.000	0.426	ANNEX I.1	4	58.700	4.57 E +3	1.55 E +3	22.154
57	UC203X203X	UC203X203X	0.415	1.000	0.415	ANNEX I.1	4	58.700	4.57 E +3	1.55 E +3	22.154
58	UC152X152X	UC152X152X	0.447	1.000	0.447	BS-4.9	4	29.200	1.25 E +3	400.000	4.635
59	UC203X203X	UC203X203X	0.233	1.000	0.233	BS-4.9	4	58.700	4.57 E +3	1.55 E +3	22.154
60	UC203X203X	UC203X203X	0.394	1.000	0.394	ANNEX I.1	4	58.700	4.57 E +3	1.55 E +3	22.154
61	UC203X203X	UC203X203X	0.388	1.000	0.388	ANNEX I.1	4	58.700	4.57 E +3	1.55 E +3	22.154
62	UC152X152X	UC152X152X	0.434	1.000	0.434	BS-4.9	4	29.200	1.25 E +3	400.000	4.635
63	UC203X203X	UC203X203X	0.793	1.000	0.793	ANNEX I.1	4	76.400	6.12 E +3	2.06 E +3	47.230
64	UC203X203X	UC203X203X	0.416	1.000	0.416	BS-4.8.2.2	4	76.400	6.12 E +3	2.06 E +3	47.230
65	UC203X203X	UC203X203X	0.193	1.000	0.193	BS-4.8.2.2	4	76.400	6.12 E +3	2.06 E +3	47.230
66	UC203X203X	UC203X203X	0.351	1.000	0.351	BS-4.8.2.2	4	76.400	6.12 E +3	2.06 E +3	47.230
67	UC203X203X	UC203X203X	0.689	1.000	0.689	ANNEX I.1	4	76.400	6.12 E +3	2.06 E +3	47.230
68	UC152X152X	UC152X152X	0.350	1.000	0.350	BS-4.9	4	29.200	1.25 E +3	400.000	4.635
69	UC152X152X	UC152X152X	0.354	1.000	0.354	BS-4.9	4	29.200	1.25 E +3	400.000	4.635
70	UC203X203X	UC203X203X	0.446	1.000	0.446	ANNEX I.1	4	76.400	6.12 E +3	2.06 E +3	47.230
71	UC203X203X	UC203X203X	0.463	1.000	0.463	ANNEX I.1	4	76.400	6.12 E +3	2.06 E +3	47.230
72	UC203X203X	UC203X203X	0.535	1.000	0.535	ANNEX I.1	4	76.400	6.12 E +3	2.06 E +3	47.230
73	UC203X203X	UC203X203X	0.451	1.000	0.451	ANNEX I.1	4	76.400	6.12 E +3	2.06 E +3	47.230
74	UC203X203X	UC203X203X	0.491	1.000	0.491	ANNEX I.1	4	76.400	6.12 E +3	2.06 E +3	47.230
75	UC203X203X	UC203X203X	0.562	1.000	0.562	ANNEX I.1	4	76.400	6.12 E +3	2.06 E +3	47.230
76	UC203X203X	UC203X203X	0.395	1.000	0.395	ANNEX I.1	4	76.400	6.12 E +3	2.06 E +3	47.230
77	UC203X203X	UC203X203X	0.395	1.000	0.395	ANNEX I.1	4	76.400	6.12 E +3	2.06 E +3	47.230
78	UC203X203X	UC203X203X	0.457	1.000	0.457	BS-4.3.6	4	58.700	4.57 E +3	1.55 E +3	22.154
79	UC203X203X	UC203X203X	0.482	1.000	0.482	ANNEX I.1	4	76.400	6.12 E +3	2.06 E +3	47.230
80	UC203X203X	UC203X203X	0.352	1.000	0.352	ANNEX I.1	4	76.400	6.12 E +3	2.06 E +3	47.230
81	UC203X203X	UC203X203X	0.368	1.000	0.368	ANNEX I.1	4	76.400	6.12 E +3	2.06 E +3	47.230
82	UC203X203X	UC203X203X	0.371	1.000	0.371	ANNEX I.1	4	76.400	6.12 E +3	2.06 E +3	47.230
83	UC203X203X	UC203X203X	0.576	1.000	0.576	ANNEX I.1	4	58.700	4.57 E +3	1.55 E +3	22.154
84	UC203X203X	UC203X203X	0.539	1.000	0.539	ANNEX I.1	4	58.700	4.57 E +3	1.55 E +3	22.154

PEPP PEARL ENGINEERS, PLANNERS & PROJECT MANAGERS 02 TOWERFIELDS WESTERHAM ROAD BROMLEY, BR2 6HF Email: info@Pearlepp.co.uk Website: www. pearlepp.co.uk Tel no. 02035763199	**Project:** 68 GROVE PARK RD UK		**Sheet No./Rev.** 66
	Job Ref. 2024-06-	**Structural Engineer** **MM**	**Date** **11/06/2024**

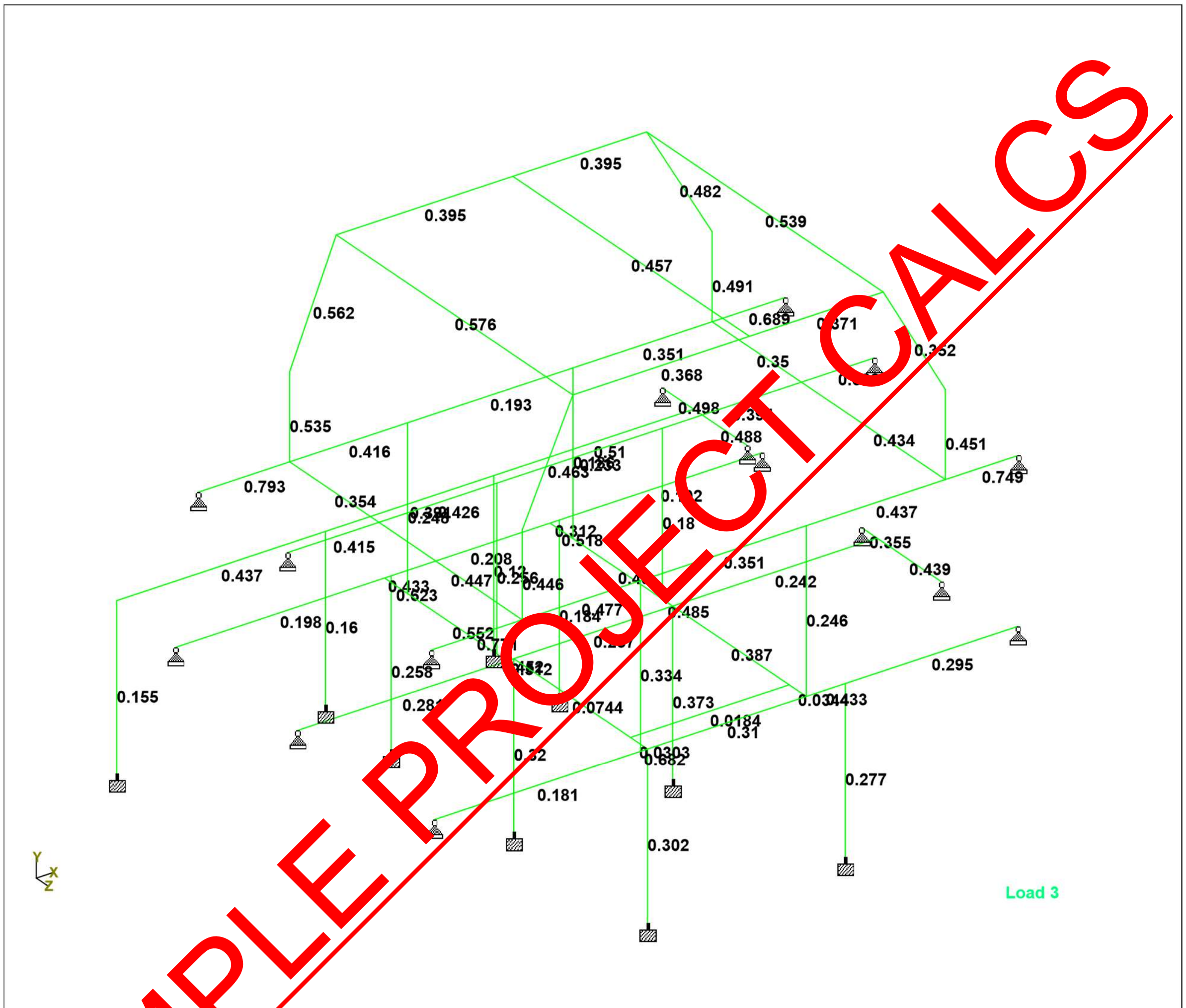

Whole Structure

Steel Beam Assembly 2

- **B-20** UC 254 x 254 x 89 (BS4-1) (S275)
- **C-19, C20** SHS 100 x 100 x 10 (S275)

Beam, B-20:

Section UC 254 X 254 X 89 (BS4-1) (S-355)

We incorporated the following loads in our calculations for Beam B-20.

Self-Weight: Auto incorporated by software using our steel sectional properties.

Factors used are;

Self-Weight = 1.0

Dead Load = 1.4

Live Load = 1.6

We had taken loadings being applied on our beam "B-20".

- Flat Roof Load

Our load derivation for each source for Beam B-20 is as follows;

Flat Roof Load;

Dead Load: 1.1 kN/m^2

Live Lead: 0.6 kN/m^2

Tributary Length = 2.9 m

Dead Load (UDL) = 1.1 x 2.9 = 3.19 kN/m

Live Load (UDL) = 0.6 x 2.9 = 1.74 kN/m

Total Dead Load (UDL) = 3.19 KN/m

Total Live Load (UDL) = 1.74 KN/m

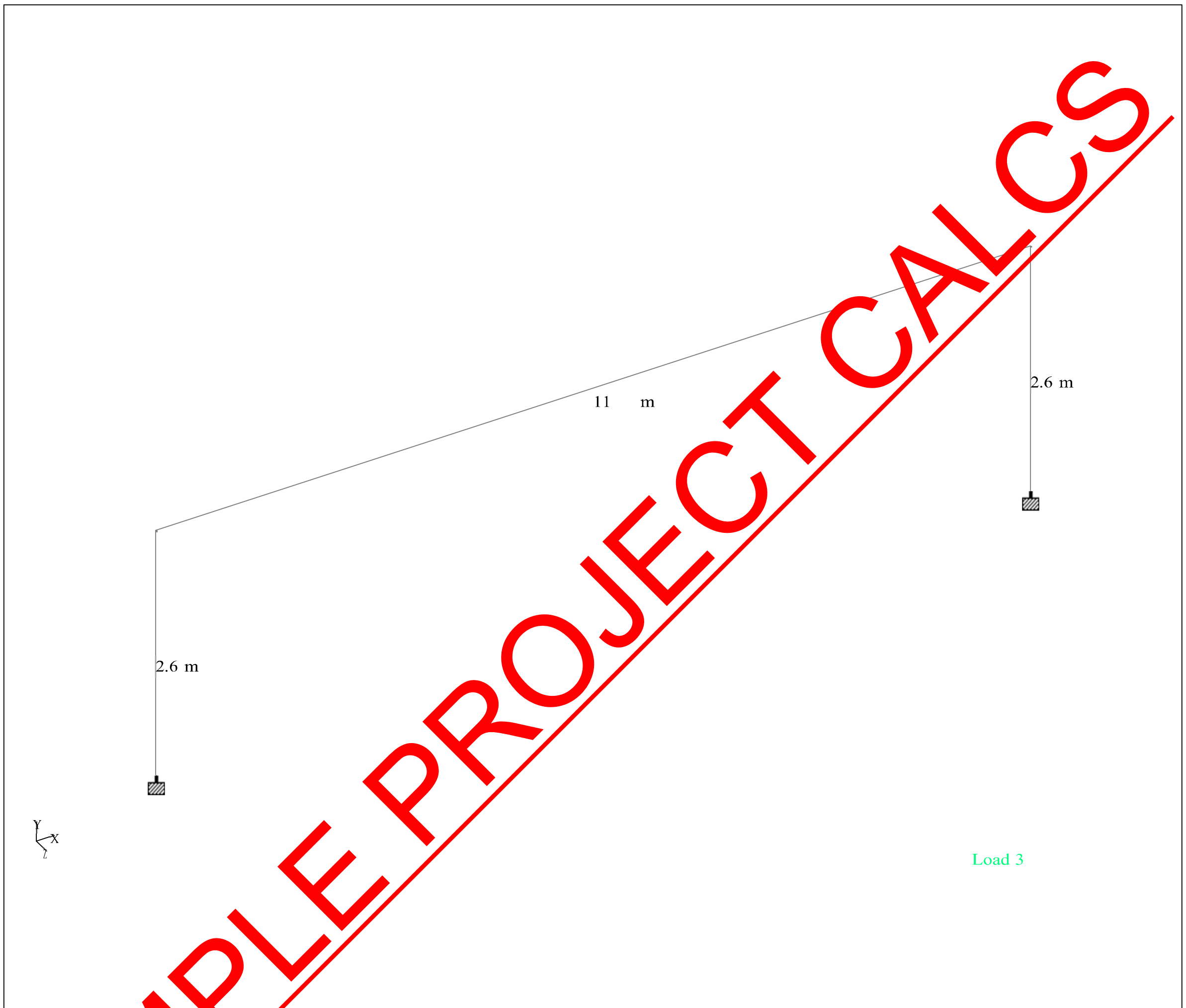

Whole Structure

PEPP PEARL ENGINEERS, PLANNERS & PROJECT MANAGERS 02 TOWERFIELDS WESTERHAM ROAD BROMLEY, BR2 6HF Email: info@Pearlepp.co.uk Website: www. pearlepp.co.uk Tel no. 02035763199	**Project:** 68 GROVE PARK RD UK		**Sheet No./Rev.** 69
	Job Ref. 2024-06-	**Structural Engineer** **MM**	**Date** **11/06/2024**

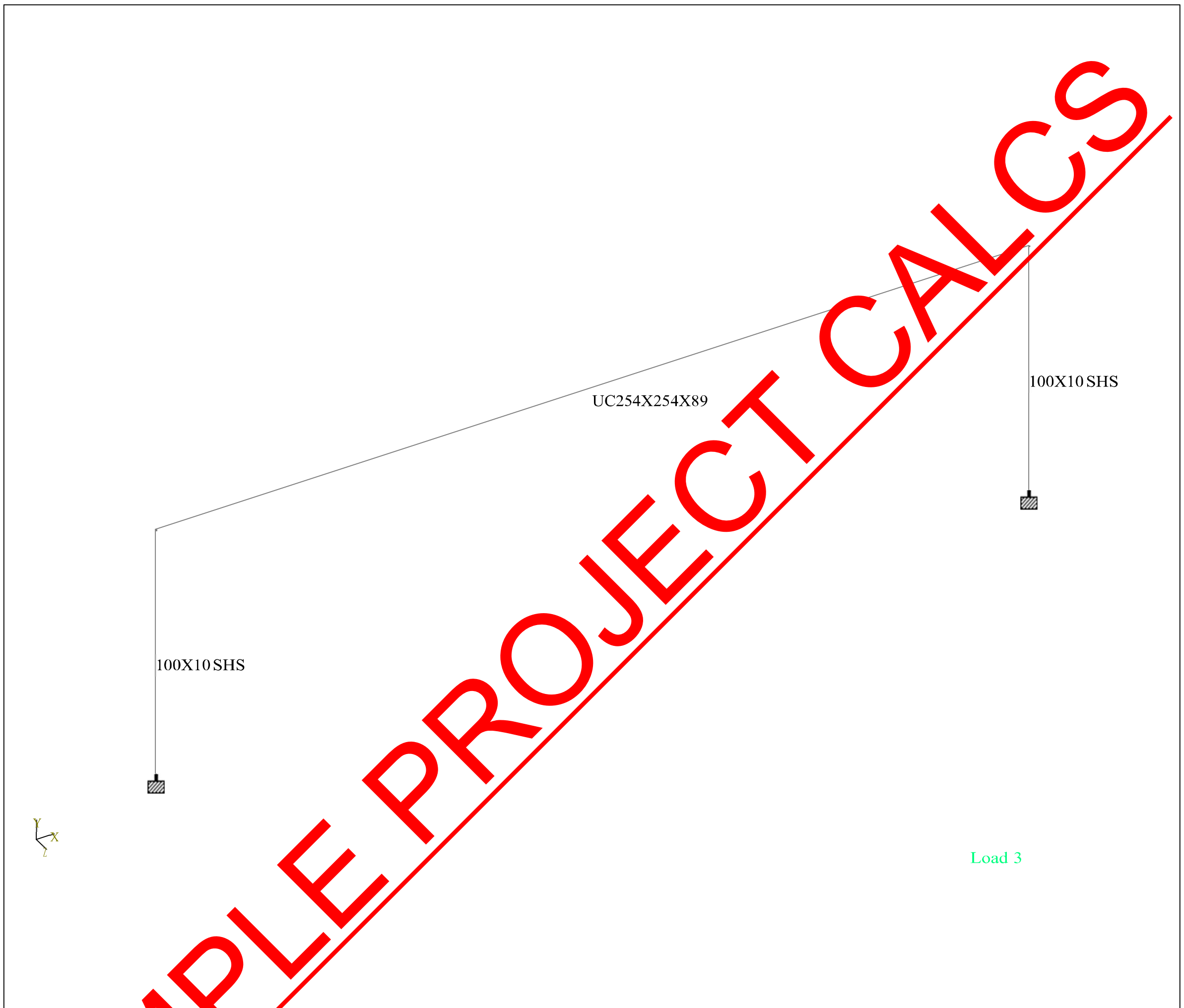

Whole Structure

Whole Structure

Prop	Section	Area (cm^2)	Iyy (cm^4)	Izz (cm^4)	J (cm^4)	Material
1	UC254X254X89	113.000	4.86 E +3	14.3 E +3	102.342	STEEL

2	100x10SHS	34.900	462.000	462.000	729.000	STEEL
3	100X10SHS	34.900	462.000	462.000	729.000	STEEL

Nodes

Node	X (m)	Y (m)	Z (m)
1	0	0	0
2	0	2.600	0
3	10.450	0	0
4	10.450	2.600	0

Beams

Beam	Node A	Node B	Length (m)	Property	□ (degrees)
1	1	2	2.600	2	0
2	2	4	11.0	1	0
3	4	3	2.600	2	0

Section Properties Materials

Mat	Name	E (kN/mm²)	□	Density (kg/m³)	□ (/°C)
1	CONCRETE	21.718	0.170	2.4 E +3	10 E -6
2	ALUMINUM	68.948	0.330	2.71 E +3	23 E -6
3	STEEL_50_KSI	199.948	0.300	7.83 E +3	11.7 E -6
4	STAINLESSSTEEL	197.930	0.300	7.83 E +3	18 E -6
5	STEEL_36_KSI	199.948	0.300	7.83 E +3	11.7 E -6
6	STEEL_275_NMM2	205.000	0.300	7.85 E +3	12 E -6
7	STEEL	205.000	0.300	7.83 E +3	12 E -6
8	STEEL_355_NMM2	205.000	0.300	7.85 E +3	12 E -6

Supports

Node	X (kN/mm)	Y (kN/mm)	Z (kN/mm)	rX (kN-m/deg)	rY (kN-m/deg)	rZ (kN-m/deg)
1	Fixed	Fixed	Fixed	Fixed	Fixed	Fixed
3	Fixed	Fixed	Fixed	Fixed	Fixed	Fixed

Releases

There is no data of this type.

Primary Load Cases

Number	Name	Type

1	DL	Dead
2	LL	Live

Combination Load Cases

Comb.	Combination L/C Name	Primary	Primary L/C Name	Factor
3	UNFACTORED	1	DL	1.00
		2	LL	1.00
4	FACTORED	1	DL	1.40
		2	LL	1.60

Load Generators

There is no data of this type.

1 DL : Beam Loads

Beam	Type		Direction	Fa	Da (m)	Fb	Db	Ecc. (m)
2	UNI	kN/m	GY	-3.190	-	-	-	-

1 DL : Selfweight

Direction	Factor	Assigned Geometry
Y	-1.000	1 - 3

2 LL : Beam Loads

Beam	Type		Direction	Fa	Da (m)	Fb	Db	Ecc. (m)
2	UNI	kN/m	GY	-1.740	-	-	-	-

Node Displacement Summary

	Node	L/C	X (mm)	Y (mm)	Z (mm)	Resultant (mm)	rX (rad)	rY (rad)	rZ (rad)
Max X	2	4:FACTORED	0.020457	-0.163	0	0.164	0	0	-0.011
Min X	4	4:FACTORED	-0.020	-0.163	0	0.164	0	0	0.011
Max Y	1	1:DL	0	0	0	0	0	0	0
Min Y	2	4:FACTORED	0.020457	-0.163	0	0.164	0	0	-0.011
Max Z	1	1:DL	0	0	0	0	0	0	0

Min Z	1	1:DL	0	0	0	0	0	0	0
Max rX	1	1:DL	0	0	0	0	0	0	0
Min rX	1	1:DL	0	0	0	0	0	0	0
Max rY	1	1:DL	0	0	0	0	0	0	0
Min rY	1	1:DL	0	0	0	0	0	0	0
Max rZ	4	4:FACTORED	-0.020	-0.163	0	0.164	0	0	0.011
Min rZ	2	4:FACTORED	0.020457	-0.163	0	0.164	0	0	-0.011
Max Rst	4	4:FACTORED	-0.020	-0.163	0	0.164	0	0	0.011

Beam Displacement Detail Summary

Displacements shown in italic indicate the presence of an offset

	Beam	L/C	d (m)	X (mm)	Y (mm)	Z (mm)	Resultant (mm)
Max X	3	4:FACTORED	0.780	4.093	-0.114	0	4.095
Min X	1	4:FACTORED	1.820	-4.093	-0.114	0	4.094
Max Y	1	1:DL	0	0	0	0	0
Min Y	2	4:FACTORED	5.225	0.000	-37.410	0	37.410
Max Z	1	1:DL	0	0	0	0	0
Min Z	1	1:DL	0	0	0	0	0
Max Rst	2	4:FACTORED	5.225	0.000	-37.410	0	37.410

Beam End Displacement Summary

Displacements shown in italic indicate the presence of an offset

	Beam	Node	L/C	X (mm)	Y (mm)	Z (mm)	Resultant (mm)
Max X	1	2	4:FACTORED	0.020457	-0.163	0	0.164
Min X	2	4	4:FACTORED	-0.020	-0.163	0	0.164
Max Y	1	1	1:DL	0	0	0	0
Min Y	[illegible]	2	4:FACTORED	0.020457	-0.163	0	0.164
Max Z	1	1	1:DL	0	0	0	0
Min Z	1	1	1:DL	0	0	0	0
Max Rst	1	2	4:FACTORED	0.020457	-0.163	0	0.164

PEPP
PEARL ENGINEERS, PLANNERS & PROJECT MANAGERS

02 TOWERFIELDS WESTERHAM ROAD
BROMLEY, BR2 6HF
Email: info@Pearlepp.co.uk
Website: www. pearlepp.co.uk
Tel no. 02035763199

Project: 68 GROVE PARK RD UK

Sheet No./Rev. 74

Job Ref. 2024-06-

Structural Engineer

MM

Date
11/06/2024

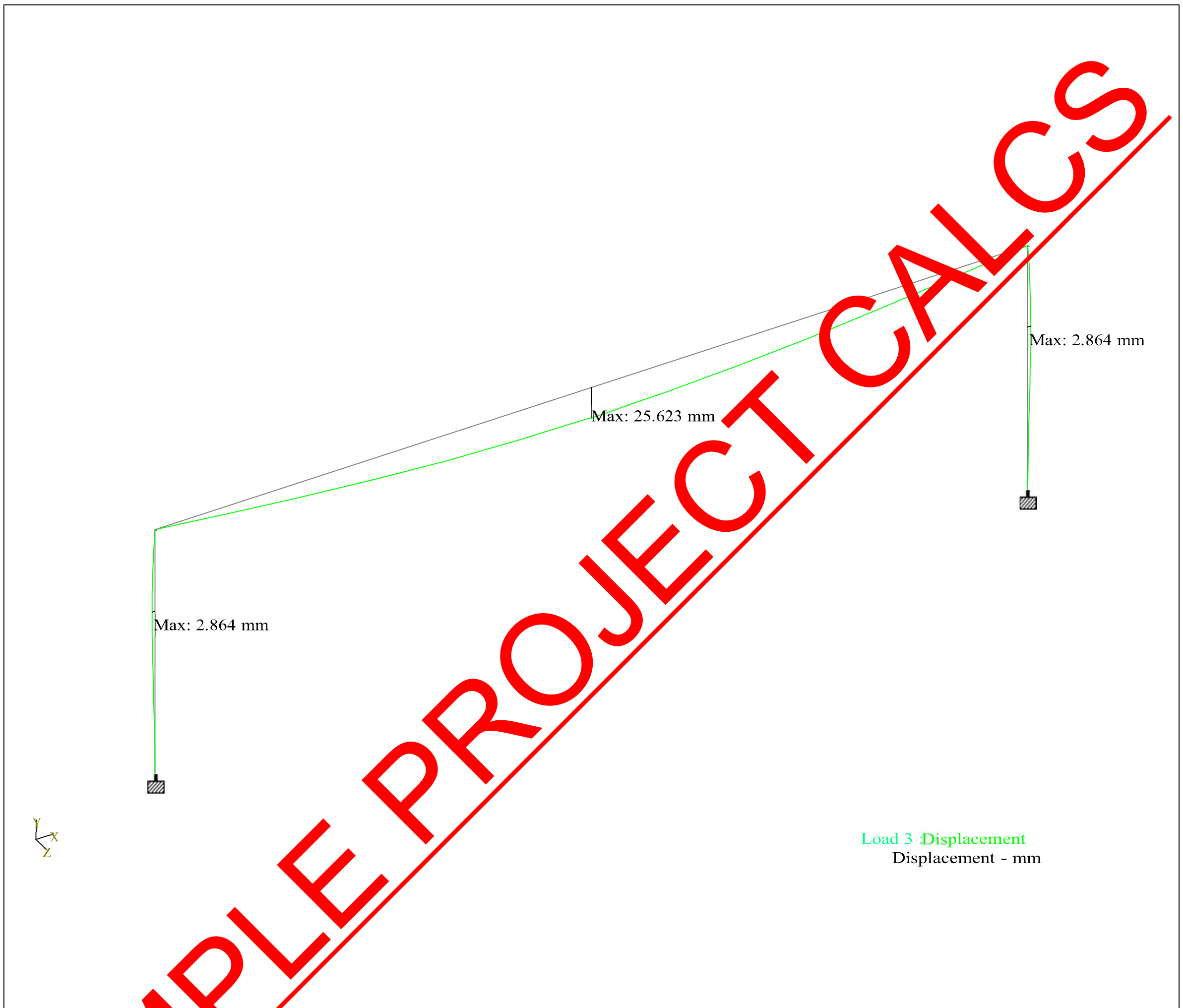

Whole Structure Displacements 80mm:1m 3 UNFACTORED

Beam End Force Summary

The signs of the forces at end B of each beam have been reversed. For example: this means that the Min Fx entry gives the largest tension value for an beam.

				Axial	Shear		Torsion	Bending	
	Beam	Node	L/C	Fx (kN)	Fy (kN)	Fz (kN)	Mx (kN·m)	My (kN·m)	Mz (kN·m)
Max Fx	1	1	4:FACTORED	45.207	-9.070	0	0	0	-7.813
Min Fx	2	2	2:LL	1.864	9.092	0	0	0	3.241
Max Fy	2	2	4:FACTORED	9.070	44.231	0	0	0	15.768
Min Fy	2	4	4:FACTORED	9.070	-44.231	-0	-0	-0	15.768

Max Fz	1	1	1:DL	21.900	-4.348	0	0	0	-3.745
Min Fz	1	1	1:DL	21.900	-4.348	0	0	0	-3.745
Max Mx	1	1	1:DL	21.900	-4.348	0	0	0	-3.745
Min Mx	1	1	1:DL	21.900	-4.348	0	0	0	-[illegible].745
Max My	1	1	1:DL	21.900	-4.348	0	0	0	[illegible]3.745
Min My	1	1	1:DL	21.900	-4.348	0	0	0	-3.7[illegible]
Max Mz	1	2	4:FACTORED	44.231	-9.070	-0	-0	[illegible]0	1[illegible].768
Min Mz	1	1	4:FACTORED	45.207	-9.070	0	0	[illegible]0	[illegible]7.813

Beam Force Detail Summary

Sign convention as diagrams:- positive above line, negative below line except Fx where positive is compression. Distance d is given from beam end A.

				Axial	Shear		Torsion	Bending	
	Beam	L/C	d (m)	Fx (kN)	Fy (kN)	Fz (kN)	Mx (kN·m)	My (kN·m)	Mz (kN·m)
Max Fx	1	4:FACTORED	0	45.207	-9.0[illegible]0	0	0	0	-7.813
Min Fx	2	2:LL	0	1.864	9.0[illegible]2	0	0	0	3.241
Max Fy	2	4:FACTORED	0	9.070	44.23[illegible]	0	0	0	15.768
Min Fy	2	4:FACTORED	10.450	9.0[illegible]0	[illegible]4.2[illegible]1	-0	-0	-0	15.768
Max Fz	1	1:DL	[illegible]	2[illegible].900	-4.348	0	0	0	-3.745
Min Fz	1	1:DL	[illegible]	21.900	-4.348	0	0	0	-3.745
Max Mx	1	1:DL	0	[illegible]1.900	-4.348	0	0	0	-3.745
Min Mx	1	1:DL	0	21.900	-4.348	0	0	0	-3.745
Max My	1	1:DL	0	21.900	-4.348	0	0	0	-3.745
Min My	1	1:DL	0	21.900	-4.348	0	0	0	-3.745
Max Mz	1	4:F[illegible]CTORED	[illegible]2.600	44.231	-9.070	-0	-0	-0	15.768
Min Mz	2	4:F[illegible]CT[illegible]R[illegible]D	5.225	9.070	0	0	0	0	-99.785

SAMPLE PROJECT CALCS

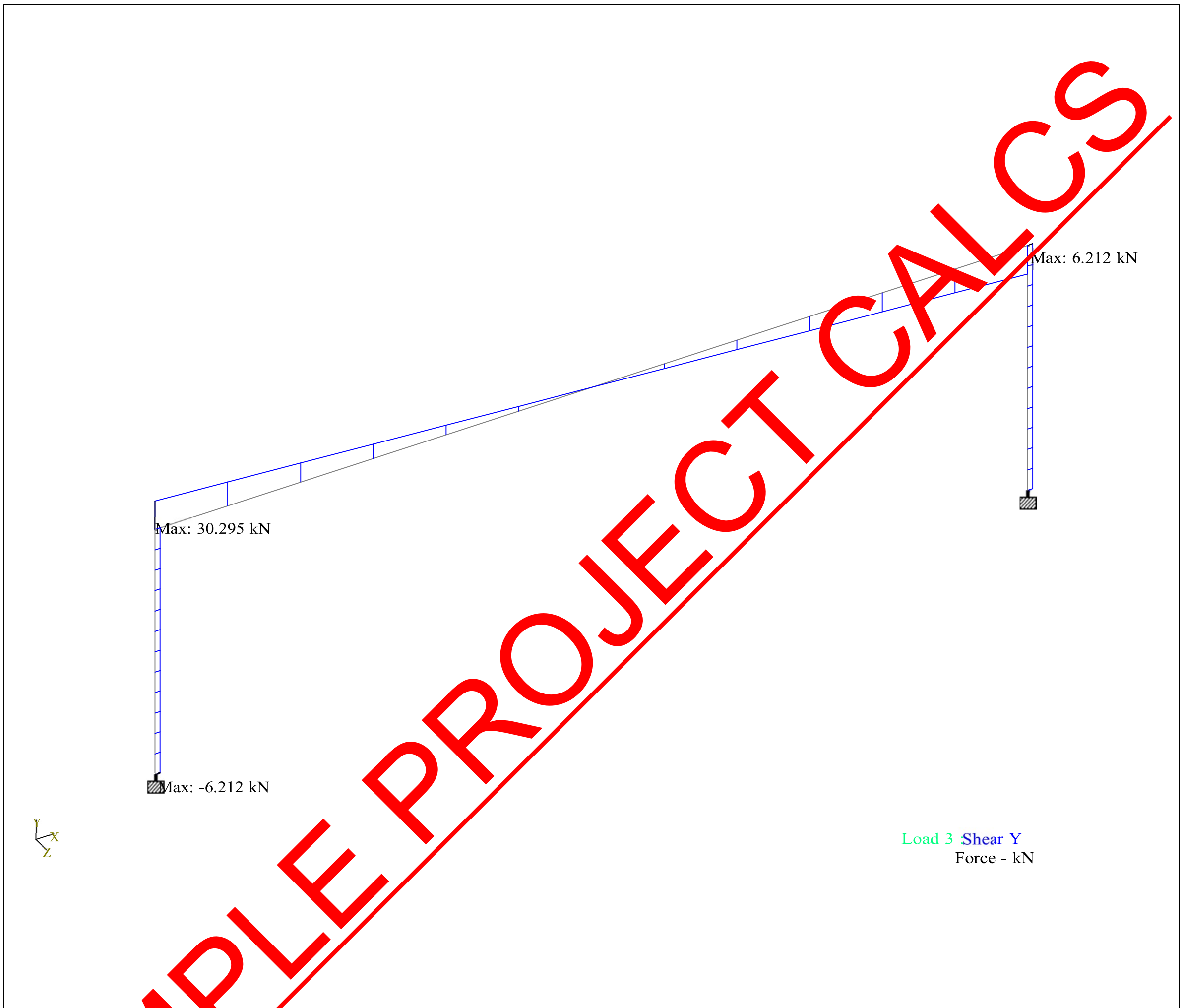

Whole Structure Fy 10 kN:1m 3 UNFACTORED

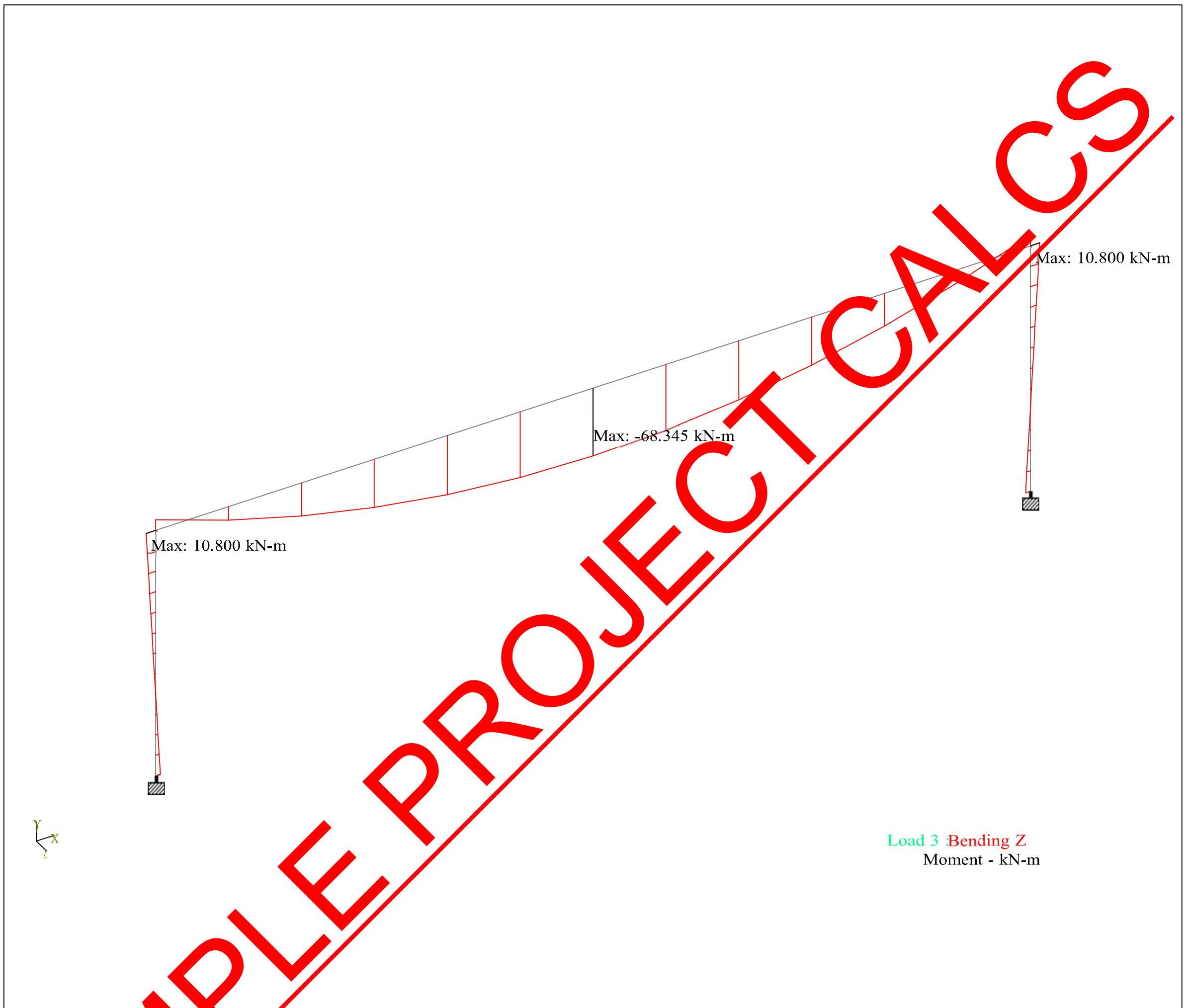

Whole Structure Mz 95kN-m:1m 3 UNFACTORED

PEPP PEARL ENGINEERS, PLANNERS & PROJECT MANAGERS	**Project:** 68 GROVE PARK RD UK	**Sheet No./Rev.** 78
02 TOWERFIELDS WESTERHAM ROAD BROMLEY, BR2 6HF Email: info@Pearlepp.co.uk Website: www. pearlepp.co.uk Tel no. 02035763199	**Job Ref. 2024-06-** / **Structural Engineer** **MM**	**Date** **11/06/2024**

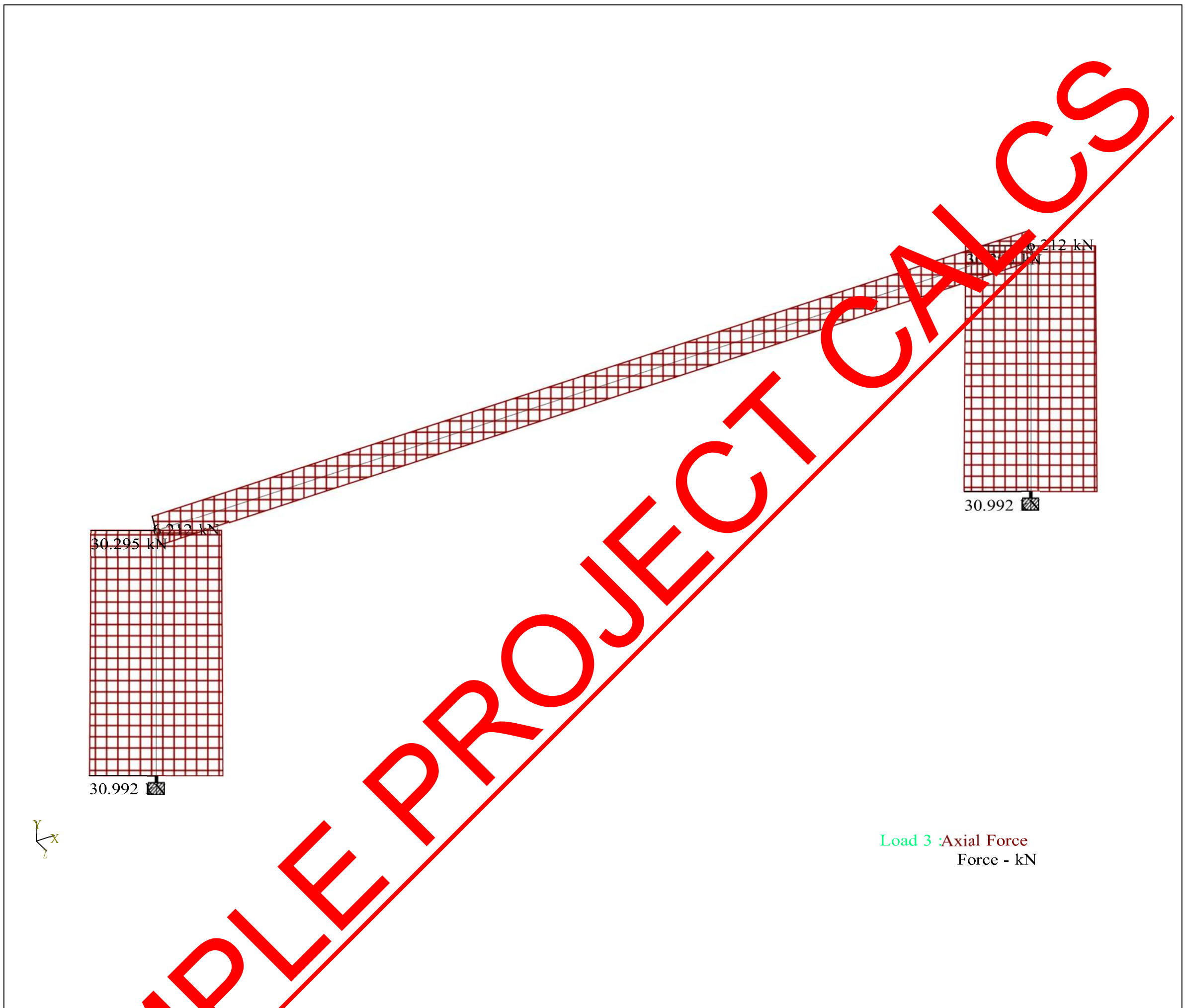

Whole Structure F: 4 kN:1m 3 UNFACTORED

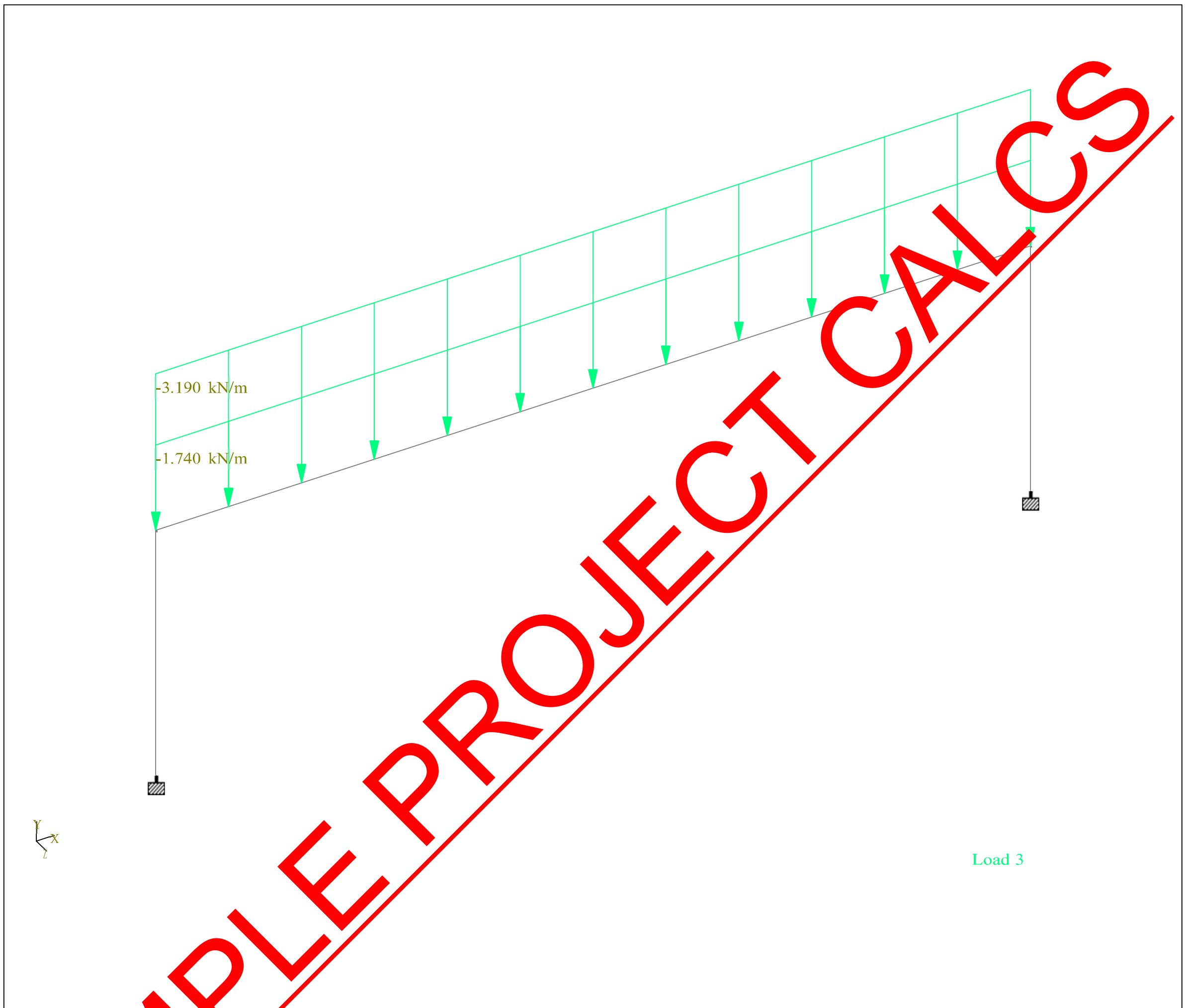

Whole Structure Loads 0.1kN:1m 3 UNFACTORED

Beam Combined Axial and Bending Stresses Summary

			Max Comp			Max Tens		
Beam	L/C	Length (m)	Stress (N/mm^2)	d (m)	Corner	Stress (N/mm^2)	d (m)	Corner
1	1:DL	2.600	87.883	2.600	3	-75.732	2.600	1
	2:LL	2.600	37.682	2.600	3	-32.472	2.600	1
	3:UNFACTORE	2.600	125.566	2.600	3	-108.205	2.600	1
	4:FACTORED	2.600	183.328	2.600	3	-157.981	2.600	1

2	1:DL	10.450	43.921	5.225	1	-43.152	5.225	3
	2:LL	10.450	18.832	5.225	1	-18.502	5.225	3
	3:UNFACTORE	10.450	62.753	5.225	1	-61.654	5.225	3
	4:FACTORED	10.450	91.621	5.225	1	-90.016	5.225	3
3	1:DL	2.600	87.883	0	3	-75.732	0	1
	2:LL	2.600	37.682	0	3	-32.472	0	1
	3:UNFACTORE	2.600	125.566	0	3	-108.205	0	1
	4:FACTORED	2.600	183.328	0	3	-1[illegible]7.9[illegible]1	0	1

Reaction Summary

	Node	L/C	Horizontal	Vertical	Horizontal	Moment		
			FX (kN)	FY (kN)	FZ (kN)	MX (kN·m)	MY (kN·m)	MZ (kN·m)
Max FX	1	4:FACTORED	9.070	45.207	0	0	0	-7.813
Min FX	3	4:FACTORED	-9.070	45.207	0	0	0	7.813
Max FY	1	4:FACTORED	9.070	45.207	0	0	0	-7.813
Min FY	1	2:LL	1.864	[illegible].092	0	0	0	-1.606
Max FZ	1	1:DL	4.348	21.900	0	0	0	-3.745
Min FZ	1	1:DL	4.348	21.900	0	0	0	-3.745
Max MX	1	1:DL	4.348	21.900	0	0	0	-3.745
Min MX	1	1:DL	4.348	21.900	0	0	0	-3.745
Max MY	1	1:DL	4.348	21.900	0	0	0	-3.745
Min MY	1	1:DL	4.348	21.900	0	0	0	-3.745
Max MZ	3	4:FACTORED	-9.070	45.207	0	0	0	7.813
Min MZ	1	4:FACTORED	9.070	45.207	0	0	0	-7.813

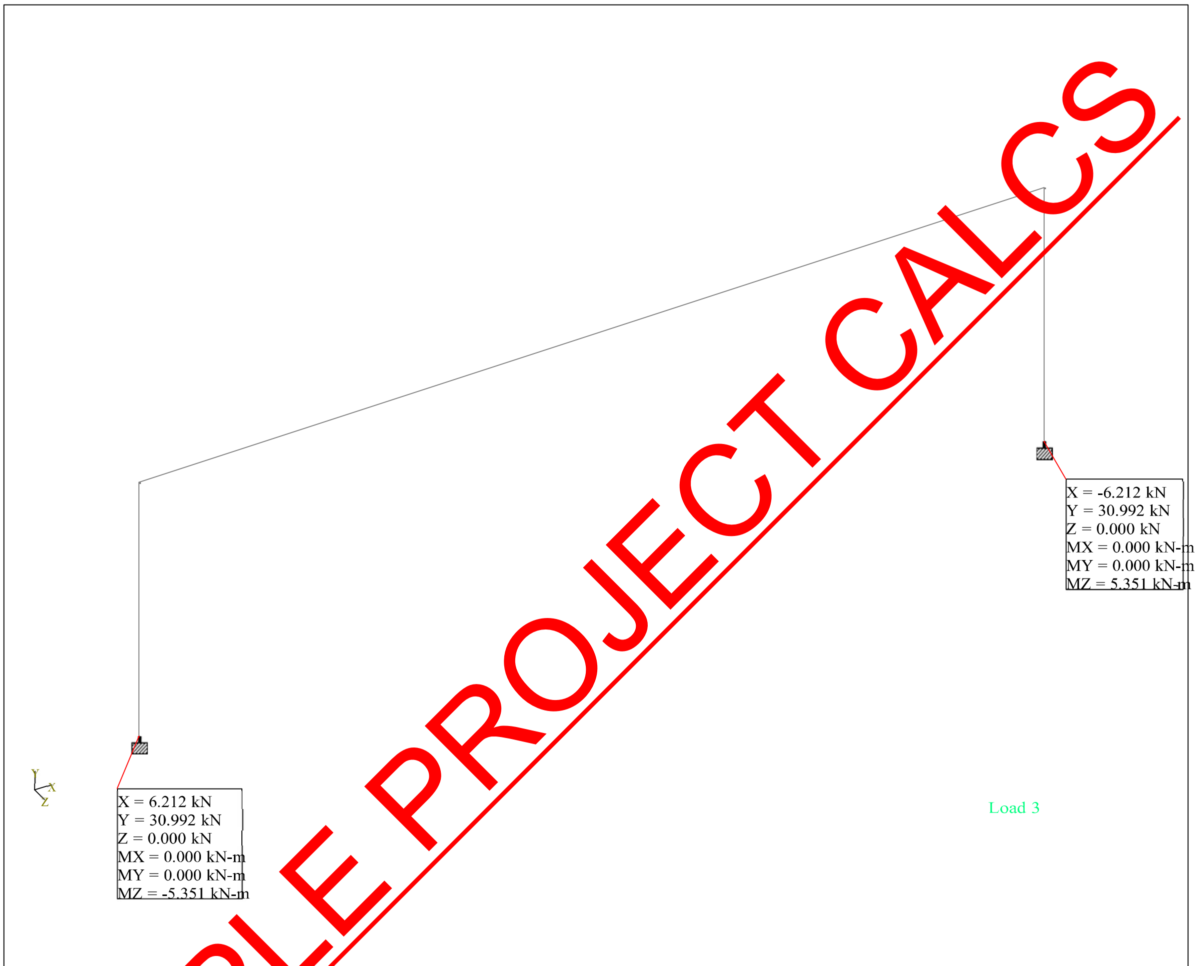

Whole Structure

Utilization Ratio

Beam	Analysis Property	Design Property	Actual Ratio	Allowable Ratio	Ratio (Act./Allow.)	Clause	L/C	Ax (cm^2)	Iz (cm^4)	Iy (cm^4)	Ix (cm^4)
1	100x10SHS	100X10SHS	0.537	1.000	0.537			34.900	462.000	462.000	761.000
2	UC254X254X	UC254X254X	0.528	1.000	0.528			113.000	14.3 E +3	4.86 E +3	102.342
3	100x10SHS	100X10SHS	0.537	1.000	0.537			34.900	462.000	462.000	761.000

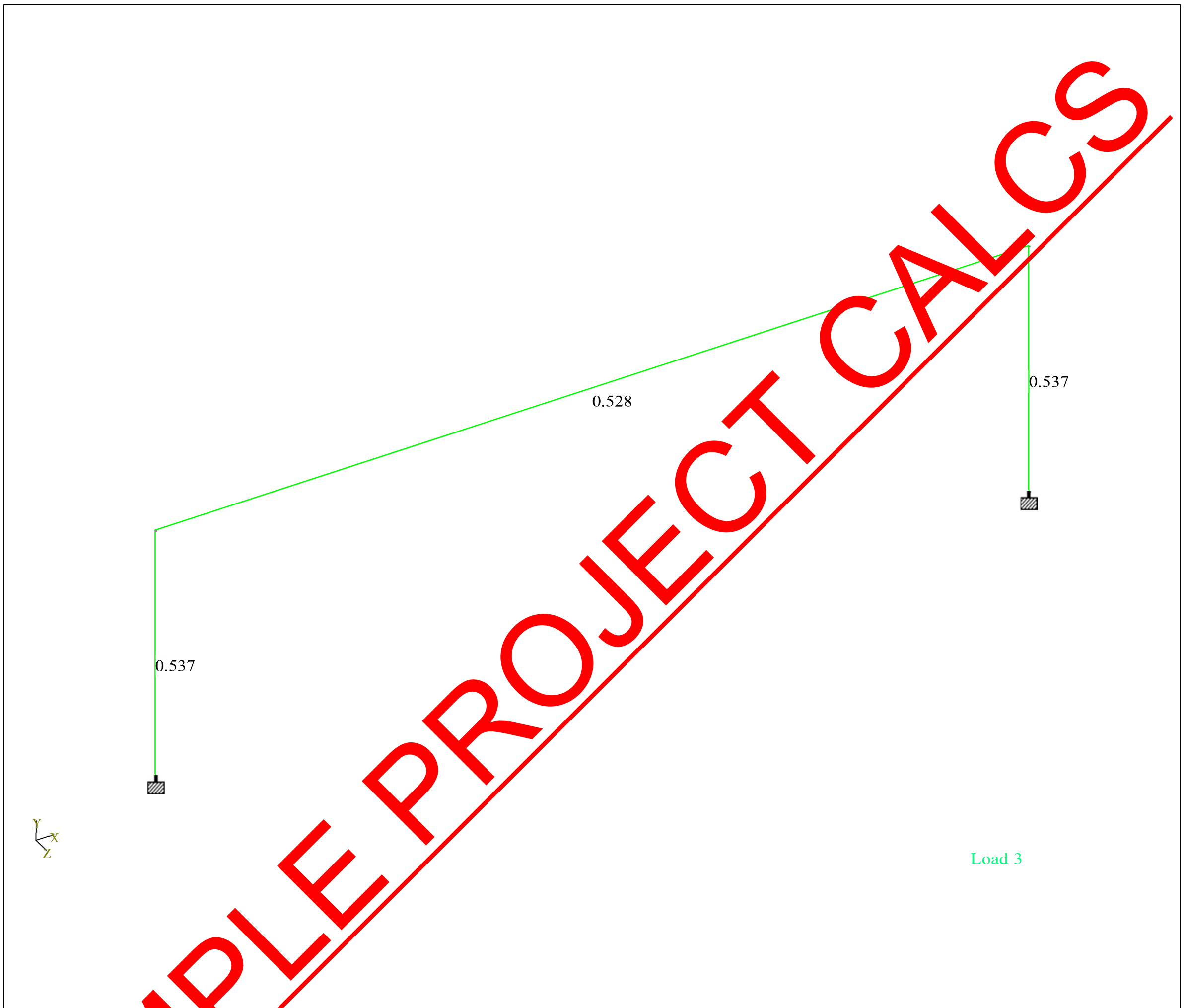

Whole Structure

- **B-21** UB 203 x 102 x 23 (BS4-1) (S275)

Beam, B-21:

Section UB 203 X 102 X 23 (BS4-1) (S-355)

We incorporated the following loads in our calculations for Beam B-21.

Self-Weight: Auto incorporated by software using our steel sectional properties.

Factors used are;

Self-Weight = 1.0

Dead Load = 1.4

Live Load = 1.6

We had taken loadings being applied on our beam 'B-21':

- Flat Roof Load

Our load derivation for each source for Beam B-21 is as follows;

Flat Roof Load;

Dead Load: 1.1 kN/m^2

Live Lead: 0.6 kN/m^2

Tributary Length = 3.45 m

Dead Load (UDL) = 1.1 x 3.45 = 3.79 kN/m

Live Load (UDL) = 0.6 x 3.45 = 2.07 kN/m

Total Dead Load (UDL) = 3.19 KN/m

Total Live Load (UDL) = 1.74 KN/m

PEPP PEARL ENGINEERS, PLANNERS & PROJECT MANAGERS	**Project:** 68 GROVE PARK RD UK		**Sheet No./Rev.** 84
02 TOWERFIELDS WESTERHAM ROAD BROMLEY, BR2 6HF Email: info@Pearlepp.co.uk Website: www. pearlepp.co.uk Tel no. 02035763199	**Job Ref. 2024-06-**	**Structural Engineer** **MM**	**Date** **11/06/2024**

STEEL BEAM ANALYSIS & DESIGN (BS5950)

In accordance with BS5950-1:2000 incorporating Corrigendum No.1

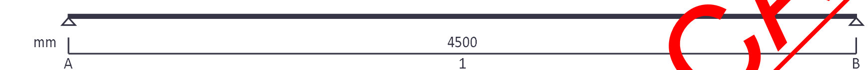

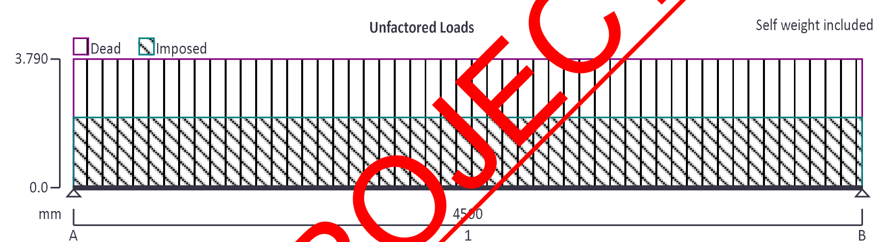

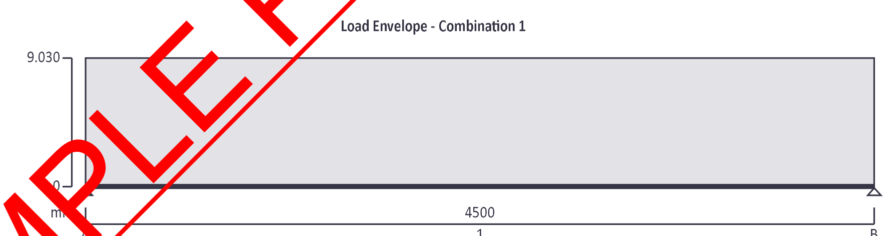

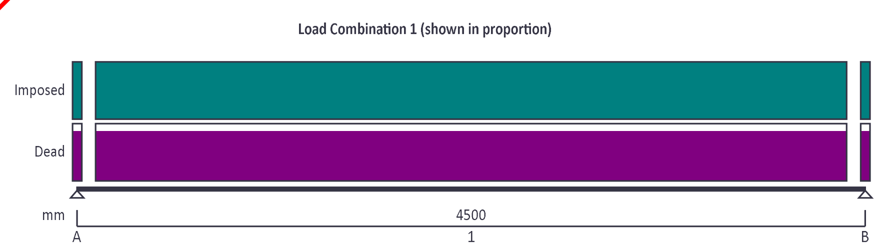

PEPP PEARL ENGINEERS, PLANNERS & PROJECT MANAGERS 02 TOWERFIELDS WESTERHAM ROAD BROMLEY, BR2 6HF Email: info@Pearlepp.co.uk Website: www. pearlepp.co.uk Tel no. 02035763199	**Project:** 68 GROVE PARK RD UK		**Sheet No./Rev.** 85
	Job Ref. 2024-06-	**Structural Engineer** **MM**	**Date** **11/06/2024**

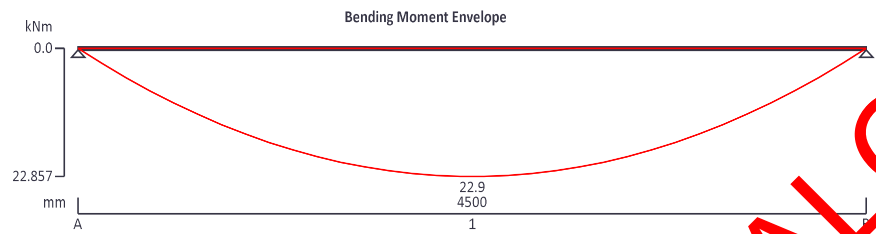

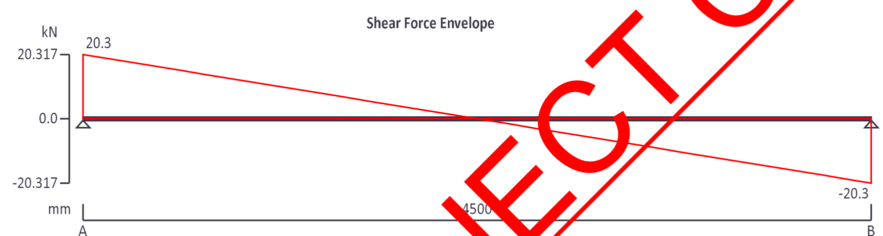

Support conditions

Support A	Vertically restrained
	Rotationally free
Support B	Vertically restrained
	Rotationally free

Applied loading

Beam loads	SW - Dead self weight of beam × 1
	DL - Dead full UDL 3.79 kN/m
	LL - Imposed full UDL 2.07 kN/m

Load combinations

Load combination 1	Support A	Dead × 1.40
		Imposed × 1.60
		Dead × 1.40
		Imposed × 1.60
	Support B	Dead × 1.40
		Imposed × 1.60

Analysis results

Maximum moment;	M_{max} = **22.9** kNm;	M_{min} = **0** kNm
Maximum shear;	V_{max} = **20.3** kN;	V_{min} = **-20.3** kN
Deflection;	δ_{max} = **5.5** mm;	δ_{min} = **0** mm
Maximum reaction at support A;	R_{A_max} = **20.3** kN;	R_{A_min} = **20.3** kN
Unfactored dead load reaction at support A;	R_{A_Dead} = **9.2** kN	

PEPP
PEARL ENGINEERS, PLANNERS & PROJECT MANAGERS
02 TOWERFIELDS WESTERHAM ROAD
BROMLEY, BR2 6HF
Email: info@Pearlepp.co.uk
Website: www. pearlepp.co.uk
Tel no. 02035763199

Unfactored imposed load reaction at support A; $R_{A\_Imposed}$ = **4.7** kN

Maximum reaction at support B; R_{B_max} = **20.3** kN; R_{B_min} = **20.3** kN

Unfactored dead load reaction at support B; R_{B_Dead} = **9.2** kN

Unfactored imposed load reaction at support B; $R_{B\_Imposed}$ = **4.7** kN

Section details

Section type; **UB 203x133x30 (BS4-1)**

Steel grade; **S275**

From table 9: Design strength p_y

Thickness of element; max(T, t) = **9.6** mm

Design strength; p_y = **275** N/mm^2

Modulus of elasticity; E = **205000** N/mm^2

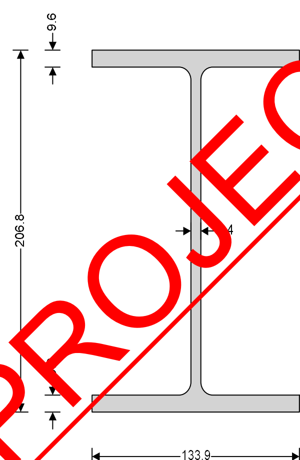

Lateral restraint

Span 1 has lateral restraint at supports only

Effective length factors

Effective length factor in major axis; K_x = **1.00**

Effective length factor in minor axis; K_y = **1.00**

Effective length factor for lateral-torsional buckling; $K_{LT.A}$ = **1.20**; + 2 × D

$K_{LT.B}$ = **1.20**; + 2 × D

Classification of cross sections - Section 3.5

$\varepsilon = \sqrt{[275 \text{ N/mm}^2 / p_y]}$ = **1.00**

Internal compression parts - Table 11

Depth of section; d = **172.4** mm

d / t = 26.9 × ε <= 80 × ε; Class 1 plastic

Outstand flanges - Table 11

Width of section; b = B / 2 = **67** mm

b / T = 7.0 × ε <= 9 × ε; Class 1 plastic

Section is class 1 plastic

Shear capacity - Section 4.2.3

Design shear force; $F_v = max(abs(V_{max}), abs(V_{min}))$ = **20.3** kN

$d / t < 70 \times \varepsilon$

Web does not need to be checked for shear buckling

Shear area; $A_v = t \times D$ = **1324** mm^2

Design shear resistance; $P_v = 0.6 \times p_y \times A_v$ = **218.4** kN

PASS - Design shear resistance exceeds design shear force

Moment capacity - Section 4.2.5

Design bending moment; $M = max(abs(M_{s1\_max}), abs(M_{s1\_min}))$ = **22.9** kNm

Moment capacity low shear - cl.4.2.5.2; $M_c = min(p_y \times S_{xx}, 1.2 \times p_y \times Z_{xx})$ = **86.5** kNm

Effective length for lateral-torsional buckling - Section 4.3.5

Effective length for lateral torsional buckling; $L_E = 1.2 \times L_{s1} + 2 \times D$ = **5814** mm

Slenderness ratio; $\lambda = L_E / r_{yy}$ = **183.233**

Equivalent slenderness - Section 4.3.6.7

Buckling parameter; u = **0.881**

Torsional index; x = **21.483**

Slenderness factor; $v = 1 / [1 + 0.05 \times (\lambda / x)^2]^{0.25}$ = **0.682**

Ratio - cl.4.3.6.9; β_W = **1.000**

Equivalent slenderness - cl.4.3.6.7; $\lambda_{LT} = u \times v \times \lambda \times \sqrt{[\beta_W]}$ = **110.084**

Limiting slenderness - Annex B.2.2; $\lambda_{L0} = 0.4 \times (\pi^2 \times E / p_y)^{0.5}$ = **34.310**

$\lambda_{LT} > \lambda_{L0}$ - Allowance should be made for lateral-torsional buckling

Bending strength - Section 4.3.6.5

Robertson constant; α_{LT} = **7.0**

Perry factor; $\eta_{LT} = max(\alpha_{LT} \times (\lambda_{LT} - \lambda_{L0}) / 1000, 0)$ = **0.530**

Euler stress; $p_E = \pi^2 \times E / \lambda_{LT}^2$ = **167** N/mm^2

$\phi_{LT} = (p_y + (\eta_{LT} + 1) \times p_E) / 2$ = **265.3** N/mm^2

Bending strength - Annex B.2.1; $p_b = p_E \times p_y / (\phi_{LT} + (\phi_{LT}^2 - p_E \times p_y)^{0.5})$ = **108.9** N/mm^2

Equivalent uniform moment factor - Section 4.3.6.6

Moment at quarter point of segment; M_2 = **17.1** kNm

Moment at centre-line of segment; M_3 = **22.9** kNm

Moment at three quarter point of segment; M_4 = **17.1** kNm

Maximum moment in segment; M_{abs} = **22.9** kNm

Maximum moment governing buckling resistance; $M_{LT} = M_{abs}$ = **22.9** kNm

Equivalent uniform moment factor for lateral-torsional buckling;

$m_{LT} = max(0.2 + (0.15 \times M_2 + 0.5 \times M_3 + 0.15 \times M_4) / M_{abs}, 0.44)$ = **0.925**

Buckling resistance moment - Section 4.3.6.4

Buckling resistance moment; $M_b = p_b \times S_{xx}$ = **34.2** kNm

M_b / m_{LT} = **37** kNm

PASS - Buckling resistance moment exceeds design bending moment

Check vertical deflection - Section 2.5.2

Consider deflection due to dead and imposed loads

Limiting deflection; δ_{lim} = L_{s1} / 250 = **18** mm

Maximum deflection span 1; δ = max(abs(δ_{max}), abs(δ_{min})) = **5.536** mm

PASS - Maximum deflection does not exceed deflection limit

Steel Beam Assembly 3

- **B-22** UC 254 x 254 x 73 (BS4-1) (S275)
- **C-21, C-22** SHS 100 x 100 x 10 (S275)

Beam, B-22:

Section UC 254 X 254 X 73 (BS4-1) (S-355)

We incorporated the following loads in our calculations for Beam B-22.

Self-Weight: Auto incorporated by software using our steel sectional properties.

Factors used are;

Self-Weight = 1.0

Dead Load = 1.4

Live Load = 1.6

We had taken loadings being applied on our beam 'B-22'.

- Flat Roof Load

Our load derivation for each source for Beam B-22 is as follows;

Flat Roof Load;

Dead Load: 1.1 kN/m^2

Live Lead: 0.6 kN/m^2

Tributary Length = 1.5 m

Dead Load (UDL) = 1.1 x 1.5 = 1.65 kN/m

Live Load (UDL) = 0.6 x 1.5 = 1 kN/m

Total Dead Load (UDL) = 1.65 KN/m

Total Live Load (UDL) = 1 KN/m

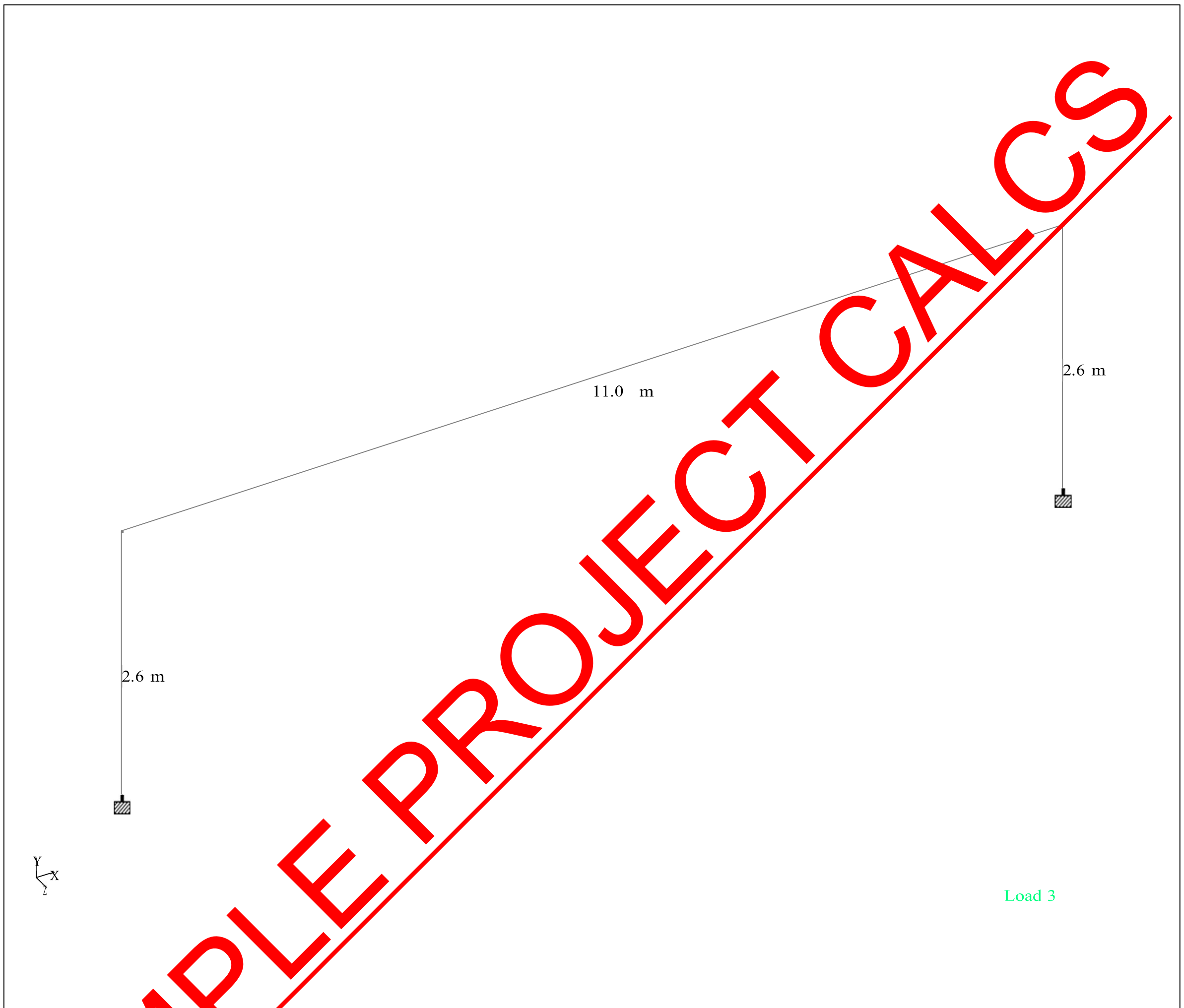

Whole Structure

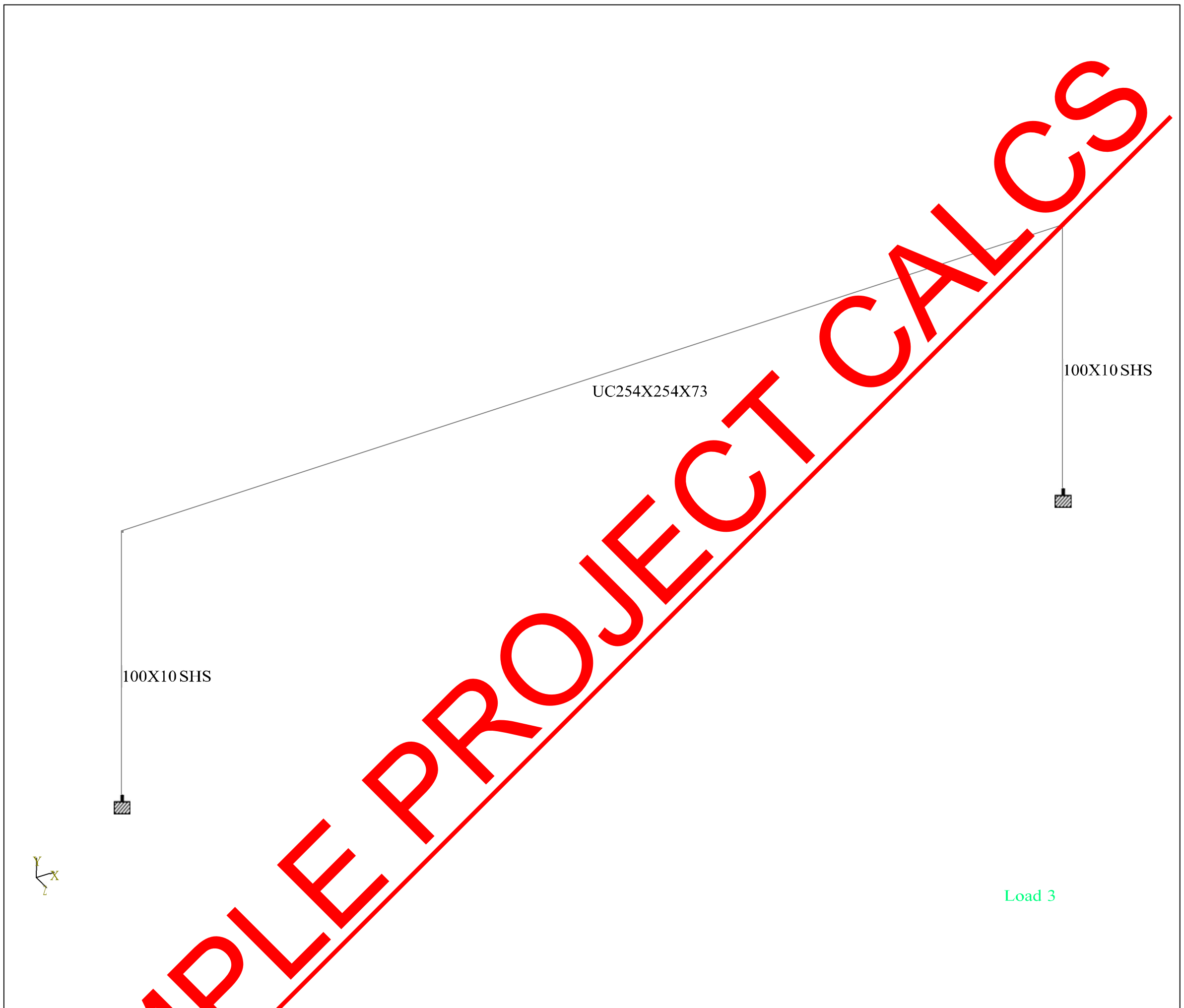

Whole Structure

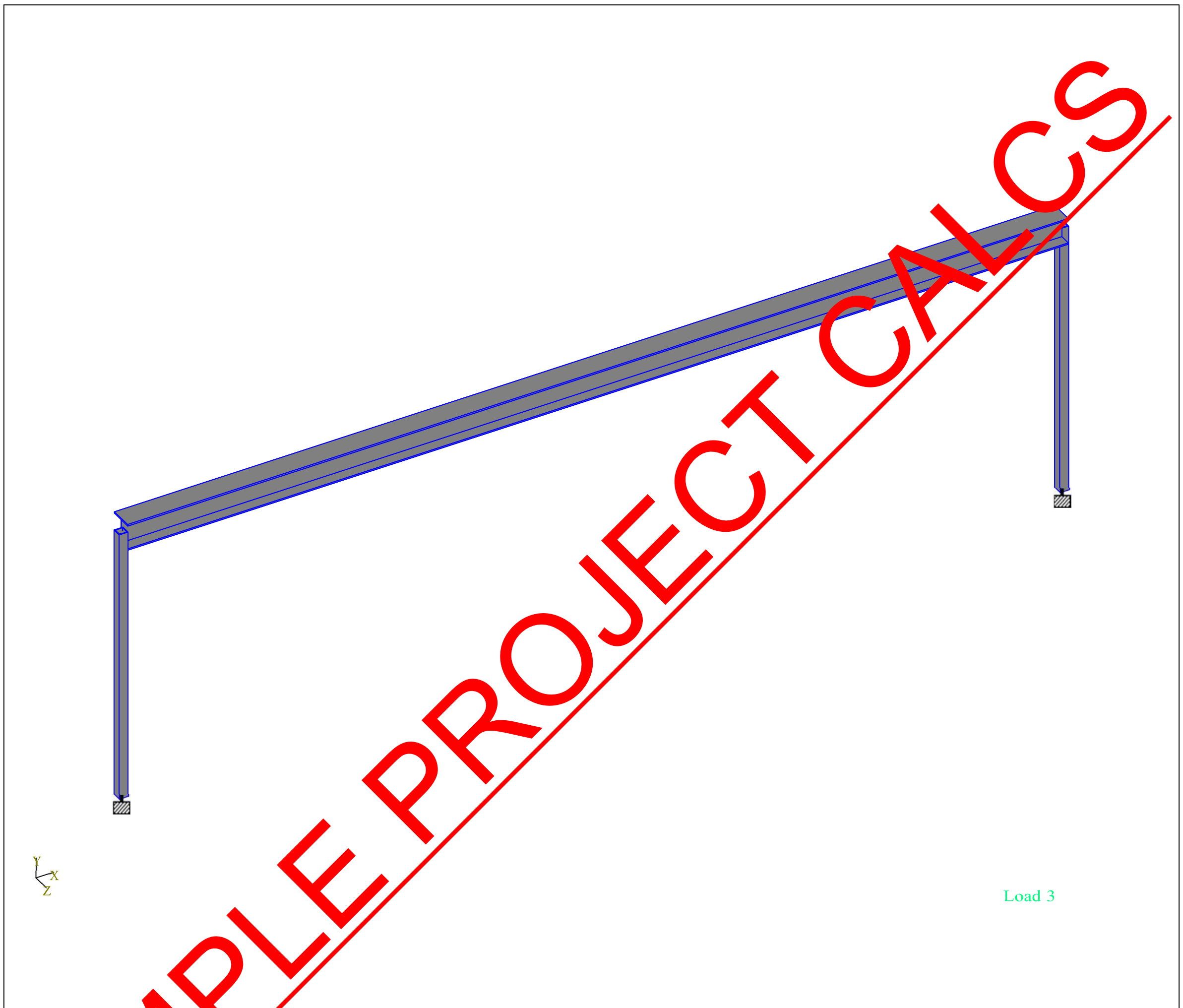

Whole Structure

Prop	Section	Area (cm^2)	Iyy (cm^4)	Izz (cm^4)	J (cm^4)	Material
1	UC254X254X73	93.100	3.91 E +3	11.4 E +3	57.625	STEEL

2	100x10SHS	34.900	462.000	462.000	729.000	STEEL
3	100X10SHS	34.900	462.000	462.000	729.000	STEEL

Nodes

Node	X (m)	Y (m)	Z (m)
1	0	0	0
2	0	-2.600	0
3	10.450	0	0
4	10.450	-2.600	0

Beams

Beam	Node A	Node B	Length (m)	Property	(degrees)
1	2	1	2.600	2	0
2	1	3	11.0	1	0
3	4	3	2.600	2	0

Section Properties Materials

Mat	Name	E (kN/mm²)		Density (kg/m³)	(/°C)
1	CONCRETE	21.718	0.170	2.4 E +3	10 E -6
2	ALUMINUM	68.948	0.330	2.71 E +3	23 E -6
3	STEEL_50_KSI	199.948	0.300	7.83 E +3	11.7 E -6
4	STAINLESSSTEEL	[illegible]7.930	0.300	7.83 E +3	18 E -6
5	STEEL_36_KSI	[illegible]	0.300	7.83 E +3	11.7 E -6
6	STEEL_275_NMM2	[illegible]	0.300	7.85 E +3	12 E -6
7	STEEL	205.000	0.300	7.83 E +3	12 E -6
8	STEEL_[illegible]_NMM2	205.000	0.300	7.85 E +3	12 E -6

Supports

Node	X (kN/mm)	Y (kN/mm)	Z (kN/mm)	rX (kN·m/deg)	rY (kN·m/deg)	rZ (kN·m/deg)
2	Fixed	Fixed	Fixed	Fixed	Fixed	Fixed
4	Fixed	Fixed	Fixed	Fixed	Fixed	Fixed

Releases

There is no data of this type.

Primary Load Cases

Number	Name	Type

1	DL	Dead
2	LL	Live

Combination Load Cases

Comb.	Combination L/C Name	Primary	Primary L/C Name	Factor
3	UNFACTORED	1	DL	1.00
		2	LL	1.00
4	FACTORED	1	DL	1.40
		2	LL	1.60

Load Generators

There is no data of this type.

1 DL : Beam Loads

Beam	Type	Direction	Fa	Da (m)	Fb	Db	Ecc. (m)
2	UNI kN/m	GY	-1.[illegible]50	-	-	-	-

1 DL : Selfweight

Direction	Factor	Assigned Geometry
Y	-1.000	1 - 3

2 LL : Beam Loads

Beam	Type	Direction	Fa	Da (m)	Fb	Db	Ecc. (m)
2	UNI kN/m	GY	-1.000	-	-	-	-

Node Displacement Summary

	Node	L/C	X (mm)	Y (mm)	Z (mm)	Resultant (mm)	rX (rad)	rY (rad)	rZ (rad)
Max X	1	4:FACTORED	0.017	-0.095	0	0.097	0	0	-0.008
Min X	3	4:FACTORED	-0.017	-0.095	0	0.097	0	0	0.008
Max Y	2	1:DL	0	0	0	0	0	0	0
Min Y	1	4:FACTORED	0.017	-0.095	0	0.097	0	0	-0.008
Max Z	1	1:DL	0.008	-0.046	0	0.047	0	0	-0.004

Min Z	1	1:DL	0.008	-0.046	0	0.047	0	0	-0.004
Max rX	1	1:DL	0.008	-0.046	0	0.047	0	0	-0.004
Min rX	1	1:DL	0.008	-0.046	0	0.047	0	0	-0.004
Max rY	1	1:DL	0.008	-0.046	0	0.047	0	0	-0.004
Min rY	1	1:DL	0.008	-0.046	0	0.047	0	0	-0.004
Max rZ	3	4:FACTORED	-0.017	-0.095	0	0.097	0	0	0.008
Min rZ	1	4:FACTORED	0.017	-0.095	0	0.097	0	0	-0.008
Max Rst	3	4:FACTORED	-0.017	-0.095	0	0.097	0	0	0.008

Beam Displacement Detail Summary

Displacements shown in italic indicate the presence of an offset

	Beam	L/C	d (m)	X (mm)	Y (mm)	Z (mm)	Resultant (mm)
Max X	3	4:FACTORED	1.820	2.829	-0.066	0	2.829
Min X	1	4:FACTORED	1.820	-2.829	-0.066	0	2.830
Max Y	1	1:DL	0	0	0	0	0
Min Y	2	4:FACTORED	5.225	-0.000	-26.175	0	26.175
Max Z	1	1:DL	0	0	0	0	0
Min Z	1	1:DL	0	0	0	0	0
Max Rst	2	4:FACTORED	5.225	-0.000	-26.175	0	26.175

Beam End Displacement Summary

Displacements shown in italic indicate the presence of an offset

	Beam	Node	L/C	X (mm)	Y (mm)	Z (mm)	Resultant (mm)
Max X	1	1	4:FACTORED	0.017	-0.095	0	0.097
Min X	2	3	4:FACTORED	-0.017	-0.095	0	0.097
Max Y	1	2	1:DL	0	0	0	0
Min Y	1	1	4:FACTORED	0.017	-0.095	0	0.097
Max Z	1	2	1:DL	0	0	0	0
Min Z	1	2	1:DL	0	0	0	0
Max Rst	1	1	4:FACTORED	0.017	-0.095	0	0.097

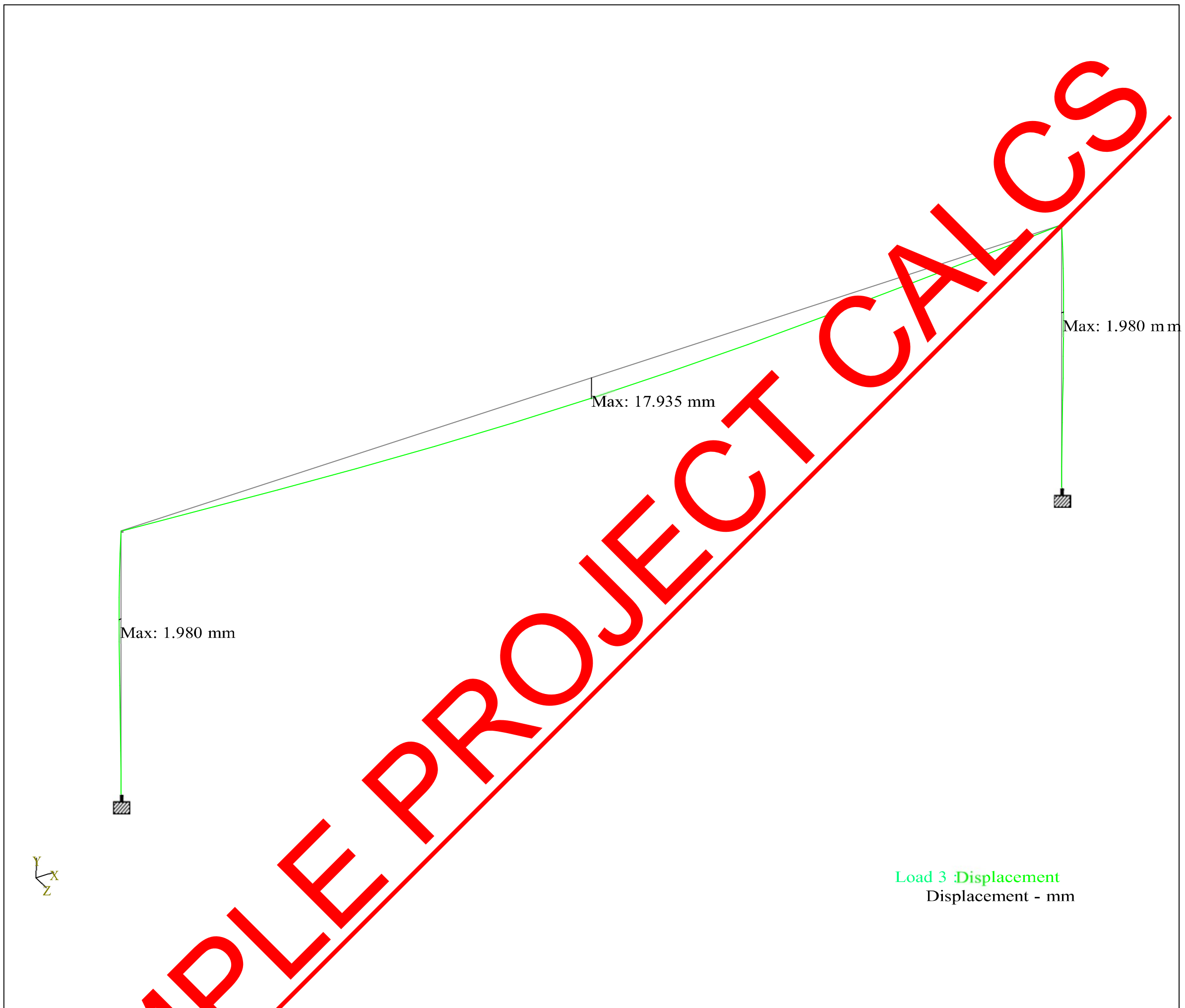

Whole Structure Displacements 90mm:1m 3 UNFACTORED

Beam End Force Summary

The signs of the forces at end B of each beam have been reversed. For example: this means that the Min Fx entry gives the largest tension value for an beam.

				Axial	Shear		Torsion	Bending	
	Beam	Node	L/C	Fx (kN)	Fy (kN)	Fz (kN)	Mx (kN·m)	My (kN·m)	Mz (kN·m)
Max Fx	1	2	4:FACTORED	26.637	-6.272	0	0	0	-5.402
Min Fx	2	1	2:LL	1.277	5.225	0	0	0	2.221
Max Fy	2	1	4:FACTORED	6.272	25.661	0	0	0	10.906
Min Fy	2	3	4:FACTORED	6.272	-25.661	-0	-0	-0	10.906

Max Fz	1	2	1:DL	13.055	-3.021	0	0	0	-2.602
Min Fz	1	2	1:DL	13.055	-3.021	0	0	0	-2.602
Max Mx	1	2	1:DL	13.055	-3.021	0	0	0	-2.602
Min Mx	1	2	1:DL	13.055	-3.021	0	0	0	-2.602
Max My	1	2	1:DL	13.055	-3.021	0	0	0	-2.602
Min My	1	2	1:DL	13.055	-3.021	0	0	0	-2.602
Max Mz	1	1	4:FACTORED	25.661	-6.272	-0	-0	0	10.906
Min Mz	3	3	4:FACTORED	25.661	6.272	-0	-0	0	-10.906

Beam Force Detail Summary

Sign convention as diagrams:- positive above line, negative below line except Fx where positive is compression. Distance d is given from beam end A.

				Axial	Shear		Torsion	Bending	
	Beam	L/C	d (m)	Fx (kN)	Fy (kN)	Fz (kN)	Mx (kN·m)	My (kN·m)	Mz (kN·m)
Max Fx	1	4:FACTORED	0	26.637	-6.272	0	0	0	-5.402
Min Fx	2	2:LL	0	1.277	5.225	0	0	0	2.221
Max Fy	2	4:FACTORED	0	6.272	25.661	0	0	0	10.906
Min Fy	2	4:FACTORED	10.450	6.272	-25.661	-0	-0	-0	10.906
Max Fz	1	1:DL	0	13.055	-3.021	0	0	0	-2.602
Min Fz	1	1:DL	0	13.055	-3.021	0	0	0	-2.602
Max Mx	1	1:DL	0	13.055	-3.021	0	0	0	-2.602
Min Mx	1	1:DL	0	13.055	-3.021	0	0	0	-2.602
Max My	1	1:DL	0	13.055	-3.021	0	0	0	-2.602
Min My	1	1:DL	0	13.055	-3.021	0	0	0	-2.602
Max Mz	1	4:FACTORED	2.600	25.661	-6.272	-0	-0	-0	10.906
Min Mz	2	4:FACTORED	5.225	6.272	0	0	0	0	-56.135

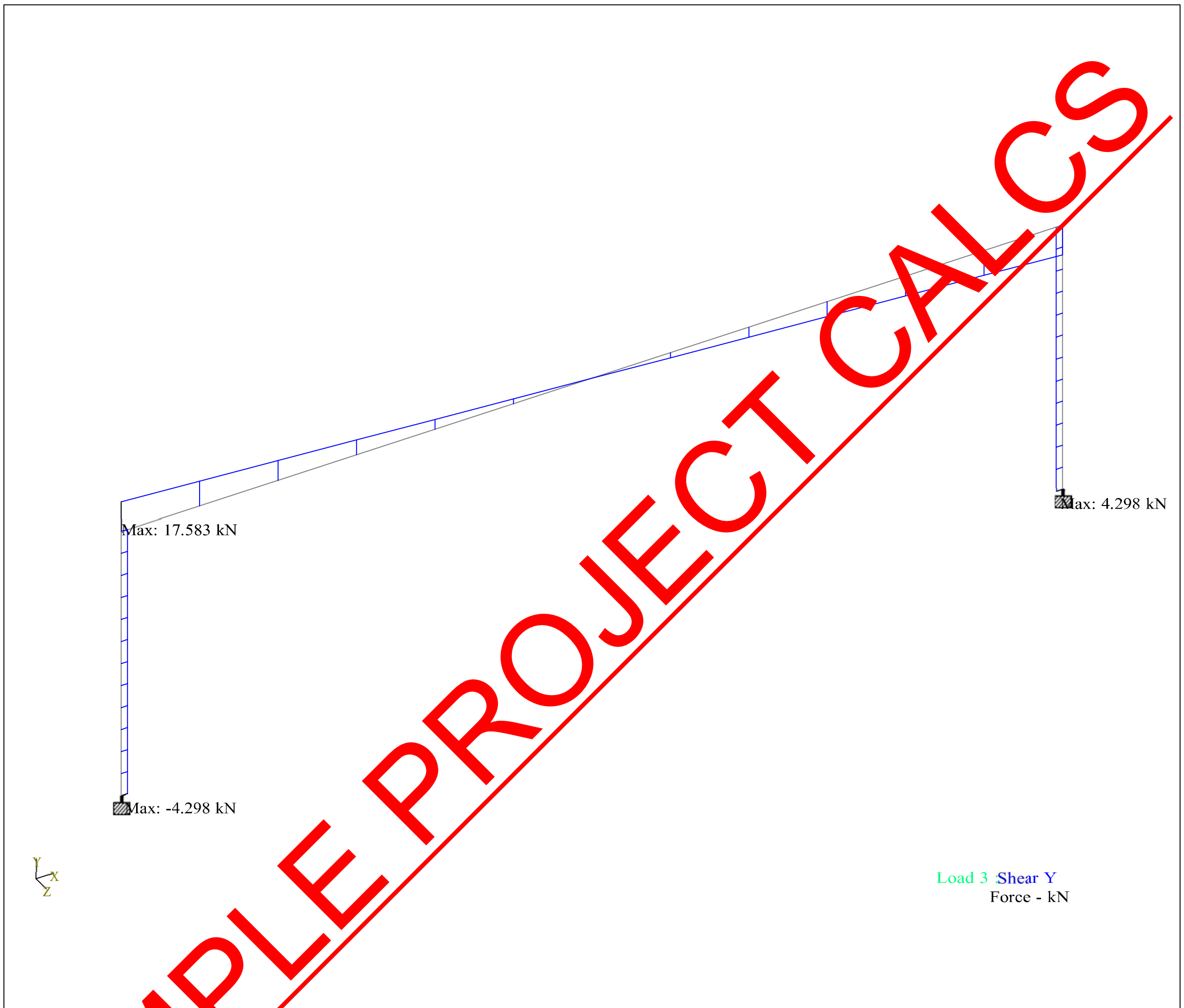

Whole Structure Fy 60kN:1m 3 UNFACTORED

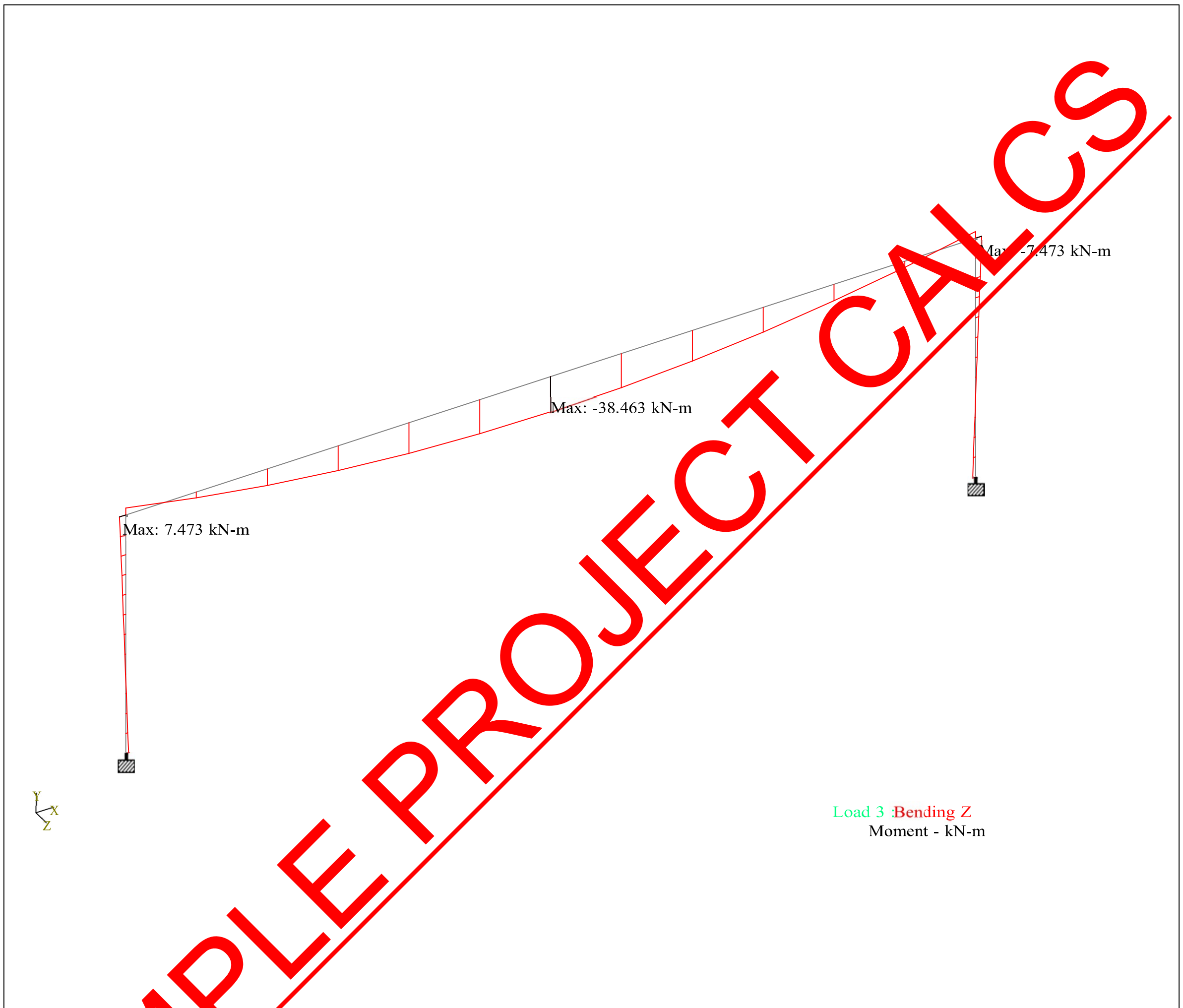

Whole Structure Mz 100kN-m:1m 3 UNFACTORED

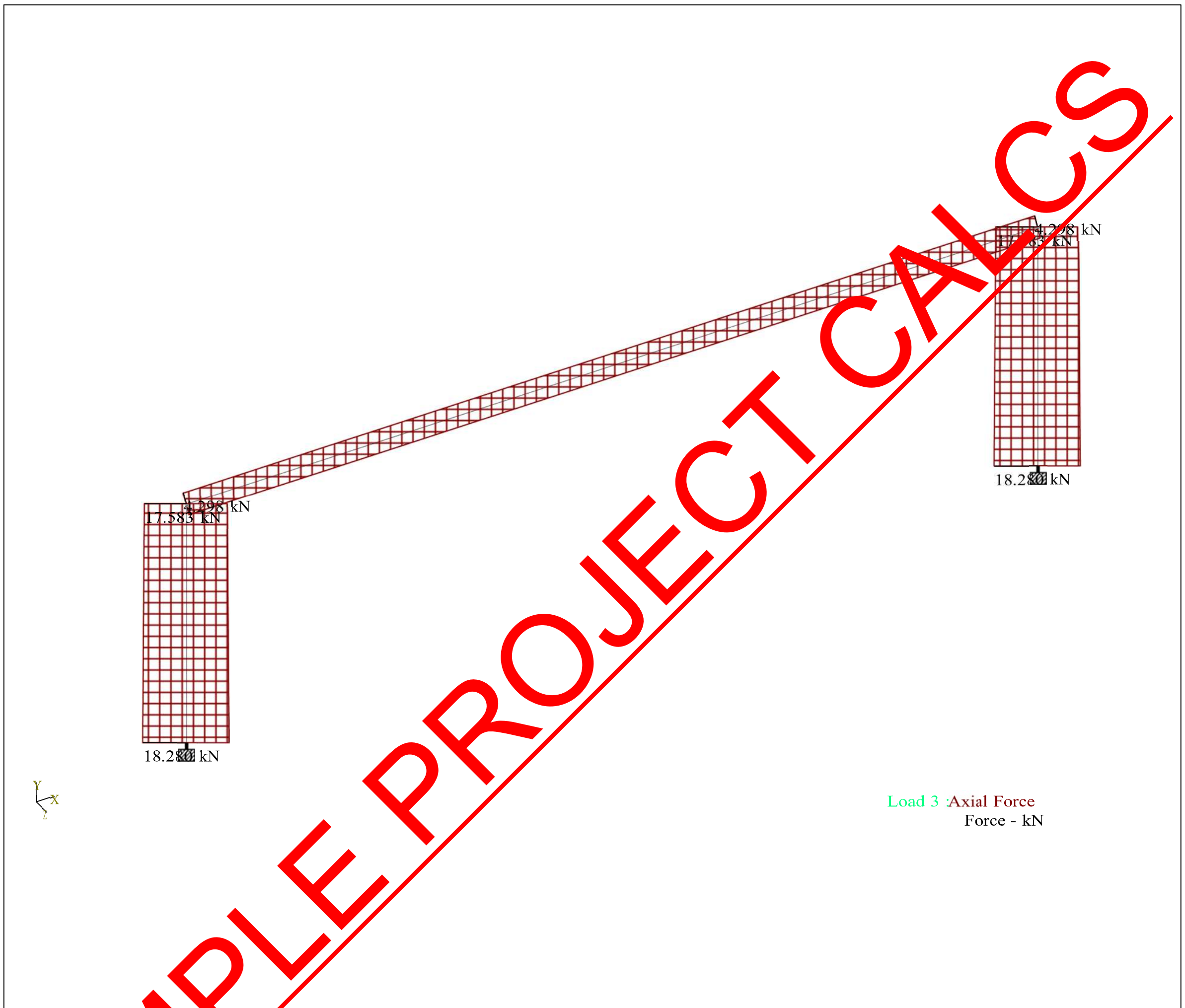

Whole Structure Fx 4 kN:1m 3 UNFACTORED

PEPP PEARL ENGINEERS, PLANNERS & PROJECT MANAGERS 02 TOWERFIELDS WESTERHAM ROAD BROMLEY, BR2 6HF Email: info@Pearlepp.co.uk Website: www. pearlepp.co.uk Tel no. 02035763199	**Project:** 68 GROVE PARK RD UK		**Sheet No./Rev.** 101
	Job Ref. 2024-06-	**Structural Engineer** **MM**	**Date** **11/06/2024**

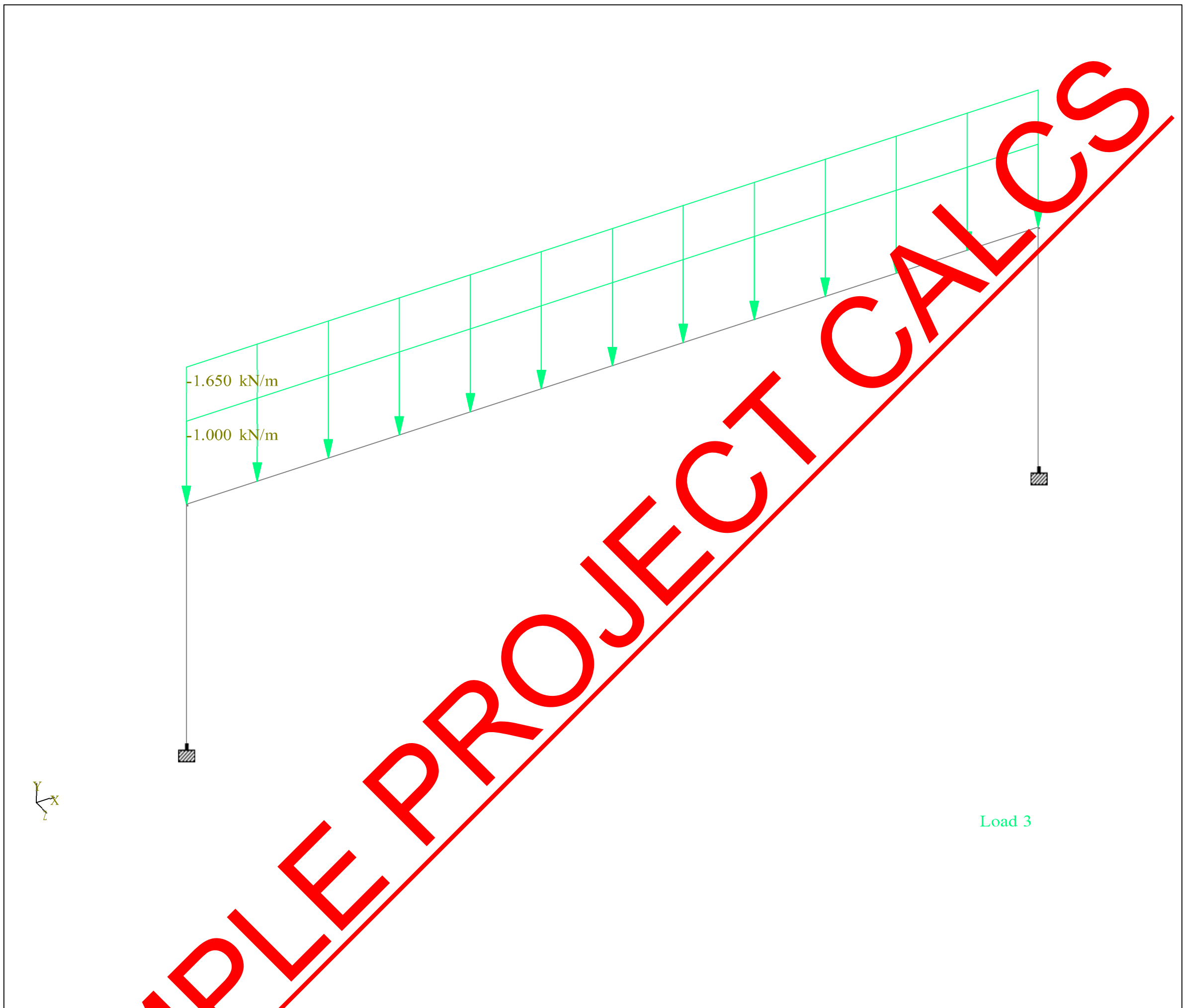

Whole Structure Loads 0.1kN:1m 3 UNFACTORED

Beam Combined Axial and Bending Stresses Summary

			Max Comp			Max Tens		
Beam	L/C	Length (m)	Stress (N/mm^2)	d (m)	Corner	Stress (N/mm^2)	d (m)	Corner
1	1:DL	2.600	60.381	2.600	3	-53.299	2.600	1
	2:LL	2.600	25.529	2.600	3	-22.535	2.600	1
	3:UNFACTORE	2.600	85.910	2.600	3	-75.834	2.600	1
	4:FACTORED	2.600	125.380	2.600	3	-110.674	2.600	1

2	1:DL	10.450	30.453	5.225	1	-29.804	5.225	3
	2:LL	10.450	12.875	5.225	1	-12.601	5.225	3
	3:UNFACTORE	10.450	43.328	5.225	1	-42.405	5.225	3
	4:FACTORED	10.450	63.234	5.225	1	-61.887	5.225	3
3	1:DL	2.600	60.381	2.600	1	-53.299	2.600	3
	2:LL	2.600	25.529	2.600	1	-22.535	2.600	3
	3:UNFACTORE	2.600	85.910	2.600	1	-75.834	2.600	3
	4:FACTORED	2.600	125.380	2.600	1	-110.674	2.600	3

Reaction Summary

			Horizontal	Vertical	Horizontal	Moment		
	Node	L/C	FX (kN)	FY (kN)	FZ (kN)	MX (kN·m)	MY (kN·m)	MZ (kN·m)
Max FX	2	4:FACTORED	6.272	26.637	0	0	0	-5.402
Min FX	4	4:FACTORED	-6.272	26.637	0	0	0	5.402
Max FY	2	4:FACTORED	6.272	26.637	0	0	0	-5.402
Min FY	2	2:LL	1.277	5.225	0	0	0	-1.100
Max FZ	2	1:DL	3.021	13.055	0	0	0	-2.602
Min FZ	2	1:DL	3.021	13.055	0	0	0	-2.602
Max MX	2	1:DL	3.021	13.055	0	0	0	-2.602
Min MX	2	1:DL	3.021	13.055	0	0	0	-2.602
Max MY	2	1:DL	3.021	13.055	0	0	0	-2.602
Min MY	2	1:DL	3.021	13.055	0	0	0	-2.602
Max MZ	4	4:FACTORED	-6.272	26.637	0	0	0	5.402
Min MZ	2	4:FACTORED	6.272	26.637	0	0	0	-5.402

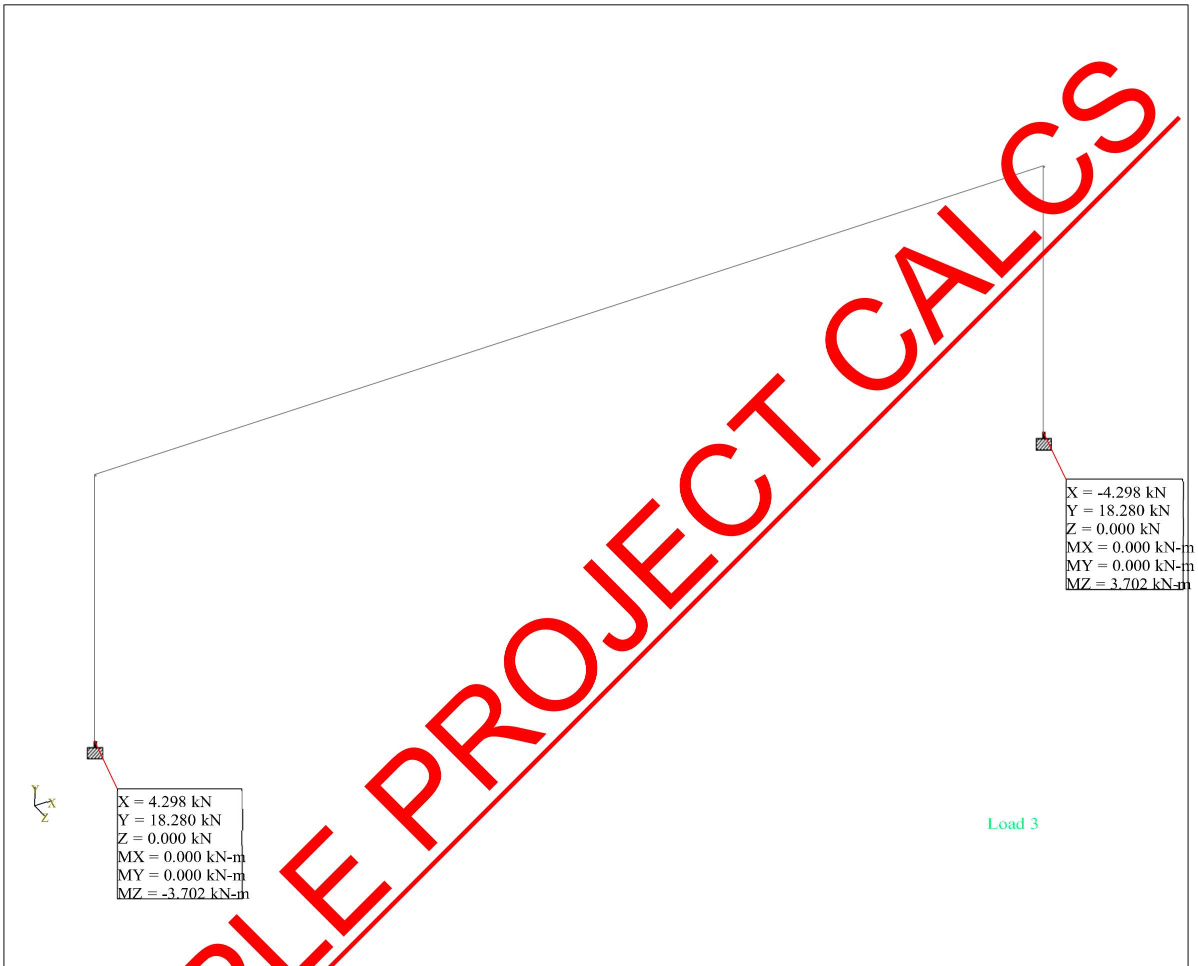

Whole Structure

Utilization Ratio

Beam	Analysis Property	Design Property	Actual Ratio	Allowable Ratio	Ratio (Act./Allow.)	Clause	L/C	Ax (cm^2)	Iz (cm^4)	Iy (cm^4)	Ix (cm^4)
1	100x10SHS	100X10SHS	0.370	1.000	0.370	EC-6.3.3-662	4	34.900	462.000	462.000	761.000
2	UC254X254X	UC254X254X	0.398	1.000	0.398	ANNEX I.1	4	93.100	11.4 E +3	3.91 E +3	57.625
3	100x10SHS	100X10SHS	0.370	1.000	0.370	EC-6.3.3-662	4	34.900	462.000	462.000	761.000

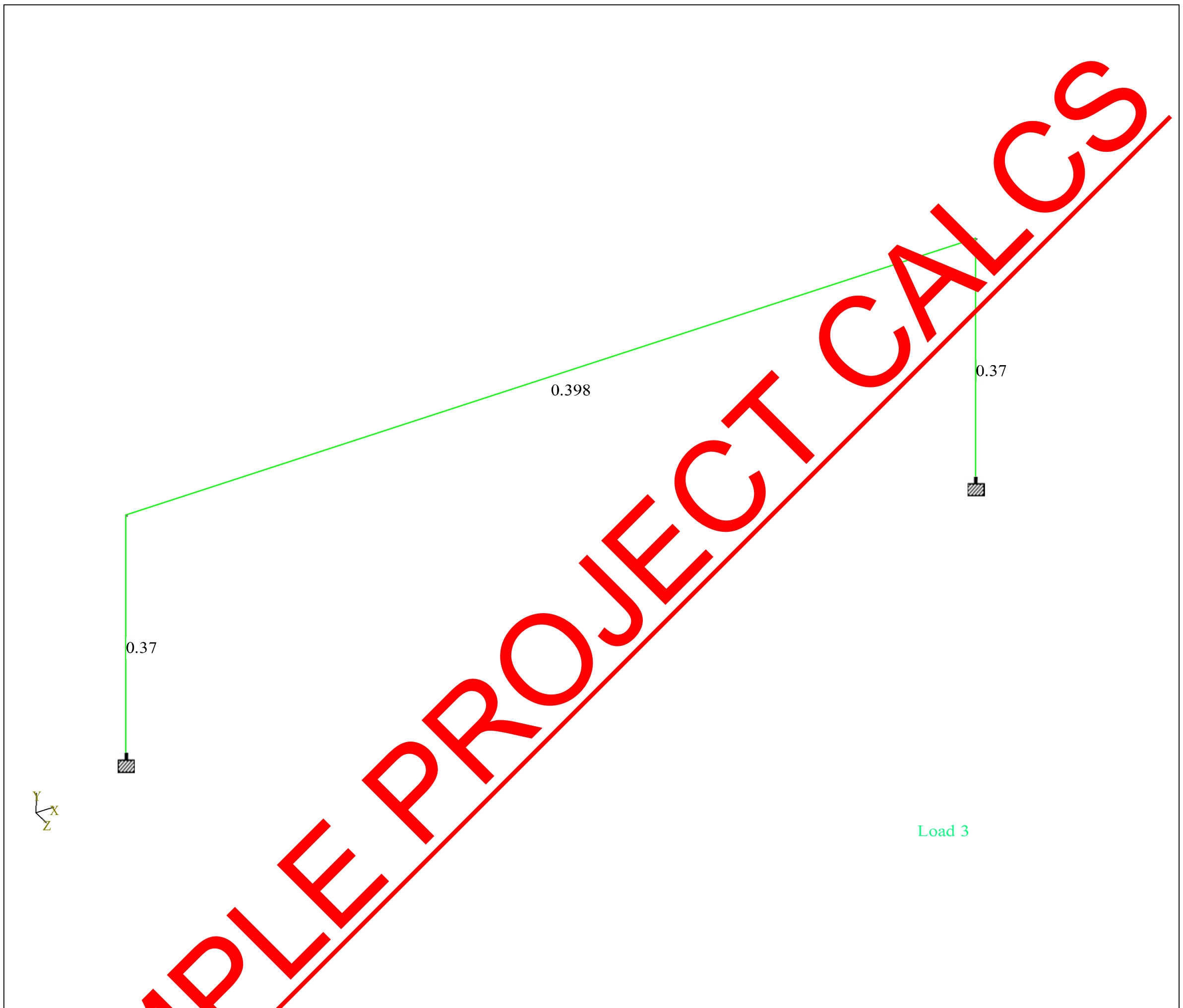

Whole Structure

Steel Beam Assembly 4

- **B-23** UB 152 x 89 x 16 (BS4-1) (S275)
- **B-24** UB 152 x 89 x 16 (BS4-1) (S275)
- **B-25** UB 152 x 89 x 16 (BS4-1) (S275)
- **B-26** UB 152 x 89 x 16 (BS4-1) (S275)
- **B-27** UB 152 x 89 x 16 (BS4-1) (S275)
- **B-28** UB 152 x 89 x 16 (BS4-1) (S275)
- **B-29** UB 203 x 133 x 30 (BS4-1) (S275)
- **B-30** UB 203 x 133 x 30 (BS4-1) (S275)
- **C-24, C-25, C-26, C-27** CHS 88.9 x 5 (S275)
- **C-28, C-29, C-30, C-31** SHS 100 x 100 x 5 (S275)

Beam, B-23:

Section UB 152 X 89 X 16 (BS4-1) (S-275)

We incorporated the following loads in our calculations for Beam B-23.

Self-Weight: Auto incorporated by software using our steel sectional properties.

Factors used are;

Self-Weight = 1.0

Dead Load = 1.4

Live Load = 1.6

We had taken loadings being applied on our beam 'B-23':

- Cavity Wall Load

Our load derivation for each source for Beam B-23 is as follows;

Cavity Wall Load;

Dead Load: 4.4 kN/m^2

Wall height = 2 m

Dead Load (UDL) = 8.8 kN/m

Total Dead Load (UDL) = 8.8 KN/m

Beam, B-24:

Section UB 152 X 89 X 16 (BS4-1) (S-275)

We incorporated the following loads in our calculations for Beam B-24.

Self-Weight: Auto incorporated by software using our steel sectional properties.

Factors used are;

Self-Weight = 1.0

Dead Load = 1.4

Live Load = 1.6

We had taken loadings being applied on our beam 'B-24':

- Cavity Wall Load

Our load derivation for each source for Beam B-24 is as follows;

Cavity Wall Load;

Dead Load: 4.4 kN/m^2

Wall height = 2 m

Dead Load (UDL) = 8.8 kN/m

Total Dead Load (UDL) = 8.8 kN/m

Beam, B-25:

Section UB 152 X 89 X 16 (BS4-1) (S-275)

We incorporated the following loads in our calculations for Beam B-25.

Self-Weight: Auto incorporated by software using our steel sectional properties.

Factors used are;

Self-Weight = 1.0

Dead Load = 1.4

Live Load = 1.6

We had taken loadings being applied on our beam 'B-25':

- Cavity Wall Load

Our load derivation for each source for Beam B-25 is as follows;

Cavity Wall Load;

Dead Load: 4.4 kN/m^2

Wall height = 2 m

Dead Load (UDL) = 8.8 kN/m

Total Dead Load (UDL) = 8.8 KN/m

Beam, B-26:

Section UB 152 X 89 X 16 (BS4-1) (S-275)

We incorporated the following loads in our calculations for Beam B-26.

Self-Weight: Auto incorporated by software using our steel sectional properties.

Factors used are;

Self-Weight = 1.0

Dead Load = 1.4

Live Load = 1.6

We had taken loadings being applied on our beam 'B-26':

- Cavity Wall Load

Our load derivation for each source for Beam B-26 is as follows;

Cavity Wall Load;

Dead Load: 4.4 kN/m^2

Wall height = 2 m

Dead Load (UDL) = 8.8 kN/m

Total Dead Load (UDL) = 8.8 KN/m

Beam, B-27:

Section UB 152 X 89 X 16 (BS4-1) (S-275)

We incorporated the following loads in our calculations for Beam B-27.

Self-Weight: Auto incorporated by software using our steel sectional properties.

Factors used are;

Self-Weight = 1.0

Dead Load = 1.4

Live Load = 1.6

We had taken loadings being applied on our beam 'B-27':

- Cavity Wall Load

Our load derivation for each source for Beam B-27 is as follows;

<u>Cavity Wall Load;</u>

Dead Load: 4.4 kN/m^2

Wall height = 2 m

Dead Load (UDL) = 8.8 kN/m

Total Dead Load (UDL) = 8.8 KN/m

<u>Beam, B-28:</u>

<u>Section UB 152 X 89 X 16 (BS4-1) (S-275)</u>

We incorporated the following loads in our calculations for Beam B-28.

Self-Weight: Auto incorporated by software using our steel sectional properties.

Factors used are;

Self-Weight = 1.0

Dead Load = 1.4

Live Load = 1.6

We had taken loadings being applied on our beam 'B-28':

- Cavity Wall Load

Our load derivation for each source for Beam B-28 is as follows;

<u>Cavity Wall Load;</u>

Dead Load: 4.4 kN/m^2

Wall height = 2 m

Dead Load (UDL) = 8.8 kN/m

Total Dead Load (UDL) = 8.8 KN/m

Beam, B-29:

Section UB 203 X 133 X 30 (BS4-1) (S-275)

We incorporated the following loads in our calculations for Beam B-29.

Self-Weight: Auto incorporated by software using our steel sectional properties.

Factors used are;

Self-Weight = 1.0

Dead Load = 1.4

Live Load = 1.6

We had taken loadings being applied on our beam 'B-29':

- Beam & Block Floor Load

Our load derivation for each source for Beam B-29 is as follows;

Beam & Block Floor Load;

Dead Load: 2.53 kN/m^2

Live Lead: 1.5 kN/m^2

Tributary Length = 0.9 m

Dead Load (UDL) = 2.53 x 0.9 = 2.275 kN/m

Live Load (UDL) = 1.5 x 0.9 = 1.35 kN/m

Total Dead Load (UDL) = 2.275 KN/m

Total Live Load (UDL) = 1.35 KN/m

Beam, B-30:

Section UB 203 X 133 X 30 (BS4-1) (S-275)

We incorporated the following loads in our calculations for Beam B-30.

Self-Weight: Auto incorporated by software using our steel sectional properties.

Factors used are;

Self-Weight = 1.0

Dead Load = 1.4

Live Load = 1.6

We had taken loadings being applied on our beam 'B-30':

- Beam & Block Floor Load

Our load derivation for each source for Beam B-30 is as follows;

Beam & Block Floor Load;

Dead Load: 2.53 kN/m^2

Live Lead: 1.5 kN/m^2

Tributary Length = 0.9 m

Dead Load (UDL) = 2.53 x 0.9 = 2.275 kN/m

Live Load (UDL) = 1.5 x 0.9 = 1.35 kN/m

Total Dead Load (UDL) = 2.275 KN/m

Total Live Load (UDL) = 1.35 KN/m

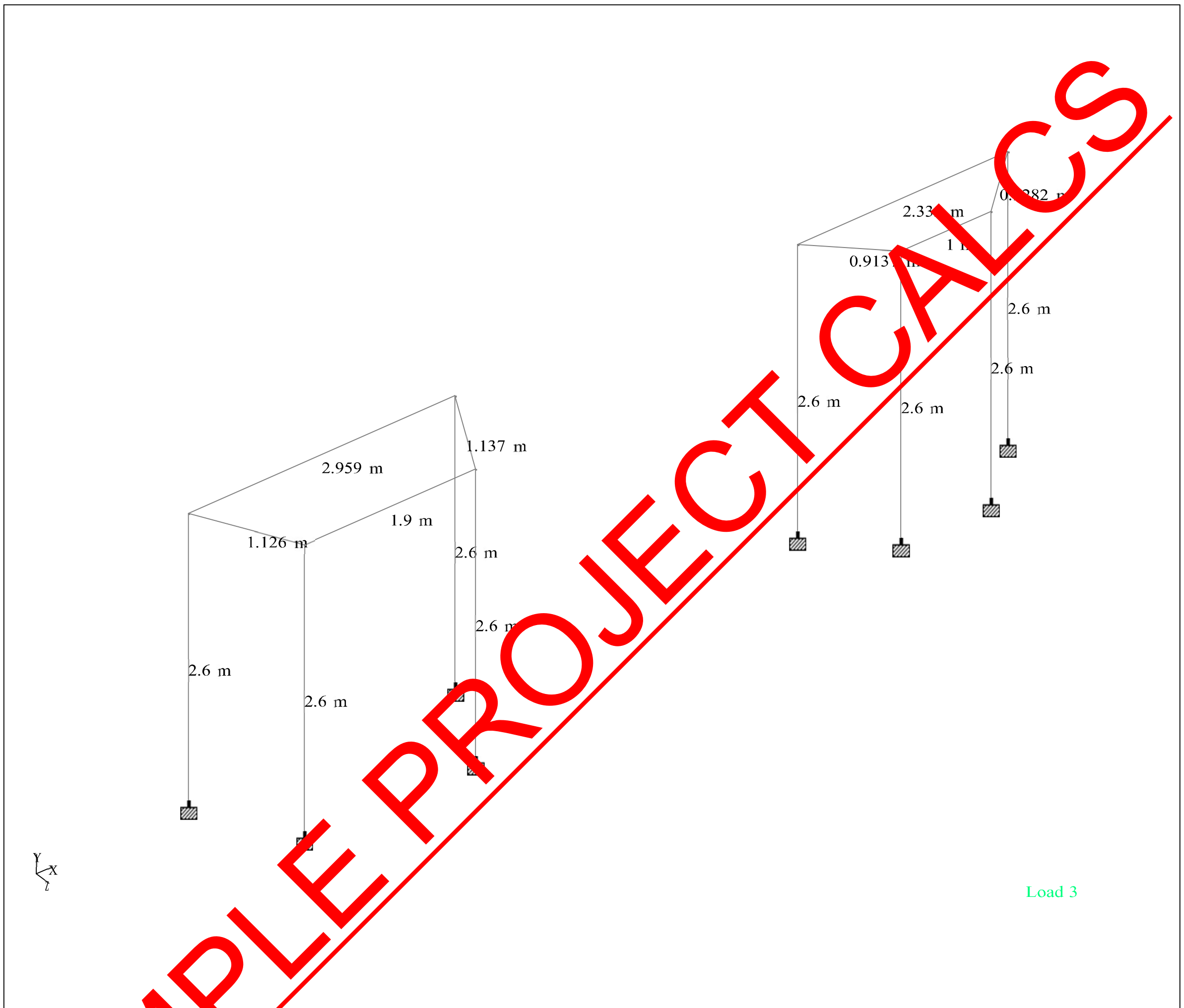

Whole Structure

PEPP PEARL ENGINEERS, PLANNERS & PROJECT MANAGERS 02 TOWERFIELDS WESTERHAM ROAD BROMLEY, BR2 6HF Email: info@Pearlepp.co.uk Website: www. pearlepp.co.uk Tel no. 02035763199	**Project:** 68 GROVE PARK RD UK		**Sheet No./Rev.** 112
	Job Ref. 2024-06-	**Structural Engineer** **MM**	**Date** **11/06/2024**

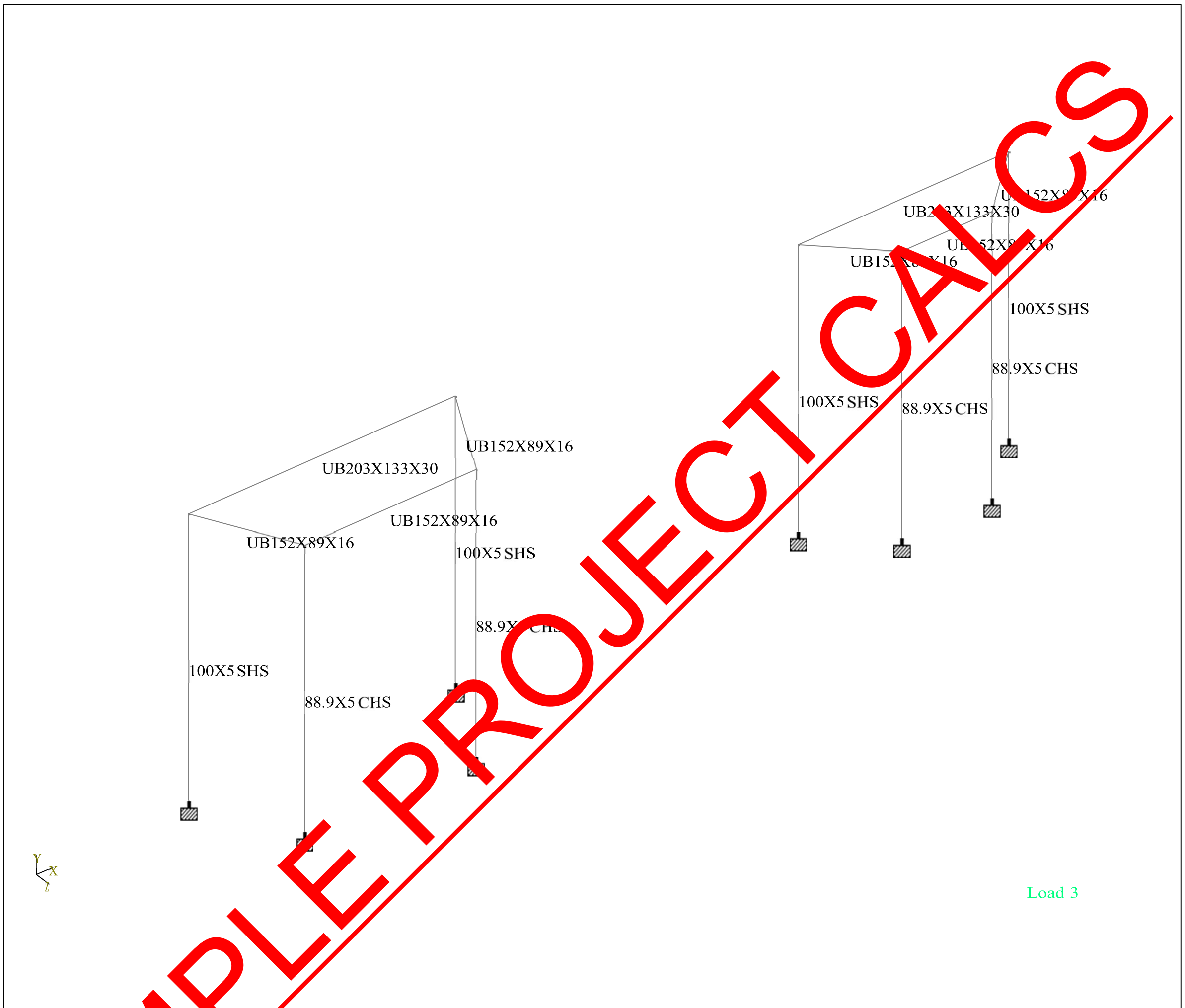

Whole Structure

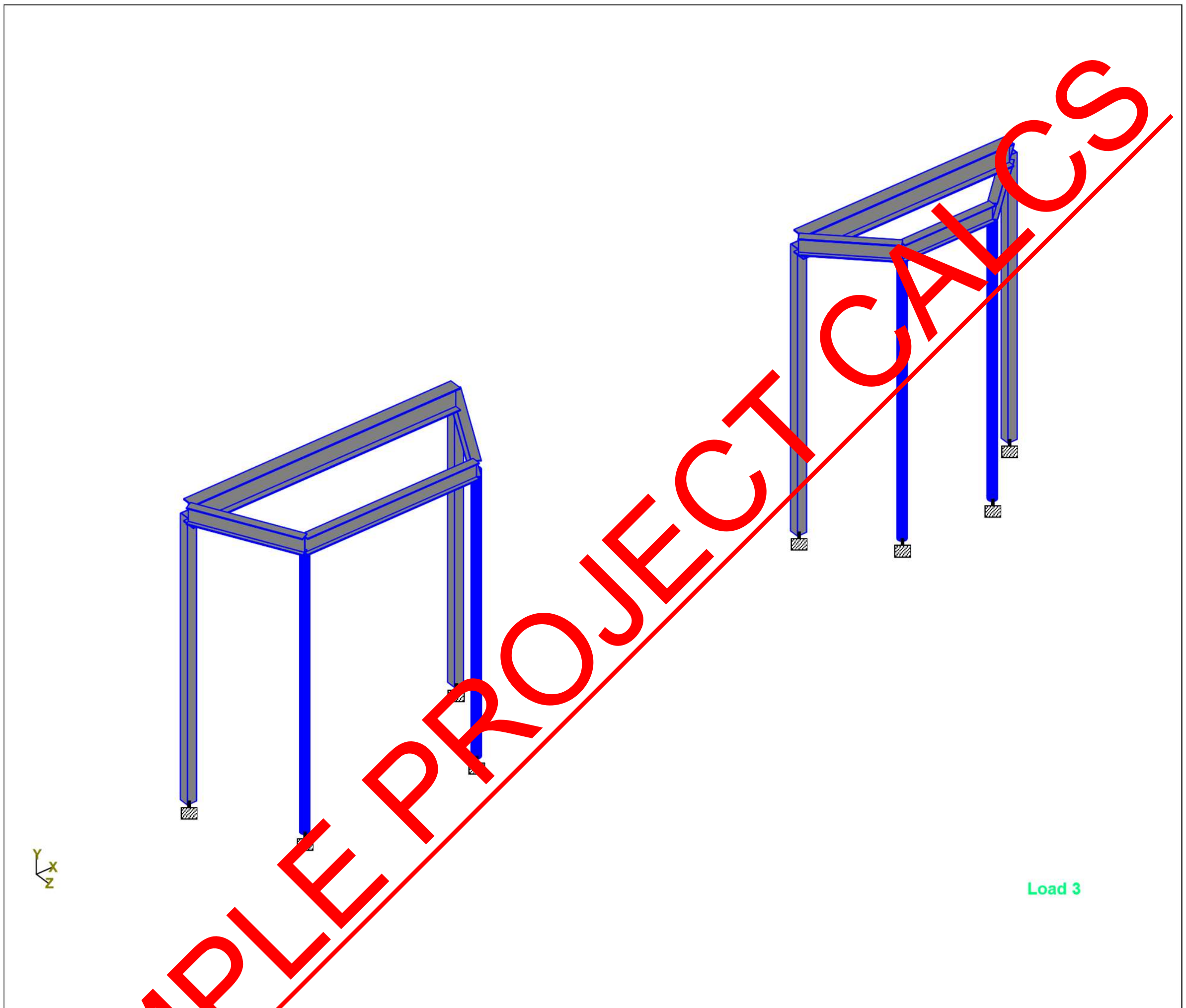

Whole Structure

Nodes

Node	X (m)	Y (m)	Z (m)
1	0	0	0
2	0	-2.600	0
3	2.959	0	0
4	2.959	-2.600	0
5	0.517	0	1.000
6	0.517	-2.600	1.000
7	2.417	0	1.000

8	2.417	-2.600	1.000
9	6.759	0	0
10	6.759	-2.600	0
11	7.415	0	0.636
12	7.415	-2.600	0.636
13	9.091	0	0
14	9.091	-2.600	0
15	8.415	0	0.636
16	8.415	-2.600	0.636

Beams

Beam	Node A	Node B	Length (m)	Property	□ (degrees)
1	1	5	1.126	1	0
2	5	7	1.900	1	0
3	7	3	1.137	1	0
4	7	8	2.600	4	0
5	5	6	2.600	4	0
6	2	1	2.600	3	0
7	3	4	2.600	3	0
8	1	3	2.959	2	0
9	10	9	2.600	[illegible]	0
10	11	9	0.914	1	0
11	11	12	2.600	4	0
12	11	15	[illegible]	1	0
13	15	16	[illegible]	4	0
14	14	13	2.600	3	0
15	13	15	[illegible]	1	0
16	9	13	2.332	2	0

Section Properties

Prop	Section	Area (cm^2)	I_{yy} (cm^4)	I_{zz} (cm^4)	J (cm^4)	Material
1	UB152X89X16	20.300	89.800	834.000	3.561	STEEL
2	UB203X133X30	38.200	385.000	2.9 E +3	10.305	STEEL
3	100x5SHS	18.700	279.000	279.000	428.687	STEEL
4	88.9x5CHS	13.200	116.000	116.000	232.748	STEEL
5	88.9X5CHS	13.200	116.000	116.000	232.748	STEEL
6	100X5SHS	18.700	279.000	279.000	428.687	STEEL

Materials

Mat	Name	E (kN/mm^2)	□	Density (kg/m^3)	□ (/°C)
1	CONCRETE	21.718	0.170	2.4 E +3	10 E -6

2	ALUMINUM	68.948	0.330	2.71 E +3	23 E -6
3	STEEL_50_KSI	199.948	0.300	7.83 E +3	11.7 E -6
4	STAINLESSSTEEL	197.930	0.300	7.83 E +3	18 E -6
5	STEEL_36_KSI	199.948	0.300	7.83 E +3	11.7 E -6
6	STEEL_275_NMM2	205.000	0.300	7.85 E +3	12 E -6
7	STEEL	205.000	0.300	7.83 E +3	12 E -6
8	STEEL_355_NMM2	205.000	0.300	7.85 E +3	12 E -6

Supports

Node	X (kN/mm)	Y (kN/mm)	Z (kN/mm)	rX (kN·m/deg)	rY (kN·m/deg)	rZ (kN·m/deg)
2	Fixed	Fixed	Fixed	Fixed	Fixed	Fixed
4	Fixed	Fixed	Fixed	Fixed	Fixed	Fixed
6	Fixed	Fixed	Fixed	Fixed	Fixed	Fixed
8	Fixed	Fixed	Fixed	Fixed	Fixed	Fixed
10	Fixed	Fixed	Fixed	Fixed	Fixed	Fixed
12	Fixed	Fixed	Fixed	Fixed	Fixed	Fixed
14	Fixed	Fixed	Fixed	Fixed	Fixed	Fixed
16	Fixed	Fixed	Fixed	Fixed	Fixed	Fixed

Releases

There is no data of this type.

Primary Load Cases

Number	Name	Type
1	DL	Dead
2	LL	Live

Combination Load Cases

Comb.	Combination L/C Name	Primary	Primary L/C Name	Factor
3	UNFACTORED	1	DL	1.00
		2	LL	1.00
4	FACTORED	1	DL	1.40
		2	LL	1.60

Load Generators

There is no data of this type.

1 DL : Beam Loads

Beam	Type		Direction	Fa	Da (m)	Fb	Db	Ecc. (m)
1	UNI	kN/m	GY	-8.800	-	-	-	-
2	UNI	kN/m	GY	-8.800	-	-	-	-
3	UNI	kN/m	GY	-8.800	-	-	-	-
8	UNI	kN/m	GY	-2.270	-	-	-	-
10	UNI	kN/m	GY	-8.800	-	-	-	-
12	UNI	kN/m	GY	-8.800	-	-	-	-
15	UNI	kN/m	GY	-8.800	-	-	-	-
16	UNI	kN/m	GY	-2.270	-	-	-	-

1 DL : Selfweight

Direction	Factor	Assigned Geometry
Y	-1.000	1 - 16

2 LL : Beam Loads

Beam	Type		Direction	Fa	Da (m)	Fb	Db	Ecc. (m)
8	UNI	kN/m	GY	-1.350	-	-	-	-
16	UNI	kN/m	GY	-1.350	-	-	-	-

Node Displacement Summary

	Node	L/C	X (mm)	Y (mm)	Z (mm)	Resultant (mm)	rX (rad)	rY (rad)	rZ (rad)
Max X	5	4:FACTORED	0.003	-0.185	-0.441	0.479	-0.001	0.000	-0.002
Min X	7	1:DL	-0.001	-0.133	-0.203	0.242	-0.001	0.000	0.001
Max Y	2	1:DL	0	0	0	0	0	0	0
Min Y	[illegible]	4:FACTORED	0.001	-0.186	-0.453	0.490	-0.001	0.000	0.002
Max Z	2	1:DL	0	0	0	0	0	0	0
Min Z	3	4:FACTORED	-0.000	-0.107	-0.453	0.466	-0.000	0.000	0.001
Max rX	1	1:DL	0.001	-0.061	-0.197	0.206	0.000	0.000	-0.000
Min rX	7	4:FACTORED	0.001	-0.186	-0.453	0.490	-0.001	0.000	0.002
Max rY	5	4:FACTORED	0.003	-0.185	-0.441	0.479	-0.001	0.000	-0.002
Min rY	13	1:DL	0.001	-0.049	-0.086	0.099	0.000	-0.000	0.000
Max rZ	7	4:FACTORED	0.001	-0.186	-0.453	0.490	-0.001	0.000	0.002
Min rZ	5	4:FACTORED	0.003	-0.185	-0.441	0.479	-0.001	0.000	-0.002
Max Rst	7	4:FACTORED	0.001	-0.186	-0.453	0.490	-0.001	0.000	0.002

Beam Displacement Detail Summary

Displacements shown in italic indicate the presence of an offset

	Beam	L/C	d (m)	X (mm)	Y (mm)	Z (mm)	Resultant (mm)
Max X	4	4:FACTORED	0.780	0.625	-0.130	0.097	0.646
Min X	5	4:FACTORED	0.780	-0.624	-0.129	0.087	0.643
Max Y	4	2:LL	2.340	0.000	0.000	-0.003	0.003
Min Y	2	4:FACTORED	0.950	0.002	-1.216	-0.448	1.296
Max Z	4	1:DL	1.040	0.438	-0.080	0.176	0.479
Min Z	3	4:FACTORED	0.114	0.001	-0.216	-0.454	0.502
Max Rst	2	4:FACTORED	0.950	0.002	-1.216	-0.448	1.296

Beam End Displacement Summary

Displacements shown in italic indicate the presence of an offset

	Beam	Node	L/C	X (mm)	Y (mm)	Z (mm)	Resultant (mm)
Max X	1	5	4:FACTORED	0.003	-0.185	-0.441	0.479
Min X	12	15	1:DL	-0.001	-0.[illegible]85	-0.087	0.121
Max Y	4	8	1:DL	0	0	0	0
Min Y	2	7	4:FACTORED	0.001	-0.1[illegible]6	-0.453	0.490
Max Z	4	8	1:DL	0	0	0	0
Min Z	3	3	4:FACTORED	-0.0[illegible]0	-0.107	-0.453	0.466
Max Rst	2	7	4:FACTORED	0.001	-0.186	-0.453	0.490

PEPP PEARL ENGINEERS, PLANNERS & PROJECT MANAGERS 02 TOWERFIELDS WESTERHAM ROAD BROMLEY, BR2 6HF Email: info@Pearlepp.co.uk Website: www. pearlepp.co.uk Tel no. 02035763199	**Project:** 68 GROVE PARK RD UK **Job Ref. 2024-06-** **Structural Engineer** **MM**	**Sheet No./Rev.** 118 **Date** **11/06/2024**

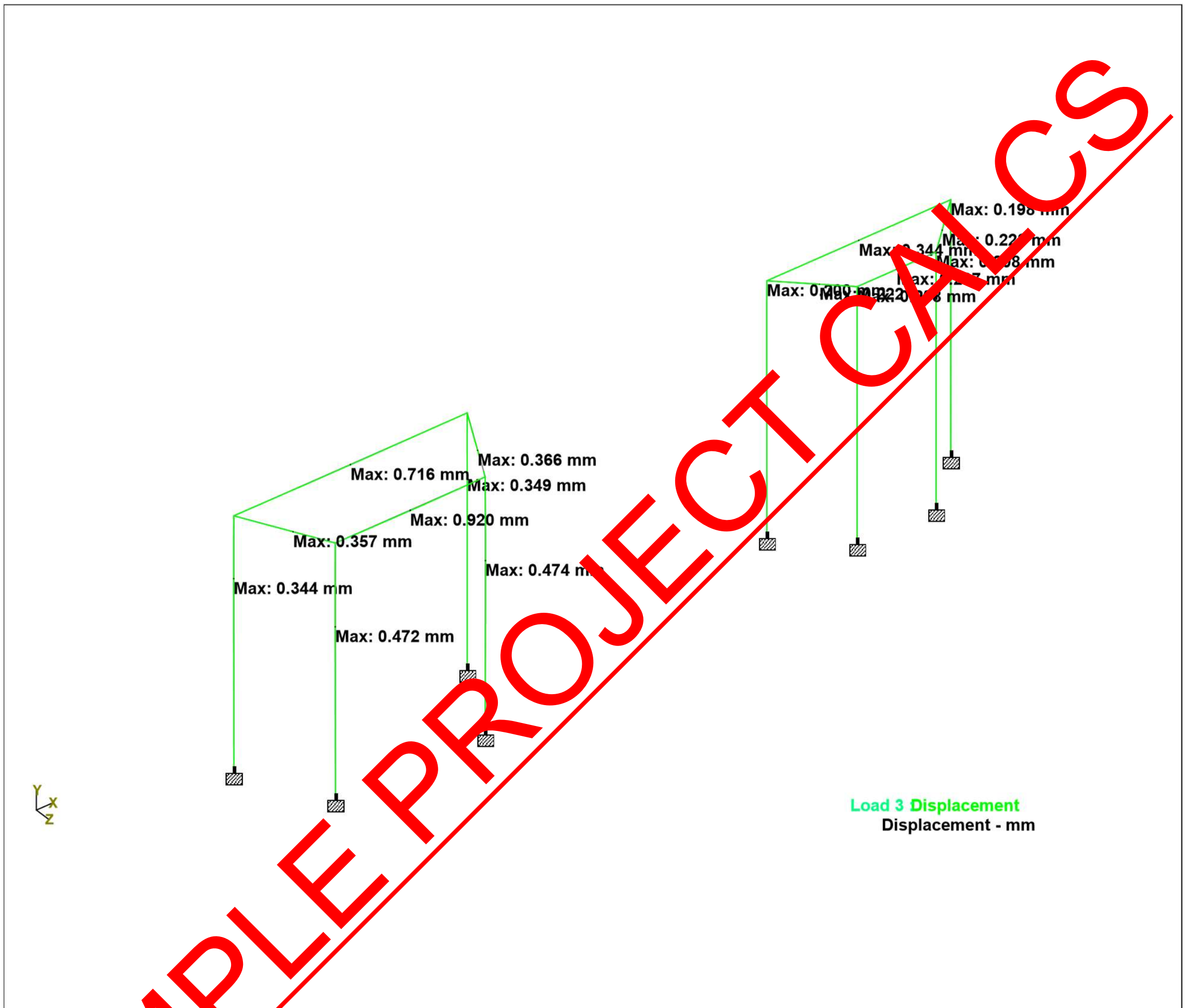

Whole Structure Displacements 100mm:1m 3 UNFACTORED

Beam End Force Summary

The signs of the forces at end B of each beam have been reversed. For example: this means that the Min Fx entry gives the largest tension value for an beam.

	Beam	Node	L/C	Axial	Shear		Torsion	Bending	
				Fx (kN)	Fy (kN)	Fz (kN)	Mx (kN·m)	My (kN·m)	Mz (kN·m)
Max Fx	4	8	4:FACTORED	19.534	0.347	0.178	-0.000	0.122	-0.300
Min Fx	15	13	2:LL	-0.015	-0.039	0.000	0.000	-0.000	-0.053
Max Fy	2	5	4:FACTORED	0.439	11.903	0.002	0.000	-0.002	0.776
Min Fy	2	7	4:FACTORED	0.439	-11.920	0.002	0.000	0.002	0.792

02 TOWERFIELDS WESTERHAM ROAD
BROMLEY, BR2 6HF
Email: info@Pearlepp.co.uk
Website: www. pearlepp.co.uk
Tel no. 02035763199

Max Fz	4	7	4:FACTORED	19.165	0.347	0.178	-0.000	-0.341	0.603
Min Fz	7	3	4:FACTORED	15.520	0.443	-0.175	-0.000	0.227	0.770
Max Mx	1	1	4:FACTORED	0.194	6.958	-0.003	0.003	0.001	0.256
Min Mx	3	7	4:FACTORED	0.198	7.245	-0.003	-0.00309	0.002	0.389
Max My	7	3	4:FACTORED	15.520	0.443	-0.175	-0.000	0.227	0.770
Min My	4	7	4:FACTORED	19.165	0.347	0.178	-0.000	-0.341	0.603
Max Mz	2	7	4:FACTORED	0.439	-11.920	0.002	0.000	0.002	0.792
Min Mz	5	5	4:FACTORED	19.060	-0.348	0.169	-0.000	-0.325	-0.604

Beam Force Detail Summary

Sign convention as diagrams:- positive above line, negative below line except Fx where positive is compression. Distance d is given from beam end A.

				Axial	Shear		Torsion	Bending	
	Beam	L/C	d (m)	Fx (kN)	Fy (kN)	Fz (kN)	Mx (kN·m)	My (kN·m)	Mz (kN·m)
Max Fx	4	4:FACTORED	2.600	19.534	0.347	0.178	-0.000	0.122	-0.300
Min Fx	15	2:LL	0	-0.015	-0.0[illegible]9	0.000	0.000	-0.000	-0.053
Max Fy	2	4:FACTORED	0	0.439	11.90[illegible]	0.002	0.000	-0.002	0.776
Min Fy	2	4:FACTORED	1.900	0.439	-11.920	0.002	0.000	0.002	0.792
Max Fz	4	4:FACTORED	0	19.165	0.347	0.178	-0.000	-0.341	0.603
Min Fz	7	4:FACTORED	0	15.520	0.443	-0.175	-0.000	0.227	0.770
Max Mx	1	4:FACTORED	0	0.194	6.958	-0.003	0.003	0.001	0.256
Min Mx	3	4:FACTORED	0	0.198	7.245	-0.003	-0.00309	0.002	0.389
Max My	7	4:FACTORED	0	15.520	0.443	-0.175	-0.000	0.227	0.770
Min My	4	4:FACTORED	0	19.165	0.347	0.178	-0.000	-0.341	0.603
Max Mz	2	4:FACTORED	1.900	0.439	-11.920	0.002	0.000	0.002	0.792
Min Mz	8	4:FACTORED	1.480	0.351	0.002	0.001	0.000	0.000	-5.646

PEPP PEARL ENGINEERS, PLANNERS & PROJECT MANAGERS 02 TOWERFIELDS WESTERHAM ROAD BROMLEY, BR2 6HF Email: info@Pearlepp.co.uk Website: www. pearlepp.co.uk Tel no. 02035763199	**Project:** 68 GROVE PARK RD UK		**Sheet No./Rev.** 120
	Job Ref. 2024-06-	**Structural Engineer** **MM**	**Date** **11/06/2024**

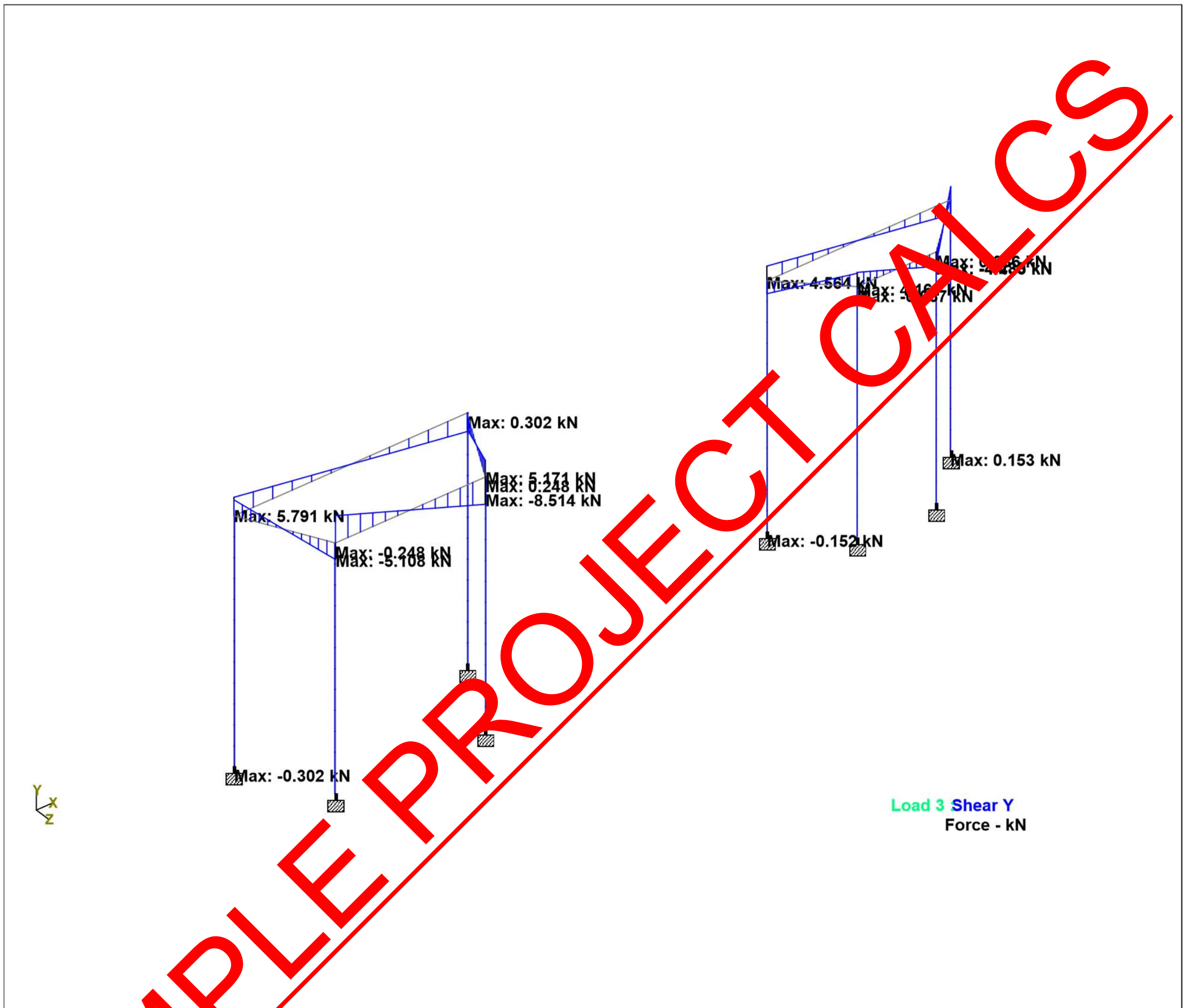

Whole Structure Fy 30kN:1m 3 UNFACTORED

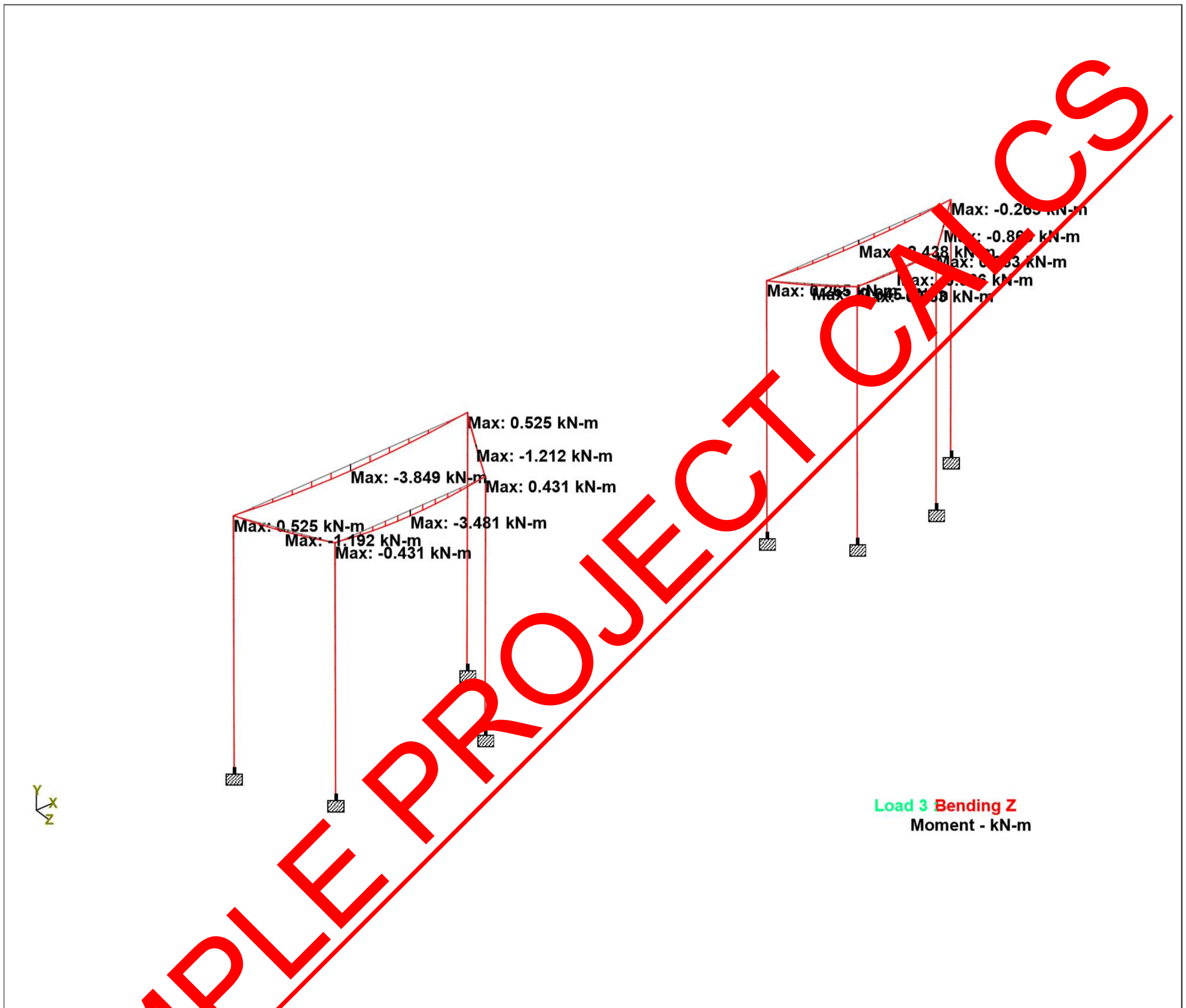

Whole Structure Mz 60kN-m:1m 3 UNFACTORED

Beam Combined Axial and Bending Stresses Summary

			Max Comp			Max Tens		
Beam	L/C	Length (m)	Stress (N/mm^2)	d (m)	Corner	Stress (N/mm^2)	d (m)	Corner
1	1:DL	1.126	10.705	0.563	1	-10.554	0.563	3
	2:LL	1.126	0.384	0	1	-0.397	0	3
	3:UNFACTORE	1.126	10.961	0.563	1	-10.823	0.563	3

	4:FACTORED	1.126	15.397	0.563	1	-15.206	0.563	3
2	1:DL	1.900	31.908	0.950	1	-31.592	0.950	3
	2:LL	1.900	0.059	0	1	-0.064	0	3
	3:UNFACTORE	1.900	31.961	0.950	1	-31.651	0.950	3
	4:FACTORED	1.900	44.756	0.950	1	-44.323	0.950	3
3	1:DL	1.137	10.881	0.569	1	-10.726	0.569	3
	2:LL	1.137	0.409	1.137	1	-0.422	1.137	3
	3:UNFACTORE	1.137	11.149	0.569	1	[illegible]	0.569	3
	4:FACTORED	1.137	15.662	0.569	1	[illegible]	0.569	3
4	1:DL	2.600	29.556	0		-8.860	0	
	2:LL	2.600	0.702	2.600		-0.663	2.600	
	3:UNFACTORE	2.600	29.365	0		-8.630	0	
	4:FACTORED	2.600	41.074	0		-12.037	0	
5	1:DL	2.600	[illegible]	0		-8.725	0	
	2:LL	2.600	0.686	2.600		-0.648	2.600	
	3:UNFACTORE	2.600	29.119	0		-8.497	0	
	4:FACTORED	2.600	40.730	0		-11.852	0	
6	1:DL	2.600	14.684	2.600	3	-5.280	2.600	1

Beam Combined Axial and Bending Stresses Summary Cont...

			Max Comp			Max Tens		
Beam	L/C	Length (m)	Stress (N/mm^2)	d (m)	Corner	Stress (N/mm^2)	d (m)	Corner
	2:LL	2.600	4.810	2.600	4	-2.701	2.600	2
	3:UNFACTORE	2.600	18.147	2.600	3	-6.633	2.600	1
	4:FACTORED	2.600	26.098	2.600	3	-9.557	2.600	1
7	1:DL	2.600	14.765	0	2	-5.319	0	1

02 TOWERFIELDS WESTERHAM ROAD
BROMLEY, BR2 6HF
Email: info@Pearlepp.co.uk
Website: www. pearlepp.co.uk
Tel no. 02035763199

	2:LL	2.600	4.830	0	3	-2.721	0	1
	3:UNFACTORE	2.600	18.193	0	3	-6.638	0	1
	4:FACTORED	2.600	26.155	0	3	-9.556	0	[illegible]
8	1:DL	2.959	9.181	1.480	1	-9.112	1.480	3
	2:LL	2.959	4.610	1.480	1	-4.555	1.480	3
	3:UNFACTORE	2.959	13.788	1.480	1	-13.665	1.480	3
	4:FACTORED	2.959	20.225	1.480	1	-20.041	1.480	3
9	1:DL	2.600	8.358	2.600	3	-0.816	2.600	1
	2:LL	2.600	2.955	2.600	4	-1.313	2.600	2
	3:UNFACTORE	2.600	10.050	2.600	3	-0.867	2.600	1
	4:FACTORED	2.600	14.409	2.600	3	-1.224	2.600	1
10	1:DL	0.914	7.458	0.457	1	-7.384	0.457	3
	2:LL	0.914	0.460	0.914	1	-0.475	0.914	3
	3:UNFACTORE	0.914	7.756	0.457	1	-7.697	0.457	3
	4:FACTORED	0.914	10.91[illegible]	0.457	1	-10.839	0.457	3
11	1:DL	2.600	10.860	0				
	2:LL	2.600	0.650	2.600		-0.592	2.600	
	3:UNFACTORE	2.600	10.569	0				
	4:FACTORED	2.600	14.741	0				
12	1:DL	1.000	8.771	0.500	1	-8.682	0.500	3
	2:LL	1.000	0.097	0	1	-0.107	0	3
	3:UNFACTORE	1.000	8.862	0.500	1	-8.783	0.500	3
	4:FACTORED	1.000	12.425	0.500	1	-12.316	0.500	3
13	1:DL	2.600	11.057	0				
	2:LL	2.600	0.653	2.600		-0.594	2.600	

02 TOWERFIELDS WESTERHAM ROAD
BROMLEY, BR2 6HF
Email: info@Pearlepp.co.uk
Website: www. pearlepp.co.uk
Tel no. 02035763199

	3:UNFACTORE	2.600	10.764	0				
	4:FACTORED	2.600	15.013	0				
14	1:DL	2.600	8.454	2.600	2	-0.851	2.600	4
	2:LL	2.600	2.963	2.600	1	-1.321	2.600	3
	3:UNFACTORE	2.600	10.132	2.600	2	-0.887	2.600	4
	4:FACTORED	2.600	14.520	2.600	2	-1.248	2.600	4
15	1:DL	0.928	7.660	0.464	1	-7.584	0.464	3
	2:LL	0.928	0.481	0	1	[illegible]	0	3
	3:UNFACTORE	0.928	7.968	0.464	1	-7.908	0.464	3
	4:FACTORED	0.928	11.217	0.464	1	-11.135	0.464	3
16	1:DL	2.332	5.870	1.166	1	-5.844	1.166	3
	2:LL	2.332	2.855	1.166	1	-2.825	1.166	3
	3:UNFACTORE	2.332	8.723	1.166	1	-8.666	1.166	3
	4:FACTORED	2.332	12.783	1.166	1	-12.697	1.166	3

Reaction Summary

			Horizontal	Vertical	Horizontal	Moment		
	Node	L/C	FX (kN)	FY (kN)	FZ (kN)	MX (kN·m)	MY (kN·m)	MZ (kN·m)
Max FX	2	4:FACTORED	0.442	15.988	0.173	0.223	-0.000	-0.381
Min FX	4	4:FACTORED	-0.443	16.043	0.175	0.227	-0.000	0.381
Max FY	8	4:FACTORED	-0.347	19.534	-0.178	-0.122	-0.000	0.300
Min FY	6	2:LL	0.001	0.025	0.012	0.017	-0.000	-0.000
Max FZ	4	4:FACTORED	-0.443	16.043	0.175	0.227	-0.000	0.381
Min FZ	8	4:FACTORED	-0.347	19.534	-0.178	-0.122	-0.000	0.300
Max MX	4	4:FACTORED	-0.443	16.043	0.175	0.227	-0.000	0.381
Min MX	8	4:FACTORED	-0.347	19.534	-0.178	-0.122	-0.000	0.300
Max MY	14	1:DL	-0.105	7.482	0.053	0.060	0.000	0.090
Min MY	2	4:FACTORED	0.442	15.988	0.173	0.223	-0.000	-0.381
Max MZ	4	4:FACTORED	-0.443	16.043	0.175	0.227	-0.000	0.381
Min MZ	2	4:FACTORED	0.442	15.988	0.173	0.223	-0.000	-0.381

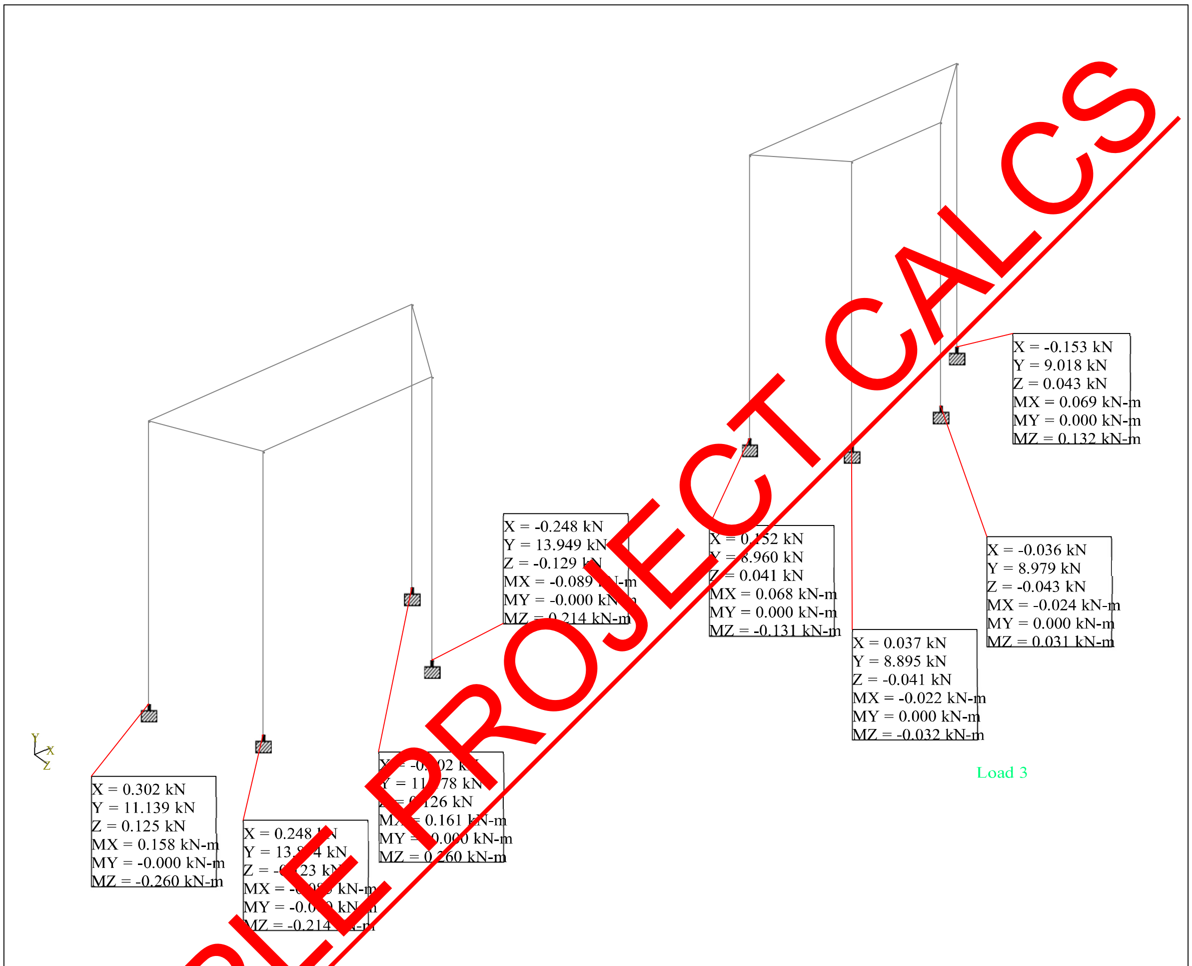

Whole Structure

Utilization Ratio

Beam	Analysis Property	Design Property	Actual Ratio	Allowable Ratio	Ratio (Act./Allow.)	Clause	L/C	Ax (cm^2)	Iz (cm^4)	Iy (cm^4)	Ix (cm^4)
1	UB152X89X1	UB152X89X1	0.063	1.000	0.063	BS-4.2.3-(Y)	4	20.300	834.000	89.800	3.561
2	UB152X89X1	UB152X89X1	0.202	1.000	0.202	BS-4.3.6	4	20.300	834.000	89.800	3.561
3	UB152X89X1	UB152X89X1	0.064	1.000	0.064	BS-4.2.3-(Y)	4	20.300	834.000	89.800	3.561
4	88.9x5CHS	88.9X5CHS	0.148	1.000	0.148	EC-6.3.3-662	4	13.200	116.000	116.000	232.000
5	88.9x5CHS	88.9X5CHS	0.147	1.000	0.147	EC-6.3.3-662	4	13.200	116.000	116.000	232.000
6	100x5SHS	100X5SHS	0.084	1.000	0.084	EC-6.3.3-662	4	18.700	279.000	279.000	439.000
7	100x5SHS	100X5SHS	0.084	1.000	0.084	EC-6.3.3-662	4	18.700	279.000	279.000	439.000
8	UB203X133X	UB203X133X	0.095	1.000	0.095	BS-4.3.6		38.200	2.9 E +3	385.000	10.305
9	100x5SHS	100X5SHS	0.052	1.000	0.052	EC-6.3.3-662	4	18.700	279.000	279.000	439.000
10	UB152X89X1	UB152X89X1	0.052	1.000	0.052	BS-4.2.3-(Y)	4	20.300	834.000	89.800	3.561
11	88.9x5CHS	88.9X5CHS	0.065	1.000	0.065	EC-6.3.3-662	4	13.200	116.000	116.000	232.000
12	UB152X89X1	UB152X89X1	0.055	1.000	0.055	BS-4.2.3-(Y)	4	20.300	834.000	89.800	3.561
13	88.9x5CHS	88.9X5CHS	0.066	1.000	0.066	EC-6.3.3-662	4	13.200	116.000	116.000	232.000
14	100x5SHS	100X5SHS	0.052	1.000	0.052	EC-6.3.3-662	4	18.700	279.000	279.000	439.000
15	UB152X89X1	UB152X89X1	052403	1.000	0.052403	BS-4.2.3-(Y)	4	20.300	834.000	89.800	3.561
16	UB203X133X	UB203X133X	051964	1.000	0.051964	BS-4.3.6	4	38.200	2.9 E +3	385.000	10.305

PEPP PEARL ENGINEERS, PLANNERS & PROJECT MANAGERS 02 TOWERFIELDS WESTERHAM ROAD BROMLEY, BR2 6HF Email: info@Pearlepp.co.uk Website: www. pearlepp.co.uk Tel no. 02035763199	**Project:** 68 GROVE PARK RD UK		**Sheet No./Rev.** 127
	Job Ref. 2024-06-	**Structural Engineer** **MM**	**Date** **11/06/2024**

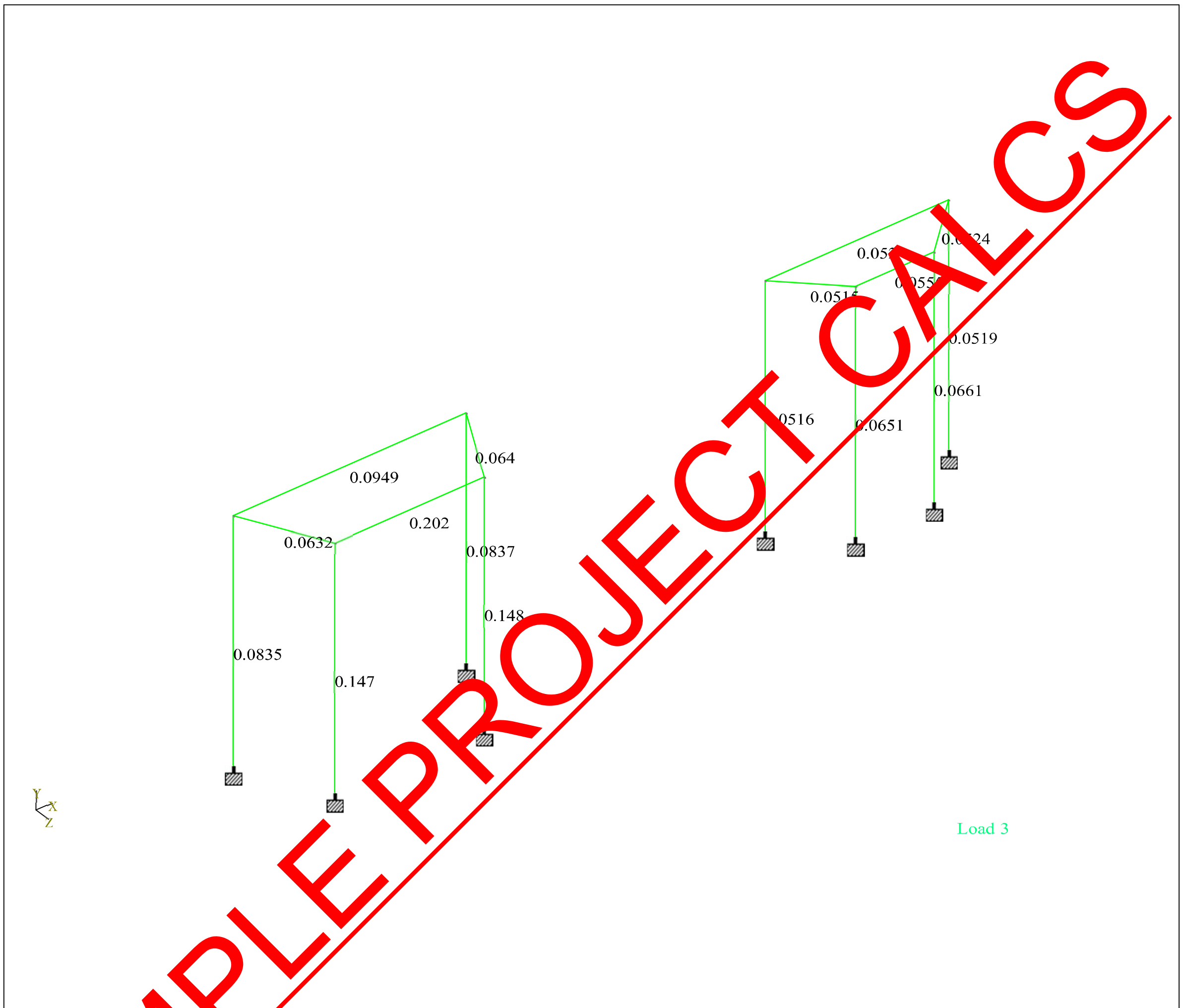

Whole Structure

3. CONNECTION DESIGN

- **Connection-1**

Project data

Project name	
Project number	
Author	
Description	
Date	
Design code	EN

Material

Steel	S 275

Project item CON1

Design

Name	CON1
Description	
Analysis	Stress, strain/ simplified loading

Beams and columns

Name	Cross-section	β – Direction [°]	γ - Pitch [°]	α - Rotation [°]	Offset ex [mm]	Offset ey [mm]	Offset ez [mm]	Forces in	X [mm]
C	3 - SHS100/100/10.0	0.0	90.0	0.0	70	0	0	Bolts	0
B	2 - UC 254 x 254 x 73	0.0	0.0	0.0	-150	0	0	Bolts	150

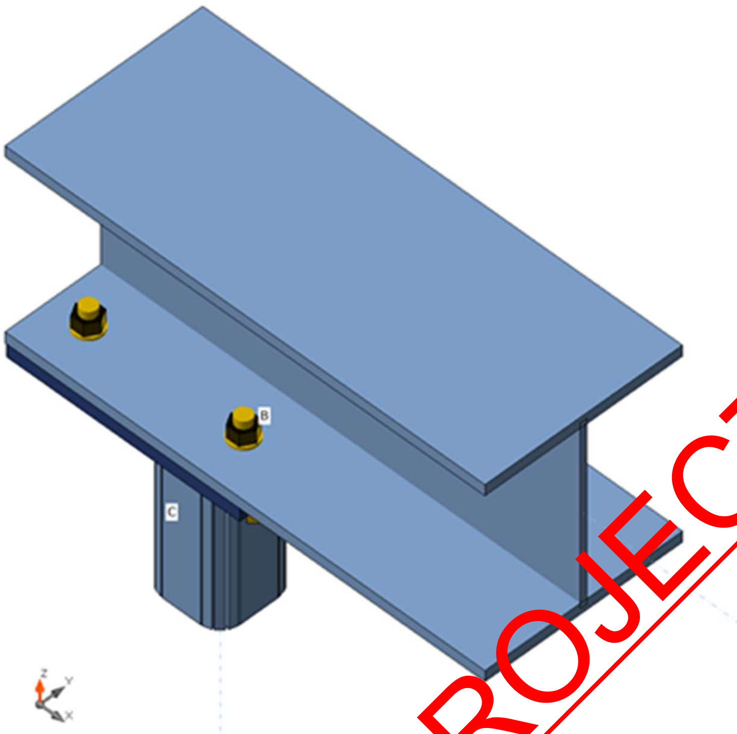

B
C

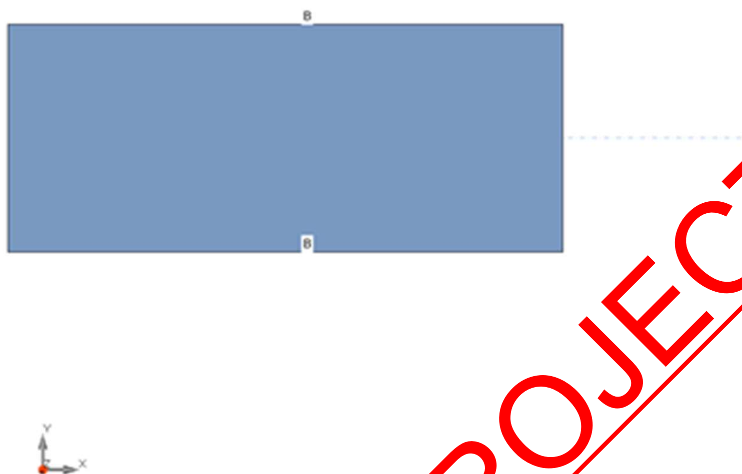

B
B
Y
X

PEPP PEARL ENGINEERS, PLANNERS & PROJECT MANAGERS	**Project:** 68 GROVE PARK RD UK		**Sheet No./Rev.** 131
02 TOWERFIELDS WESTERHAM ROAD BROMLEY, BR2 6HF Email: info@Pearlepp.co.uk Website: www. pearlepp.co.uk Tel no. 02035763199	**Job Ref. 2024-06-**	**Structural Engineer** **MM**	**Date** **11/06/2024**

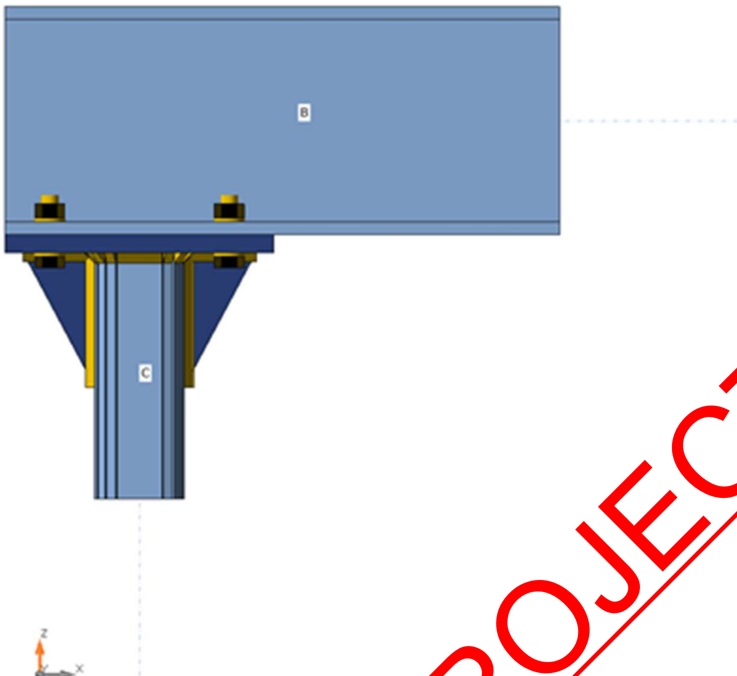

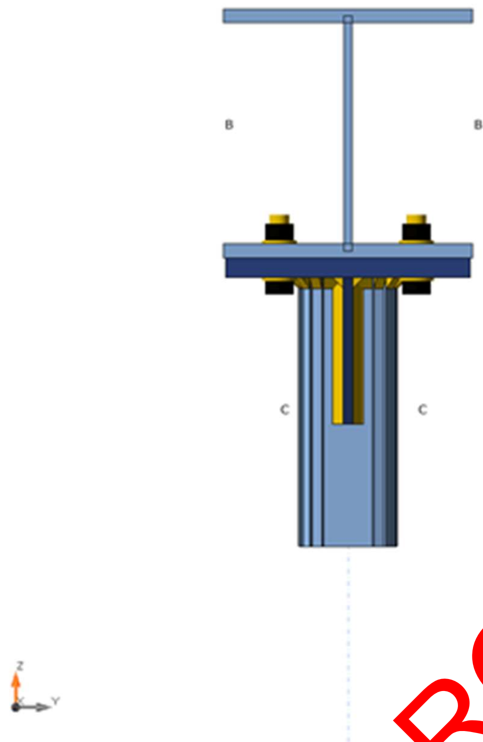

Cross-sections

Name	Material
3 - SHS100/100/10.0	S 275
2 - UC 254 x 254 x 73	S 275

Cross-sections

Name	Material	Drawing
3 - SHS100/100/10.0	S 275	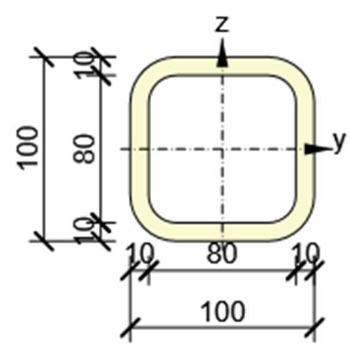

2 - UC 254 x 254 x 73	S 275	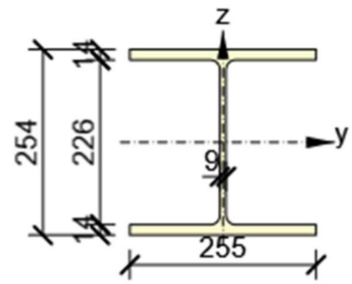

Bolts

Name	Bolt assembly	Diameter [mm]	fu [MPa]	Gross area [mm²]
M20 8.8	M20 8.8	20	800.0	314

Load effects (equilibrium not required)

Name	Member	N [kN]	Vy [kN]	Vz [kN]	Mx [kNm]	My [kNm]	Mz [kNm]
LE1	B	0.0	0.0	20.0	0.0	8.0	0.0

Check

Summary

Name	Value	Status
Analysis	100.0%	OK
Plates	0.0 < 5.0%	OK
Bolts	14.7 < 100%	OK
Welds	30.7 < 100%	OK
Buckling	83.04	
GMNA	Calculated	

Plates

Name	Thickness [mm]	Loads	σ_{Ed} [MPa]	ε_{Pl} [%]	σc_{Ed} [MPa]	Status
C	10.0	LE1	164.2	0.0	0.0	OK
B-bfl 1	14.2	LE1	104.0	0.0	8.0	OK
B-tfl 1	14.2	LE1	8.4	0.0	0.0	OK
B-w 1	8.6	LE1	45.3	0.0	0.0	OK

EP1	20.0	LE1	52.1	0.0	8.0	OK
RIB1	10.0	LE1	164.3	0.0	0.0	OK
RIB2	10.0	LE1	108.3	0.0	0.0	OK

Design data

Material	f_y [MPa]	ε_{lim} [%]
S 275	275.0	5.0

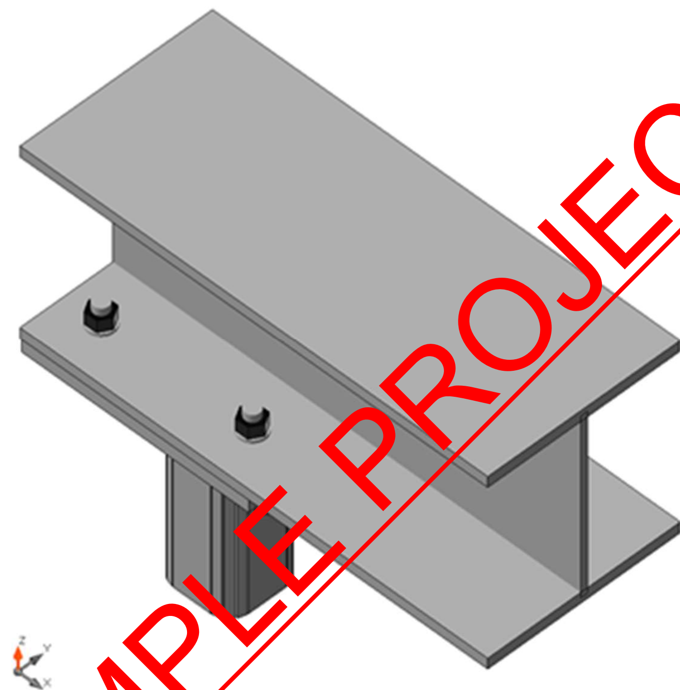

Overall check, LE1

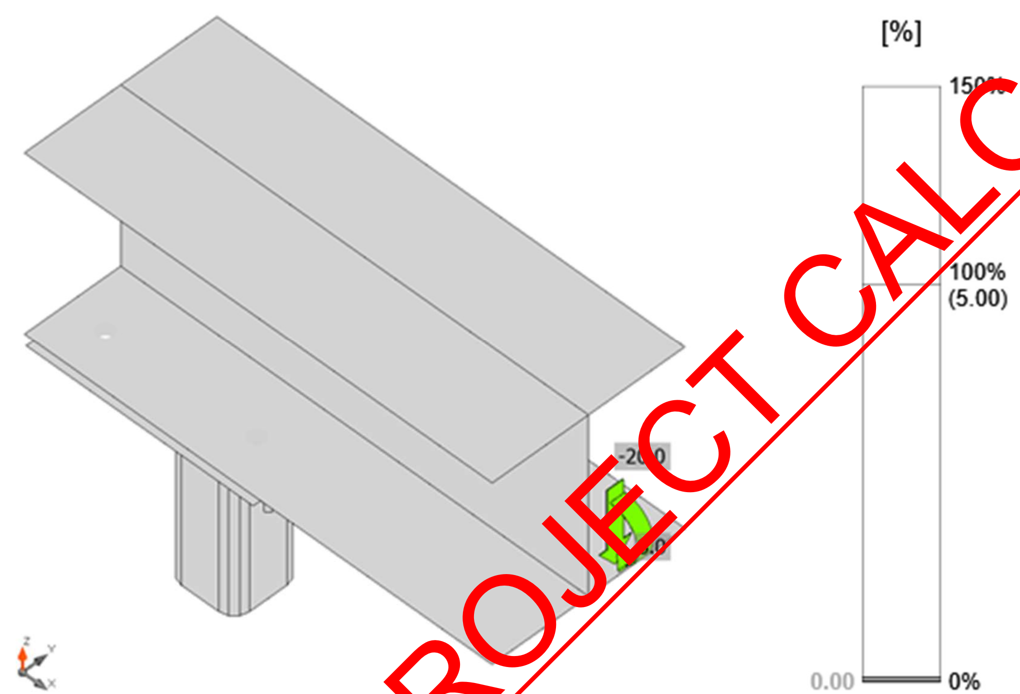

Strain check, LE1

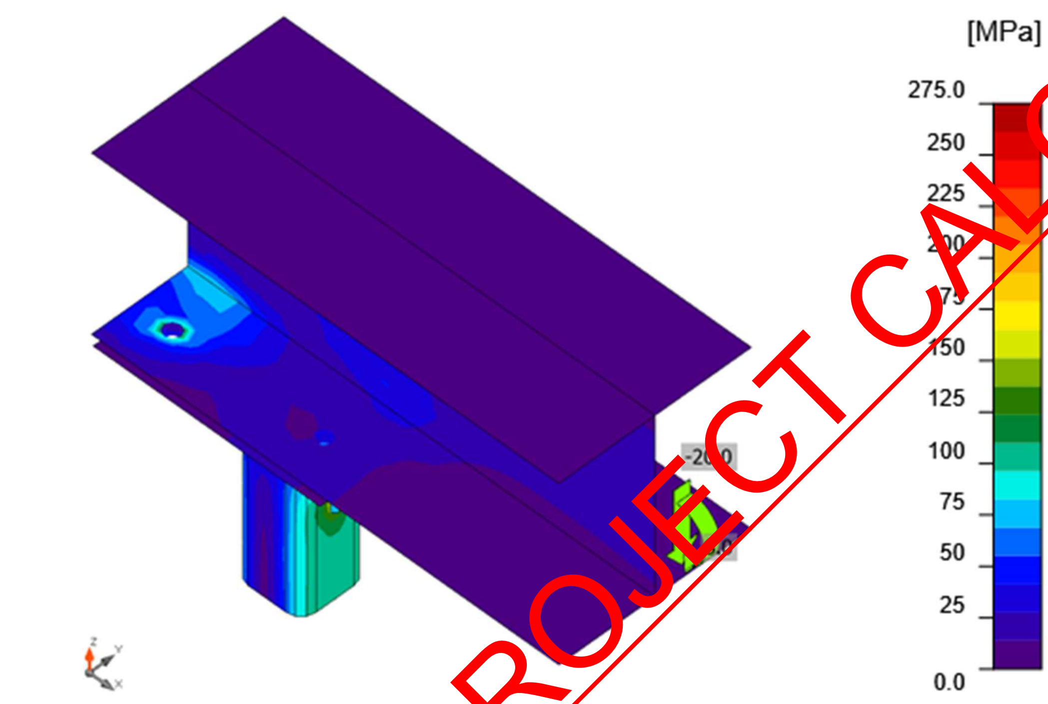

Equivalent stress, LE1

Bolts

	Name	Loads	$F_{t,Ed}$ [kN]	V [kN]	Ut_t [%]	$F_{b,Rd}$ [kN]	Ut_s [%]	Ut_{ts} [%]	Status
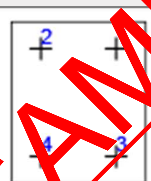	B1	LE1	1.0	0.6	0.7	244.2	0.6	1.1	OK
	B2	LE1	1.0	0.6	0.7	244.2	0.6	1.1	OK
	B3	LE1	20.8	0.8	14.7	194.2	0.8	11.4	OK
	B4	LE1	20.8	0.8	14.7	194.2	0.9	11.4	OK

Design data

Name	$F_{t,Rd}$ [kN]	$B_{p,Rd}$ [kN]	$F_{v,Rd}$ [kN]
M20 8.8 - 1	141.1	290.0	94.1

Detailed result for B3

Tension resistance check (EN 1993-1-8 tab 3.4)

$F_{t,Rd} = \frac{k_2 f_{ub} A_s}{\gamma_{M2}} =$ 141.1 kN ≥ $F_t =$ 20.8 kN

where:

$k_2 = 0.90$ – Factor

$f_{ub} =$ 800.0 MPa – Ultimate tensile strength of the bolt

$A_s =$ 245 mm^2 – Tensile stress area of the bolt

$\gamma_{M2} = 1.25$ – Safety factor

Punching resistance check (EN 1993-1-8 tab 3.4)

$B_{p,Rd} = \frac{0.6 \pi d_m t_p f_u}{\gamma_{M2}} =$ 290.0 kN ≥ $F_t =$ 20.8 kN

where:

$d_m =$ 32 mm – The mean of the across points and across flats dimensions of the bolt head or the nut, whichever is smaller

$t_p =$ 14 mm – Thickness

$f_u =$ 430.0 MPa – Ultimate strength

$\gamma_{M2} = 1.25$ – Safety factor

Shear resistance check (EN 1993-1-8 tab 3.4)

$F_{v,Rd} = \frac{\beta_p \alpha_v f_{ub} A}{\gamma_{M2}} =$ 94.1 kN ≥ $V =$ 0.8 kN

where:

$\beta_p = 1.00$ – Reducing factor

$\alpha_v = 0.60$ – Reducing factor

$f_{ub} =$ 800.0 MPa – Ultimate tensile strength of the bolt

$A =$ 245 mm^2 – Tensile stress area of the bolt

$\gamma_{M2} = 1.25$ – Safety factor

Bearing resistance check (EN 1993-1-8 tab 3.4)

$F_{b,Rd} = \frac{k_1 \alpha_b f_u d t}{\gamma_{M2}} =$ 194.2 kN ≥ $V =$ 0.8 kN

where:

$k_1 = \min(2.8\frac{e_2}{d_0} - 1.7, 1.4\frac{p_2}{d_0} - 1.7, 2.5) = 2.50$ – Factor for edge distance and bolt spacing perpendicular to the direction of load transfer

$\alpha_b = \min(\frac{e_1}{3d_0}, \frac{p_1}{3d_0} - \frac{1}{4}, \frac{f_{ub}}{f_u}, 1) = 0.80$ – Factor for end distance and bolt spacing in direction of load transfer

$e_2 =$ 50 mm – Distance to the plate edge perpendicular to the shear force

$p_2 = \infty$ mm – Distance between bolts perpendicular to the shear force

$d_0 = 22$ mm – Bolt hole diameter

$e_1 = 52$ mm – Distance to the plate edge in the direction of the shear force

$p_1 = \infty$ mm – Distance between bolts in the direction of the shear force

$f_{ub} = 800.0$ MPa – Ultimate tensile strength of the bolt

$f_u = 430.0$ MPa – Ultimate strength

$d = 20$ mm – Nominal diameter of the fastener

$t = 14$ mm – Thickness of the plate

$\gamma_{M2} = 1.25$ – Safety factor

Interaction of tension and shear (EN 1993-1-8 tab 3.4)

$$U_{tts} = \frac{F_{v,Ed}}{F_{v,Rd}} + \frac{F_{t,Ed}}{1.4F_{t,Rd}} = \quad 11.4 \quad \%$$

Utilization in tension

$$U_{tt} = \frac{F_{t,Ed}}{\min(F_{t,Rd};B_{p,Rd})} = \quad 14.7 \quad \%$$

Utilization in shear

$$U_{ts} = \frac{V_{Ed}}{\min(F_{v,Rd};F_{b,Rd})} = \quad 0.8 \quad \%$$

Welds (Plastic redistribution)

Item	Edge	Throat th [mm]	Length [mm]	Loads	$\sigma_{w,Ed}$ [MPa]	ε_{Pl} [%]	$\sigma_\perp$ [MPa]	$\tau_{\|\|}$ [MPa]	$\tau_\perp$ [MPa]	Ut [%]	Ut_c [%]	Status
EP1	C	◢8.5	324	LE1	58.7	0.0	6.7	-33.0	-6.8	14.5	10.9	OK
EP1	RIB1	◢7.5 ◣	80	LE1	124.3	0.0	-48.1	44.9	-48.6	30.7	15.6	OK
		◢7.5 ◣	80	LE1	123.9	0.0	-48.5	-44.9	48.2	30.6	15.6	OK
C-w 2	RIB1	◢7.5 ◣	150	LE1	79.4	0.0	-6.2	-45.3	-6.2	19.6	9.1	OK
		◢7.5 ◣	150	LE1	79.4	0.0	-6.2	45.3	6.2	19.6	9.1	OK
EP1	RIB2	◢7.5 ◣	80	LE1	46.2	0.0	18.4	-16.1	18.4	11.4	6.9	OK
		◢7.5 ◣	80	LE1	46.6	0.0	18.4	16.5	-18.4	11.5	6.9	OK
C-w 1	RIB2	◢7.5 ◣	150	LE1	55.5	0.0	3.9	31.7	4.1	13.7	4.4	OK

		◢7.5 ◣	150	LE1	55.7	0.0	4.0	-31.8	-3.9	13.8	4.4	OK

Design data

	β_w [-]	$\sigma_{w,Rd}$ [MPa]	0.9 σ [MPa]
S 275	0.85	404.7	309.6

Detailed result for EP1 RIB1

Weld resistance check (EN 1993-1-8 4.5.3.2)

$\sigma_{w,Rd} = f_u/(\beta_w \gamma_{M2}) =$ 404.7 MPa ≥ $\sigma_{w,Ed} = [\sigma_\perp^2 + 3(\tau_\perp^2 + \tau_\parallel^2)]^{0.5} =$ 124.3 MPa

$\sigma_{\perp,Rd} = 0.9 f_u/\gamma_{M2} =$ 309.6 MPa ≥ $|\sigma_\perp| =$ 48.1 MPa

where:

$f_u =$ 430.0 MPa – Ultimate strength

$\beta_w =$ 0.85 – appropriate correlation factor taken from Table 4.1

$\gamma_{M2} =$ 1.25 – Safety factor

Stress utilization

$U_t = \max(\frac{\sigma_{w,Ed}}{\sigma_{w,Rd}}; \frac{|\sigma_\perp|}{\sigma_{\perp,Rd}}) =$ 30.7 %

Buckling

Loads	Shape	Factor [-]
LE1	1	83.04
	2	96.39
	3	123.20
	4	132.00
	5	155.81
	6	156.92

Bill of material

Manufacturing operations

Name	Plates [mm]	Shape	Nr.	Welds [mm]	Length [mm]	Bolts	Nr.

EP1	P20.0x250.0-300.0 (S 275)		1	Fillet: a = 8.5	324.2	M20 8.8	4
RIB1	P10.0x80.0-150.0 (S 275)		1	Double fillet: a = 7.5	230.0		
RIB2	P10.0x80.0-150.0 (S 275)		1	Double fillet: a = 7.5	230.0		

Welds

Type	Material	Throat thickness [mm]	Leg size [mm]	Length [mm]
Fillet	S 275	8.5	12.0	324.2
Double fillet	S 275	7.5	10.6	460.0

Bolts

Name	Grip length [mm]	Count
M20 8.8	34	4

Drawing

EP1

P20.0x300-250 (S 275)

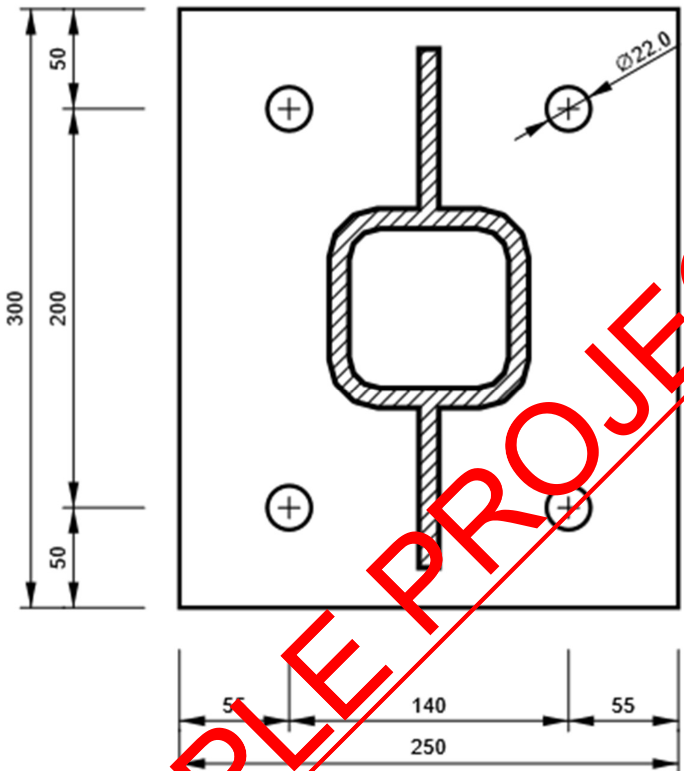

RIB1

P10.0x150-80 (S 275)

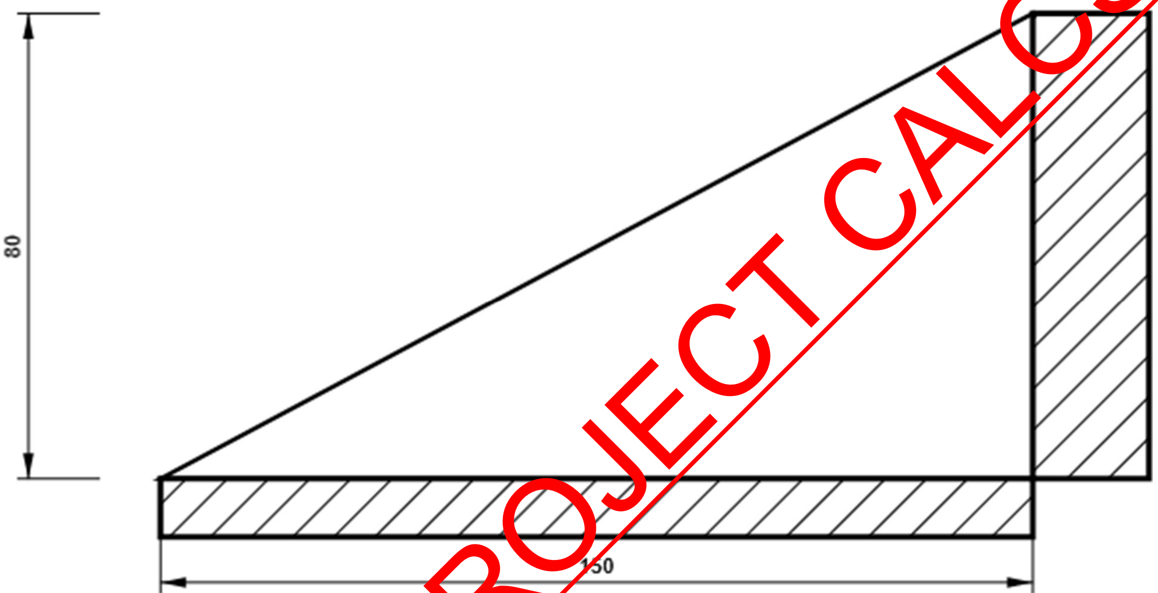

RIB2

P10.0x150-80 (S 275)

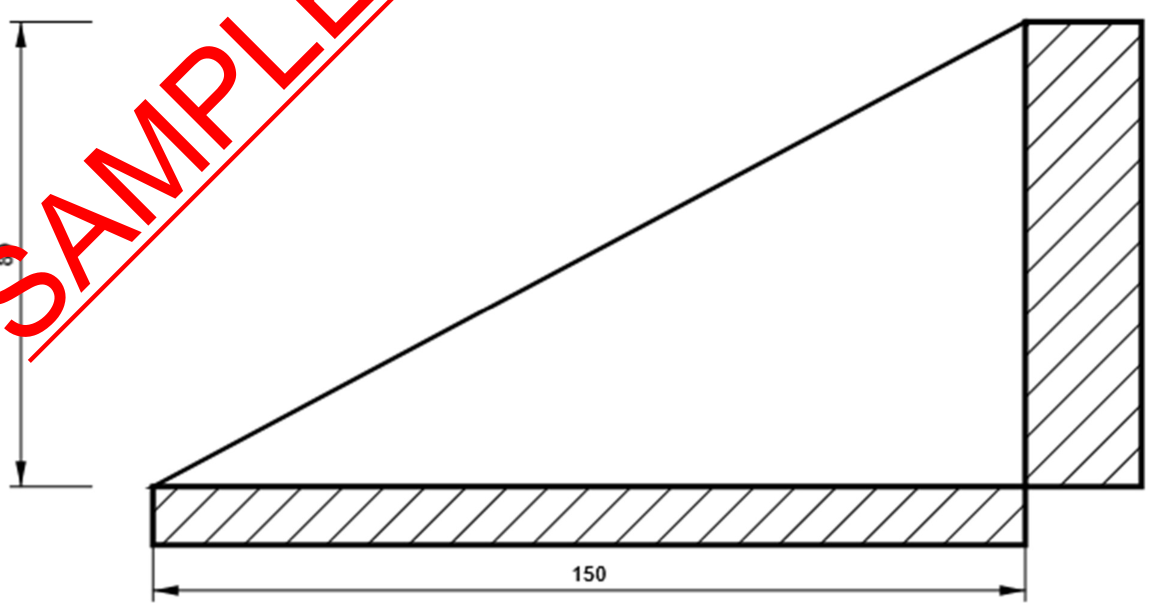

PEPP PEARL ENGINEERS, PLANNERS & PROJECT MANAGERS 02 TOWERFIELDS WESTERHAM ROAD BROMLEY, BR2 6HF Email: info@Pearlepp.co.uk Website: www. pearlepp.co.uk Tel no. 02035763199	**Project:** 68 GROVE PARK RD UK		**Sheet No./Rev.** 143
	Job Ref. 2024-06-	**Structural Engineer** **MM**	**Date** **11/06/2024**

B, UC 254 x 254 x 73 - Bottom flange 1:

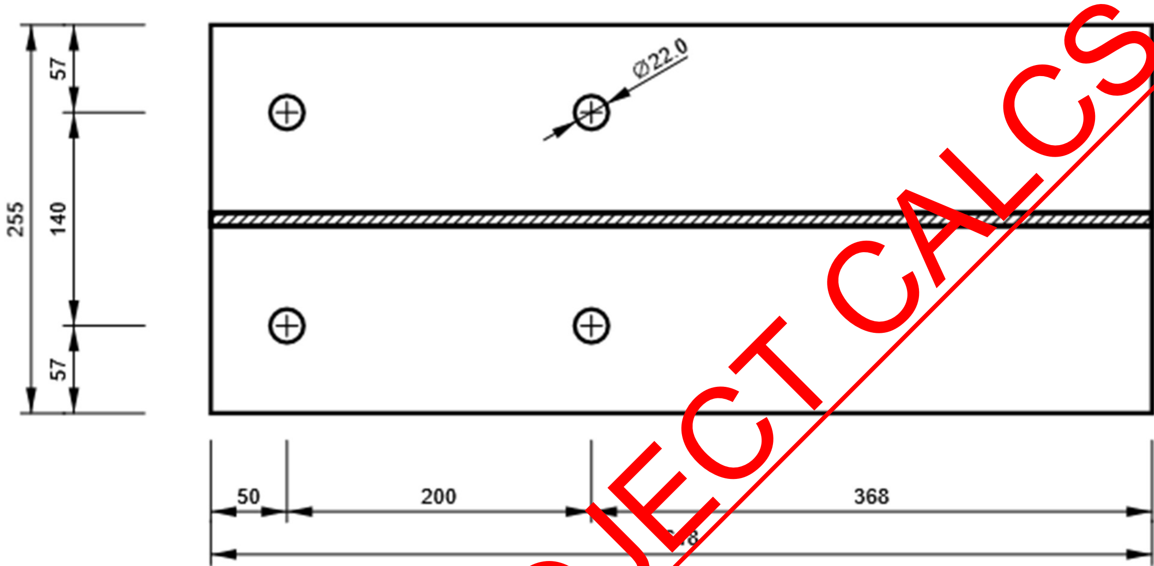

- **Connection-2**

Project data

Project name
Project number
Author
Description
Date
Design code EN

Material

Steel S 275

Project item CON2

Design

Name CON2
Description
Analysis Stress, strain/ simplified loading

Beams and columns

Name	Cross-section	β – Direction [°]	γ - Pitch [°]	α - Rotation [°]	Offset ex [mm]	Offset ey [mm]	Offset ez [mm]	Forces in	X [mm]
C	3 - SHS100/100/10.0	0.0	90.0	0.0	70	0	0	Bolts	0
B	2 - UC 254 x 254 x 89	0.0	0.0	0.0	-150	0	0	Bolts	150

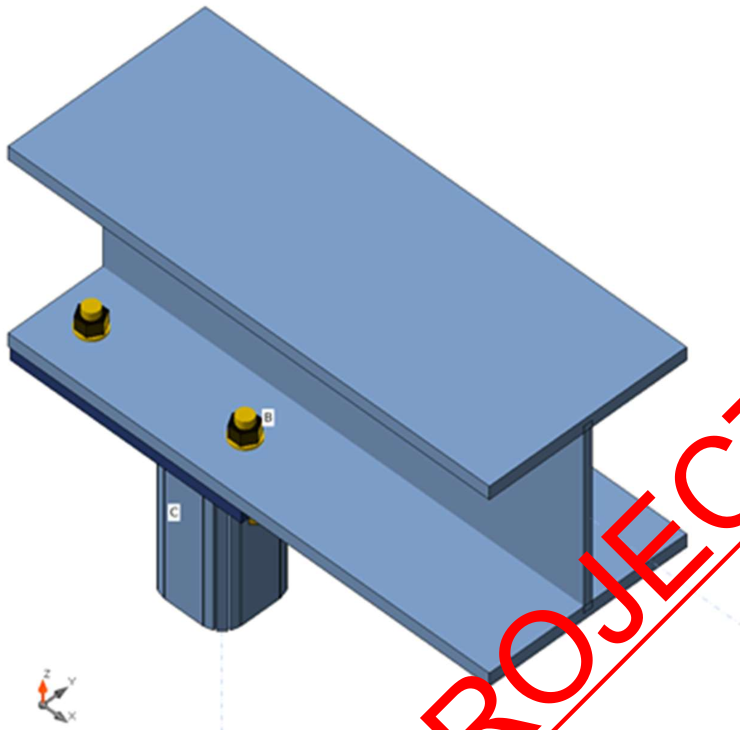

B
C
Z
Y
X

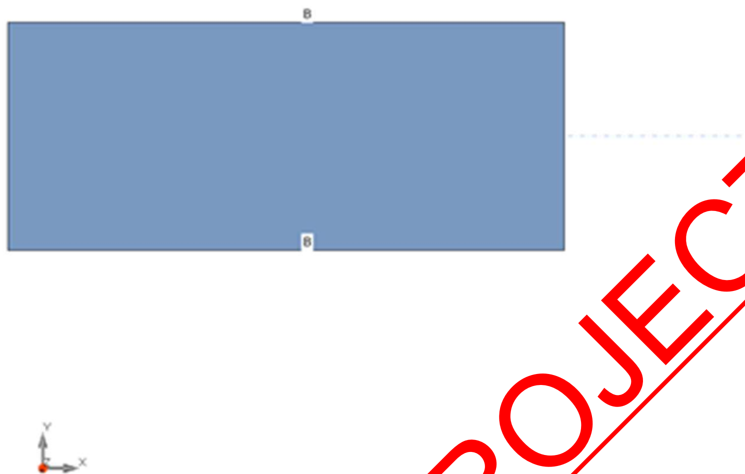

B
B

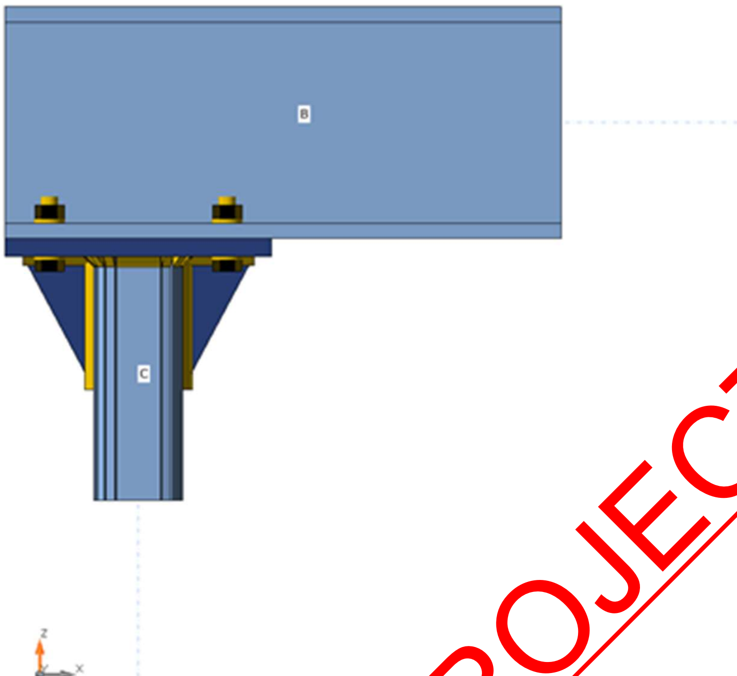
B
C
z
x

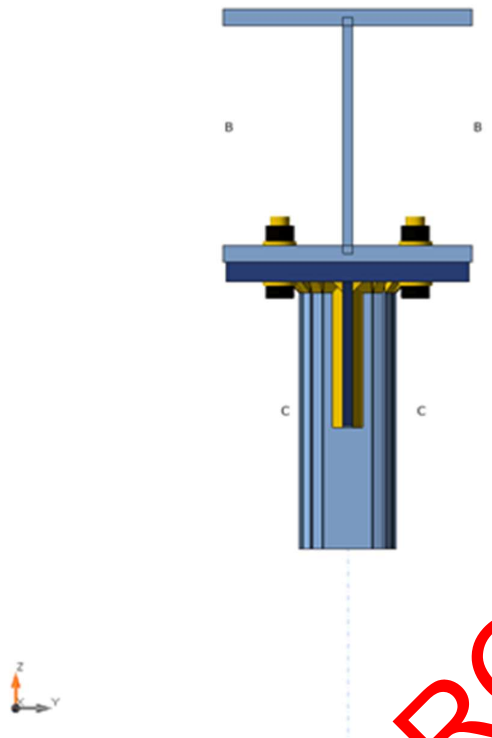

Cross-sections

Name	Material
3 - SHS100/100/10.0	S 275
2 - UC 254 x 254 x 89	S 275

Cross-sections

Name	Material	Drawing
3 - SHS100/100/10.0	S 275	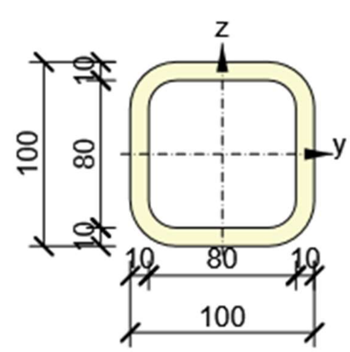

2 - UC 254 x 254 x 89	S 275	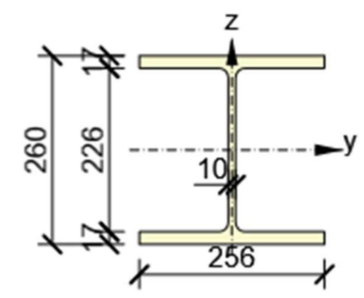

Bolts

Name	Bolt assembly	Diameter [mm]	fu [MPa]	Gross area [mm²]
M20 8.8	M20 8.8	20	800.0	314

Load effects (equilibrium not required)

Name	Member	N [kN]	Vy [kN]	Vz [kN]	Mx [kNm]	My [kNm]	Mz [kNm]
LE1	B	0.0	0.0	32.0	0.0	12.0	0.0

Check

Summary

Name	Value	Status
Analysis	100.0%	OK
Plates	0.0 < 5.0%	OK
Bolts	20.6 < 100%	OK
Welds	41.1 < 100%	OK
Buckling	68.37	
GMNA	Calculated	

Plates

Name	Material	Thickness [mm]	Loads	σ_{Ed} [MPa]	ε_{Pl} [%]	σc_{Ed} [MPa]	Status
C	S 275	10.0	LE1	246.4	0.0	0.0	OK
B-bfl 1	S 275	17.3	LE1	114.2	0.0	10.6	OK
B-tfl 1	S 275	17.3	LE1	10.6	0.0	0.0	OK
B-w 1	S 275	10.3	LE1	55.4	0.0	0.0	OK

EP1	S 275	20.0	LE1	81.0	0.0	10.6	OK
RIB1	S 355	10.0	LE1	240.6	0.0	0.0	OK
RIB2	S 355	10.0	LE1	163.3	0.0	0.0	OK

Design data

Material	f_y [MPa]	ε_{lim} [%]
S 275	275.0	5.0
S 355	355.0	5.0

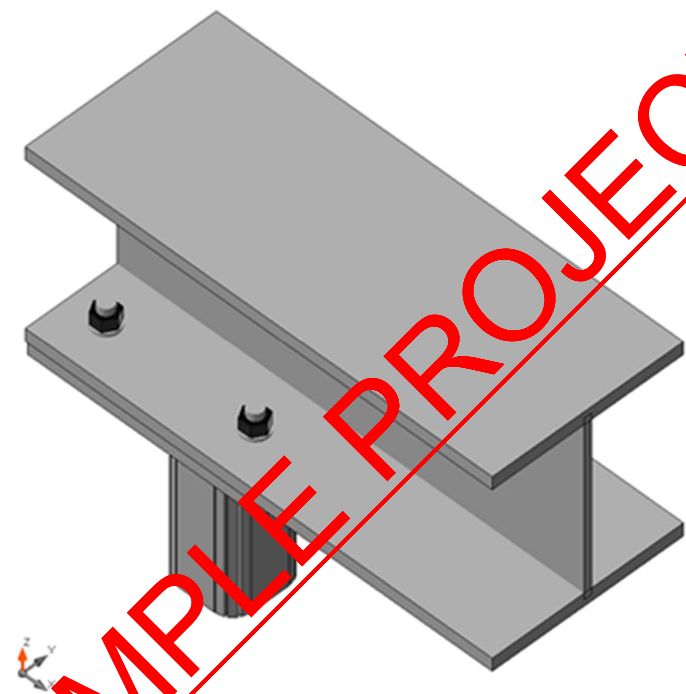

Overall check, LE1

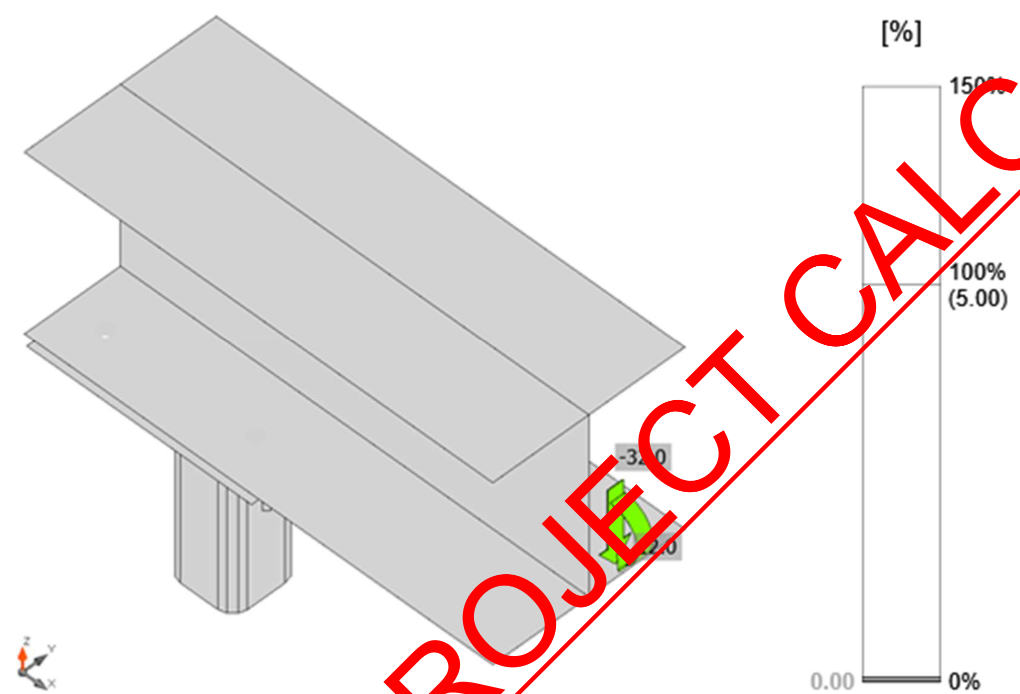

Strain check, LE1

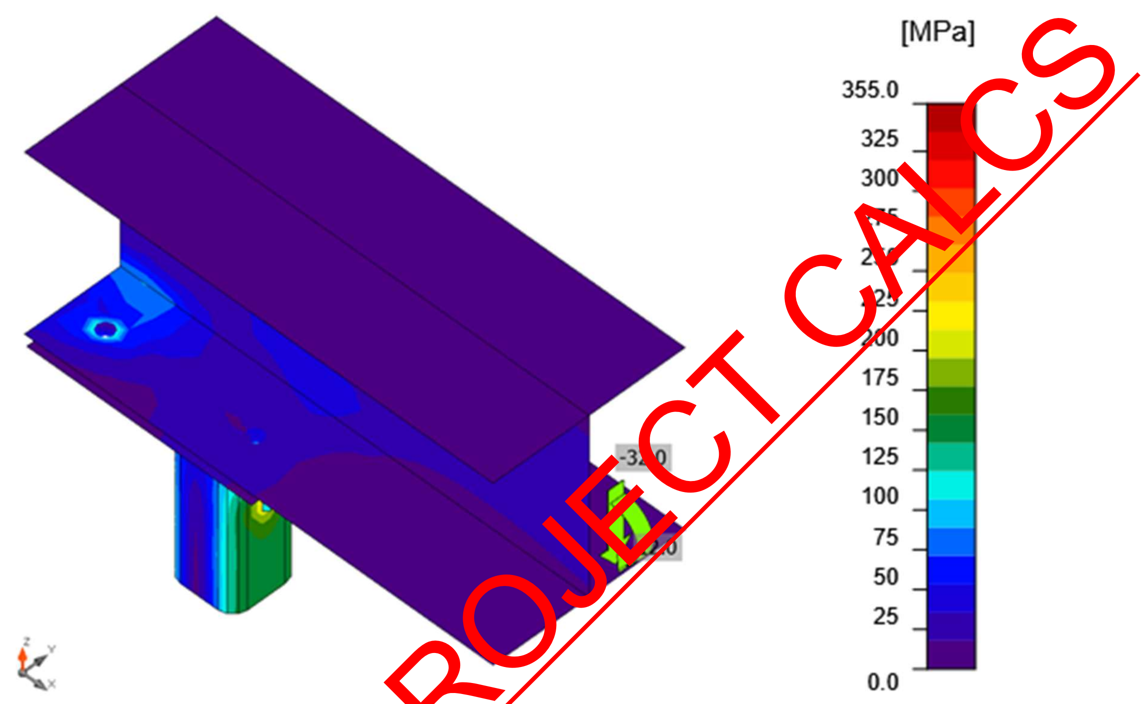

Equivalent stress, LE1

Bolts

	Name	Loads	$F_{t,Ed}$ [kN]	V [kN]	Ut_t [%]	$F_{b,Rd}$ [kN]	Ut_s [%]	Ut_{ts} [%]	Status
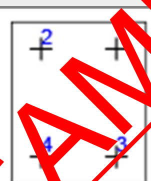	B1	LE1	1.1	0.8	0.8	297.6	0.8	1.4	OK
	B2	LE1	1.1	0.8	0.8	297.6	0.8	1.4	OK
	B3	LE1	29.0	0.9	20.5	225.4	1.0	15.6	OK
	B4	LE1	29.0	0.9	20.6	225.4	1.0	15.6	OK

Design data

Name	$F_{t,Rd}$ [kN]	$B_{p,Rd}$ [kN]	$F_{v,Rd}$ [kN]
M20 8.8 - 1	141.1	353.4	94.1

Detailed result for B4

Tension resistance check (EN 1993-1-8 tab 3.4)

$F_{t,Rd} = \frac{k_2 f_{ub} A_s}{\gamma_{M2}} =$ 141.1 kN ≥ $F_t =$ 29.0 kN

where:

$k_2 =$ 0.90 – Factor

$f_{ub} =$ 800.0 MPa – Ultimate tensile strength of the bolt

$A_s =$ 245 mm^2 – Tensile stress area of the bolt

$\gamma_{M2} =$ 1.25 – Safety factor

Punching resistance check (EN 1993-1-8 tab 3.4)

$B_{p,Rd} = \frac{0.6\pi d_m t_p f_u}{\gamma_{M2}} =$ 353.4 kN ≥ $F_t =$ 29.0 kN

where:

$d_m =$ 32 mm – The mean of the across points and across flats dimensions of the bolt head or the nut, whichever is smaller

$t_p =$ 17 mm – Thickness

$f_u =$ 430.0 MPa – Ultimate strength

$\gamma_{M2} =$ 1.25 – Safety factor

Shear resistance check (EN 1993-1-8 tab 3.4)

$F_{v,Rd} = \frac{\beta_p \alpha_v f_{ub} A}{\gamma_{M2}} =$ 94.1 kN ≥ $V =$ 0.9 kN

where:

$\beta_p =$ 1.00 – Reducing factor

$\alpha_v =$ 0.60 – Reducing factor

$f_{ub} =$ 800.0 MPa – Ultimate tensile strength of the bolt

$A =$ 245 mm^2 – Tensile stress area of the bolt

$\gamma_{M2} =$ 1.25 – Safety factor

Bearing resistance check (EN 1993-1-8 tab 3.4)

$F_{b,Rd} = \frac{k_1 \alpha_b f_u d t}{\gamma_{M2}} =$ 225.4 kN ≥ $V =$ 0.9 kN

where:

$k_1 = \min(2.8\frac{e_2}{d_0} - 1.7, 1.4\frac{p_2}{d_0} - 1.7, 2.5) =$ 2.50 – Factor for edge distance and bolt spacing perpendicular to the direction of load transfer

$\alpha_b = \min(\frac{e_1}{3d_0}, \frac{p_1}{3d_0} - \frac{1}{4}, \frac{f_{ub}}{f_u}, 1) =$ 0.76 – Factor for end distance and bolt spacing in direction of load transfer

$e_2 =$ 50 mm – Distance to the plate edge perpendicular to the shear force

$p_2 = \infty$ mm – Distance between bolts perpendicular to the shear force

$d_0 = 22$ mm – Bolt hole diameter

$e_1 = 50$ mm – Distance to the plate edge in the direction of the shear force

$p_1 = \infty$ mm – Distance between bolts in the direction of the shear force

$f_{ub} = 800.0$ MPa – Ultimate tensile strength of the bolt

$f_u = 430.0$ MPa – Ultimate strength

$d = 20$ mm – Nominal diameter of the fastener

$t = 17$ mm – Thickness of the plate

$\gamma_{M2} = 1.25$ – Safety factor

Interaction of tension and shear (EN 1993-1-8 tab 3.4)

$$U_{tts} = \frac{F_{v,Ed}}{F_{v,Rd}} + \frac{F_{t,Ed}}{1.4F_{t,Rd}} = \quad 15.6 \quad \%$$

Utilization in tension

$$U_{tt} = \frac{F_{t,Ed}}{\min(F_{t,Rd}; B_{p,Rd})} = \quad 20.6 \quad \%$$

Utilization in shear

$$U_{ts} = \frac{V_{Ed}}{\min(F_{v,Rd}; F_{b,Rd})} = \quad 1.0 \quad \%$$

Welds (Plastic redistribution)

Item	Edge	Throat th [mm]	Length [mm]	Loads	$\sigma_{w,Ed}$ [MPa]	ε_{Pl} [%]	$\sigma_\perp$ [MPa]	$\tau_\parallel$ [MPa]	$\tau_\perp$ [MPa]	Ut [%]	Ut_c [%]	Status
EP1	C	◢8.5	324	LE1	86.3	0.0	9.5	-48.6	-9.4	21.3	16.5	OK
EP1	RIB1	◢7.5◣	80	LE1	166.2	0.0	-65.5	58.7	-65.9	41.1	21.9	OK
		◢7.5◣	80	LE1	165.9	0.0	-65.8	-58.6	65.6	41.0	21.9	OK
C-w 2	RIB1	◢7.5◣	150	LE1	116.2	0.0	-9.1	-66.2	-9.1	28.7	13.1	OK
		◢7.5◣	150	LE1	116.2	0.0	-9.1	66.2	9.1	28.7	13.1	OK
EP1	RIB2	◢7.5◣	80	LE1	71.4	0.0	28.4	-25.0	28.4	17.6	10.6	OK
		◢7.5◣	80	LE1	72.0	0.0	28.4	25.5	-28.4	17.8	10.6	OK
C-w 1	RIB2	◢7.5◣	150	LE1	83.4	0.0	6.0	47.7	6.0	20.6	6.7	OK

		◢7.5 ◣	150	LE1	83.4	0.0	6.0	-47.6	-6.0	20.6	6.7	OK

Design data

	β_w [-]	$\sigma_{w,Rd}$ [MPa]	0.9 σ [MPa]
S 275	0.85	404.7	309.6

Detailed result for EP1 RIB1

Weld resistance check (EN 1993-1-8 4.5.3.2)

$\sigma_{w,Rd} = f_u/(\beta_w \gamma_{M2}) =$ 404.7 MPa ≥ $\sigma_{w,Ed} = [\sigma_{\perp}^2 + 3(\tau_{\perp}^2 + \tau_{\parallel}^2)]^{0.5} =$ 166.2 MPa

$\sigma_{\perp,Rd} = 0.9 f_u/\gamma_{M2} =$ 309.6 MPa ≥ $|\sigma_{\perp}| =$ 65.5 MPa

where:

$f_u =$ 430.0 MPa – Ultimate strength

$\beta_w =$ 0.85 – appropriate correlation factor taken from Table 4.1

$\gamma_{M2} =$ 1.25 – Safety factor

Stress utilization

$U_t = \max(\frac{\sigma_{w,Ed}}{\sigma_{w,Rd}}; \frac{|\sigma_{\perp}|}{\sigma_{\perp,Rd}}) =$ 41.1 %

Buckling

Loads	Shape	Factor [-]
LE1	1	68.37
	2	86.88
	3	92.34
	4	103.35
	5	104.10
	6	131.79

Bill of material

Manufacturing operations

Name	Plates [mm]	Shape	Nr.	Welds [mm]	Length [mm]	Bolts	Nr.

PEPP
PEARL ENGINEERS, PLANNERS & PROJECT MANAGERS
02 TOWERFIELDS WESTERHAM ROAD
BROMLEY, BR2 6HF
Email: info@Pearlepp.co.uk
Website: www. pearlepp.co.uk
Tel no. 02035763199

EP1	P20.0x250.0-300.0 (S 275)		1	Fillet: a = 8.5	324.2	M20 8.8	4
RIB1	P10.0x80.0-150.0 (S 275)		1	Double fillet: a = 7.5	230.0		
RIB2	P10.0x80.0-150.0 (S 275)		1	Double fillet: a = 7.5	230.0		

Welds

Type	Material	Throat thickness [mm]	Leg size [mm]	Length [mm]
Fillet	S 275	8.5	12.0	324.2
Double fillet	S 275	7.5	10.6	460.0

Bolts

Name	Grip length [mm]	Count
M20 8.8	37	4

Drawing

EP1

P20.0x300-250 (S 275)

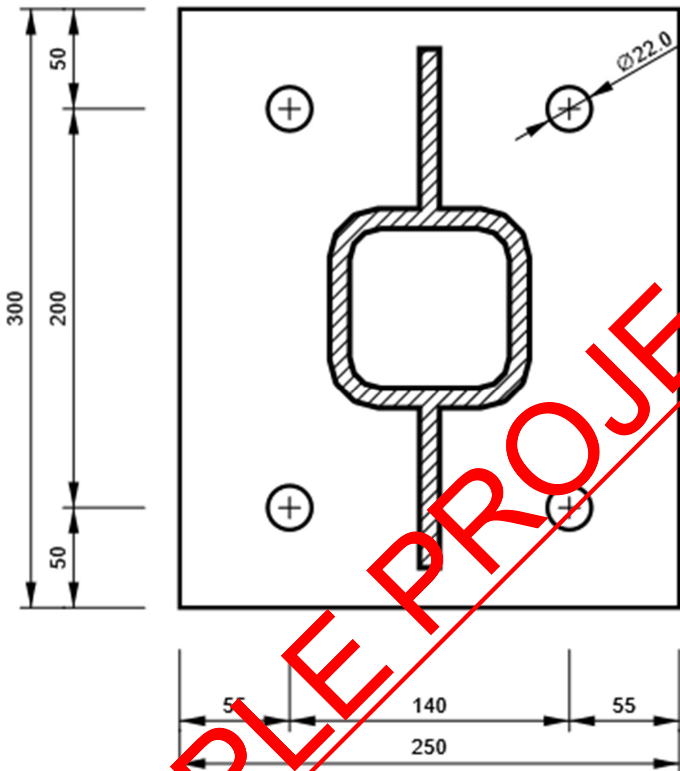

RIB1

P10.0x150-80 (S 355)

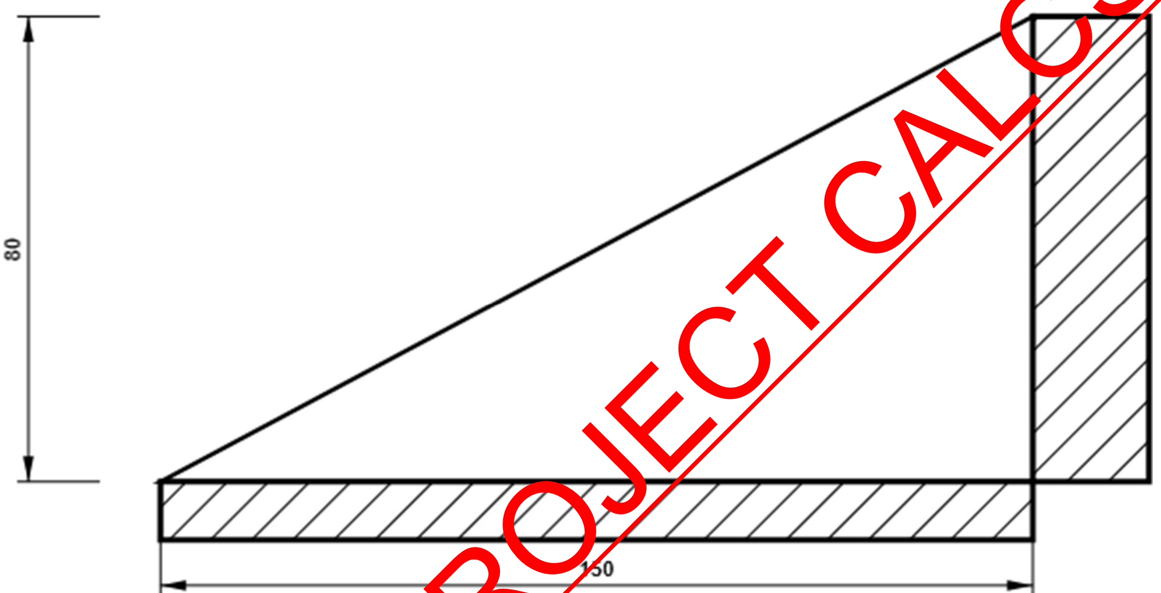

RIB2

P10.0x150-80 (S 355)

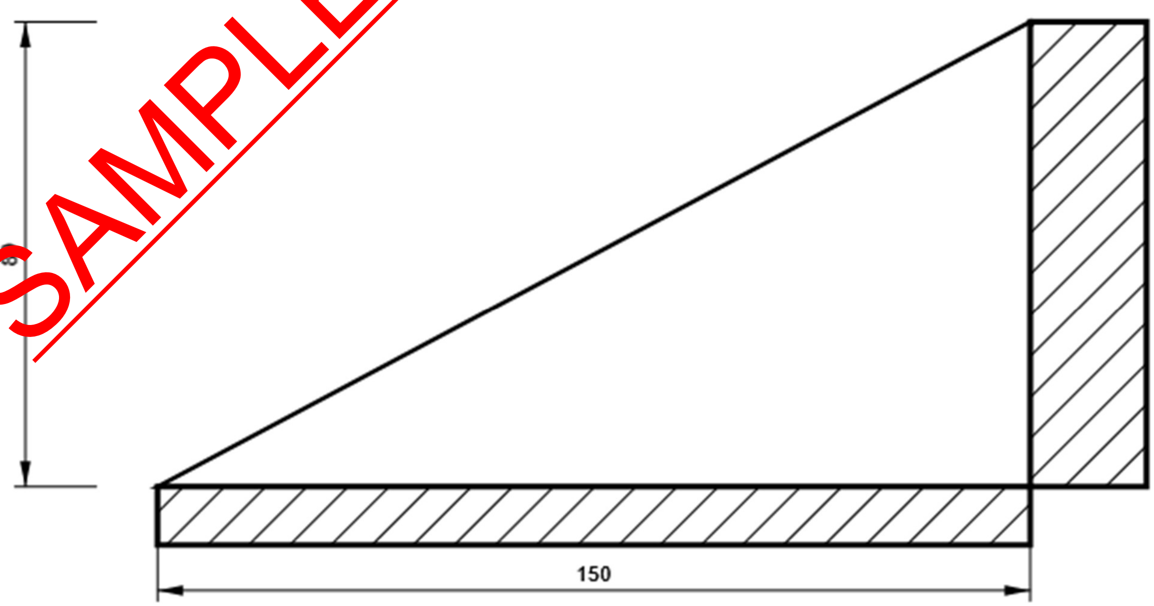

PEPP PEARL ENGINEERS, PLANNERS & PROJECT MANAGERS	**Project:** 68 GROVE PARK RD UK		**Sheet No./Rev.** 159
02 TOWERFIELDS WESTERHAM ROAD BROMLEY, BR2 6HF Email: info@Pearlepp.co.uk Website: www. pearlepp.co.uk Tel no. 02035763199	**Job Ref. 2024-06-**	**Structural Engineer** **MM**	**Date** **11/06/2024**

B, UC 254 x 254 x 89 - Bottom flange 1:

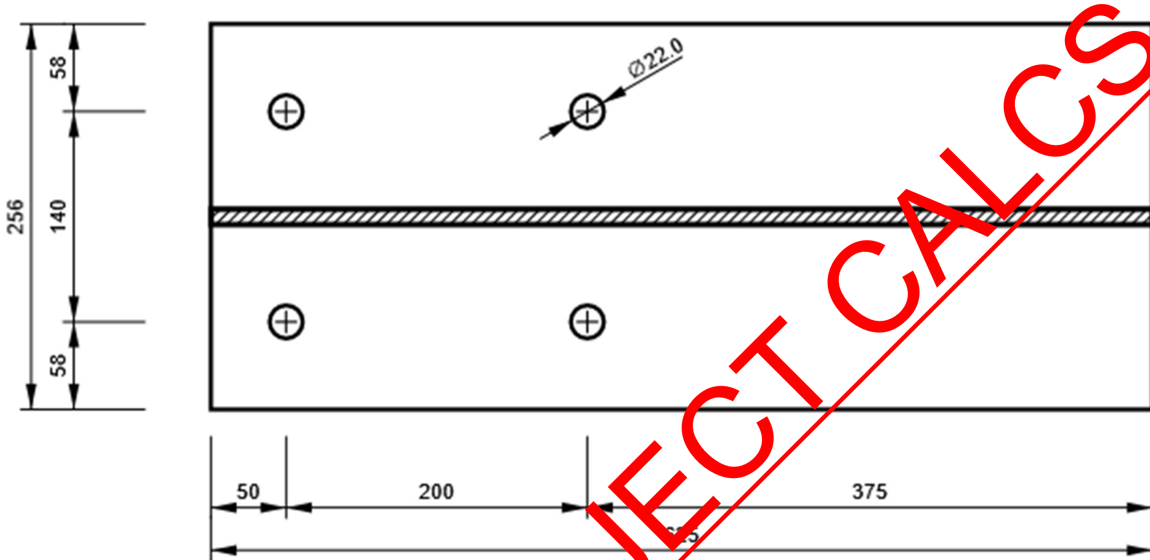

- **Connection-3**

Project data

Project name	
Project number	-
Author	
Description	CONNECTION - 3
Date	
Design code	EN

Material

Steel	S 275
Concrete	C25/30

Project item Connection - 3

Design

Name	Connection - 3
Description	
Analysis	Stress, strain/ simplified loading

Beams and columns

Name	Cross-section	β – Direction [°]	γ - Pitch [°]	α - Rotation [°]	Offset ex [mm]	Offset ey [mm]	Offset ez [mm]	Forces in	X [mm]
M1	1 - UC 152 x 152 x 30	90.0	90.0	0.0	100	0	0	Bolts	182
M2	2 - UC 203 x 203 x 46	90.0	0.0	0.0	-115	0	0	Bolts	161

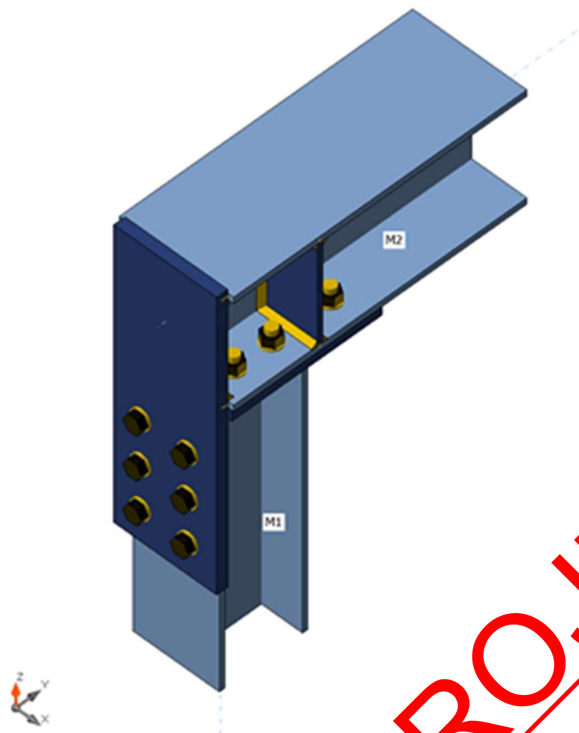

M2
M1

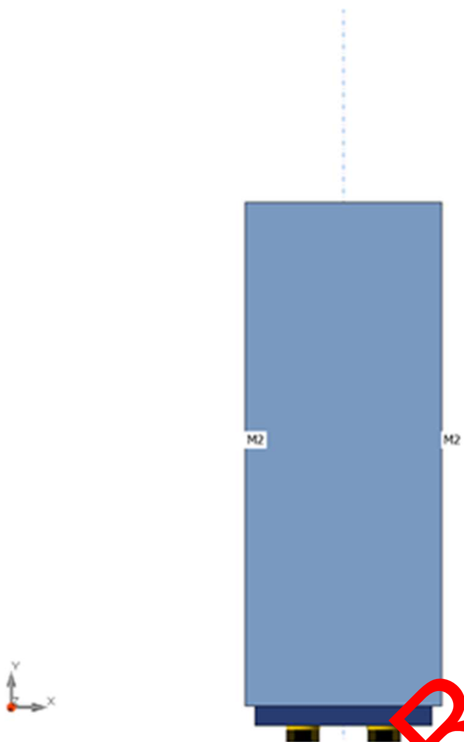
M2
M2
Y
X

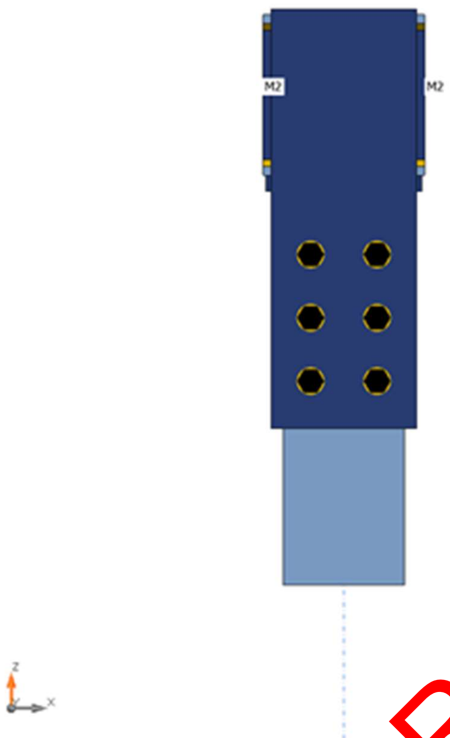

M2
M2

PEPP
PEARL ENGINEERS, PLANNERS & PROJECT MANAGERS

02 TOWERFIELDS WESTERHAM ROAD
BROMLEY, BR2 6HF
Email: info@Pearlepp.co.uk
Website: www. pearlepp.co.uk
Tel no. 02035763199

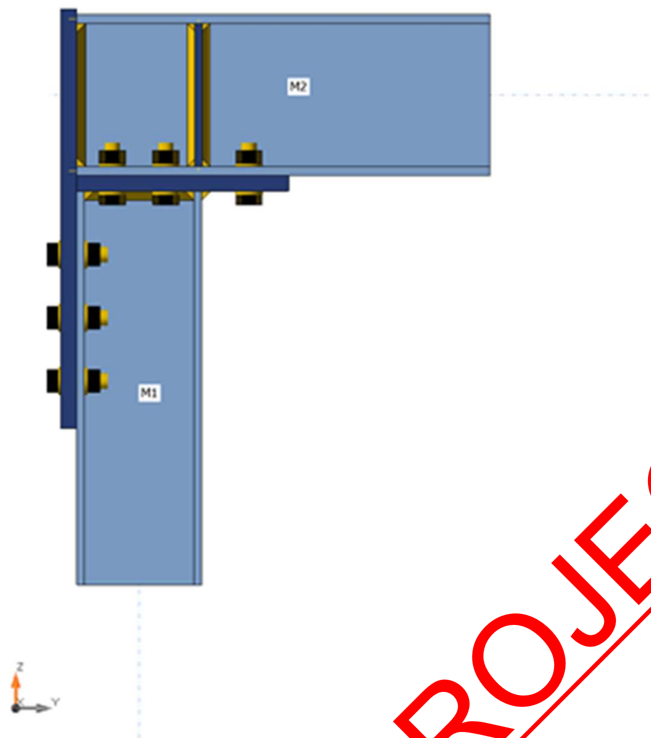

Cross-sections

Name	Material
1 - UC 152 x 152 x 30	S 275
2 - UC 203 x 203 x 46	S 275

Cross-sections

Name	Material	Drawing
1 - UC 152 x 152 x 30	S 275	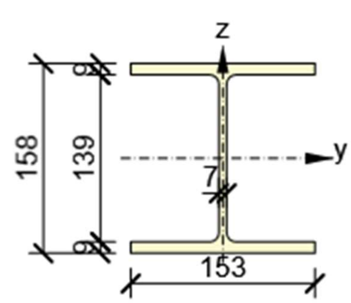

2 - UC 203 x 203 x 46	S 275	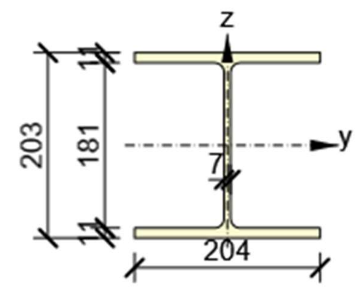

Bolts

Name	Bolt assembly	Diameter [mm]	fu [MPa]	Gross area [mm²]
M20 8.8	M20 8.8	20	800.0	314

Load effects (equilibrium not required)

Name	Member	N [kN]	Vy [kN]	Vz [kN]	Mx [kNm]	My [kNm]	Mz [kNm]
LE2	M2	0.0	0.0	30.0	0.0	15.0	0.0

Check

Summary

Name	Value	Status
Analysis	100.0%	OK
Plates	0.0 < 5.0%	OK
Bolts	13.4 < 100%	OK
Welds	25.6 < 100%	OK
Buckling	26.04	

Plates

Name	Thickness [mm]	Loads	σ_{Ed} [MPa]	ε_{Pl} [%]	σc_{Ed} [MPa]	Status
M1-bfl 1	9.4	LE2	127.9	0.0	8.4	OK
M1-tfl 1	9.4	LE2	147.2	0.0	0.0	OK
M1-w 1	6.5	LE2	89.3	0.0	0.0	OK
M2-bfl 1	11.0	LE2	126.0	0.0	13.4	OK
M2-tfl 1	11.0	LE2	56.7	0.0	0.0	OK

M2-w 1	7.2	LE2	105.7	0.0	0.0	OK
EP1	20.0	LE2	74.3	0.0	13.4	OK
STIFF4a	10.0	LE2	57.2	0.0	0.0	OK
STIFF4b	10.0	LE2	57.5	0.0	0.0	OK
SPL1	20.0	LE2	61.0	0.0	8.4	OK

Design data

Material	f_y [MPa]	ε_{lim} [%]
S 275	275.0	5.0

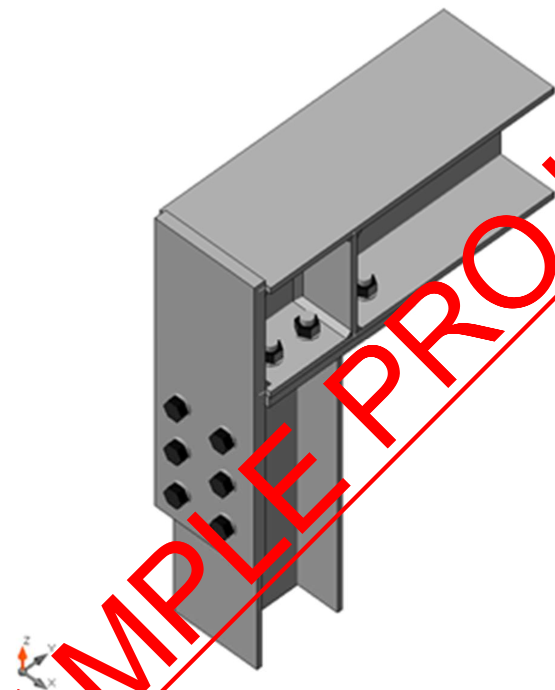

Overall check, LE2

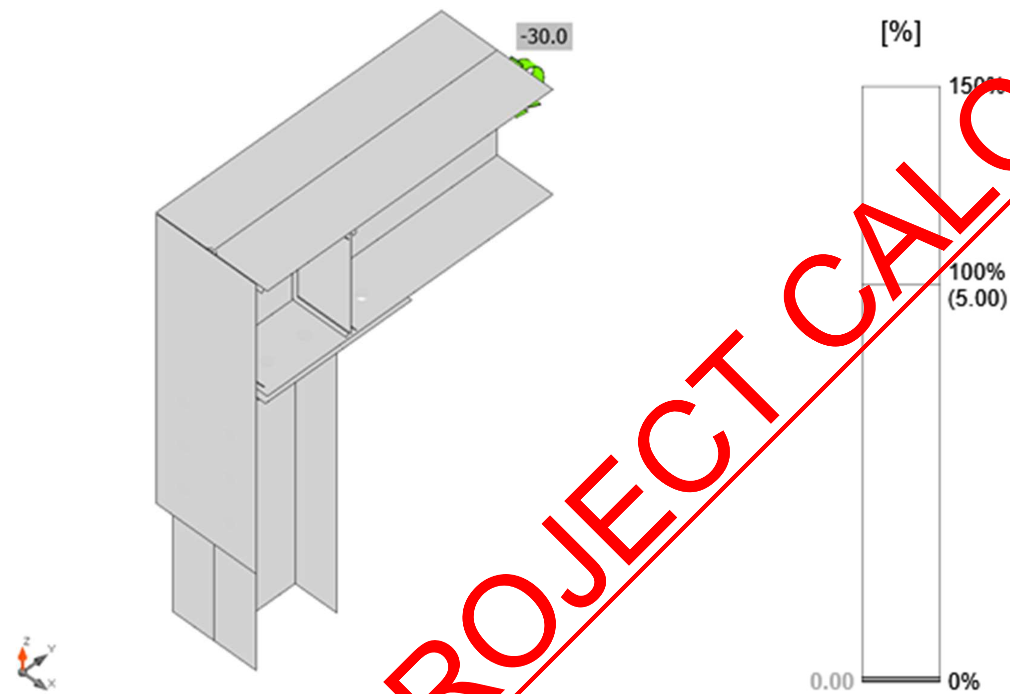

Strain check, LE2

PEPP
PEARL ENGINEERS, PLANNERS & PROJECT MANAGERS
02 TOWERFIELDS WESTERHAM ROAD
BROMLEY, BR2 6HF
Email: info@Pearlepp.co.uk
Website: www. pearlepp.co.uk
Tel no. 02035763199

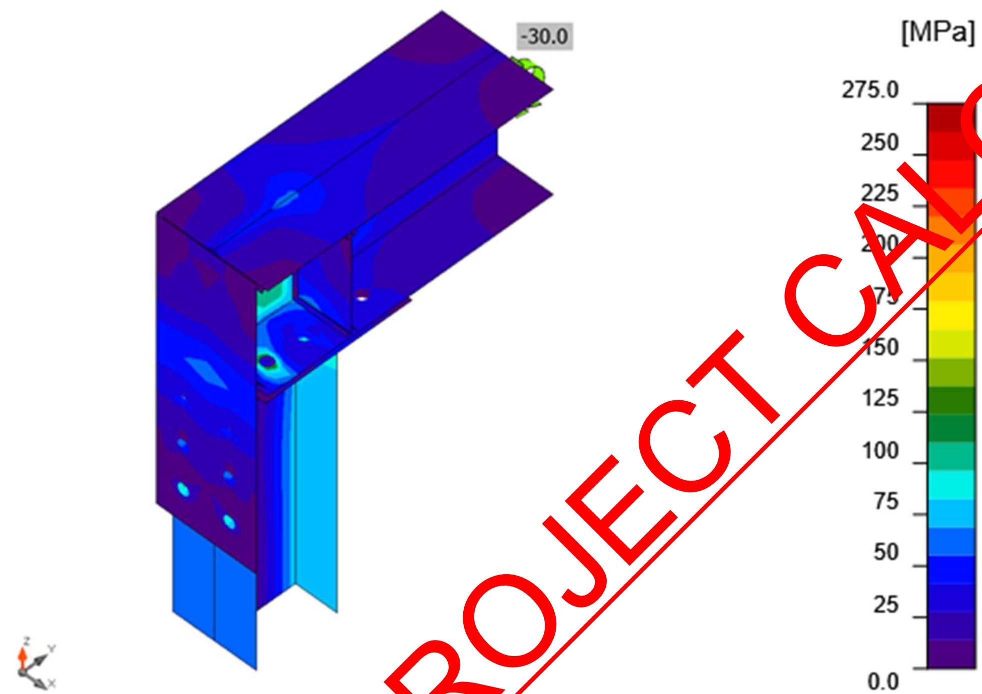

Equivalent stress, LE2

Bolts

	Name	Grade	Loads	$F_{t,Ed}$ [kN]	V [kN]	Ut_t [%]	$F_{b,Rd}$ [kN]	Ut_s [%]	Ut_{ts} [%]	Status
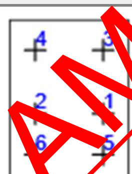	B1	M20 8.8 - 1	LE2	0.8	1.2	0.6	146.5	1.3	1.7	OK
	B2	M20 8.8 - 1	LE2	0.8	1.2	0.6	146.5	1.3	1.7	OK
	B3	M20 8.8 - 1	LE2	0.7	1.7	0.5	189.2	1.8	2.2	OK
	B4	M20 8.8 - 1	LE2	0.7	1.7	0.5	189.2	1.8	2.2	OK
	B5	M20 8.8 - 1	LE2	16.0	1.7	11.4	129.0	1.8	9.9	OK
	B6	M20 8.8 - 1	LE2	16.0	1.7	11.4	129.0	1.8	9.9	OK
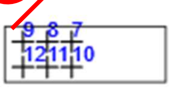	B7	M20 8.8 - 2	LE2	3.5	9.3	2.5	161.7	9.9	11.7	OK
	B8	M20 8.8 - 2	LE2	1.3	10.1	1.0	155.6	10.8	11.4	OK
	B9	M20 8.8 - 2	LE2	3.0	11.2	2.2	155.6	11.9	13.4	OK
	B10	M20 8.8 - 2	LE2	3.5	9.3	2.5	161.7	9.9	11.7	OK
	B11	M20 8.8 - 2	LE2	1.3	10.1	1.0	155.6	10.8	11.4	OK
	B12	M20 8.8 - 2	LE2	3.0	11.2	2.2	155.6	11.9	13.4	OK

Design data

Name	$F_{t,Rd}$	$B_{p,Rd}$	$F_{v,Rd}$

	[kN]	[kN]	[kN]
M20 8.8 - 1	141.1	224.7	94.1
M20 8.8 - 2	141.1	192.0	94.1

Detailed result for B12

Tension resistance check (EN 1993-1-8 tab 3.4)

$$F_{t,Rd} = \frac{k_2 f_{ub} A_s}{\gamma_{M2}} = \quad 141.1 \text{ kN} \geq F_t = \quad 3.0 \text{ kN}$$

where:

$k_2 = 0.90$ – Factor

$f_{ub} = 800.0$ MPa – Ultimate tensile strength of the bolt

$A_s = 245$ mm^2 – Tensile stress area of the bolt

$\gamma_{M2} = 1.25$ – Safety factor

Punching resistance check (EN 1993-1-8 tab 3.4)

$$B_{p,Rd} = \frac{0.6 \pi d_m t_p f_u}{\gamma_{M2}} = \quad 192.0 \text{ kN} \geq F_t = \quad 3.0 \text{ kN}$$

where:

$d_m = 32$ mm – The mean of the across points and across flats dimensions of the bolt head or the nut, whichever is smaller

$t_p = 9$ mm – Thickness

$f_u = 430.0$ MPa – Ultimate strength

$\gamma_{M2} = 1.25$ – Safety factor

Shear resistance check (EN 1993-1-8 tab 3.4)

$$F_{v,Rd} = \frac{\beta_p \alpha_v f_{ub} A}{\gamma_{M2}} = \quad 94.1 \text{ kN} \geq V = \quad 11.2 \text{ kN}$$

where:

$\beta_p = 1.00$ – Reducing factor

$\alpha_v = 0.60$ – Reducing factor

$f_{ub} = 800.0$ MPa – Ultimate tensile strength of the bolt

$A = 245$ mm^2 – Tensile stress area of the bolt

$\gamma_{M2} = 1.25$ – Safety factor

Bearing resistance check (EN 1993-1-8 tab 3.4)

$$F_{b,Rd} = \frac{k_1 \alpha_b f_u d t}{\gamma_{M2}} = \quad 155.6 \text{ kN} \geq V = \quad 11.2 \text{ kN}$$

where:

$$k_1 = \min(2.8\frac{e_2}{d_0} - 1.7, 1.4\frac{p_2}{d_0} - 1.7, 2.5) = 2.50$$ – Factor for edge distance and bolt spacing perpendicular to the direction of load transfer

$\alpha_b = \min(\frac{e_1}{3d_0}, \frac{p_1}{3d_0} - \frac{1}{4}, \frac{f_{ub}}{f_u}, 1) =$ 0.96 – Factor for end distance and bolt spacing in direction of load transfer

$e_2 =$ 34 mm – Distance to the plate edge perpendicular to the shear force

$p_2 =$ 84 mm – Distance between bolts perpendicular to the shear force

$d_0 =$ 22 mm – Bolt hole diameter

$e_1 =$ 240 mm – Distance to the plate edge in the direction of the shear force

$p_1 =$ 80 mm – Distance between bolts in the direction of the shear force

$f_{ub} =$ 800.0 MPa – Ultimate tensile strength of the bolt

$f_u =$ 430.0 MPa – Ultimate strength

$d =$ 20 mm – Nominal diameter of the fastener

$t =$ 9 mm – Thickness of the plate

$\gamma_{M2} =$ 1.25 – Safety factor

Interaction of tension and shear (EN 1993-1-8 tab 3.4)

$$U_{tts} = \frac{F_{v,Ed}}{F_{v,Rd}} + \frac{F_{t,Ed}}{1.4F_{t,Rd}} = \quad 13.4 \ \%$$

Utilization in tension

$$U_{tt} = \frac{F_{t,Ed}}{\min(F_{t,Rd};B_{p,Rd})} = \quad 2.2 \ \%$$

Utilization in shear

$$U_{ts} = \frac{V_{Ed}}{\min(F_{v,Rd};F_{b,Rd})} = \quad 11.9 \ \%$$

Welds (Plastic redistribution)

Item	Edge	Throat th. [mm]	Length [mm]	Loads	$\sigma_{w,Ed}$ [MPa]	ε_{Pl} [%]	$\sigma_\perp$ [MPa]	$\tau_{\parallel}$ [MPa]	$\tau_\perp$ [MPa]	Ut [%]	Ut_c [%]	Status
EP1	M1-bfl 1	◢8.5 ◣	153	LE2	25.3	0.0	13.0	7.8	9.8	6.3	4.4	OK
		◢8.5 ◣	153	LE2	16.3	0.0	-4.3	0.2	9.1	4.0	3.4	OK
EP1	M1-tfl 1	◢8.5 ◣	153	LE2	103.8	0.0	-73.2	0.2	-42.5	25.6	18.7	OK
		◢8.5 ◣	153	LE2	98.6	0.0	-24.5	-0.3	55.2	24.4	15.0	OK
EP1	M1-w 1	◢8.5 ◣	148	LE2	25.9	0.0	8.4	-11.4	8.4	6.4	4.5	OK
		◢8.5 ◣	148	LE2	25.9	0.0	8.4	11.4	-8.4	6.4	4.5	OK

M2-bfl 1	STIFF4a	◢6.5◣	98	LE2	50.0	0.0	-25.2	5.9	-24.2	12.3	10.2	OK
		◢6.5◣	98	LE2	36.0	0.0	-17.1	-3.0	18.1	8.9	7.6	OK
M2-w 1	STIFF4a	◢6.5◣	181	LE2	22.9	0.0	2.3	-13.0	1.7	5.7	4.8	OK
		◢6.5◣	181	LE2	26.3	0.0	-3.4	13.1	7.4	6.5	5.2	OK
M2-tfl 1	STIFF4a	◢6.5◣	98	LE2	16.5	0.0	0.1	7.9	-5.3	4.1	2.1	OK
		◢6.5◣	98	LE2	16.8	0.0	-9.2	-7.2	3.7	4.2	2.5	OK
M2-bfl 1	STIFF4b	◢6.5◣	98	LE2	36.2	0.0	-17.1	3.0	-18.2	8.9	7.6	OK
		◢6.5◣	98	LE2	50.1	0.0	-25.4	-5.7	-24.2	12.4	10.2	OK
M2-w 1	STIFF4b	◢6.5◣	181	LE2	26.4	0.0	-3.4	13.1	-7.5	6.5	5.2	OK
		◢6.5◣	181	LE2	22.9	0.0	2.3	13.1	-1.7	5.7	4.8	OK
M2-tfl 1	STIFF4b	◢6.5◣	98	LE2	16.8	0.0	-9.2	7.2	-3.7	4.1	2.5	OK
		◢6.5◣	98	LE2	16.5	0.0	0.1	-7.9	5.3	4.1	2.1	OK
SPL 1	M2-bfl 1	◢8.0	183	LE2	35.4	0.0	-2.1	-5.6	-19.6	8.7	7.0	OK
SPL 1	M2-tfl 1	◢8.0	183	LE2	16.9	0.0	4.2	-8.5	-4.0	4.2	3.1	OK
SPL 1	M2-w 1	◢8.0◣	192	LE2	52.1	0.0	10.9	27.3	11.0	12.9	9.8	OK
		◢8.0◣	192	LE2	51.8	0.0	10.9	-27.2	-10.8	12.8	9.8	OK

Design data

	β_w [-]	$\sigma_{w,Rd}$ [MPa]	0.9 σ [MPa]
S 275	0.85	404.7	309.6

Detailed result for EP1 M1-tfl 1

Weld resistance check (EN 1993-1-8 4.5.3.2)

$\sigma_{w,Rd} = f_u/(\beta_w \gamma_{M2}) =$ 404.7 MPa ≥ $\sigma_{w,Ed} = [\sigma_\perp^2 + 3(\tau_\perp^2 + \tau_\parallel^2)]^{0.5} =$ 103.8 MPa

$\sigma_{\perp,Rd} = 0.9 f_u/\gamma_{M2} =$ 309.6 MPa ≥ $|\sigma_\perp| =$ 73.2 MPa

where:

f_u = 430.0 MPa – Ultimate strength

β_w = 0.85 – appropriate correlation factor taken from Table 4.1

γ_{M2} = 1.25 – Safety factor

Stress utilization

$U_t = \max(\frac{\sigma_{w,Ed}}{\sigma_{w,Rd}}; \frac{|\sigma_{\perp}|}{\sigma_{\perp,Rd}}) =$ 25.6 %

Buckling

Loads	Shape	Factor [-]
LE2	1	26.04
	2	27.43
	3	35.03
	4	36.92
	5	46.37
	6	46.40

Bill of material

Manufacturing operations

Name	Plates [mm]	Shape	Nr.	Welds [mm]	Length [mm]	Bolts	Nr.
EP1	P20.0x[illegible]96.9-267.6 (S 275)	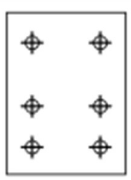	1	Double fillet: a = 8.5	454.0	M20 8.8	6
STIFF4	P10.0x98.2-181.2 (S 275)		2	Double fillet: a = 6.5	755.2		
SPL1	P20.0x530.0-182.9 (S 275)	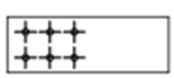	1			M20 8.8	6

CUT1				Fillet: a = 8.0 Fillet: a = 8.0 Double fillet: a = 8.0	182.9 182.9 192.2		

Welds

Type	Material	Throat thickness [mm]	Leg size [mm]	Length [mm]
Double fillet	S 275	8.5	12.0	454.0
Double fillet	S 275	6.5	9.2	755.2
Fillet	S 275	8.0	11.3	182.9
Fillet	S 275	8.0	11.3	182.9
Double fillet	S 275	8.0	11.3	192.2

Bolts

Name	Grip length [mm]	Count
M20 8.8	31	6
M20 8.8	29	6

Drawing

EP1

P20.0x268-197 (S 275)

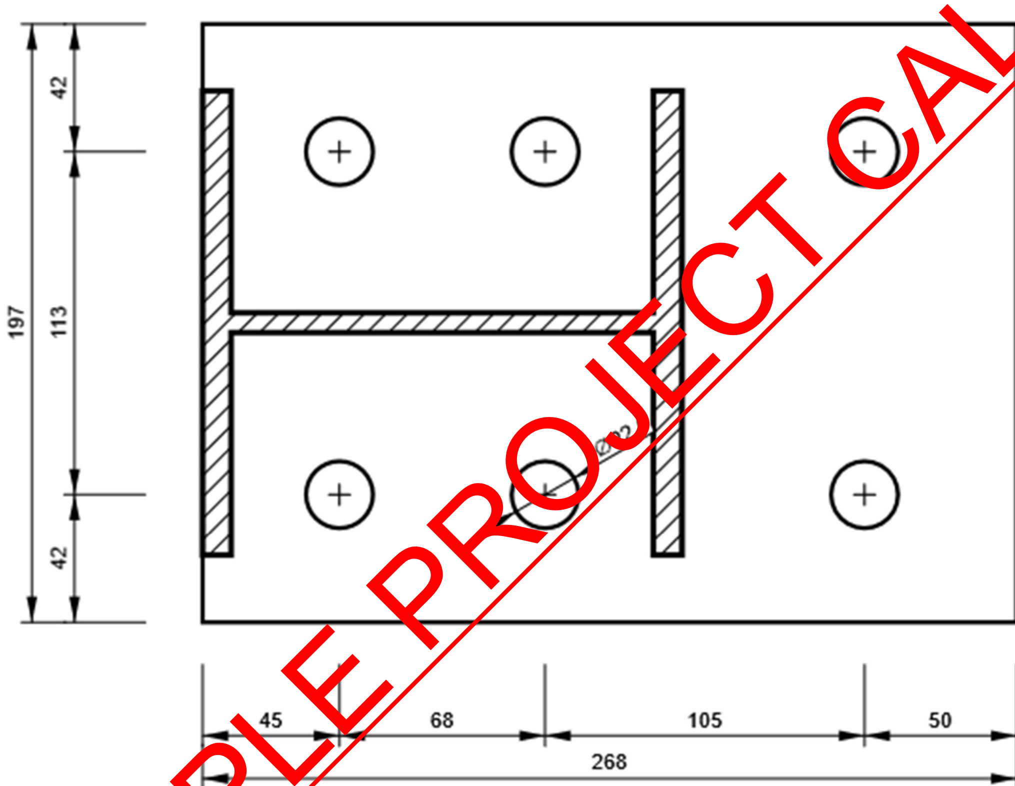

02 TOWERFIELDS WESTERHAM ROAD
BROMLEY, BR2 6HF
Email: info@Pearlepp.co.uk
Website: www. pearlepp.co.uk
Tel no. 02035763199

STIFF4

P10.0x181-98 (S 275)

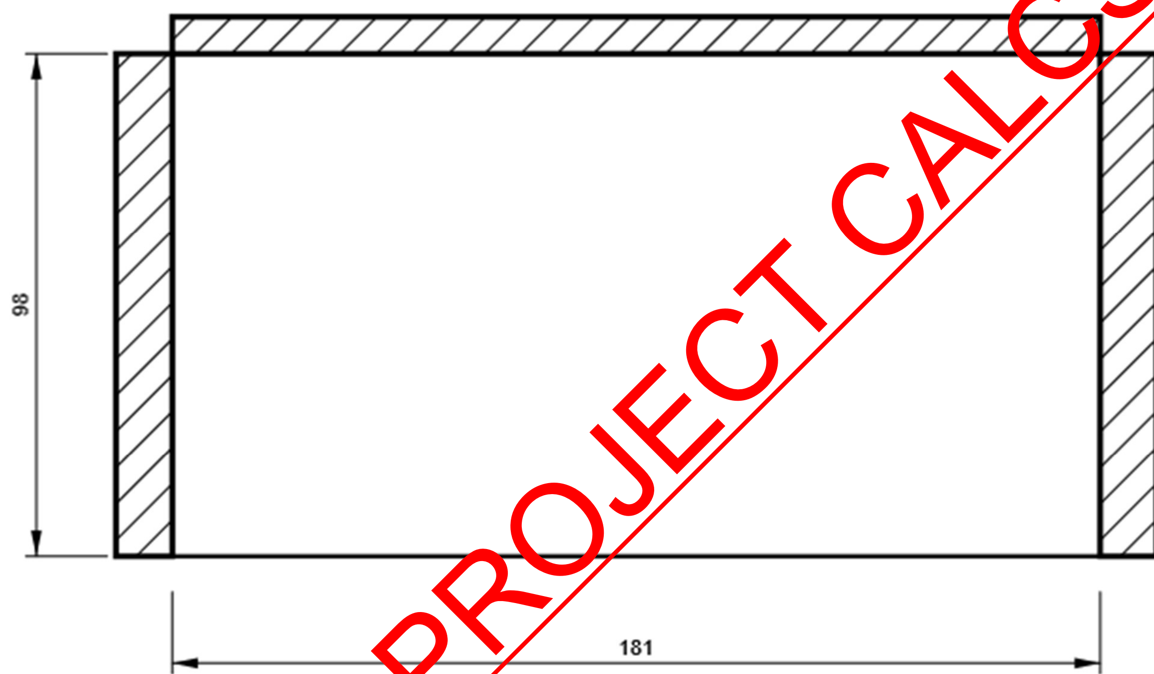

SPL1

P20.0x183-530 (S 275)

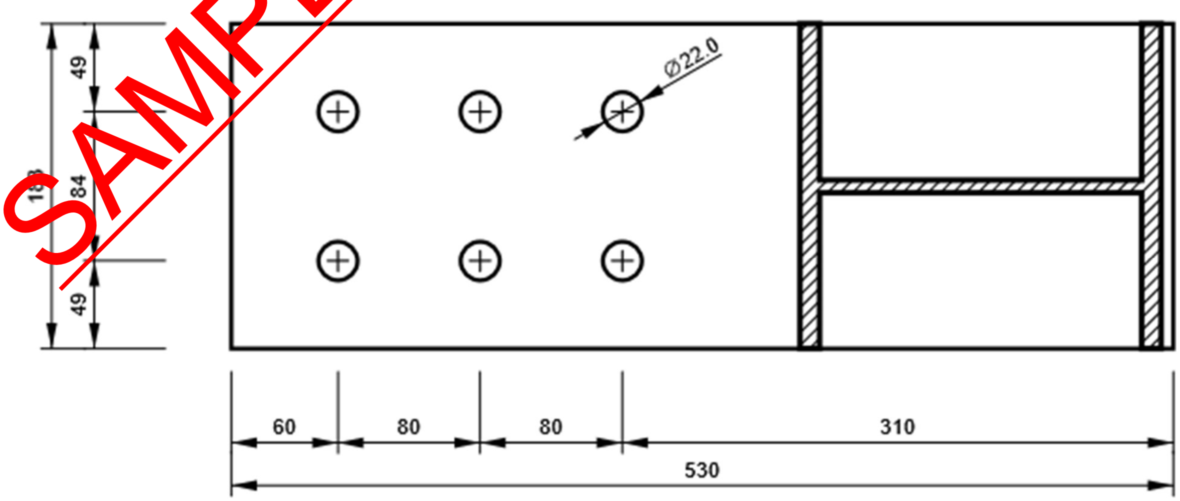

M1, UC 152 x 152 x 30 - Bottom flange 1:

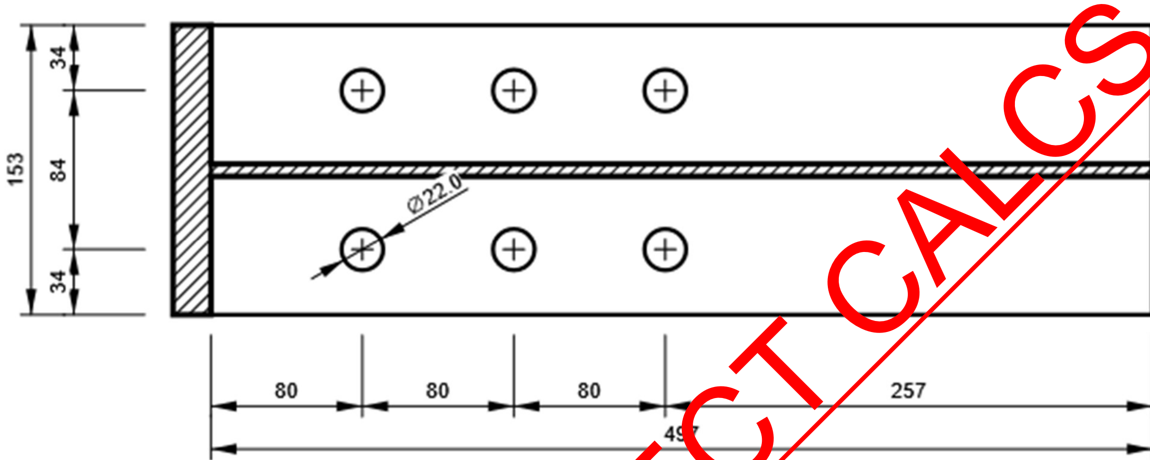

M2, UC 203 x 203 x 46 - Bottom flange 1:

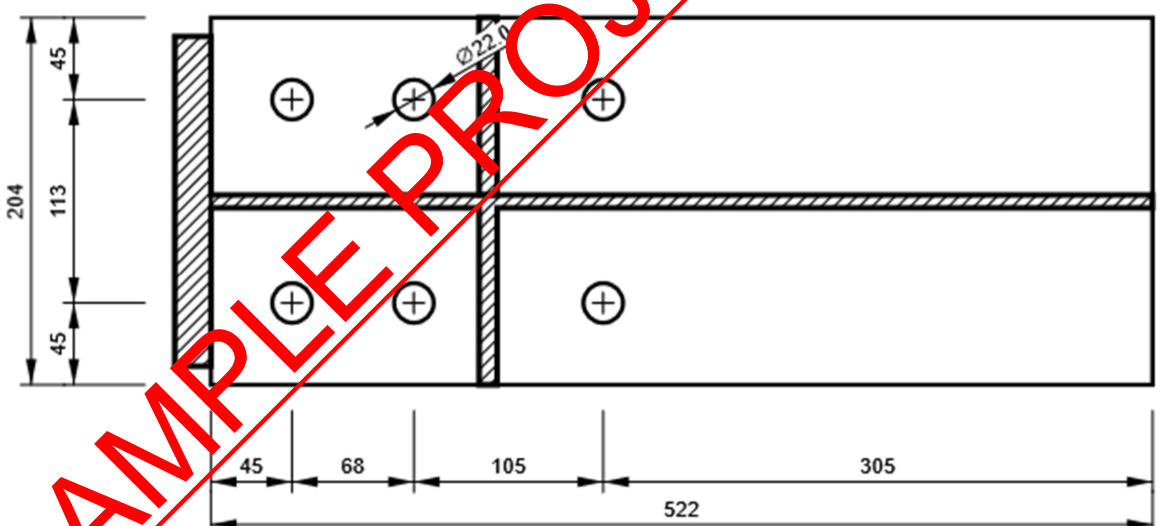

- **Connection-4**

Project data

Project name
Project number
Author
Description
Date
Design code EN

Material

Steel S 275

Project item CON4

Design

Name CON4
Description
Analysis Stress, strain/ simplified loading

Beams and columns

Name	Cross-section	β – Direction [°]	γ - Pitch [°]	α - Rotation [°]	Offset ex [mm]	Offset ey [mm]	Offset ez [mm]	Forces in
C	3 - SHS100/100/10.0	0.0	90.0	0.0	0	0	0	Bolts
B	2 - UC 203 x 203 x 46	0.0	0.0	0.0	0	0	0	Bolts

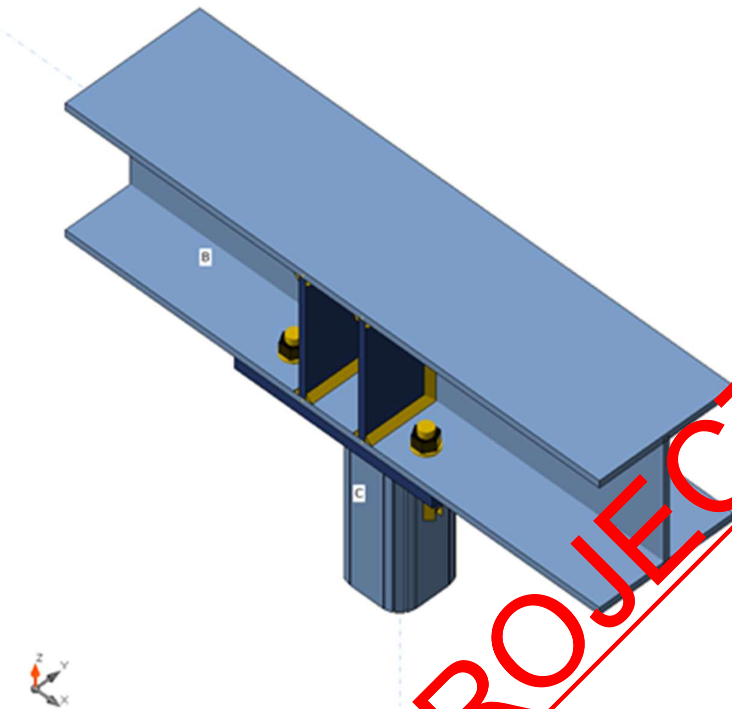

B
C

PEPP PEARL ENGINEERS, PLANNERS & PROJECT MANAGERS	**Project:** 68 GROVE PARK RD UK		**Sheet No./Rev.** 179
02 TOWERFIELDS WESTERHAM ROAD BROMLEY, BR2 6HF Email: info@Pearlepp.co.uk Website: www. pearlepp.co.uk Tel no. 02035763199	**Job Ref. 2024-06-**	**Structural Engineer** **MM**	**Date 11/06/2024**

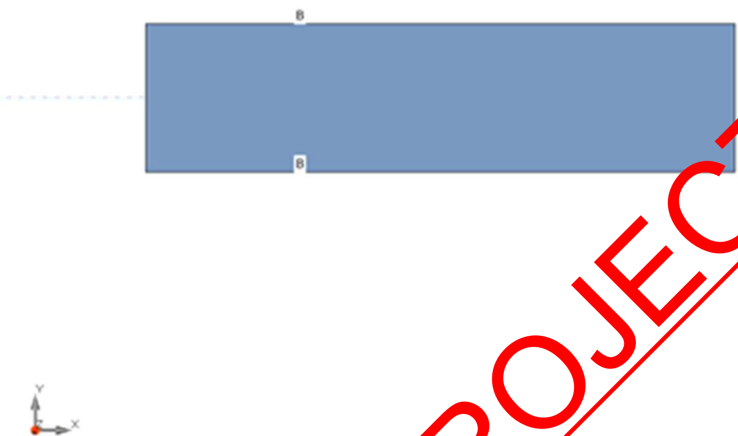

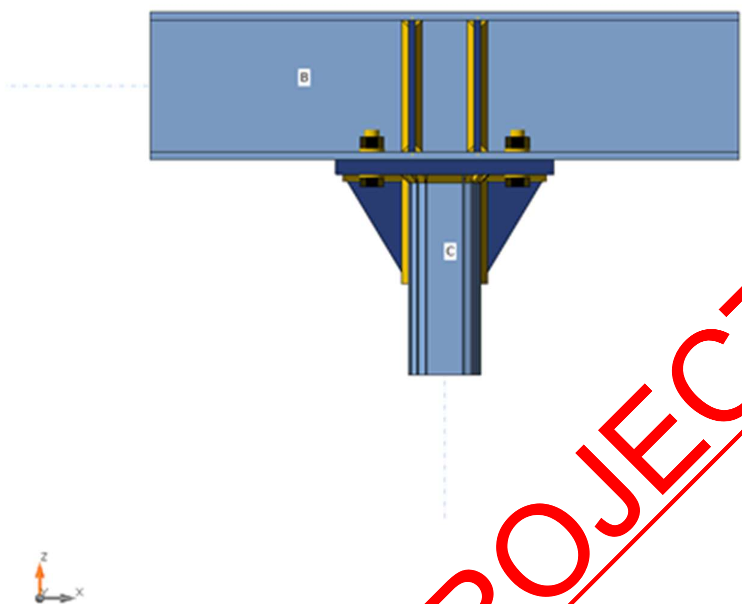

B
C
z
x

PEPP PEARL ENGINEERS, PLANNERS & PROJECT MANAGERS	**Project:** 68 GROVE PARK RD UK		**Sheet No./Rev.** 181
02 TOWERFIELDS WESTERHAM ROAD BROMLEY, BR2 6HF Email: info@Pearlepp.co.uk Website: www. pearlepp.co.uk Tel no. 02035763199	**Job Ref. 2024-06-**	**Structural Engineer** **MM**	**Date** **11/06/2024**

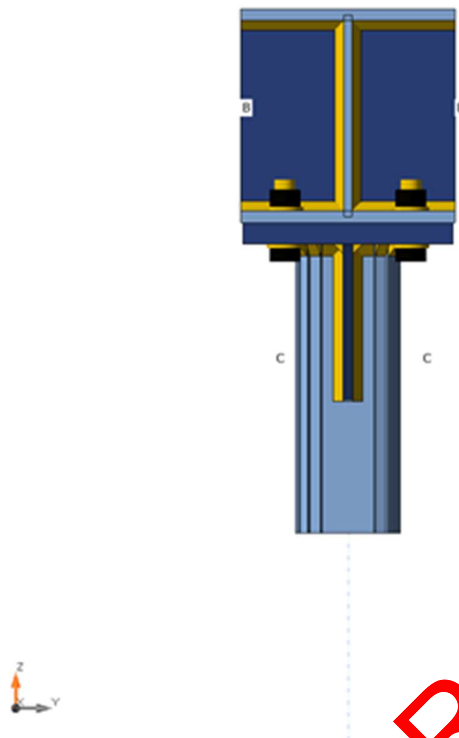

Cross-sections

Name	Material
3 - SHS100/100/10.0	S 275
2 - UC 203 x 203 x 46	S 275

Cross-sections

Name	Material	Drawing
3 - SHS100/100/10.0	S 275	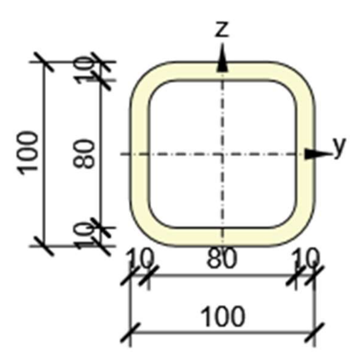

2 - UC 203 x 203 x 46	S 275	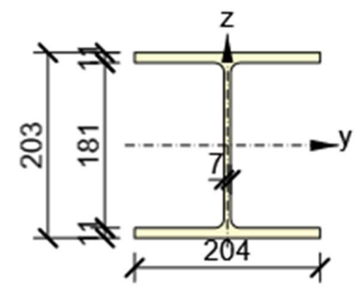

Bolts

Name	Bolt assembly	Diameter [mm]	fu [MPa]	Gross area [mm²]
M20 8.8	M20 8.8	20	800.0	314

Load effects (equilibrium not required)

Name	Member	N [kN]	Vy [kN]	Vz [kN]	Mx [kNm]	My [kNm]	Mz [kNm]
LE1	B	0.0	0.0	15.0	0.0	9.0	0.0
	B	0.0	0.0	-12.0	0.0	10.0	0.0

Check

Summary

Name	Value	Status
Analysis	100.0%	OK
Plates	0.2 < 5.0%	OK
Bolts	35.4 < 100%	OK
Welds	54.4 < 100%	OK
Buckling	42.97	
GMNA	Calculated	

Plates

Name	Thickness [mm]	Loads	σ_{Ed} [MPa]	ε_{Pl} [%]	σc_{Ed} [MPa]	Status
C	10.0	LE1	275.2	0.1	0.0	OK
B-bfl 1	11.0	LE1	275.1	0.1	34.0	OK
B-tfl 1	11.0	LE1	41.5	0.0	0.0	OK

B-w 1	7.2	LE1	131.8	0.0	0.0	OK
EP1	20.0	LE1	143.8	0.0	34.0	OK
RIB1	10.0	LE1	275.3	0.2	0.0	OK
RIB2	10.0	LE1	231.3	0.0	0.0	OK
STIFF1a	10.0	LE1	140.0	0.0	0.0	OK
STIFF1b	10.0	LE1	140.0	0.0	0.0	OK
STIFF1c	10.0	LE1	45.6	0.0	0.0	OK
STIFF1d	10.0	LE1	45.5	0.0	0.0	OK

Design data

Material	f_y [MPa]	ε_{lim} [%]
S 275	275.0	5.0

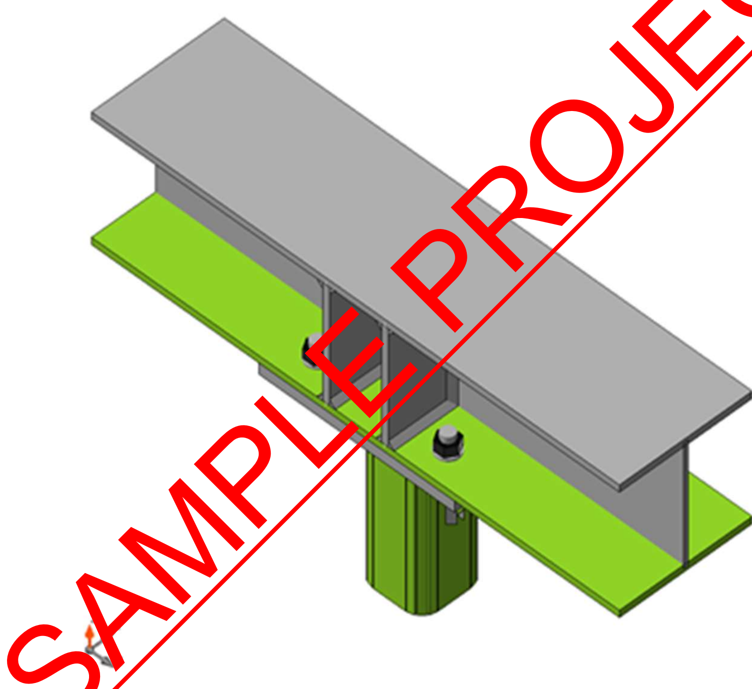

Overall check, LE1

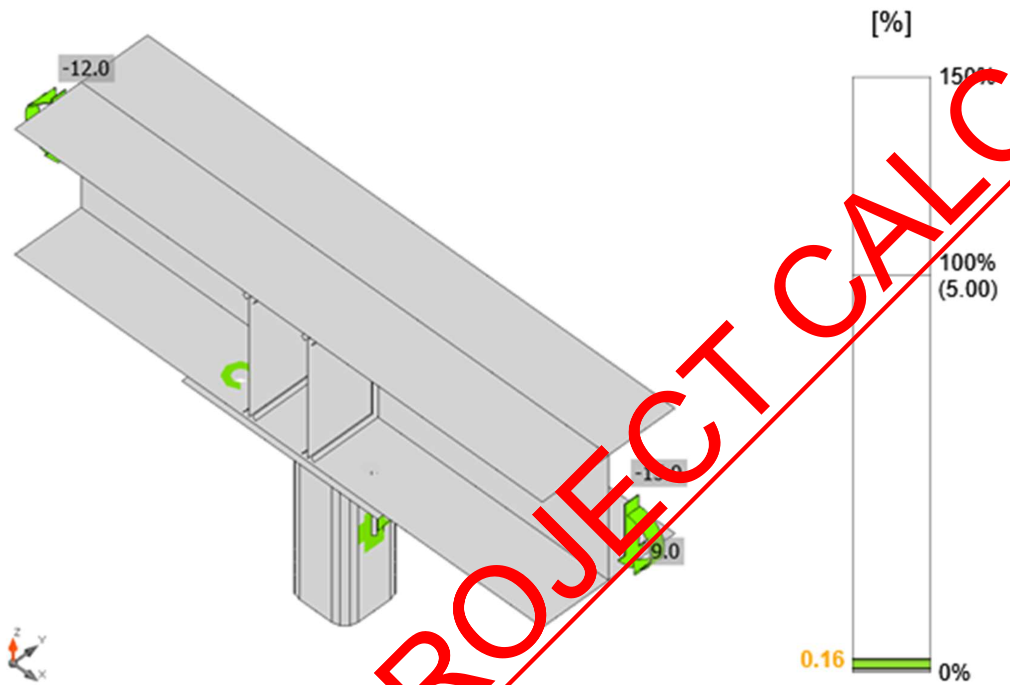

Strain check, LE1

02 TOWERFIELDS WESTERHAM ROAD BROMLEY, BR2 6HF Email: info@Pearlepp.co.uk Website: www. pearlepp.co.uk Tel no. 02035763199	**Project:** 68 GROVE PARK RD UK		**Sheet No./Rev.** 185
	Job Ref. 2024-06-	**Structural Engineer** **MM**	**Date** **11/06/2024**

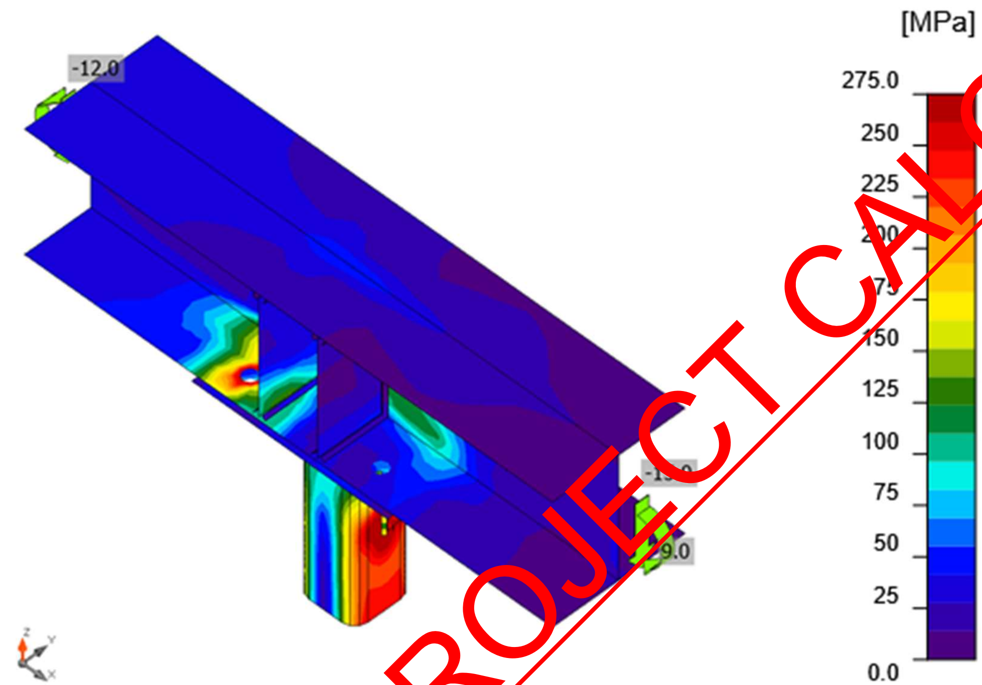

Equivalent stress, LE1

Bolts

	Name	Loads	$F_{t,Ed}$ [kN]	V [kN]	Ut_t [%]	$F_{b,Rd}$ [kN]	Ut_s [%]	Ut_{ts} [%]	Status
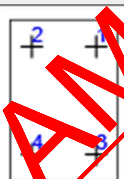	B1	LE1	2.3	0.6	1.6	189.2	0.7	1.8	OK
	B2	LE1	2.3	0.6	1.6	189.2	0.7	1.8	OK
	B3	LE1	50.0	0.8	35.4	127.2	0.8	26.1	OK
	B4	LE1	50.0	0.8	35.4	127.1	0.8	26.1	OK

Design data

Name	$F_{t,Rd}$ [kN]	$B_{p,Rd}$ [kN]	$F_{v,Rd}$ [kN]
M20 8.8 - 1	141.1	224.7	94.1

PEPP
PEARL ENGINEERS, PLANNERS & PROJECT MANAGERS

02 TOWERFIELDS WESTERHAM ROAD
BROMLEY, BR2 6HF
Email: info@Pearlepp.co.uk
Website: www. pearlepp.co.uk
Tel no. 02035763199

Detailed result for B3

Tension resistance check (EN 1993-1-8 tab 3.4)

$F_{t,Rd} = \frac{k_2 f_{ub} A_s}{\gamma_{M2}} =$ 141.1 kN ≥ $F_t =$ 50.0 kN

where:

- $k_2 = 0.90$ – Factor
- $f_{ub} = 800.0$ MPa – Ultimate tensile strength of the bolt
- $A_s = 245$ mm^2 – Tensile stress area of the bolt
- $\gamma_{M2} = 1.25$ – Safety factor

Punching resistance check (EN 1993-1-8 tab 3.4)

$B_{p,Rd} = \frac{0.6\pi d_m t_p f_u}{\gamma_{M2}} =$ 224.7 kN ≥ $F_t =$ 50.0 kN

where:

- $d_m = 32$ mm – The mean of the across points and across flats dimensions of the bolt head or the nut, whichever is smaller
- $t_p = 11$ mm – Thickness
- $f_u = 430.0$ MPa – Ultimate strength
- $\gamma_{M2} = 1.25$ – Safety factor

Shear resistance check (EN 1993-1-8 tab 3.4)

$F_{v,Rd} = \frac{\beta_p \alpha_v f_{ub} A}{\gamma_{M2}} =$ 94.1 kN ≥ $V =$ 0.8 kN

where:

- $\beta_p = 1.00$ – Reducing factor
- $\alpha_v = 0.60$ – Reducing factor
- $f_{ub} = 800.0$ MPa – Ultimate tensile strength of the bolt
- $A = 245$ mm^2 – Tensile stress area of the bolt
- $\gamma_{M2} = 1.25$ – Safety factor

Bearing resistance check (EN 1993-1-8 tab 3.4)

$F_{b,Rd} = \frac{k_1 \alpha_b f_u d t}{\gamma_{M2}} =$ 127.2 kN ≥ $V =$ 0.8 kN

where:

- $k_1 = \min(2.8\frac{e_2}{d_0} - 1.7, 1.4\frac{p_2}{d_0} - 1.7, 2.5) = 2.50$ – Factor for edge distance and bolt spacing perpendicular to the direction of load transfer
- $\alpha_b = \min(\frac{e_1}{3d_0}, \frac{p_1}{3d_0} - \frac{1}{4}, \frac{f_{ub}}{f_u}, 1) = 0.67$ – Factor for end distance and bolt spacing in direction of load transfer
- $e_2 = 42$ mm – Distance to the plate edge perpendicular to the shear force

$p_2 = \infty$ mm – Distance between bolts perpendicular to the shear force

$d_0 = 22$ mm – Bolt hole diameter

$e_1 = 44$ mm – Distance to the plate edge in the direction of the shear force

$p_1 = \infty$ mm – Distance between bolts in the direction of the shear force

$f_{ub} = 800.0$ MPa – Ultimate tensile strength of the bolt

$f_u = 430.0$ MPa – Ultimate strength

$d = 20$ mm – Nominal diameter of the fastener

$t = 11$ mm – Thickness of the plate

$\gamma_{M2} = 1.25$ – Safety factor

Interaction of tension and shear (EN 1993-1-8 tab 3.4)

$$U_{tts} = \frac{F_{v,Ed}}{F_{v,Rd}} + \frac{F_{t,Ed}}{1.4F_{t,Rd}} = 26.1 \ \%$$

Utilization in tension

$$U_{tt} = \frac{F_{t,Ed}}{\min(F_{t,Rd}; B_{p,Rd})} = 35.4 \ \%$$

Utilization in shear

$$U_{ts} = \frac{V_{Ed}}{\min(F_{v,Rd}; F_{b,Rd})} = 0.8 \ \%$$

Welds (Plastic redistribution)

Item	Edge	Throat th. [mm]	Length [mm]	Loads	$\sigma_{w,Ed}$ [MPa]	ε_{Pl} [%]	$\sigma_\perp$ [MPa]	$\tau_{\|\|}$ [MPa]	$\tau_\perp$ [MPa]	Ut [%]	Ut_c [%]	Status
EP1	C	◢8.5	324	LE1	142.0	0.0	59.2	62.2	-41.1	35.1	26.0	OK
EP1	RIB1	◢6.5 ◣	90	LE1	220.0	0.0	-97.4	59.1	-97.4	54.4	33.6	OK
		◢6.5 ◣	90	LE1	219.2	0.0	-97.3	-58.0	97.4	54.2	33.4	OK
C-w 2	RIB1	◢6.5 ◣	150	LE1	184.5	0.0	-33.3	-99.3	-33.3	45.6	22.3	OK
		◢6.5 ◣	150	LE1	184.4	0.0	-33.3	99.3	33.3	45.6	22.3	OK
EP1	RIB2	◢6.5 ◣	90	LE1	98.9	0.0	39.8	-33.9	39.8	24.4	18.6	OK
		◢6.5 ◣	90	LE1	98.8	0.0	39.8	33.9	-39.8	24.4	18.6	OK
C-w 1	RIB2	◢6.5 ◣	150	LE1	176.1	0.0	24.0	97.8	24.0	43.5	12.9	OK

		◢6.5 ◣	150	LE1	176.2	0.0	24.0	-97.9	-24.0	43.5	13.0	OK
B-bfl 1	STIFF1 a	◢6.5 ◣	98	LE1	35.7	0.0	-10.4	13.2	-14.6	8.8	7.6	OK
		◢6.5 ◣	98	LE1	92.3	0.0	39.6	39.2	-28.0	22.8	16.9	OK
B-w 1	STIFF1 a	◢6.5 ◣	181	LE1	32.4	0.0	20.7	11.4	8.8	8.0	4.9	OK
		◢6.5 ◣	181	LE1	20.0	0.0	-16.7	-4.0	4.8	5.4	3.4	OK
B-tfl 1	STIFF1 a	◢6.5 ◣	98	LE1	16.0	0.0	7.4	-3.8	7.2	4.0	3.5	OK
		◢6.5 ◣	98	LE1	15.6	0.0	-7.1	6.8	-4.1	3.8	2.4	OK
B-bfl 1	STIFF1 b	◢6.5 ◣	98	LE1	91.4	0.0	39.0	-38.9	27.6	22.6	16.9	OK
		◢6.5 ◣	98	LE1	35.9	0.0	-10.1	19.9	-1.2	8.9	7.7	OK
B-w 1	STIFF1 b	◢6.5 ◣	181	LE1	20.0	0.0	-16.7	4.0	-4.8	5.4	3.4	OK
		◢6.5 ◣	181	LE1	32.3	0.0	20.7	-11.4	-8.8	8.0	4.9	OK
B-tfl 1	STIFF1 b	◢6.5 ◣	98	LE1	15.5	0.0	-7.2	-6.8	4.1	3.8	2.4	OK
		◢6.5 ◣	98	LE1	16.0	0.0	7.4	3.8	-7.2	4.0	3.5	OK
B-bfl 1	STIFF1 c	◢6.5 ◣	98	LE1	22.0	0.0	-13.0	-1.2	-10.2	5.4	4.9	OK
		◢6.5 ◣	98	LE1	13.5	0.0	10.0	0.8	5.1	3.3	1.8	OK
B-w 1	STIFF1 c	◢6.5 ◣	181	LE1	15.0	0.0	3.9	7.1	-4.4	3.7	2.1	OK
		◢6.5 ◣	181	LE1	16.8	0.0	3.3	7.7	5.6	4.2	2.3	OK
B-tfl 1	STIFF1 c	◢6.5 ◣	98	LE1	12.6	0.0	8.6	4.5	-2.8	3.1	2.0	OK
		◢6.5 ◣	98	LE1	13.3	0.0	-6.6	-1.4	6.5	3.3	2.8	OK
B-bfl 1	STIFF1 d	◢6.5 ◣	98	LE1	13.4	0.0	10.1	-0.8	-5.1	3.3	1.8	OK
		◢6.5 ◣	98	LE1	22.2	0.0	-13.1	1.1	10.3	5.5	4.9	OK
B-w 1	STIFF1 d	◢6.5 ◣	181	LE1	16.8	0.0	3.3	-7.7	-5.6	4.2	2.3	OK
		◢6.5 ◣	181	LE1	15.0	0.0	3.9	-7.1	4.4	3.7	2.1	OK
B-tfl 1	STIFF1 d	◢6.5 ◣	98	LE1	13.3	0.0	-6.6	1.3	-6.5	3.3	2.8	OK

		◢6.5 ◣	98	LE1	12.6	0.0	8.6	-4.5	2.8	3.1	2.0	OK

Design data

	β_w [-]	$\sigma_{w,Rd}$ [MPa]	0.9 σ [MPa]
S 275	0.85	404.7	309.6

Detailed result for EP1 RIB1

Weld resistance check (EN 1993-1-8 4.5.3.2)

$\sigma_{w,Rd} = f_u/(\beta_w \gamma_{M2}) =$ 404.7 MPa ≥ $\sigma_{w,Ed} = [\sigma_\perp^2 + 3(\tau_\perp^2 + \tau_\parallel^2)]^{0.5} =$ 220.0 MPa

$\sigma_{\perp,Rd} = 0.9 f_u/\gamma_{M2} =$ 309.6 MPa ≥ $|\sigma_\perp| =$ 97.4 MPa

where:

$f_u =$ 430.0 MPa – Ultimate strength

$\beta_w =$ 0.85 – appropriate correlation factor taken from Table 4.1

$\gamma_{M2} =$ 1.25 – Safety factor

Stress utilization

$U_t = \max(\frac{\sigma_{w,Ed}}{\sigma_{w,Rd}}; \frac{|\sigma_\perp|}{\sigma_{\perp,Rd}}) =$ 54.4 %

Buckling

Loads	Shape	Factor [-]
LE1	1	42.97
	2	47.32
	3	55.94
	4	67.39
	5	67.40
	6	67.74

Bill of material

Manufacturing operations

Name	Plates [mm]	Shape	Nr.	Welds [mm]	Length [mm]	Bolts	Nr.

EP1	P20.0x200.0-300.0 (S 275)	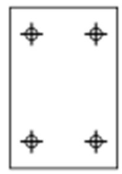	1	Fillet: a = 8.5	324.2	M20 8.8	4
RIB1	P10.0x90.0-150.0 (S 275)		1	Double fillet: a = 6.5	240.0		
RIB2	P10.0x90.0-150.0 (S 275)		1	Double fillet: a = 6.5	240.0		
STIFF1	P10.0x98.2-181.2 (S 275)		4	Double fillet: a = 6.5	1510.4		

Welds

Type	Material	Throat thickness [mm]	Leg size [mm]	Length [mm]
Fillet	S 275	8.5	12.0	324.2
Double fillet	S 275	6.5	9.2	1990.4

Bolts

Name	Grip length [mm]	Count
M20 8.8	31	4

PEPP – PEARL ENGINEERS, PLANNERS & PROJECT MANAGERS 02 TOWERFIELDS WESTERHAM ROAD BROMLEY, BR2 6HF Email: info@Pearlepp.co.uk Website: www. pearlepp.co.uk Tel no. 02035763199	**Project:** 68 GROVE PARK RD UK		**Sheet No./Rev.** 191
	Job Ref. 2024-06-	**Structural Engineer** **MM**	**Date** **11/06/2024**

Drawing

EP1

P20.0x300-200 (S 275)

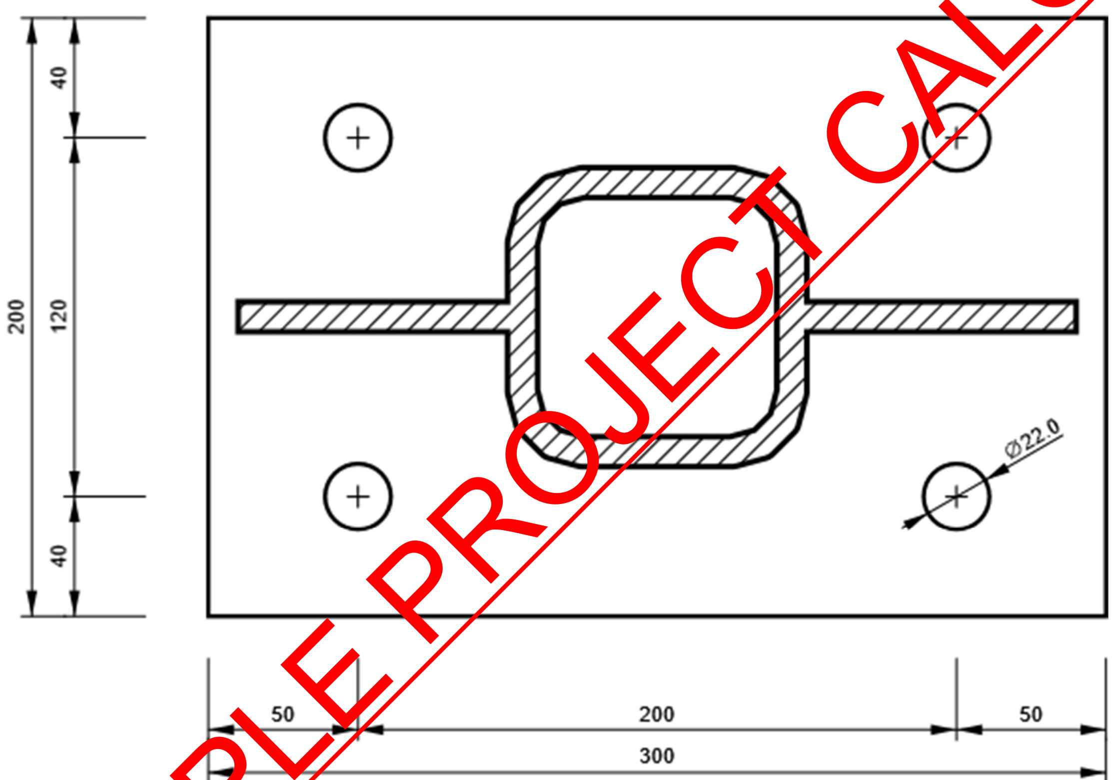

RIB1

P10.0x150-90 (S 275)

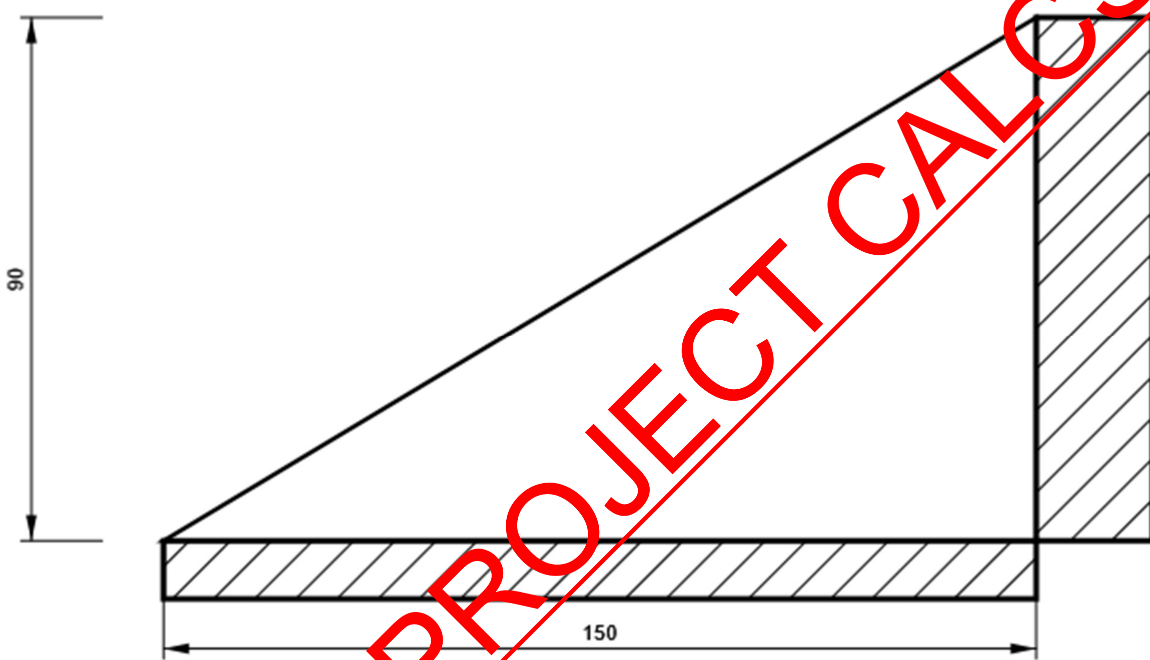

RIB2

P10.0x150-90 (S 275)

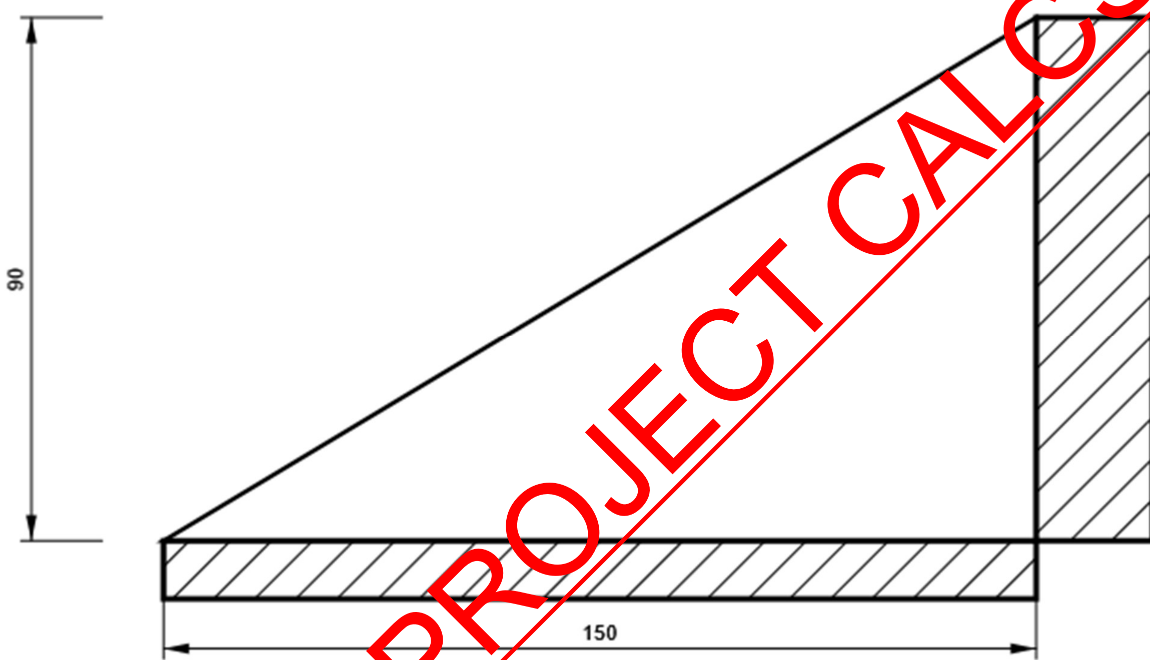

02 TOWERFIELDS WESTERHAM ROAD BROMLEY, BR2 6HF Email: info@Pearlepp.co.uk Website: www. pearlepp.co.uk Tel no. 02035763199	**Project:** 68 GROVE PARK RD UK	**Sheet No./Rev.** 194
	Job Ref. 2024-06- / **Structural Engineer** **MM**	**Date** **11/06/2024**

STIFF1

P10.0x181-98 (S 275)

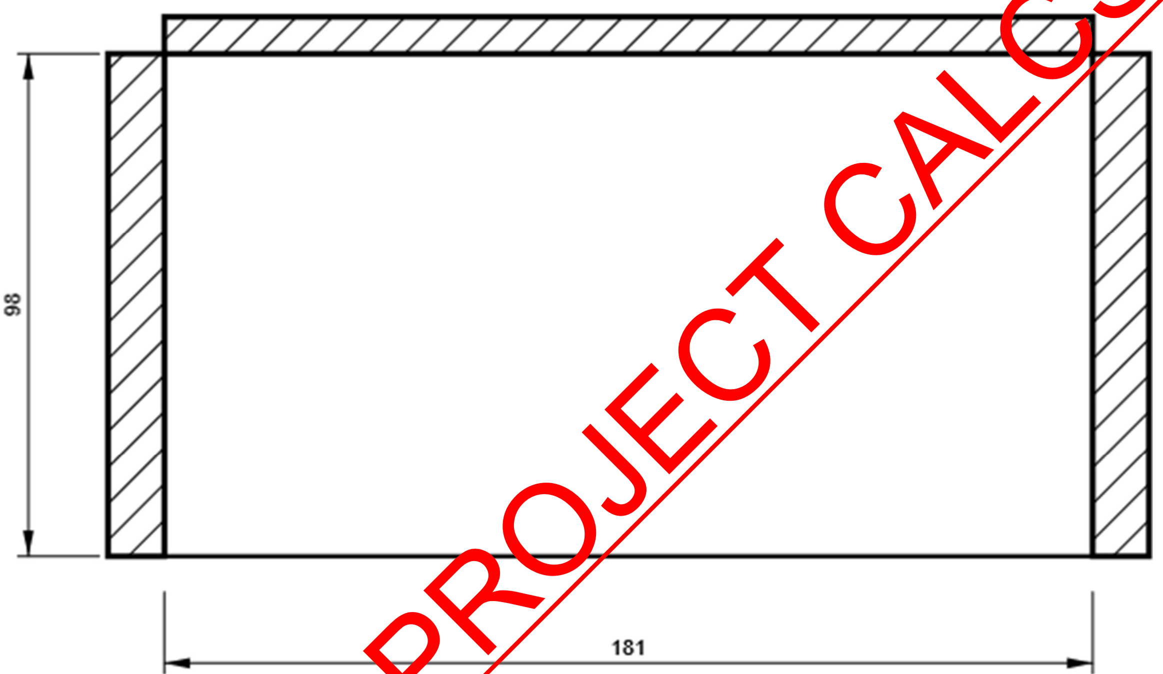

B, UC 203 x 203 x 46 - Bottom flange 1:

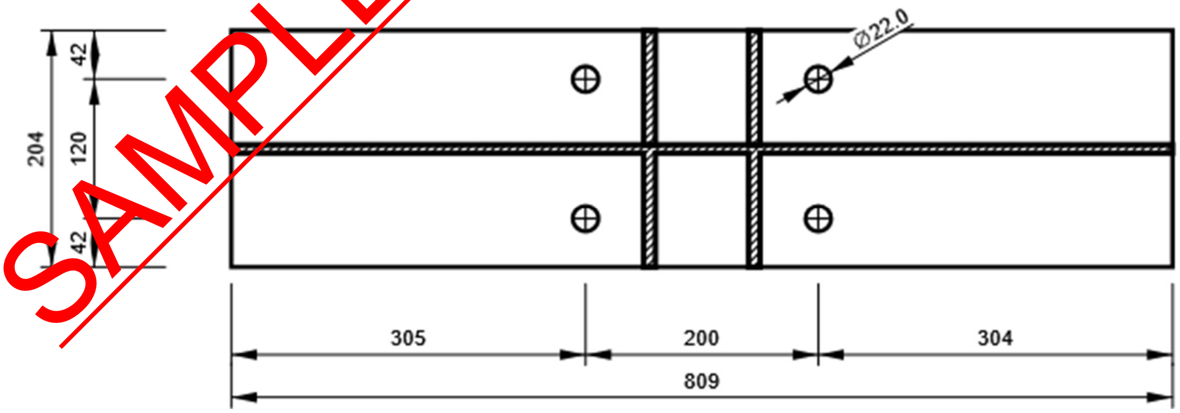

- **Connection-5**

Project data

Project name	
Project number	-
Author	
Description	CONNECTION - 5
Date	
Design code	EN

Material

Steel	S 275
Concrete	C25/30

Project item Connection - 5

Design

Name	Connection - 5
Description	
Analysis	Stress, strain/ simplified loading

Beams and columns

Name	Cross-section	β – Direction [°]	γ - Pitch [°]	α - Rotation [°]	Offset ex [mm]	Offset ey [mm]	Offset ez [mm]	Forces in	X [mm]
M1	1 - UB 203 x 102 x 23	0.0	0.0	0.0	0	0	0	Bolts	0
M2	2 - UC 203 x 203 x 46	90.0	0.0	0.0	-50	0	0	Bolts	50

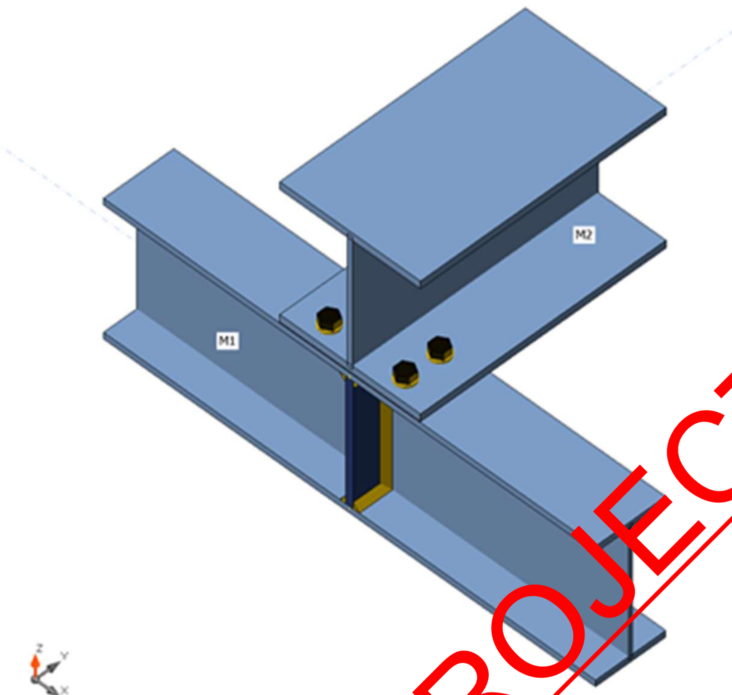

M1
M2

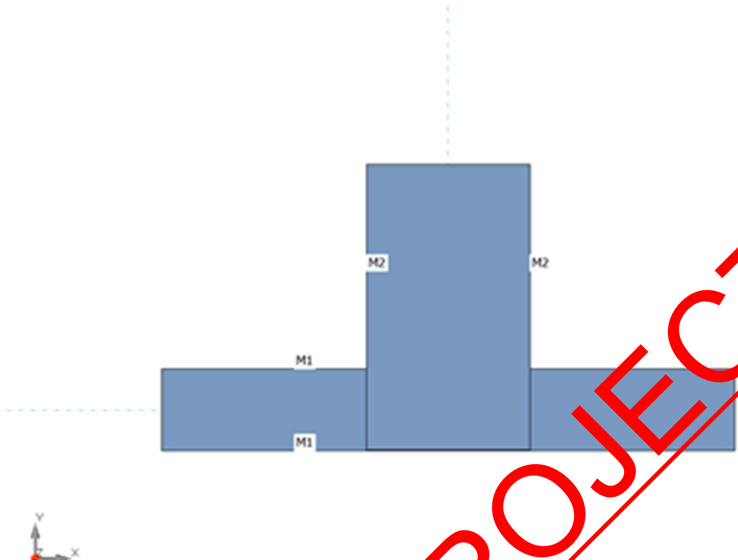

M2
M2
M1
M1
Y
X

PEPP PEARL ENGINEERS, PLANNERS & PROJECT MANAGERS	**Project:** 68 GROVE PARK RD UK		**Sheet No./Rev.** 198
02 TOWERFIELDS WESTERHAM ROAD BROMLEY, BR2 6HF Email: info@Pearlepp.co.uk Website: www. pearlepp.co.uk Tel no. 02035763199	**Job Ref. 2024-06-**	**Structural Engineer** **MM**	**Date** **11/06/2024**

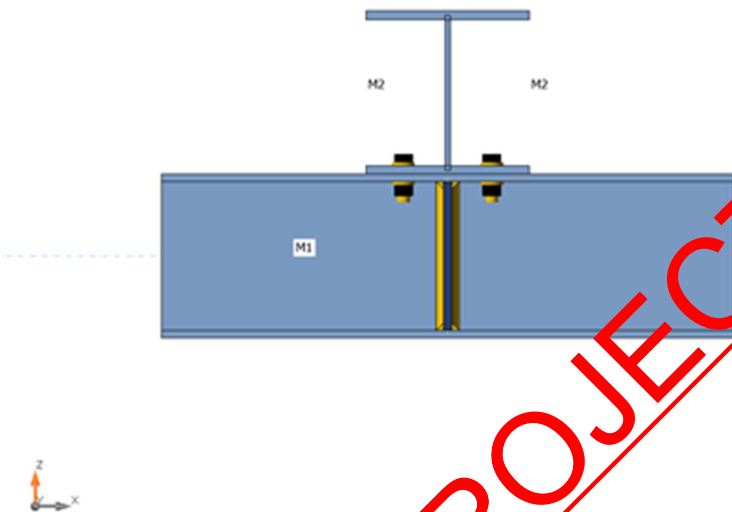

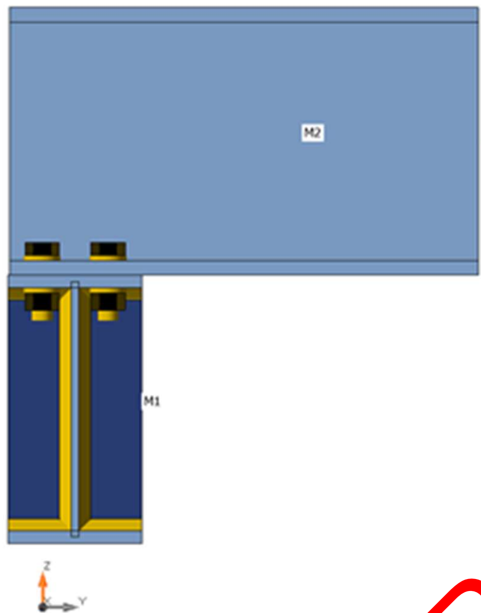

Cross-sections

Name	Material
1 - UB 203 x 102 x 23	S 275
2 - UC 203 x 203 x 46	S 275

Cross-sections

Name	Material	Drawing
1 - UB 203 x 102 x 23	S 275	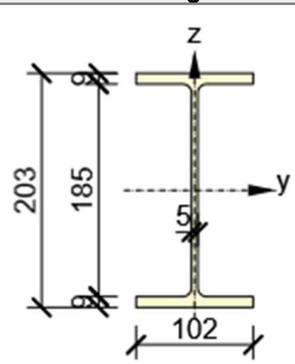

2 - UC 203 x 203 x 46	S 275	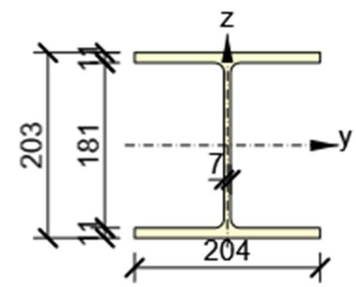

Bolts

Name	Bolt assembly	Diameter [mm]	fu [MPa]	Gross area [mm²]
M16 8.8	M16 8.8	16	800.0	201

Load effects (equilibrium not required)

Name	Member	N [kN]	Vy [kN]	Vz [kN]	Mx [kNm]	My [kNm]	Mz [kNm]
LE1	M2	10.0	0.0	55.0	0.0	4.0	0.0

Check

Summary

Name	Value	Status
Analysis	100.0%	OK
Plates	1.6 < 5.0%	OK
Bolts	37.8 < 100%	OK
Welds	98.5 < 100%	OK
Buckling	37.24	

Plates

Name	Material	Thickness [mm]	Loads	σ_{Ed} [MPa]	ε_{Pl} [%]	σc_{Ed} [MPa]	Status
M1-bfl 1	S 275	9.3	LE1	275.3	0.1	0.0	OK
M1-tfl 1	S 275	9.3	LE1	278.3	1.6	129.3	OK
M1-w 1	S 275	5.4	LE1	275.0	0.0	0.0	OK
M2-bfl 1	S 275	11.0	LE1	275.0	0.0	129.3	OK
M2-tfl 1	S 275	11.0	LE1	30.6	0.0	0.0	OK

M2-w 1	S 275	7.2	LE1	180.6	0.0	0.0	OK
STIFF1a	S 355	10.0	LE1	327.9	0.2	0.0	OK
STIFF1b	S 355	10.0	LE1	102.4	0.0	0.0	OK

Design data

Material	f_y [MPa]	ε_{lim} [%]
S 275	275.0	5.0
S 355	355.0	5.0

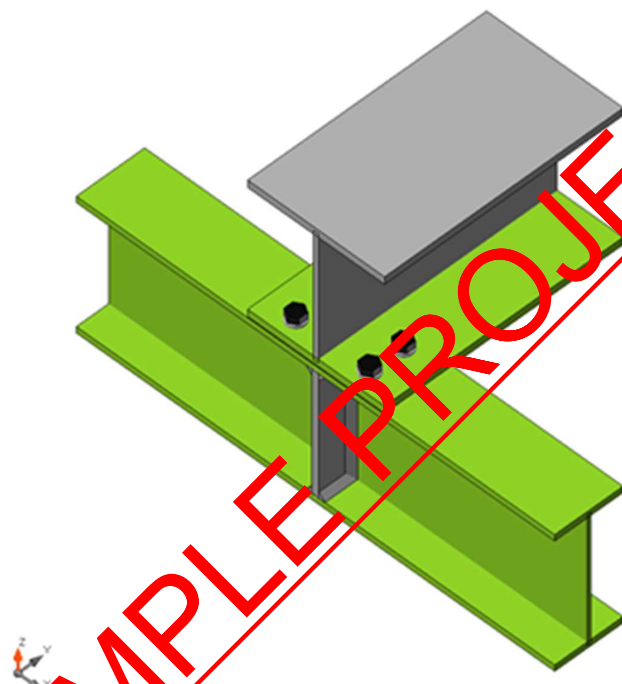

Overall check, LE1

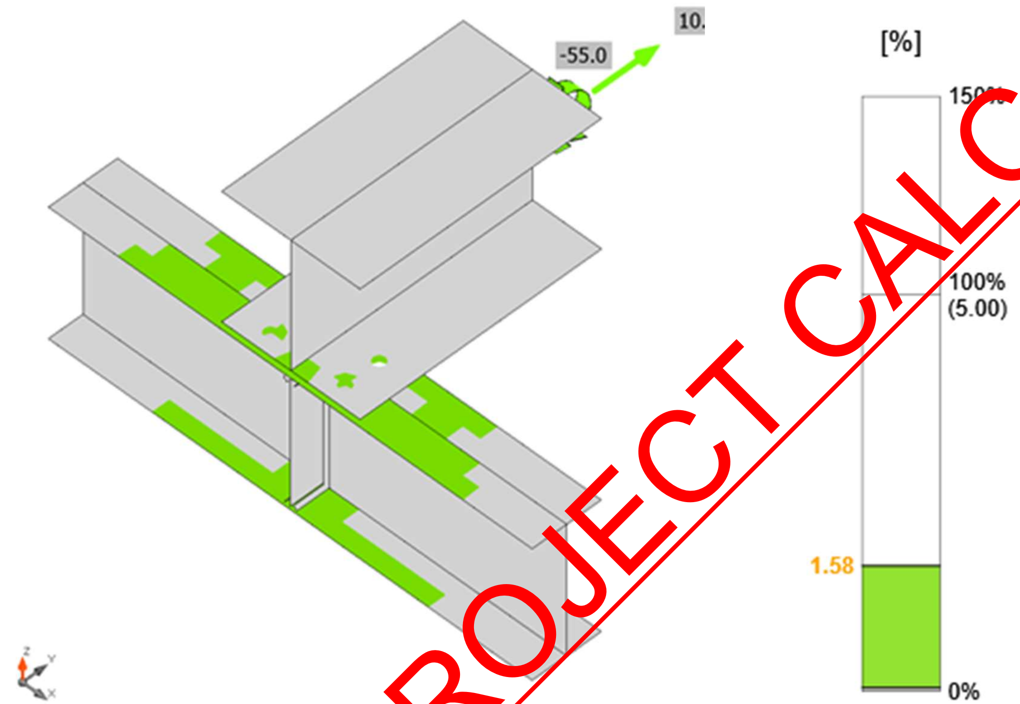

Strain check, LE1

PEPP
PEARL ENGINEERS, PLANNERS & PROJECT MANAGERS
02 TOWERFIELDS WESTERHAM ROAD
BROMLEY, BR2 6HF
Email: info@Pearlepp.co.uk
Website: www. pearlepp.co.uk
Tel no. 02035763199

Project: 68 GROVE PARK RD UK		**Sheet No./Rev.** 203
Job Ref. 2024-06-	**Structural Engineer** **MM**	**Date** **11/06/2024**

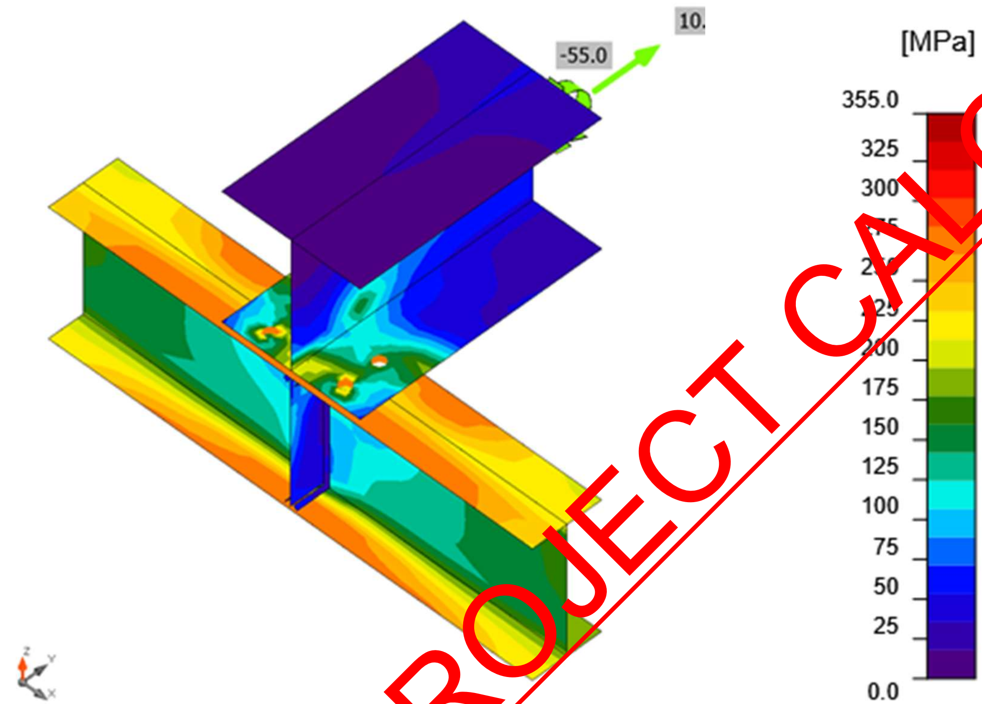

Equivalent stress, LE1

Bolts

	Name	Loads	$F_{t,Ed}$ [kN]	V [kN]	Ut_t [%]	$F_{b,Rd}$ [kN]	Ut_s [%]	Ut_{ts} [%]	Status
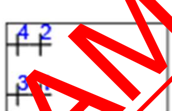	B1	LE1	8.5	4.2	9.4	70.9	6.9	13.6	OK
	B2	LE1	8.5	4.2	9.5	70.9	6.9	13.7	OK
	B3	LE1	27.0	10.0	29.9	80.7	16.5	37.8	OK
	B4	LE1	27.0	10.0	29.8	80.7	16.5	37.8	OK

Design data

Name	$F_{t,Rd}$ [kN]	$B_{p,Rd}$ [kN]	$F_{v,Rd}$ [kN]
M16 8.8 - 1	90.4	150.8	60.3

Detailed result for B3

Tension resistance check (EN 1993-1-8 tab 3.4)

$$F_{t,Rd} = \frac{k_2 f_{ub} A_s}{\gamma_{M2}} = \quad 90.4 \quad \text{kN} \quad \geq \quad F_t = \quad 27.0 \quad \text{kN}$$

where:

- $k_2 = 0.90$ – Factor
- $f_{ub} = 800.0$ MPa – Ultimate tensile strength of the bolt
- $A_s = 157\ \text{mm}^2$ – Tensile stress area of the bolt
- $\gamma_{M2} = 1.25$ – Safety factor

Punching resistance check (EN 1993-1-8 tab 3.4)

$$B_{p,Rd} = \frac{0.6 \pi d_m t_p f_u}{\gamma_{M2}} = \quad 150.8 \quad \text{kN} \quad \geq \quad F_t = \quad 27.0 \quad \text{kN}$$

where:

- $d_m = 25$ mm – The mean of the across points and across flats dimensions of the bolt head or the nut, whichever is smaller
- $t_p = 9$ mm – Thickness
- $f_u = 430.0$ MPa – Ultimate strength
- $\gamma_{M2} = 1.25$ – Safety factor

Shear resistance check (EN 1993-1-8 tab 3.4)

$$F_{v,Rd} = \frac{\beta_p \alpha_v f_{ub} A}{\gamma_{M2}} = \quad 60.3 \quad \text{kN} \quad \geq \quad V = \quad 10.0 \quad \text{kN}$$

where:

- $\beta_p = 1.00$ – Reducing factor
- $\alpha_v = 0.60$ – Reducing factor
- $f_{ub} = 800.0$ MPa – Ultimate tensile strength of the bolt
- $A = 157\ \text{mm}^2$ – Tensile stress area of the bolt
- $\gamma_{M2} = 1.25$ – Safety factor

Bearing resistance check (EN 1993-1-8 tab 3.4)

$$F_{b,Rd} = \frac{k_1 \alpha_b f_u d t}{\gamma_{M2}} = \quad 80.7 \quad \text{kN} \quad \geq \quad V = \quad 10.0 \quad \text{kN}$$

where:

- $k_1 = \min(2.8\frac{e_2}{d_0} - 1.7, 1.4\frac{p_2}{d_0} - 1.7, 2.5) = 2.19$ – Factor for edge distance and bolt spacing perpendicular to the direction of load transfer
- $\alpha_b = \min(\frac{e_1}{3d_0}, \frac{p_1}{3d_0} - \frac{1}{4}, \frac{f_{ub}}{f_u}, 1) = 0.61$ – Factor for end distance and bolt spacing in direction of load transfer
- $e_2 = 25$ mm – Distance to the plate edge perpendicular to the shear force

02 TOWERFIELDS WESTERHAM ROAD
BROMLEY, BR2 6HF
Email: info@Pearlepp.co.uk
Website: www. pearlepp.co.uk
Tel no. 02035763199

p_2 = 50 mm – Distance between bolts perpendicular to the shear force

d_0 = 18 mm – Bolt hole diameter

e_1 = 33 mm – Distance to the plate edge in the direction of the shear force

p_1 = ∞ mm – Distance between bolts in the direction of the shear force

f_{ub} = 800.0 MPa – Ultimate tensile strength of the bolt

f_u = 430.0 MPa – Ultimate strength

d = 16 mm – Nominal diameter of the fastener

t = 11 mm – Thickness of the plate

γ_{M2} = 1.25 – Safety factor

Interaction of tension and shear (EN 1993-1-8 tab 3.4)

$$U_{tts} = \frac{F_{v,Ed}}{F_{v,Rd}} + \frac{F_{t,Ed}}{1.4F_{t,Rd}} = \quad 37.8 \quad \%$$

Utilization in tension

$$U_{tt} = \frac{F_{t,Ed}}{\min(F_{t,Rd}; B_{p,Rd})} = \quad 29.9 \quad \%$$

Utilization in shear

$$U_{ts} = \frac{V_{Ed}}{\min(F_{v,Rd}; F_{b,Rd})} = \quad 16.5 \quad \%$$

Welds (Plastic redistribution)

Item	Edge	Throat th. [mm]	Length [mm]	Loads	$\sigma_{w,Ed}$ [MPa]	ε_{Pl} [%]	$\sigma_\perp$ [MPa]	$\tau_{\|\|}$ [MPa]	$\tau_\perp$ [MPa]	Ut [%]	Ut_c [%]	Status
M1-bfl 1	STIFF1a	◢6.5◣	48	LE1	40.3	0.0	-8.2	-21.2	-8.2	10.0	7.3	OK
		◢6.5◣	48	LE1	40.3	0.0	-8.2	21.2	8.2	10.0	7.3	OK
M1-w 1	STIFF1a	◢6.5◣	185	LE1	212.0	0.0	-11.2	121.8	-11.0	52.4	20.7	OK
		◢6.5◣	185	LE1	211.6	0.0	-11.2	-121.5	11.5	52.3	20.7	OK
M1-tfl 1	STIFF1a	◢6.5◣	48	LE1	398.6	1.2	-144.8	-158.2	-144.7	98.5	88.9	OK
		◢6.5◣	48	LE1	398.6	1.2	-144.6	158.2	144.8	98.5	88.8	OK
M1-bfl 1	STIFF1b	◢6.5◣	48	LE1	64.6	0.0	15.4	32.8	15.4	16.0	10.5	OK
		◢6.5◣	48	LE1	64.5	0.0	15.4	-32.8	-15.4	15.9	10.5	OK

M1-w 1	STIFF1b	◢6.5◣	185	LE1	53.0	0.0	-17.9	-22.5	-17.9	13.1	7.0	OK
		◢6.5◣	185	LE1	53.0	0.0	-18.0	22.5	18.0	13.1	7.0	OK
M1-tfl 1	STIFF1b	◢6.5◣	48	LE1	205.5	0.0	83.2	-70.2	82.7	50.8	32.3	OK
		◢6.5◣	48	LE1	206.4	0.0	83.2	69.9	-83.7	51.0	32.5	OK

Design data

	β_w [-]	$\sigma_{w,Rd}$ [MPa]	0.9 σ [MPa]
S 275	0.85	404.7	309.6

Detailed result for M1-tfl 1 STIFF1a

Weld resistance check (EN 1993-1-8 4.5.3.2)

$\sigma_{w,Rd} = f_u/(\beta_w \gamma_{M2}) =$ 404.7 MPa ≥ $\sigma_{w,Ed} = [\sigma_\perp^2 + 3(\tau_\perp^2 + \tau_\parallel^2)]^{0.5} =$ 398.6 MPa

$\sigma_{\perp,Rd} = 0.9 f_u/\gamma_{M2} =$ 309.6 MPa ≥ $|\sigma_\perp| =$ 144.8 MPa

where:

$f_u =$ 430.0 MPa – Ultimate strength

$\beta_w =$ 0.85 – appropriate correlation factor taken from Table 4.1

$\gamma_{M2} =$ 1.25 – Safety factor

Stress utilization

$U_t = \max(\frac{\sigma_{w,Ed}}{\sigma_{w,Rd}}; \frac{|\sigma_\perp|}{\sigma_{\perp,Rd}}) =$ 98.5 %

Buckling

Loads	Shape	Factor [-]
LE1	1	37.24
	2	48.12
	3	49.24
	4	55.04
	5	55.63
	6	55.69

Bill of material

Manufacturing operations

Name	Plates [mm]	Shape	Nr.	Welds [mm]	Length [mm]	Bolts	Nr.
STIFF1	P10.0x48.2-184.6 (S 355)		2	Double fillet: a = 6.5	562.0		

Welds

Type	Material	Throat thickness [mm]	Leg size [mm]	Length [mm]
Double fillet	S 275	6.5	9.2	562.0

Bolts

Name	Grip length [mm]	Count
M16 8.8	20	4

Drawing

STIFF1

P10.0x185x48 (S 355)

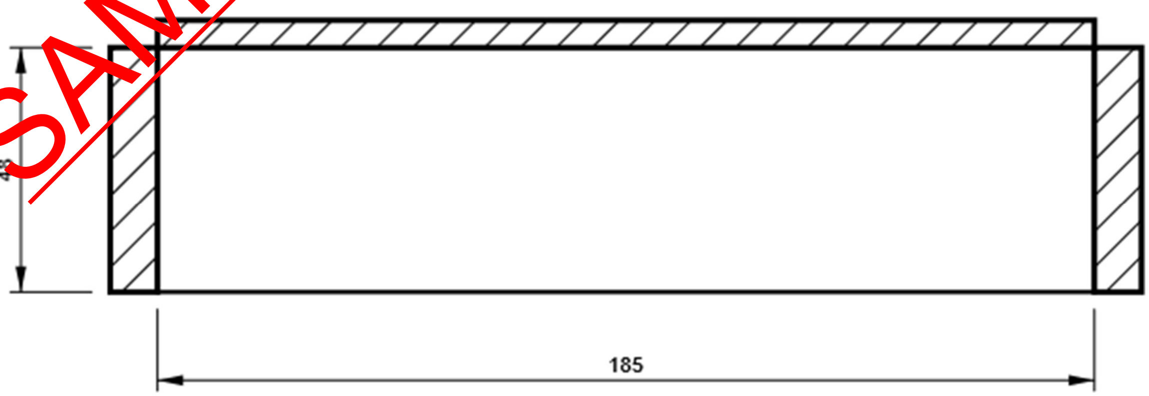

M1, UB 203 x 102 x 23 - Top flange 1:

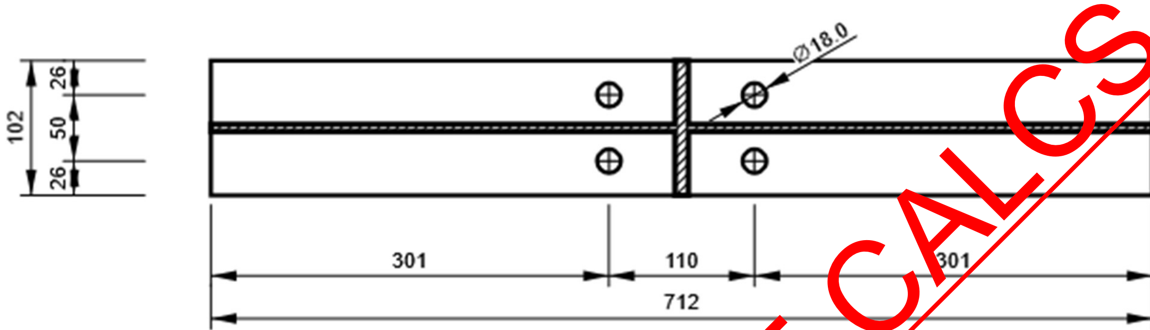

M2, UC 203 x 203 x 46 - Bottom flange 1:

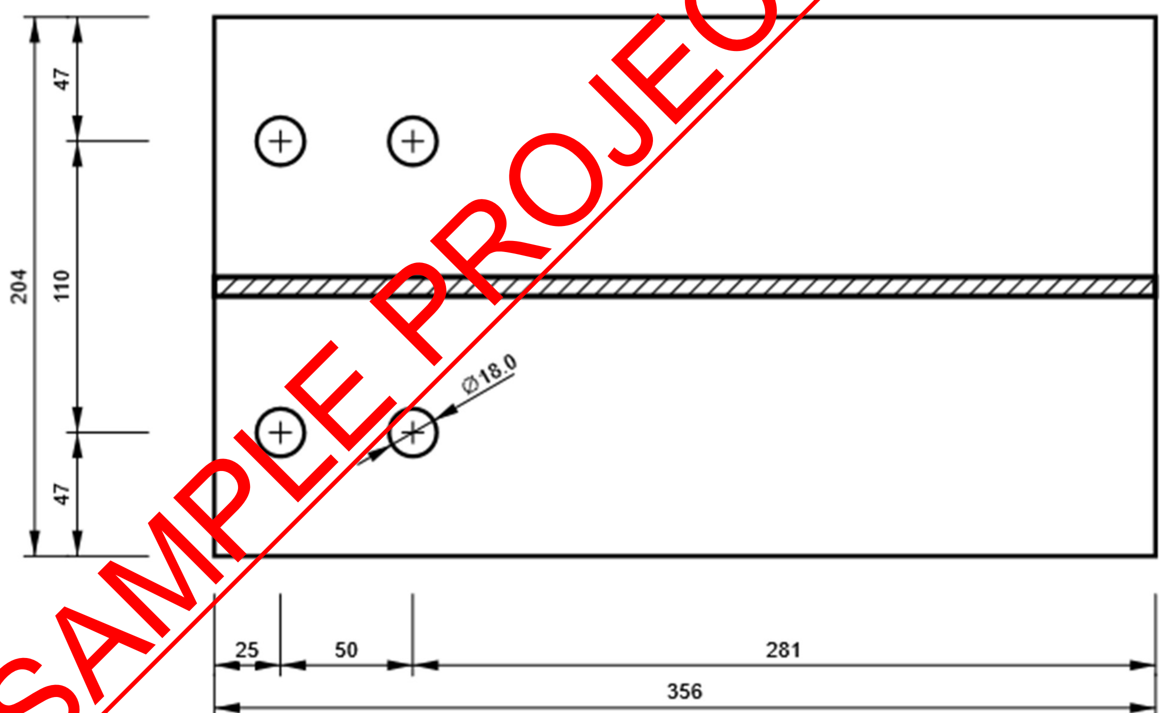

- **Connection-6**

Project data

Project name	
Project number	
Author	
Description	
Date	
Design code	EN

Material

Steel	S 275

Project item CON6

Design

Name	CON6
Description	
Analysis	Stress, strain/ simplified loading

Beams and columns

Name	Cross-section	β – Direction [°]	γ - Pitch [°]	α - Rotation [°]	Offset ex [mm]	Offset ey [mm]	Offset ez [mm]	Forces in
C	3 - SHS100/100/10.0	0.0	-90.0	0.0	0	0	0	Bolts
B	2 - UC 152 x 152 x 30	0.0	0.0	0.0	0	0	0	Bolts

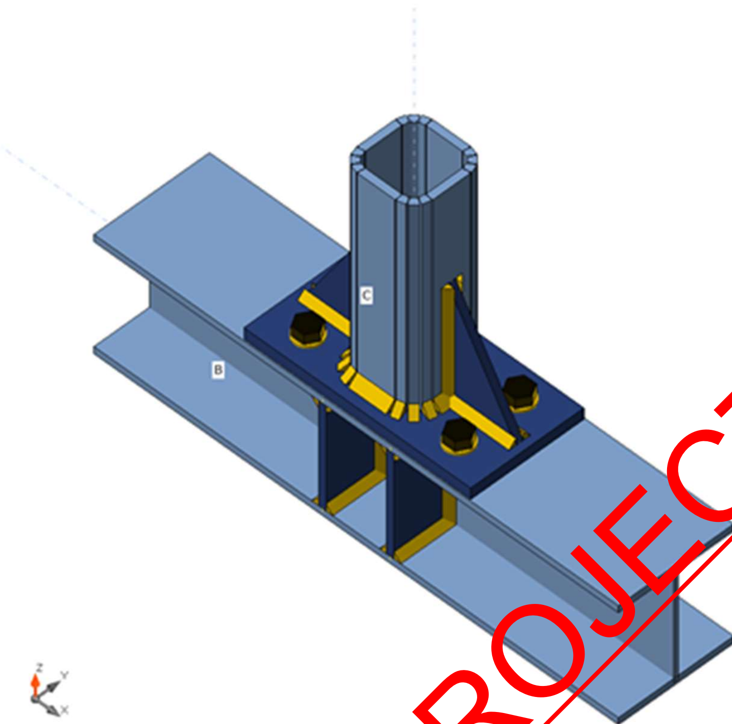

C
B

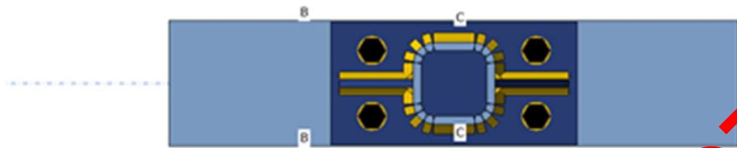
B
C
C
B


Y
X

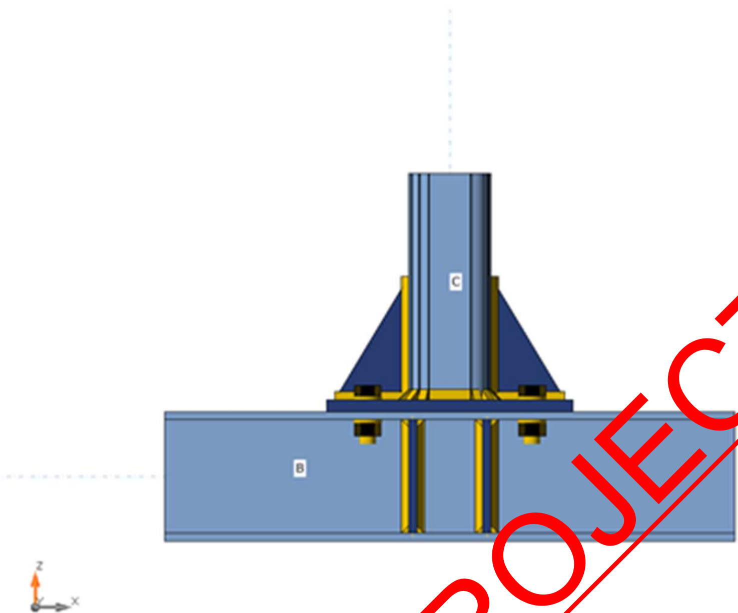

C
B
z
x

02 TOWERFIELDS WESTERHAM ROAD BROMLEY, BR2 6HF Email: info@Pearlepp.co.uk Website: www. pearlepp.co.uk Tel no. 02035763199	**Project:** 68 GROVE PARK RD UK		**Sheet No./Rev.** 213
	Job Ref. 2024-06-	**Structural Engineer** **MM**	**Date** **11/06/2024**

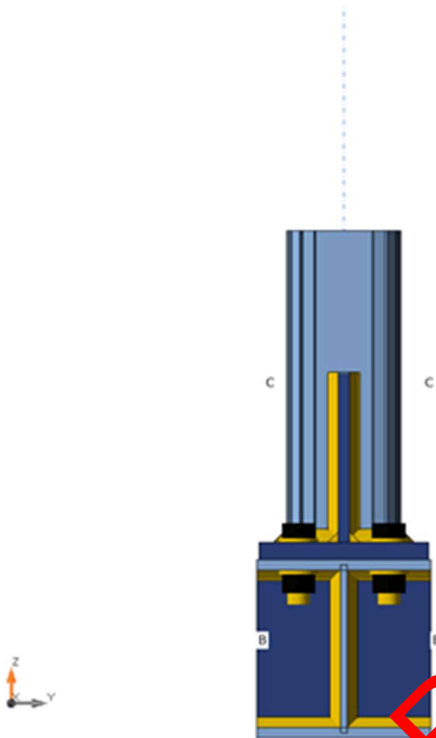

Cross-sections

Name	Material
3 - SHS100/100/10.0	S 275
2 - UC 152 x 152 x 30	S 275

Cross-sections

Name	Material	Drawing
3 - SHS100/100/10.0	S 275	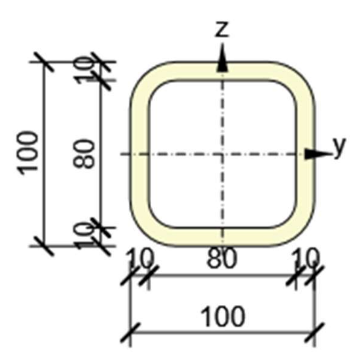

PEPP PEARL ENGINEERS, PLANNERS & PROJECT MANAGERS 02 TOWERFIELDS WESTERHAM ROAD BROMLEY, BR2 6HF Email: info@Pearlepp.co.uk Website: www. pearlepp.co.uk Tel no. 02035763199	**Project:** 68 GROVE PARK RD UK		**Sheet No./Rev.** 214
	Job Ref. 2024-06-	**Structural Engineer** **MM**	**Date** **11/06/2024**

2 - UC 152 x 152 x 30	S 275	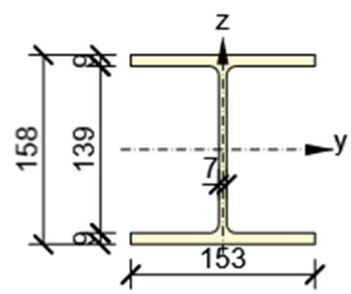

Bolts

Name	Bolt assembly	Diameter [mm]	fu [MPa]	Gross area [mm²]
M20 8.8	M20 8.8	20	800.0	314

Load effects (equilibrium not required)

Name	Member	N [kN]	Vy [kN]	Vz [kN]	Mx [kNm]	My [kNm]	Mz [kNm]
LE1	C	-50.0	0.0	0.0	5.0	5.0	5.0

Check

Summary

Name	Value	Status
Analysis	100.0%	OK
Plates	0.1 < 5.0%	OK
Bolts	25.1 < 100%	OK
Welds	53.3 < 100%	OK
Buckling	87.83	

Plates

Name	Thickness [mm]	Loads	σ_{Ed} [MPa]	ε_{Pl} [%]	σc_{Ed} [MPa]	Status
C	10.0	LE1	159.5	0.0	0.0	OK
B-bfl 1	9.4	LE1	214.7	0.0	0.0	OK
B-tfl 1	9.4	LE1	275.1	0.1	18.1	OK
B-w 1	6.5	LE1	133.6	0.0	0.0	OK
EP1	15.0	LE1	131.9	0.0	18.1	OK

RIB1	10.0	LE1	88.1	0.0	0.0	OK
RIB2	10.0	LE1	150.4	0.0	0.0	OK
STIFF1a	10.0	LE1	109.9	0.0	0.0	OK
STIFF1b	10.0	LE1	65.9	0.0	0.0	OK
STIFF1c	10.0	LE1	164.3	0.0	0.0	OK
STIFF1d	10.0	LE1	83.0	0.0	0.0	OK

Design data

Material	f_y [MPa]	ε_{lim} [%]
S 275	275.0	5.0

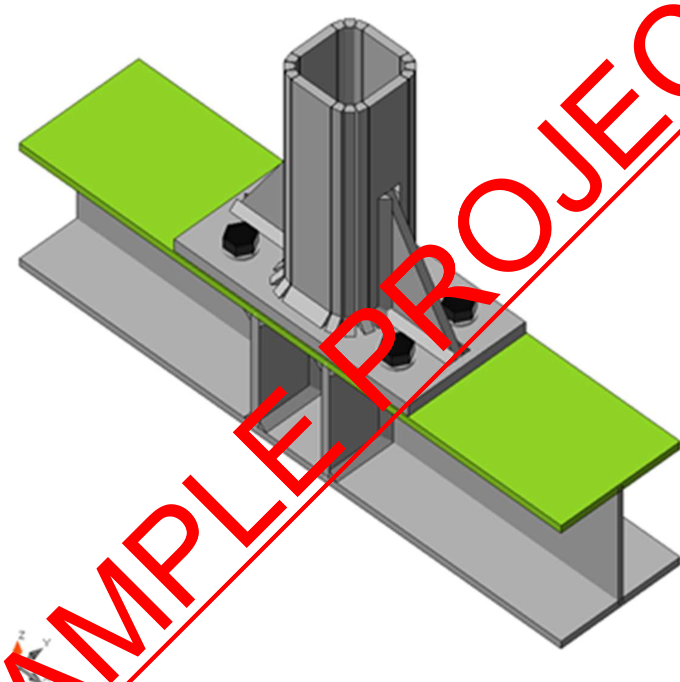

Overall check, LE1

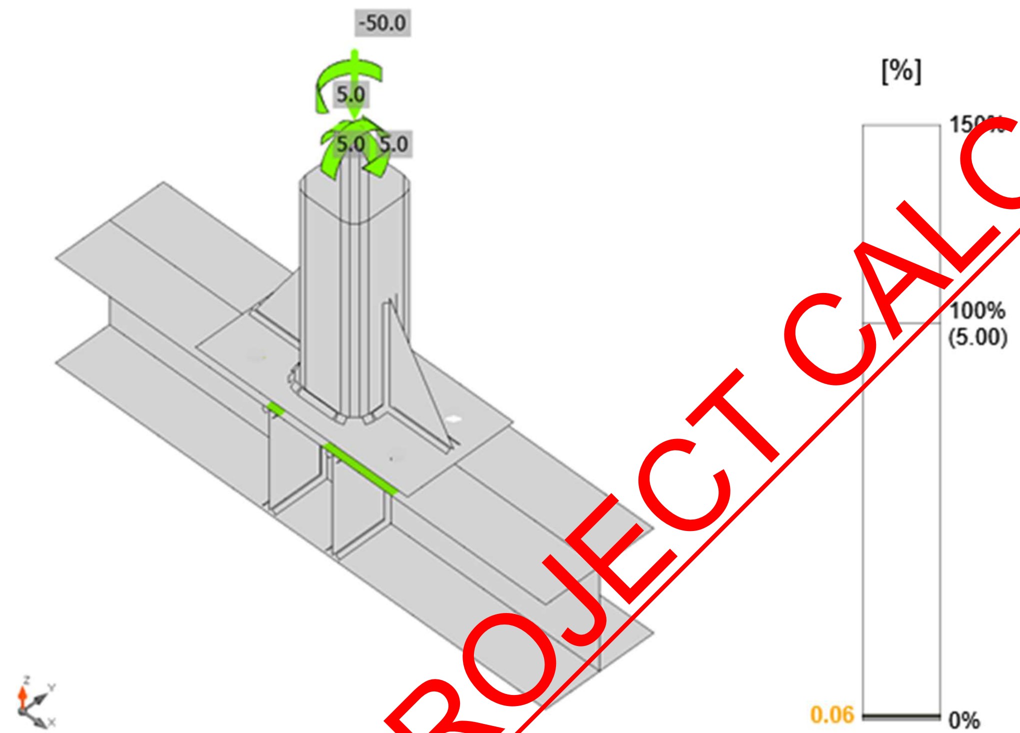

Strain check, LE1

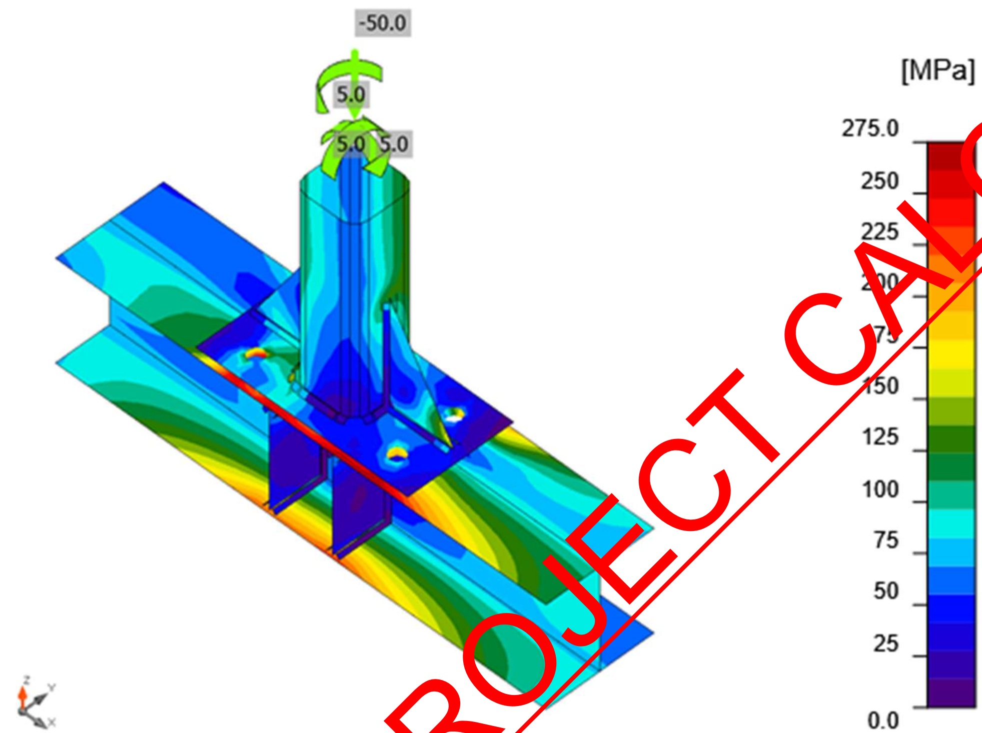

Equivalent stress, LE1

Bolts

	Name	Loads	$F_{t,Ed}$ [kN]	V [kN]	Ut_t [%]	$F_{b,Rd}$ [kN]	Ut_s [%]	Ut_{ts} [%]	Status
	B1	LE1	14.4	11.2	10.2	136.8	11.9	19.2	OK
	B2	LE1	26.9	10.8	19.1	89.3	12.1	25.1	OK
	B3	LE1	2.2	11.9	1.6	89.3	13.3	13.8	OK
	B4	LE1	13.1	13.7	9.2	139.0	14.6	21.2	OK

Design data

Name	$F_{t,Rd}$ [kN]	$B_{p,Rd}$ [kN]	$F_{v,Rd}$ [kN]
M20 8.8 - 1	141.1	192.0	94.1

Detailed result for B2

Tension resistance check (EN 1993-1-8 tab 3.4)

$F_{t,Rd} = \frac{k_2 f_{ub} A_s}{\gamma_{M2}} =$ 141.1 kN ≥ $F_t =$ 26.9 kN

where:

$k_2 = 0.90$ – Factor

$f_{ub} = 800.0$ MPa – Ultimate tensile strength of the bolt

$A_s = 245$ mm^2 – Tensile stress area of the bolt

$\gamma_{M2} = 1.25$ – Safety factor

Punching resistance check (EN 1993-1-8 tab 3.4)

$B_{p,Rd} = \frac{0.6 \pi d_m t_p f_u}{\gamma_{M2}} =$ 192.0 kN ≥ $F_t =$ 26.9 kN

where:

$d_m = 32$ mm – The mean of the across points and across flats dimensions of the bolt head or the nut, whichever is smaller

$t_p = 9$ mm – Thickness

$f_u = 430.0$ MPa – Ultimate strength

$\gamma_{M2} = 1.25$ – Safety factor

Shear resistance check (EN 1993-1-8 tab 3.4)

$F_{v,Rd} = \frac{\beta_p \alpha_v f_{ub} A}{\gamma_{M2}} =$ 94.1 kN ≥ $V =$ 10.8 kN

where:

$\beta_p = 1.00$ – Reducing factor

$\alpha_v = 0.60$ – Reducing factor

$f_{ub} = 800.0$ MPa – Ultimate tensile strength of the bolt

$A = 245$ mm^2 – Tensile stress area of the bolt

$\gamma_{M2} = 1.25$ – Safety factor

Bearing resistance check (EN 1993-1-8 tab 3.4)

$F_{b,Rd} = \frac{k_1 \alpha_b f_u d t}{\gamma_{M2}} =$ 89.3 kN ≥ $V =$ 10.8 kN

where:

$k_1 = \min(2.8\frac{e_2}{d_0} - 1.7, 1.4\frac{p_2}{d_0} - 1.7, 2.5) = 2.50$ – Factor for edge distance and bolt spacing perpendicular to the direction of load transfer

$\alpha_b = \min(\frac{e_1}{3d_0}, \frac{p_1}{3d_0} - \frac{1}{4}, \frac{f_{ub}}{f_u}, 1) = 0.55$ – Factor for end distance and bolt spacing in direction of load transfer

$e_2 = 40$ mm – Distance to the plate edge perpendicular to the shear force

$p_2 = \infty$ mm – Distance between bolts perpendicular to the shear force

$d_0 = 22$ mm – Bolt hole diameter

$e_1 = 36$ mm – Distance to the plate edge in the direction of the shear force

$p_1 = \infty$ mm – Distance between bolts in the direction of the shear force

$f_{ub} = 800.0$ MPa – Ultimate tensile strength of the bolt

$f_u = 430.0$ MPa – Ultimate strength

$d = 20$ mm – Nominal diameter of the fastener

$t = 9$ mm – Thickness of the plate

$\gamma_{M2} = 1.25$ – Safety factor

Interaction of tension and shear (EN 1993-1-8 tab 3.4)

$$U_{tts} = \frac{F_{v,Ed}}{F_{v,Rd}} + \frac{F_{t,Ed}}{1.4F_{t,Rd}} = 25.1 \ \%$$

Utilization in tension

$$U_{tt} = \frac{F_{t,Ed}}{\min(F_{t,Rd}; B_{p,Rd})} = 19.1 \ \%$$

Utilization in shear

$$U_{ts} = \frac{V_{Ed}}{\min(F_{v,Rd}; F_{b,Rd})} = 12.1 \ \%$$

Welds (Plastic redistribution)

Item	Edge	Throat th. [mm]	Length [mm]	Loads	$\sigma_{w,Ed}$ [MPa]	ε_{Pl} [%]	$\sigma_\perp$ [MPa]	$\tau_{\parallel}$ [MPa]	$\tau_\perp$ [MPa]	Ut [%]	Ut_c [%]	Status
EP1	C	◢8.5	324	LE1	215.8	0.0	-140.3	54.0	77.8	53.3	23.5	OK
EP1	RIB1	◢6.5 ◣	90	LE1	46.6	0.0	17.3	20.2	-14.6	11.5	9.4	OK
		◢6.5 ◣	90	LE1	91.3	0.0	12.6	51.2	-10.4	22.6	16.8	OK
C-w 2	RIB1	◢6.5 ◣	150	LE1	45.8	0.0	5.9	24.6	9.1	11.3	3.9	OK
		◢6.5 ◣	150	LE1	51.8	0.0	8.7	-29.0	-5.5	12.8	6.8	OK
EP1	RIB2	◢6.5 ◣	90	LE1	76.4	0.0	-19.9	29.2	-31.1	18.9	10.8	OK
		◢6.5 ◣	90	LE1	102.6	0.0	-45.4	-35.6	39.4	25.3	16.1	OK
C-w 1	RIB2	◢6.5 ◣	150	LE1	71.9	0.0	-10.5	-40.9	-3.3	17.8	8.7	OK

		◢6.5 ◣	150	LE1	62.7	0.0	-4.7	34.1	12.0	15.5	4.2	OK
B-bfl 1	STIFF1 a	◢6.5 ◣	73	LE1	19.2	0.0	-2.8	-10.6	-2.8	4.7	4.1	OK
		◢6.5 ◣	73	LE1	23.8	0.0	-2.4	13.4	2.4	5.9	4.[illegible]	OK
B-w 1	STIFF1 a	◢6.5 ◣	139	LE1	44.8	0.0	-4.1	25.6	-2.8	11.1	9.4	OK
		◢6.5 ◣	139	LE1	40.9	0.0	-0.4	-23.6	1.7	10.[illegible]	8.8	OK
B-tfl 1	STIFF1 a	◢6.5 ◣	73	LE1	106.2	0.0	-49.5	-20.0	-50.4	20.2	17.3	OK
		◢6.5 ◣	73	LE1	113.6	0.0	-54.2	2[illegible].0	53.3	28.1	18.7	OK
B-bfl 1	STIFF1 b	◢6.5 ◣	73	LE1	31.9	0.0	5.1	16.8	6.8	7.9	4.7	OK
		◢6.5 ◣	73	LE1	25.3	0.0	6.8	[illegible]3.1	-5.1	6.2	2.9	OK
B-w 1	STIFF1 b	◢6.5 ◣	139	LE1	15.4	0.0	-3.[illegible]	-7.9	-3.7	3.8	2.8	OK
		◢6.5 ◣	139	LE1	17.2	0.0	-5.7	7.7	5.3	4.2	3.7	OK
B-tfl 1	STIFF1 b	◢6.5 ◣	73	LE1	38.6	0.0	1.7	-22.1	3.2	9.5	7.1	OK
		◢6.5 ◣	73	LE1	44.6	0.0	16.2	-23.8	-2.8	11.0	9.1	OK
B-bfl 1	STIFF1 c	◢6.5 ◣	73	LE1	28.3	0.0	14.0	-12.5	6.8	7.0	5.4	OK
		◢6.5 ◣	73	LE1	23.9	0.0	-15.7	6.1	8.5	5.9	4.2	OK
B-w 1	STIFF1 c	◢6.5 ◣	139	LE1	20.5	0.0	-8.3	10.5	-2.6	5.1	3.2	OK
		◢6.5 ◣	139	LE1	43.4	0.0	-6.2	-24.6	3.0	10.7	9.2	OK
B-tfl 1	STIFF1 c	◢6.5 ◣	73	LE1	127.2	0.0	-67.2	-30.7	-54.2	31.4	17.3	OK
		◢6.5 ◣	73	LE1	73.5	0.0	-24.2	15.1	37.1	18.2	10.1	OK
B-bfl 1	STIFF1 d	◢6.5 ◣	73	LE1	25.0	0.0	12.1	11.3	5.5	6.2	2.7	OK
		◢6.5 ◣	73	LE1	32.2	0.0	-3.0	-18.1	-3.6	7.9	5.3	OK
B-w 1	STIFF1 d	◢6.5 ◣	139	LE1	30.2	0.0	-5.4	-16.6	-4.4	7.5	5.9	OK
		◢6.5 ◣	139	LE1	16.5	0.0	14.1	3.9	-3.1	4.5	2.1	OK
B-tfl 1	STIFF1 d	◢6.5 ◣	73	LE1	57.4	0.0	29.9	18.6	21.3	14.2	10.4	OK

		◢6.5 ◣	73	LE1	34.2	0.0	-2.3	18.7	-6.3	8.5	6.1	OK

Design data

	β_w [-]	$\sigma_{w,Rd}$ [MPa]	0.9 σ [MPa]
S 275	0.85	404.7	309.6

Detailed result for EP1 C

Weld resistance check (EN 1993-1-8 4.5.3.2)

$\sigma_{w,Rd} = f_u/(\beta_w \gamma_{M2}) =$ 404.7 MPa $\geq$ $\sigma_{w,Ed} = [\sigma_\perp^2 + 3(\tau_\perp^2 + \tau_\parallel^2)]^{0.5} =$ 215.8 MPa

$\sigma_{\perp,Rd} = 0.9 f_u/\gamma_{M2} =$ 309.6 MPa $\geq$ $|\sigma_\perp| =$ 140.3 MPa

where:

$f_u =$ 430.0 MPa – Ultimate strength

$\beta_w =$ 0.85 – appropriate correlation factor taken from Table 4.1

$\gamma_{M2} =$ 1.25 – Safety factor

Stress utilization

$U_t = \max(\frac{\sigma_{w,Ed}}{\sigma_{w,Rd}}; \frac{|\sigma_\perp|}{\sigma_{\perp,Rd}}) =$ 53.3 %

Buckling

Loads	Shape	Factor [-]
LE1	1	87.83
	2	95.23
	3	96.57
	4	103.54
	5	104.94
	6	106.58

Bill of material

Manufacturing operations

Name	Plates [mm]	Shape	Nr.	Welds [mm]	Length [mm]	Bolts	Nr.

EP1	P15.0x150.0-300.0 (S 275)	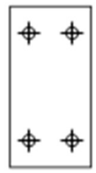	1	Fillet: a = 8.5	324.2	M20 8.8	4
RIB1	P10.0x90.0-150.0 (S 275)		1	Double fillet: a = 6.5	240.0		
RIB2	P10.0x90.0-150.0 (S 275)		1	Double fillet: a = 6.5	240.0		
STIFF1	P10.0x73.2-138.8 (S 275)	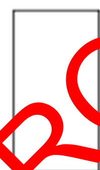	4	Double fillet: a = 6.5	1140.8		

Welds

Type	Material	Throat thickness [mm]	Leg size [mm]	Length [mm]
Fillet	S 275	8.5	12.0	324.2
Double fillet	S 275	6.5	9.2	1620.8

Bolts

Name	Grip length [mm]	Count
M20 8.8	24	4

Drawing

EP1

P15.0x300-150 (S 275)

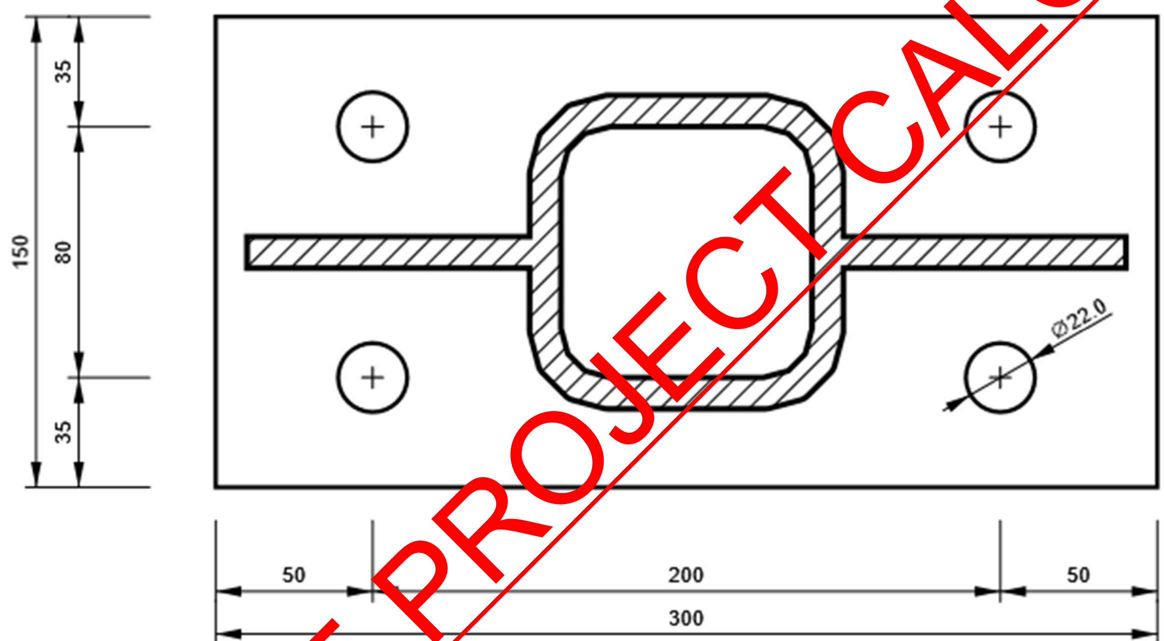

RIB1

P10.0x150-90 (S 275)

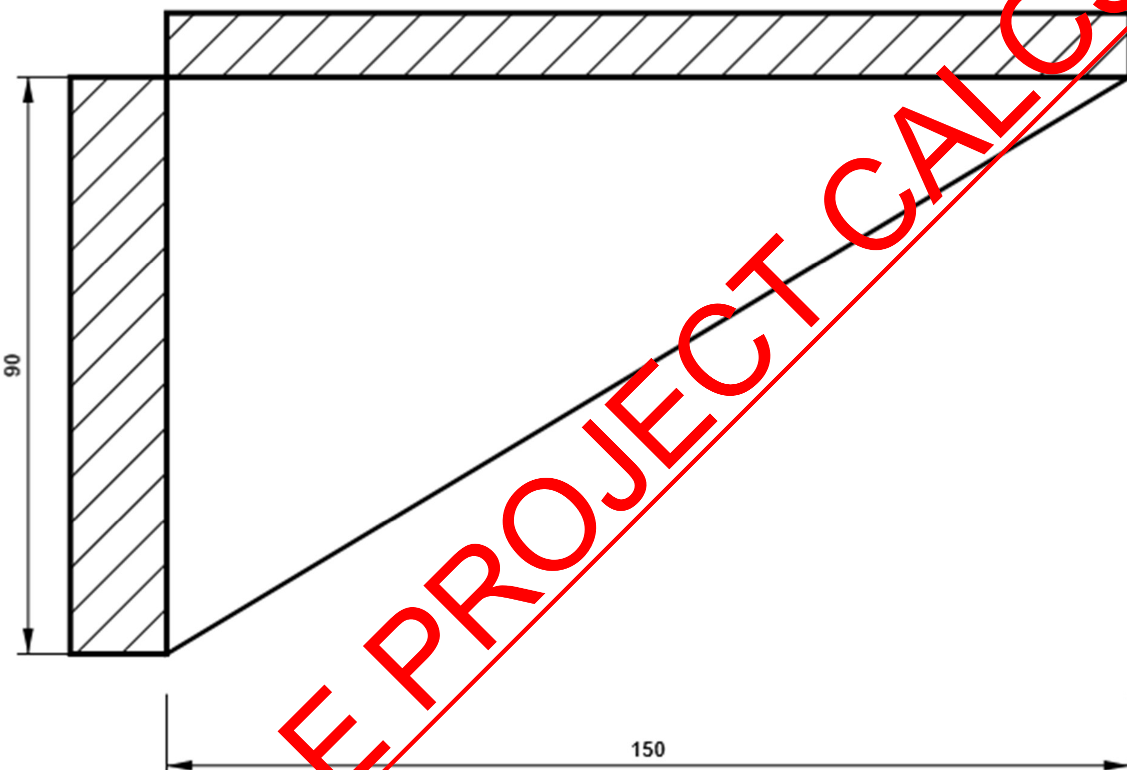

RIB2

P10.0x150-90 (S 275)

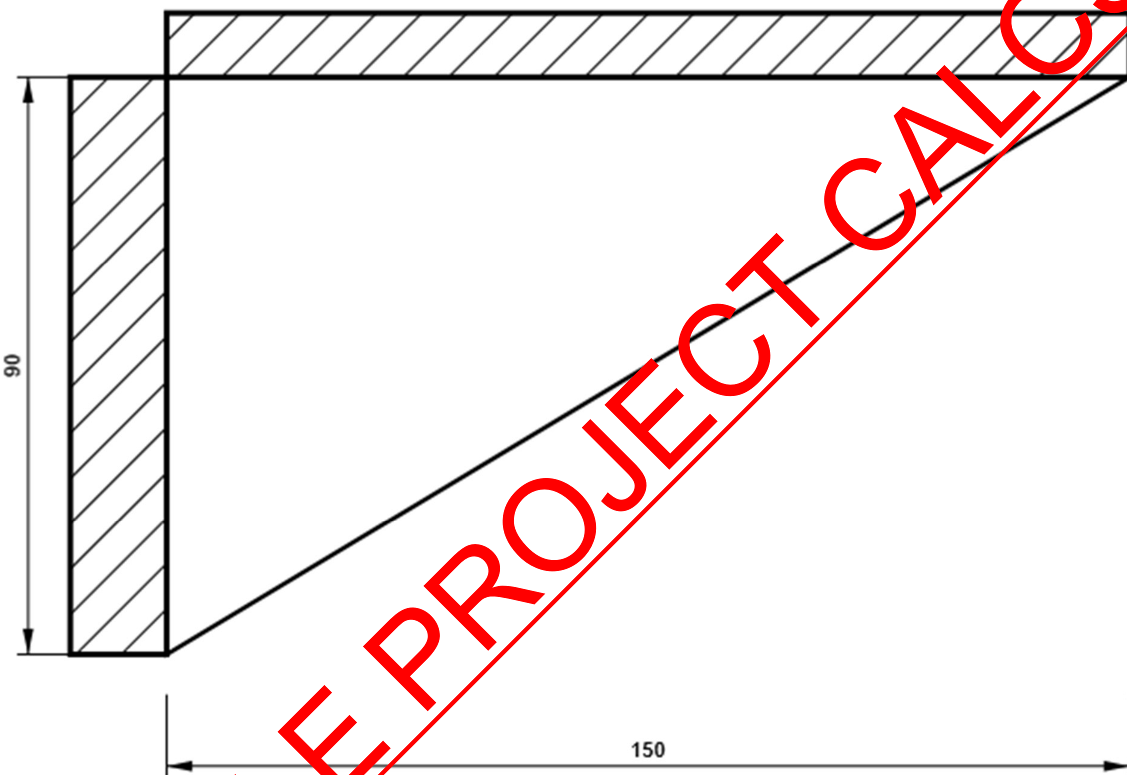

STIFF1

P10.0x139-73 (S 275)

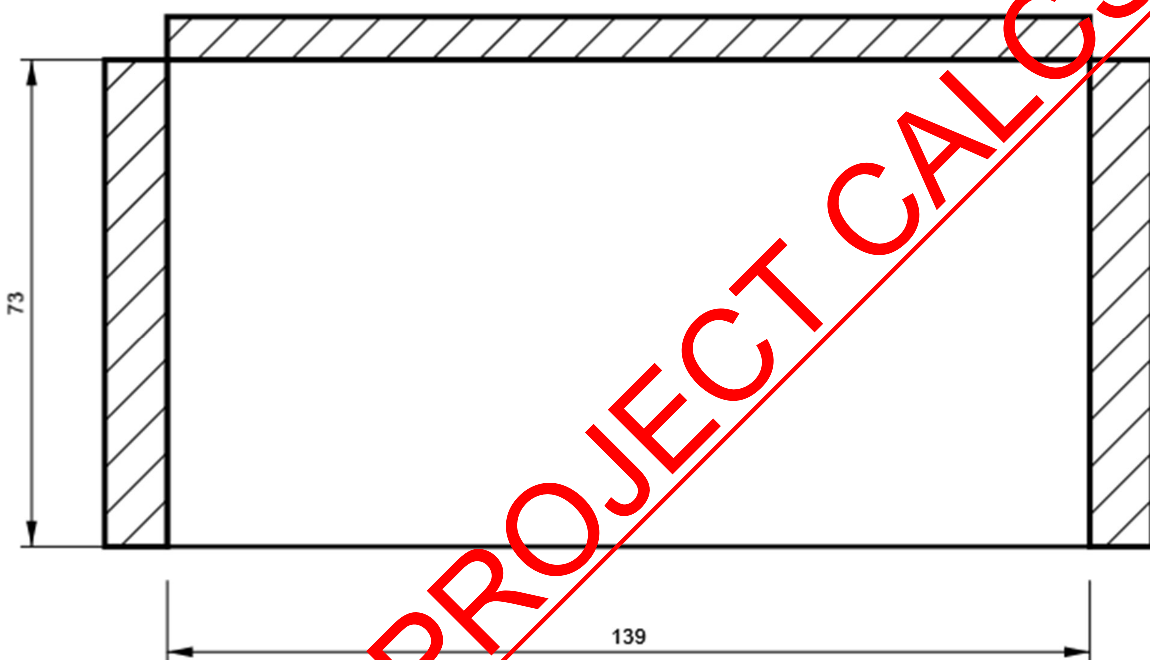

B, UC 152 x 152 x 30 - Top flange 1:

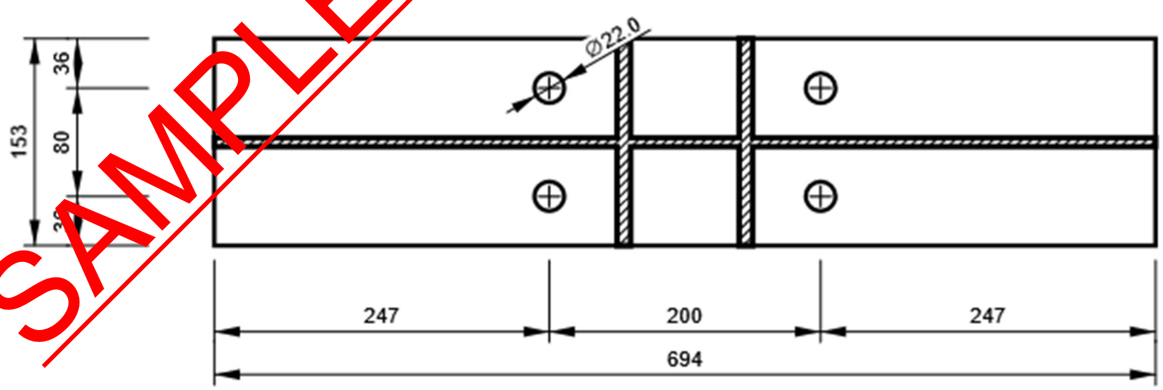

- **Connection-7**

Project data

Project name
Project number
Author
Description
Date
Design code EN

Material

Steel S 275

Project item CON7

Design

Name CON7
Description
Analysis Stress, strain/ simplified loading

Beams and columns

Name	Cross-section	β – Direction [°]	γ - Pitch [°]	α - Rotation [°]	Offset ex [mm]	Offset ey [mm]	Offset ez [mm]	Forces in	X [mm]
C	3 - SHS100/100/10.0	0.0	90.0	0.0	0	0	0	Bolts	0
B	2 - UC 203 x 203 x 46	0.0	0.0	0.0	0	0	0	Bolts	0

M3	3 - SHS100/100/10.0	0.0	-90.0	0.0	0	0	150	Bolts	0
M4	4 - UC 152 x 152 x 23	-90.0	0.0	0.0	0	10	25	Bolts	51

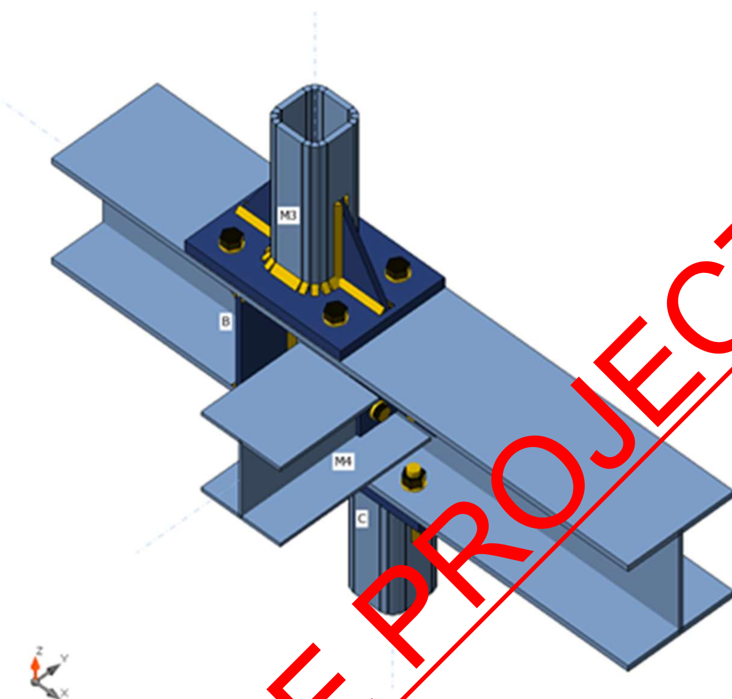

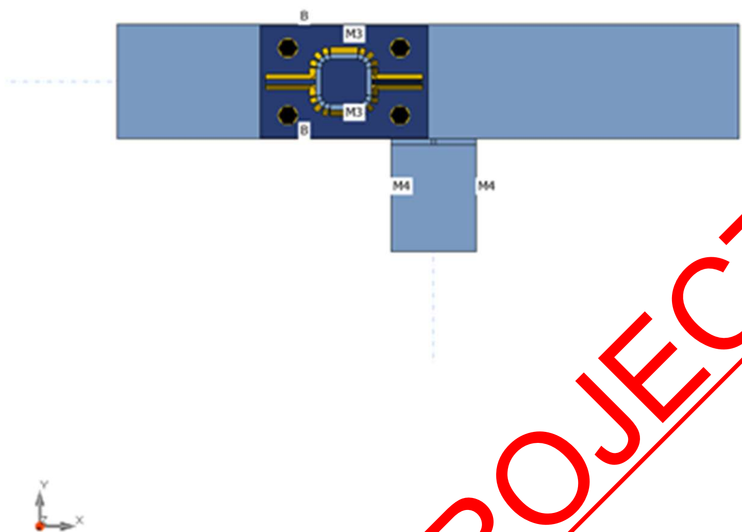

B
M3
M3
B
M4
M4
Y
X

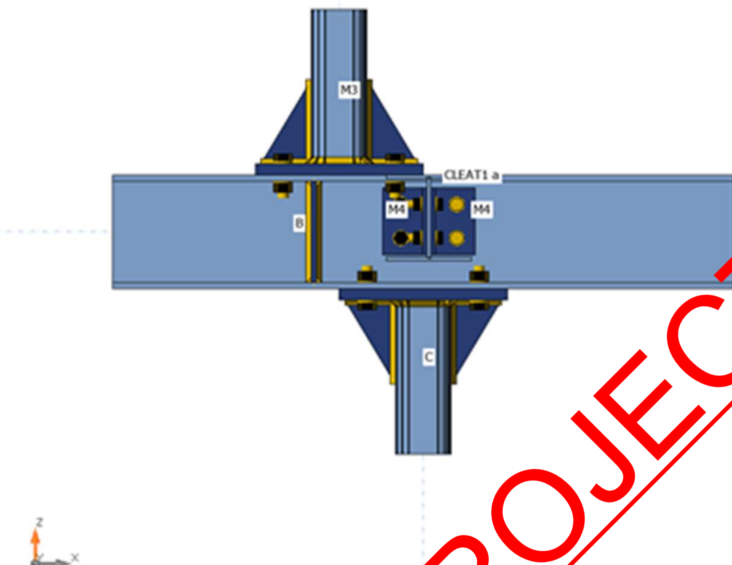

M3
CLEAT1 a
M4
M4
B
C
z
x

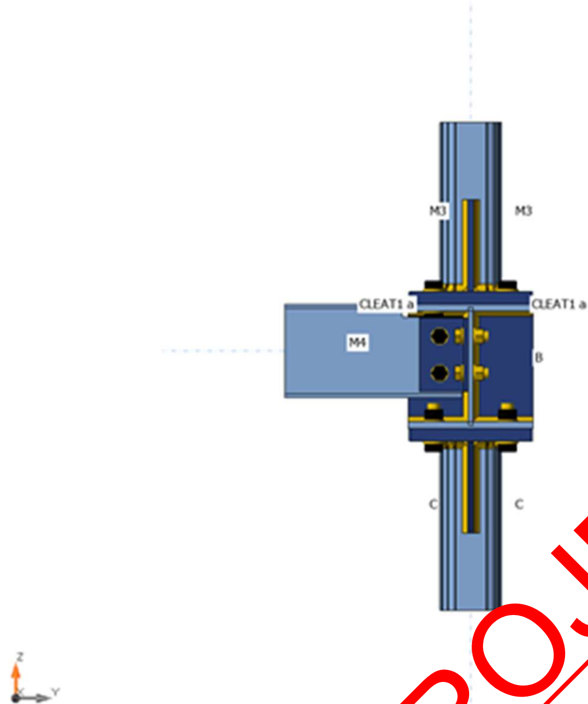

Cross-sections

Name	Material
3 - SHS100/100/10.0	S 275
2 - UC 203 x 203 x 46	S 275
4 - UC 152 x 152 x 23	S 275
5 - L80X8	S 275

Cross-sections

Name	Material	Drawing

3 - SHS100/100/10.0	S 275	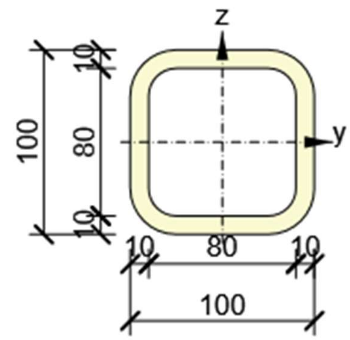
2 - UC 203 x 203 x 46	S 275	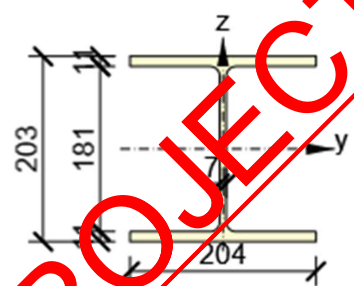
4 - UC 152 x 152 x 23	S 275	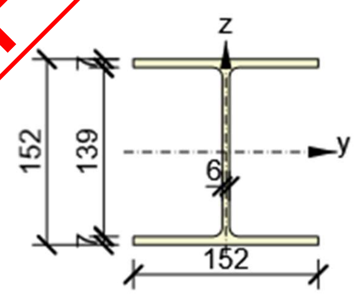
5 - L80X8	S 275	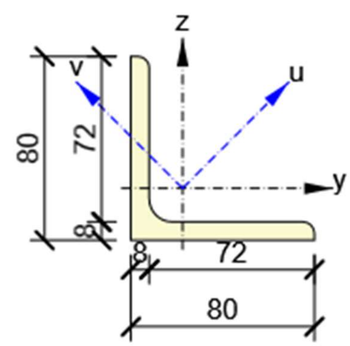

PEPP PEARL ENGINEERS, PLANNERS & PROJECT MANAGERS 02 TOWERFIELDS WESTERHAM ROAD BROMLEY, BR2 6HF Email: info@Pearlepp.co.uk Website: www. pearlepp.co.uk Tel no. 02035763199	**Project:** 68 GROVE PARK RD UK	**Sheet No./Rev.** 233
	Job Ref. 2024-06- / **Structural Engineer** **MM**	**Date** **11/06/2024**

Bolts

Name	Bolt assembly	Diameter [mm]	fu [MPa]	Gross area [mm²]
M20 8.8	M20 8.8	20	800.0	314
M16 8.8	M16 8.8	16	800.0	201

Load effects (equilibrium not required)

Name	Member	N [kN]	Vy [kN]	Vz [kN]	Mx [kNm]	My [kNm]	Mz [kNm]
LE1	B	0.0	0.0	-15.0	0.0	9.0	0.0
	B	0.0	0.0	-12.0	0.0	10.0	0.0
	M3	-20.0	0.0	0.0	0.0	5.0	0.0
	M4	0.0	0.0	-15.0	0.0	0.0	0.0

Check

Summary

Name	Value	Status
Analysis	100.0%	OK
Plates	0.3 < 5.0%	OK
Bolts	38.6 < 100%	OK
Welds	65.6 < 100%	OK
Buckling	28.06	
GMNA	Calculated	

Plates

Name	Thickness [mm]	Loads	σ_{Ed} [MPa]	ε_{Pl} [%]	σc_{Ed} [MPa]	Status
C	10.0	LE1	275.5	0.2	0.0	OK
B-bfl	11.0	LE1	275.2	0.1	31.7	OK
B-tfl 1	11.0	LE1	77.1	0.0	6.8	OK
B-w 1	7.2	LE1	212.2	0.0	78.8	OK
M3	10.0	LE1	122.6	0.0	0.0	OK
M4-bfl 1	6.8	LE1	25.5	0.0	0.0	OK
M4-tfl 1	6.8	LE1	36.5	0.0	0.0	OK
M4-w 1	5.8	LE1	89.9	0.0	19.9	OK
CLEAT1 a-bfl 1	8.0	LE1	102.3	0.0	78.8	OK
CLEAT1 a-w 1	8.0	LE1	100.8	0.0	78.8	OK
CLEAT1 b-bfl 1	8.0	LE1	137.9	0.0	67.0	OK
CLEAT1 b-w 1	8.0	LE1	105.2	0.0	67.0	OK
EP1	20.0	LE1	142.4	0.0	31.7	OK

RIB1	10.0	LE1	275.6	0.3	0.0	OK
RIB2	10.0	LE1	235.3	0.0	0.0	OK
EP2	20.0	LE1	37.0	0.0	6.8	OK
RIB3	10.0	LE1	55.6	0.0	0.0	OK
RIB4	10.0	LE1	112.6	0.0	0.0	OK
STIFF2a	10.0	LE1	94.2	0.0	0.0	OK
STIFF2b	10.0	LE1	64.4	0.0	0.0	OK
STIFF3	10.0	LE1	86.5	0.0	0.0	OK

Design data

Material	f_y [MPa]	ε_{lim} [%]
S 275	275.0	5.0

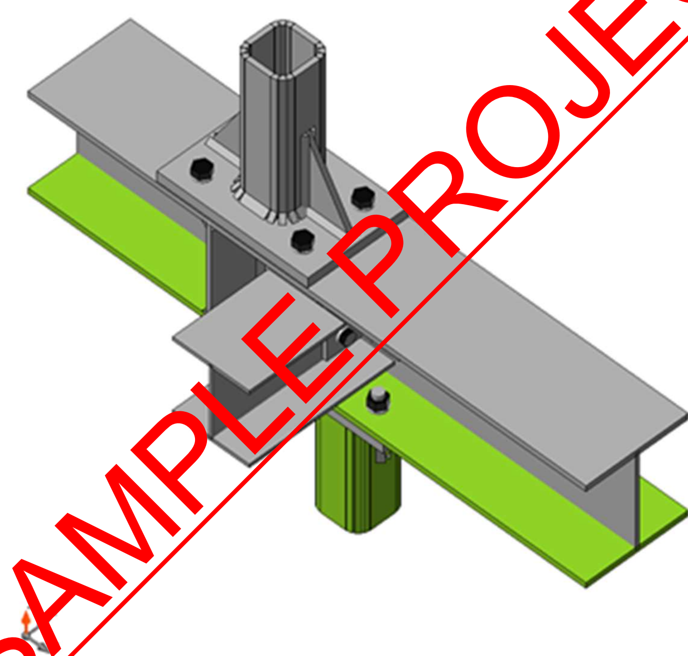

Overall check, LE1

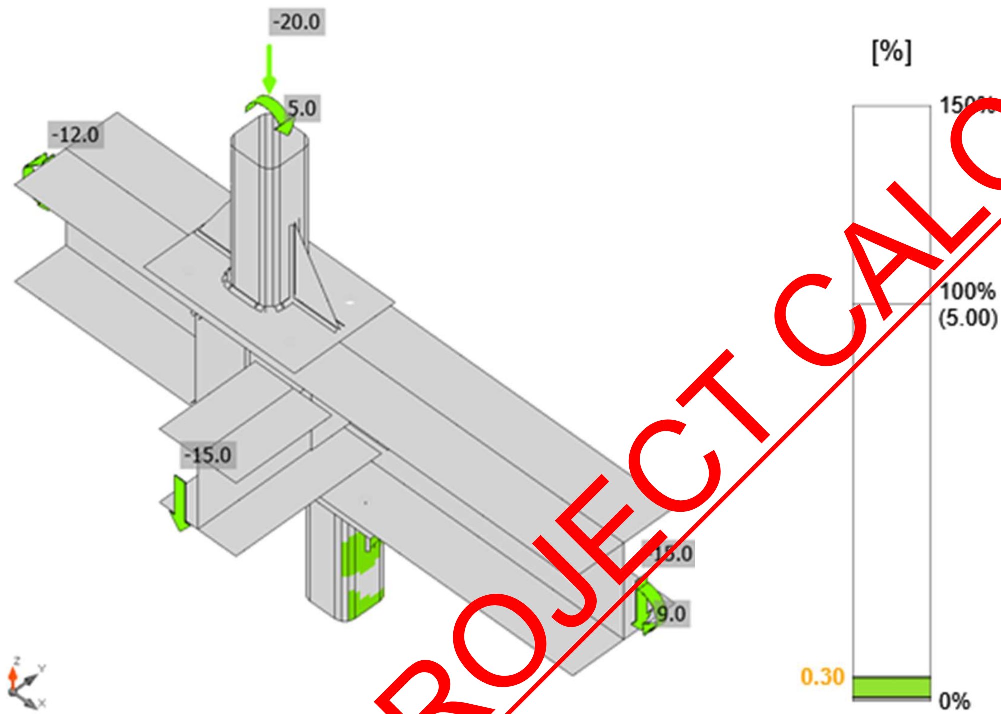

Strain check, LE1

02 TOWERFIELDS WESTERHAM ROAD
BROMLEY, BR2 6HF
Email: info@Pearlepp.co.uk
Website: www. pearlepp.co.uk
Tel no. 02035763199

Project: 68 GROVE PARK RD UK		**Sheet No./Rev.** 236
Job Ref. 2024-06-	**Structural Engineer** **MM**	**Date** **11/06/2024**

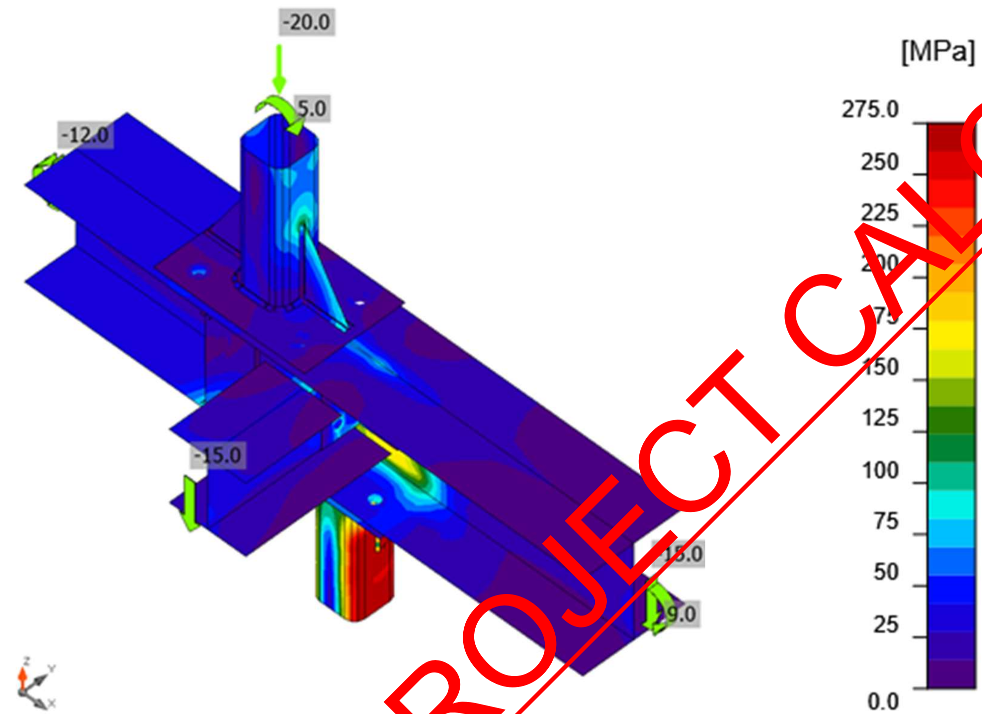

Equivalent stress, LE1

Bolts

	Name	Grade	Loads	$F_{t,Ed}$ [kN]	V [kN]	Ut_t [%]	$F_{b,Rd}$ [kN]	Ut_s [%]	Ut_{ts} [%]	Status
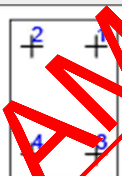	B1	M20 8.8 - 1	LE1	5.0	0.9	3.6	189.2	1.0	3.5	OK
	B2	M20 8.8 - 1	LE1	3.3	0.6	2.4	189.2	0.6	2.3	OK
	B3	M20 8.8 - 1	LE1	54.4	1.0	38.6	119.8	1.1	28.7	OK
	B4	M20 8.8 - 1	LE1	51.4	1.0	36.5	120.1	1.1	27.1	OK
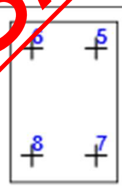	B5	M20 8.8 - 1	LE1	8.8	1.3	6.2	189.2	1.3	5.8	OK
	B6	M20 8.8 - 1	LE1	7.9	1.3	5.6	189.2	1.4	5.3	OK
	B7	M20 8.8 - 1	LE1	0.5	1.4	0.3	189.2	1.5	1.7	OK
	B8	M20 8.8 - 1	LE1	0.9	1.2	0.6	189.2	1.2	1.7	OK
	B9	M16 8.8 - 2	LE1	4.9	4.1	5.4	68.7	11.0	10.6	OK

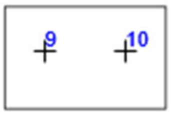	B10	M16 8.8 - 2	LE1	2.9	4.0	3.2	46.7	16.0	8.9	OK
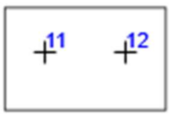	B11	M16 8.8 - 3	LE1	2.4	4.9	2.7	99.1	8.2	10.1	OK
	B12	M16 8.8 - 3	LE1	7.7	3.9	8.6	61.2	6.5	12.6	OK
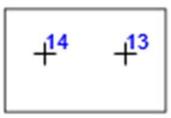	B13	M16 8.8 - 3	LE1	2.5	3.8	2.8	99.1	6.2	8.2	OK
	B14	M16 8.8 - 3	LE1	9.0	3.5	10.0	61.2	5.9	13.0	OK

Design data

Name	$F_{t,Rd}$ [kN]	$B_{p,Rd}$ [kN]	$F_{v,Rd}$ [kN]
M20 8.8 - 1	141.1	224.7	94.1
M16 8.8 - 2	90.4	129.7	60.3
M16 8.8 - 3	90.4	116.7	60.3

Detailed result for B3

Tension resistance check (EN 1993-1-8 tab 3.4)

$F_{t,Rd} = \frac{k_2 f_{ub} A_s}{\gamma_{M2}} =$ 141.1 kN ≥ $F_t =$ 54.4 kN

where:

$k_2 = 0.90$ – Factor

$f_{ub} =$ 800.0 MPa – Ultimate tensile strength of the bolt

$A_s =$ 245 mm^2 – Tensile stress area of the bolt

$\gamma_{M2} = 1.25$ – Safety factor

Punching resistance check (EN 1993-1-8 tab 3.4)

$B_{p,Rd} = \frac{0.6 \pi d_m t_p f_u}{\gamma_{M2}} =$ 224.7 kN ≥ $F_t =$ 54.4 kN

where:

$d_m =$ 32 mm – The mean of the across points and across flats dimensions of the bolt head or the nut, whichever is smaller

$t_p =$ 11 mm – Thickness

$f_u = 430.0$ MPa – Ultimate strength

$\gamma_{M2} = 1.25$ – Safety factor

Shear resistance check (EN 1993-1-8 tab 3.4)

$F_{v,Rd} = \frac{\beta_p \alpha_v f_{ub} A}{\gamma_{M2}} =$ 94.1 kN ≥ $V =$ 1.0 kN

where:

$\beta_p = 1.00$ – Reducing factor

$\alpha_v = 0.60$ – Reducing factor

$f_{ub} = 800.0$ MPa – Ultimate tensile strength of the bolt

$A = 245\ \text{mm}^2$ – Tensile stress area of the bolt

$\gamma_{M2} = 1.25$ – Safety factor

Bearing resistance check (EN 1993-1-8 tab 3.4)

$F_{b,Rd} = \frac{k_1 \alpha_b f_u d t}{\gamma_{M2}} =$ 119.8 kN ≥ $V =$ 1.0 kN

where:

$k_1 = \min(2.8\frac{e_2}{d_0} - 1.7, 1.4\frac{p_2}{d_0} - 1.7, 2.5) = 2.50$ – Factor for edge distance and bolt spacing perpendicular to the direction of load transfer

$\alpha_b = \min(\frac{e_1}{3d_0}, \frac{p_1}{3d_0} - \frac{1}{4}, \frac{f_{ub}}{f_u}, 1) = 0.63$ – Factor for end distance and bolt spacing in direction of load transfer

$e_2 = \infty$ mm – Distance to the plate edge perpendicular to the shear force

$p_2 = 200$ mm – Distance between bolts perpendicular to the shear force

$d_0 = 22$ mm – Bolt hole diameter

$e_1 = 42$ mm – Distance to the plate edge in the direction of the shear force

$p_1 = \infty$ mm – Distance between bolts in the direction of the shear force

$f_{ub} = 800.0$ MPa – Ultimate tensile strength of the bolt

$f_u = 430.0$ MPa – Ultimate strength

$d = 20$ mm – Nominal diameter of the fastener

$t = 11$ mm – Thickness of the plate

$\gamma_{M2} = 1.25$ – Safety factor

Interaction of tension and shear (EN 1993-1-8 tab 3.4)

$U_{tts} = \frac{F_{v,Ed}}{F_{v,Rd}} + \frac{F_{t,Ed}}{1.4F_{t,Rd}} =$ 28.7 %

Utilization in tension

$U_{tt} = \frac{F_{t,Ed}}{\min(F_{t,Rd}; B_{p,Rd})} =$ 38.6 %

Utilization in shear

$U_{ts} = \frac{V_{Ed}}{\min(F_{v,Rd};F_{b,Rd})} =$ 1.1 %

Welds (Plastic redistribution)

Item	Edge	Throat th. [mm]	Length [mm]	Loads	$\sigma_{w,Ed}$ [MPa]	ε_{Pl} [%]	$\sigma_{\perp}$ [MPa]	$\tau_{\|\|}$ [MPa]	$\tau_{\perp}$ [MPa]	Ut [%]	Ut_c [%]	Status
EP1	C	◢8.5	324	LE1	162.1	0.0	-43.5	-0.5	[illegible]	40.0	28.8	OK
EP2	M3	◢8.5	324	LE1	39.0	0.0	-7.9	[illegible]	22.0	9.6	6.7	OK
EP1	RIB1	◢6.5 ◣	90	LE1	261.8	0.0	-96.8	101.6	-96.9	64.7	39.9	OK
		◢6.5 ◣	90	LE1	265.3	0.0	[illegible]	-103.8	97.6	65.6	40.7	OK
C-w 3	RIB1	◢6.5 ◣	150	LE1	206.1	0.0	[illegible]	-111.5	-35.9	50.9	26.7	OK
		◢6.5 ◣	150	LE1	[illegible]	0.0	-35.7	109.9	35.6	50.2	26.6	OK
EP1	RIB2	◢6.5 ◣	90	LE1	[illegible]	0.0	40.3	-32.2	42.0	24.7	17.4	OK
		◢6.5 ◣	90	LE1	109.4	0.0	44.1	39.4	-42.4	27.0	20.6	OK
C-w 1	RIB2	◢6.5 ◣	150	LE1	179.1	0.0	25.2	99.2	25.2	44.3	13.4	OK
		◢6.5 ◣	150	LE1	179.1	0.0	25.2	-99.2	-25.3	44.3	13.2	OK
EP2	RIB3	◢6.5 ◣	90	LE1	18.8	0.0	7.2	-7.3	6.8	4.6	3.6	OK
		◢6.5 ◣	90	LE1	16.1	0.0	7.0	4.3	-7.2	4.0	3.1	OK
M3-w 3	RIB3	◢6.5 ◣	150	LE1	40.0	0.0	5.2	22.3	5.2	9.9	2.4	OK
		◢6.5 ◣	150	LE1	40.0	0.0	5.2	-22.3	-5.2	9.9	2.5	OK
EP2	RIB4	◢6.5 ◣	90	LE1	85.0	0.0	-36.8	23.6	-37.4	21.0	10.8	OK
		◢6.5 ◣	90	LE1	88.0	0.0	-38.0	-26.5	37.4	21.7	11.6	OK
M3-w 1	RIB4	◢6.5 ◣	150	LE1	75.4	0.0	-10.1	-41.9	-10.1	18.6	7.4	OK
		◢6.5 ◣	150	LE1	75.4	0.0	-10.1	41.9	10.1	18.6	7.3	OK
B-bfl 1	STIFF2a	◢6.5 ◣	98	LE1	54.6	0.0	13.2	-27.4	13.6	13.5	11.2	OK

		◢6.5 ◣	98	LE1	42.0	0.0	-5.6	-23.3	5.9	10.4	8.8	OK
B-w 1	STIFF2 a	◢6.5 ◣	181	LE1	11.9	0.0	-8.9	-1.5	-4.2	2.9	1.3	OK
		◢6.5 ◣	181	LE1	13.1	0.0	0.3	-5.3	5.4	3.2	[illegible]	OK
B-tfl 1	STIFF2 a	◢6.5 ◣	98	LE1	10.9	0.0	4.5	-5.7	-0.6	2.7	1.9	OK
		◢6.5 ◣	98	LE1	16.8	0.0	7.3	-6.6	-5.7	4.1	3.4	OK
B-bfl 1	STIFF2 b	◢6.5 ◣	98	LE1	28.0	0.0	-3.5	15.7	[illegible]	6.9	6.0	OK
		◢6.5 ◣	98	LE1	37.6	0.0	7.6	[illegible]	-9.0	9.3	7.7	OK
B-w 1	STIFF2 b	◢6.5 ◣	181	LE1	9.7	0.0	-1.3	4.5	-3.3	2.4	1.5	OK
		◢6.5 ◣	181	LE1	9.1	0.0	-6.8	2.5	2.4	2.2	1.1	OK
B-tfl 1	STIFF2 b	◢6.5 ◣	98	LE1	15.1	0.0	[illegible]	6.7	4.5	3.7	2.9	OK
		◢6.5 ◣	98	LE1	9.3	0.0	-4.4	4.7	0.4	2.3	1.7	OK
B-bfl 1	STIFF3	◢6.5 ◣	98	LE1	37.5	0.0	-5.4	21.2	2.7	9.3	7.4	OK
		◢6.5 ◣	98	LE1	38.1	0.0	21.7	11.9	-13.6	9.4	8.3	OK
B-w 1	STIFF3	◢6.5 ◣	181	LE1	28.3	0.0	-0.5	16.3	-0.9	7.0	4.8	OK
		◢6.5 ◣	181	LE1	19.8	0.0	-7.9	-2.3	10.2	4.9	3.5	OK
B-tfl 1	STIFF3	◢6.5 ◣	98	LE1	16.2	0.0	10.1	-0.2	-7.3	4.0	3.4	OK
		◢6.5 ◣	98	LE1	21.9	0.0	-20.7	2.5	3.4	6.7	4.2	OK

Design data

	β_w [-]	$\sigma_{w,Rd}$ [MPa]	0.9 σ [MPa]
S 275	0.85	404.7	309.6

Detailed result for EP1 RIB1

Weld resistance check (EN 1993-1-8 4.5.3.2)

$\sigma_{w,Rd} = f_u/(\beta_w \gamma_{M2}) =$ 404.7 MPa ≥ $\sigma_{w,Ed} = [\sigma_\perp^2 + 3(\tau_\perp^2 + \tau_\parallel^2)]^{0.5} =$ 265.3 MPa

$\sigma_{\perp,Rd} = 0.9 f_u/\gamma_{M2} =$ 309.6 MPa ≥ $|\sigma_\perp| =$ 97.6 MPa

where:

f_u = 430.0 MPa – Ultimate strength

β_w = 0.85 – appropriate correlation factor taken from Table 4.1

γ_{M2} = 1.25 – Safety factor

Stress utilization

$U_t = \max(\frac{\sigma_{w,Ed}}{\sigma_{w,Rd}}; \frac{|\sigma_\perp|}{\sigma_{\perp,Rd}}) =$ 65.6 %

Buckling

Loads	Shape	Factor [-]
LE1	1	28.06
	2	35.87
	3	45.70
	4	47.05
	5	57.95
	6	58.27

Bill of material

Manufacturing operations

Name	Plates [mm]	Shape	Nr.	Welds [mm]	Length [mm]	Bolts	Nr.
EP1	P20.0x200.0-300.0 (S 275)		1	Fillet: a = 8.5	324.2	M20 8.8	4
RIB1	P10.0x90.0-150.0 (S 275)		1	Double fillet: a = 6.5	240.0		

RIB2	P10.0x90.0-150.0 (S 275)		1	Double fillet: a = 6.5	240.0			
EP2	P20.0x200.0-300.0 (S 275)	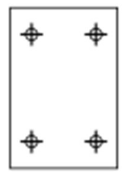	1	Fillet: a = 8.5	324.2	M20 8.8	4	
RIB3	P10.0x90.0-150.0 (S 275)		1	Double fillet: a = 6.5	240.0			
RIB4	P10.0x90.0-150.0 (S 275)	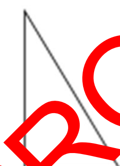	1	Double fillet: a = 6.5	240.0			
STIFF2	P10.0x98.2-181.2 (S 275)	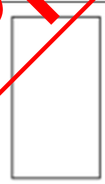	2	Double fillet: a = 6.5	755.2			
CUT1								
STIFF3	P10.0x98.2-181.2 (S 275)		1	Double fillet: a = 6.5	377.6			

Welds

Type	Material	Throat thickness [mm]	Leg size [mm]	Length [mm]
Fillet	S 275	8.5	12.0	648.5
Double fillet	S 275	6.5	9.2	2092.8

Bolts

Name	Grip length [mm]	Count
M20 8.8	31	8
M16 8.8	22	2
M16 8.8	15	4

Drawing

EP1

P20.0x300-200 (S 275)

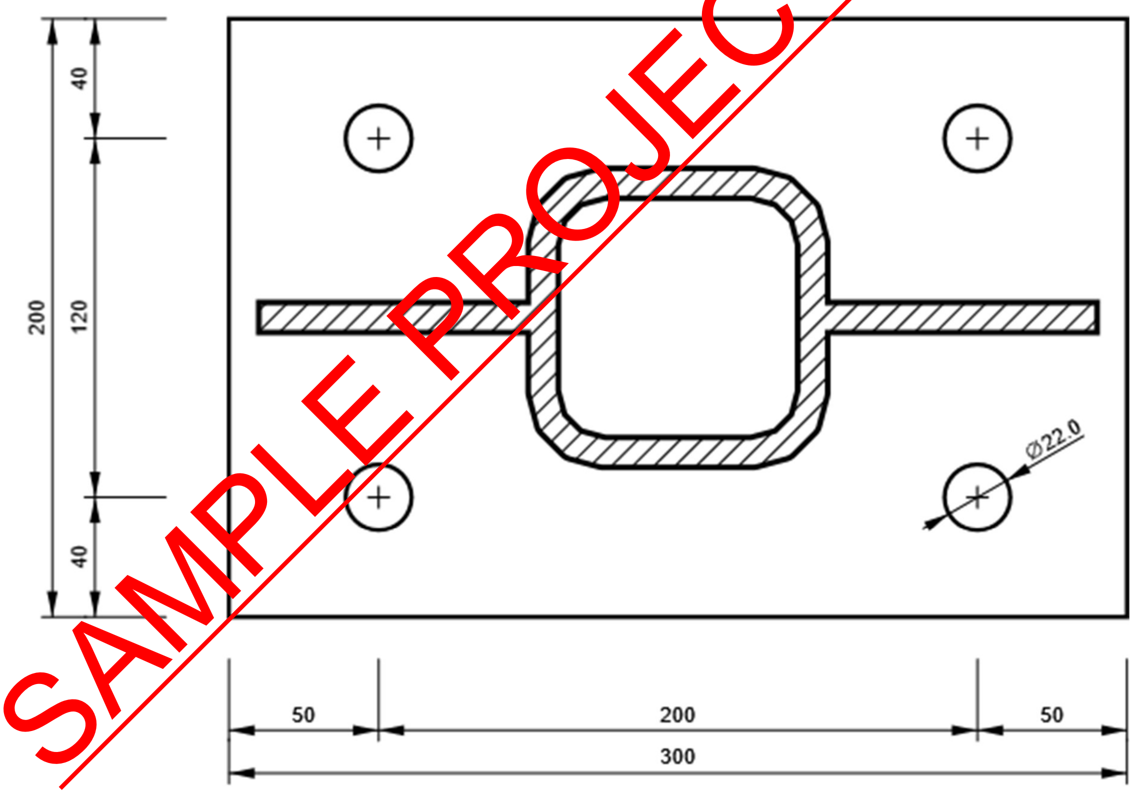

RIB1

P10.0x150-90 (S 275)

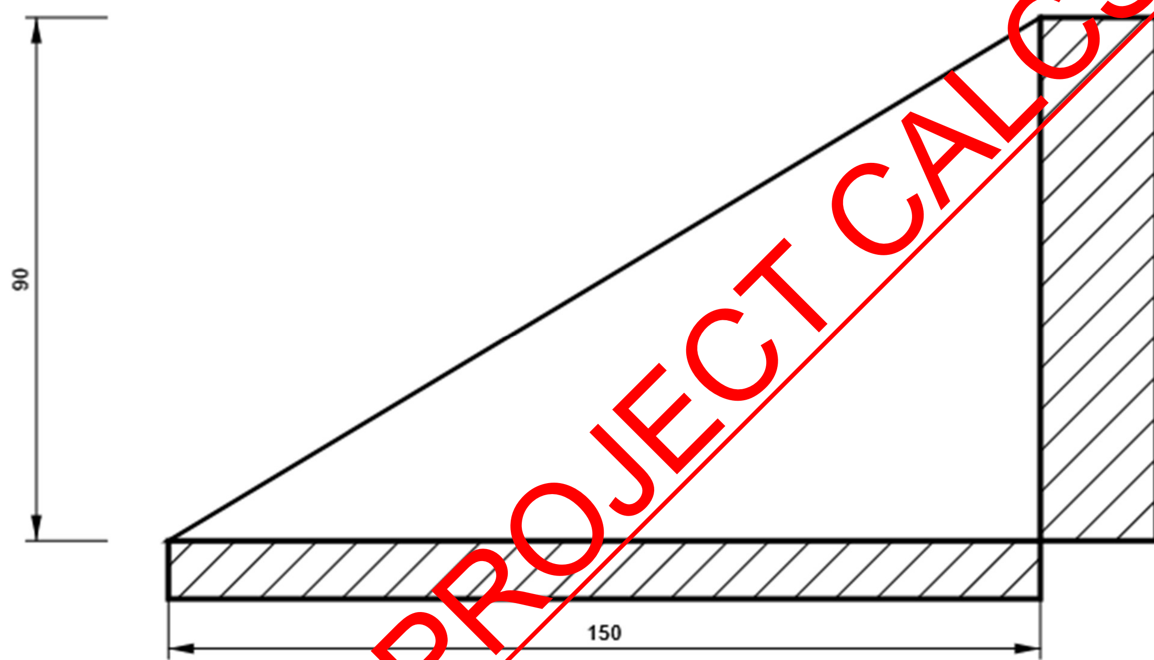

RIB2

P10.0x150-90 (S 275)

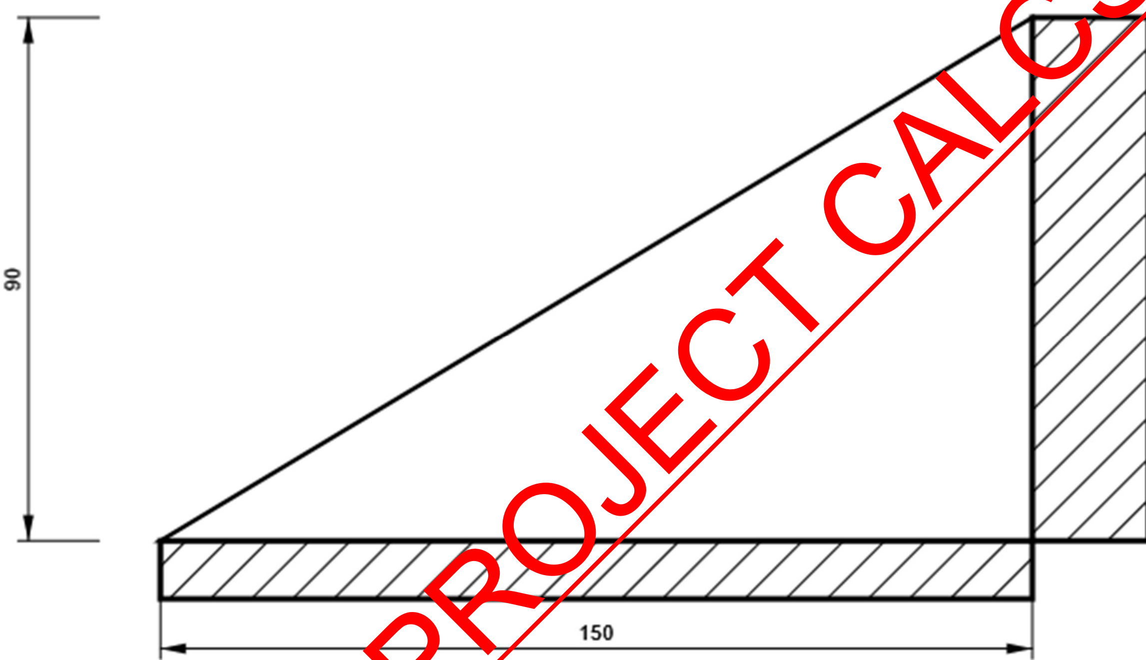

EP2

P20.0x300-200 (S 275)

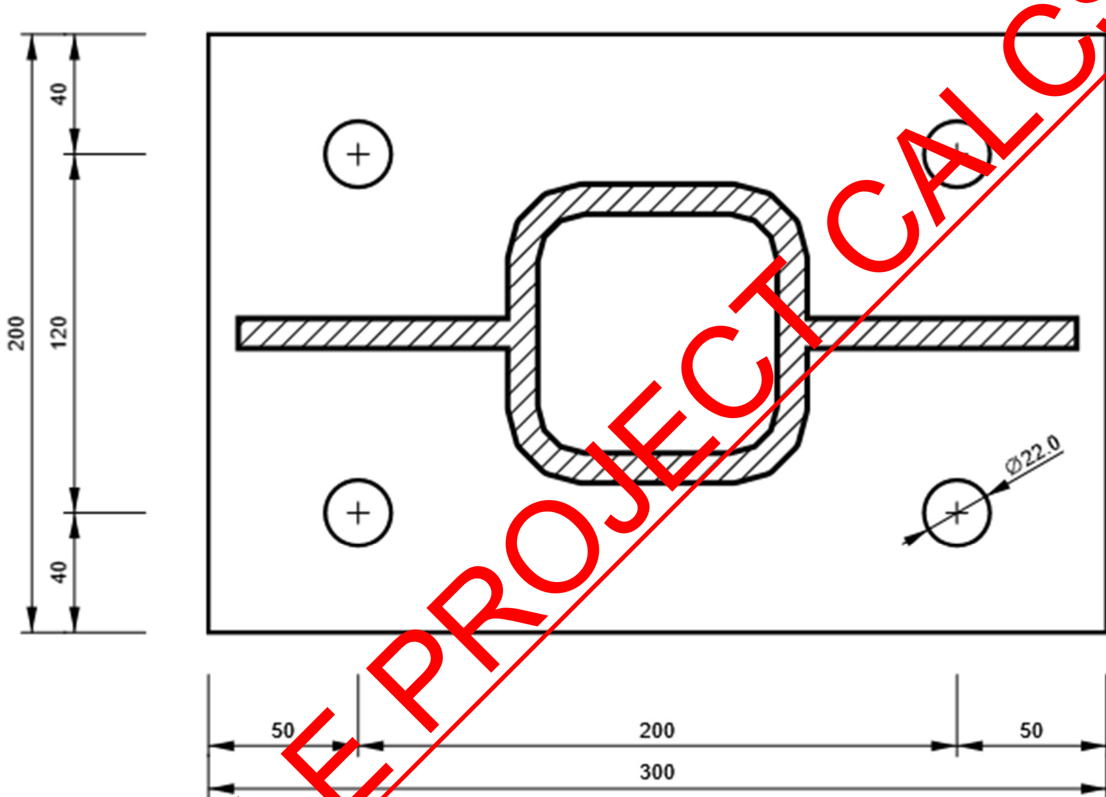

RIB3

P10.0x150-90 (S 275)

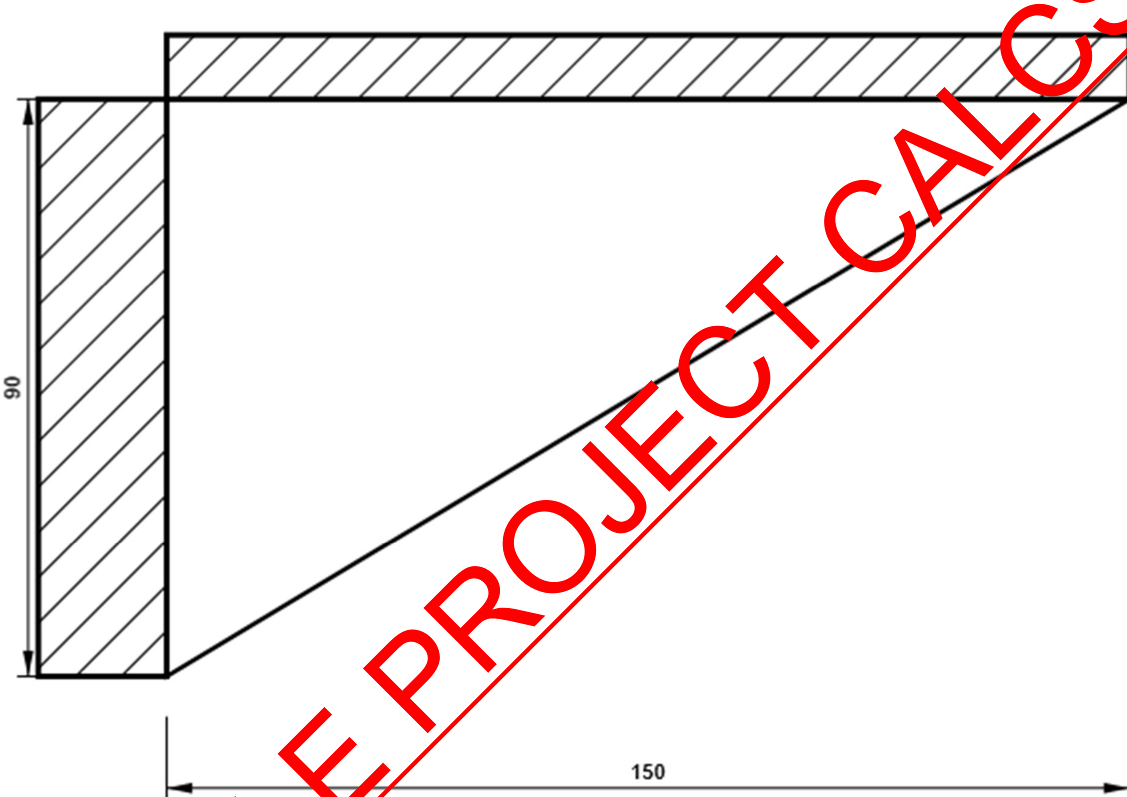

RIB4

P10.0x150-90 (S 275)

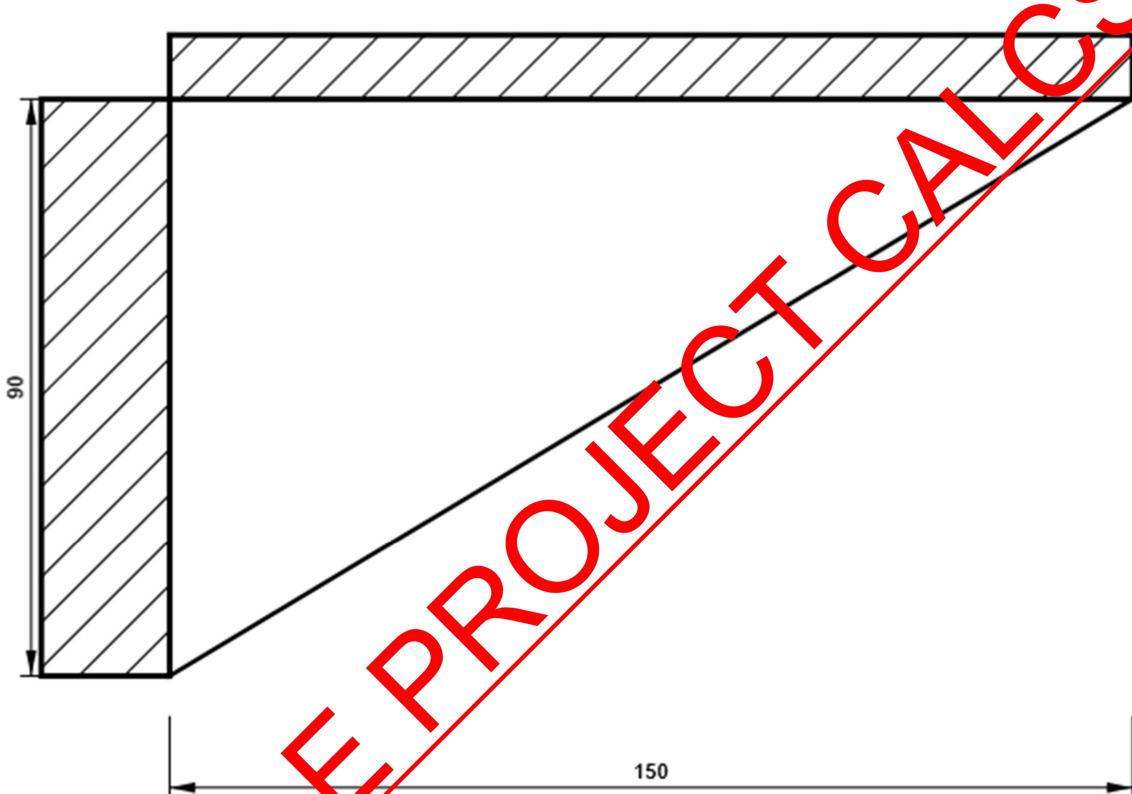

STIFF2

P10.0x181-98 (S 275)

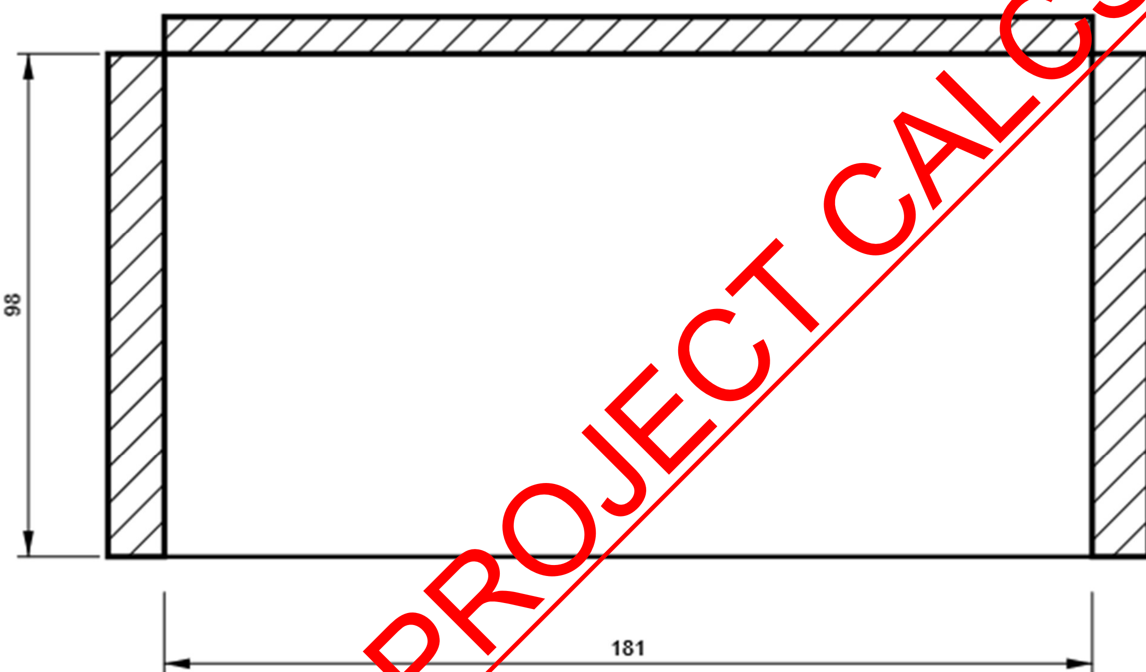

PEPP PEARL ENGINEERS, PLANNERS & PROJECT MANAGERS 02 TOWERFIELDS WESTERHAM ROAD BROMLEY, BR2 6HF Email: info@Pearlepp.co.uk Website: www. pearlepp.co.uk Tel no. 02035763199	**Project:** 68 GROVE PARK RD UK		**Sheet No./Rev.** 250
	Job Ref. 2024-06-	**Structural Engineer** **MM**	**Date** **11/06/2024**

STIFF3

P10.0x181-98 (S 275)

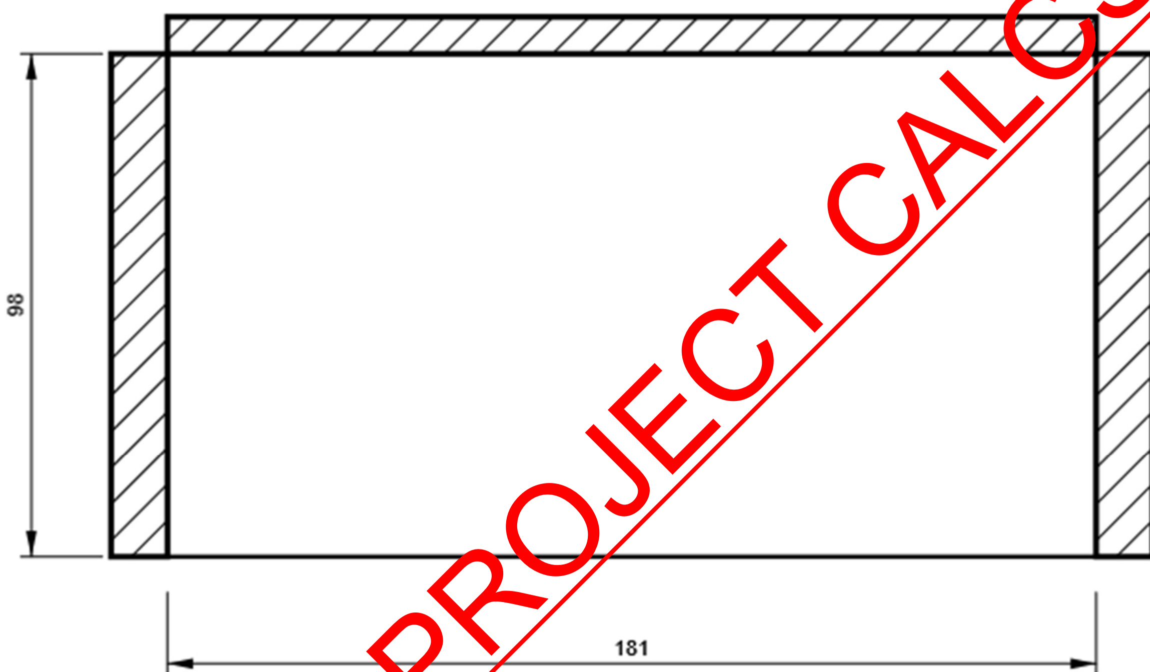

B, UC 203 x 203 x 46 - Bottom flange 1:

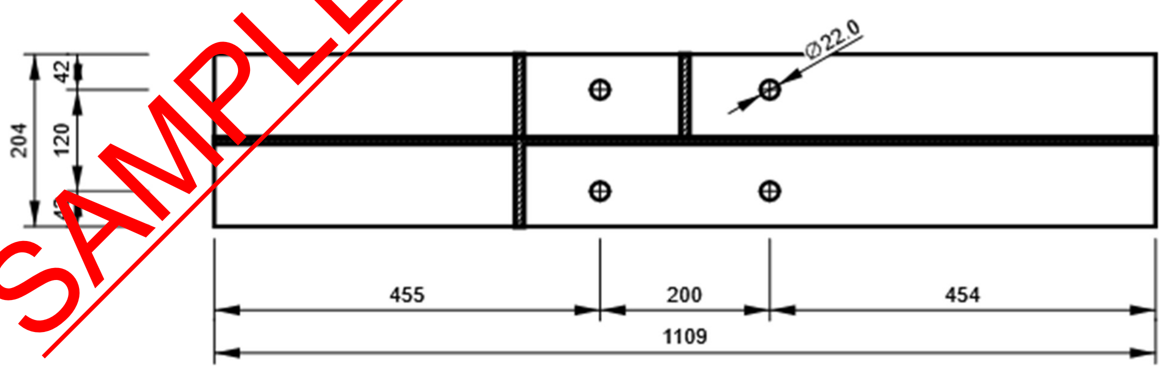

B, UC 203 x 203 x 46 - Top flange 1:

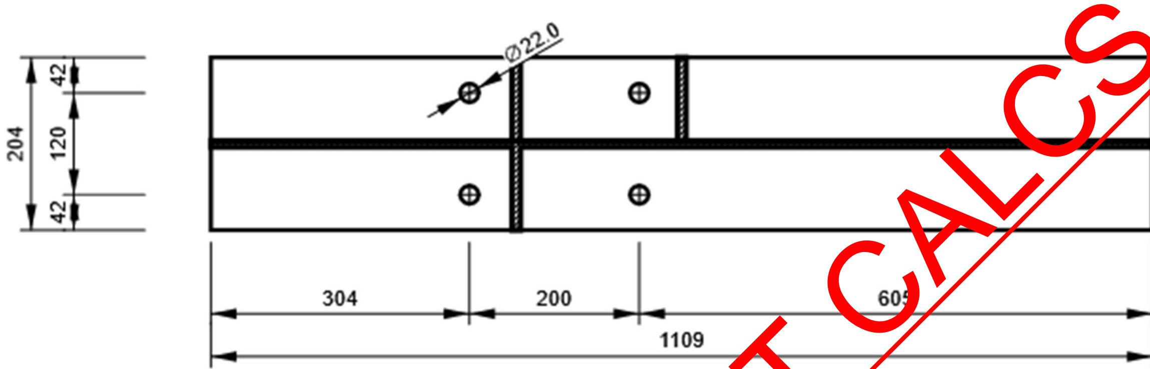

B, UC 203 x 203 x 46 - Web 1:

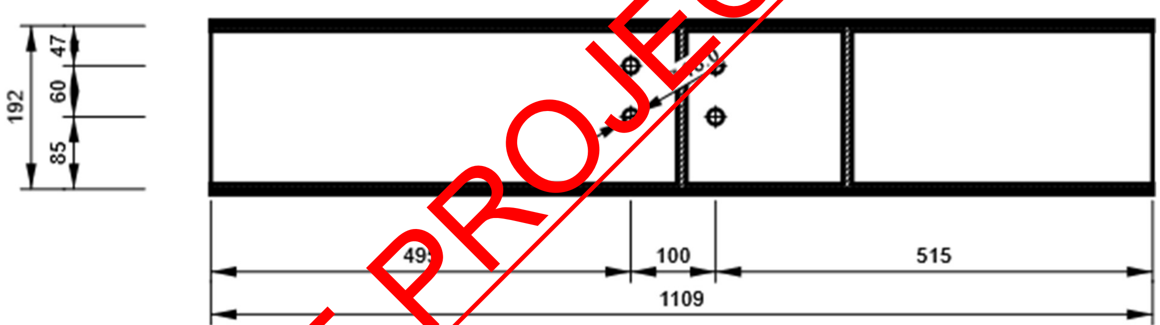

PEPP PEARL ENGINEERS, PLANNERS & PROJECT MANAGERS	**Project:** 68 GROVE PARK RD UK	**Sheet No./Rev.** 252
02 TOWERFIELDS WESTERHAM ROAD BROMLEY, BR2 6HF Email: info@Pearlepp.co.uk Website: www. pearlepp.co.uk Tel no. 02035763199	**Job Ref. 2024-06-** | **Structural Engineer MM**	**Date 11/06/2024**

M4, UC 152 x 152 x 23 - Web 1:

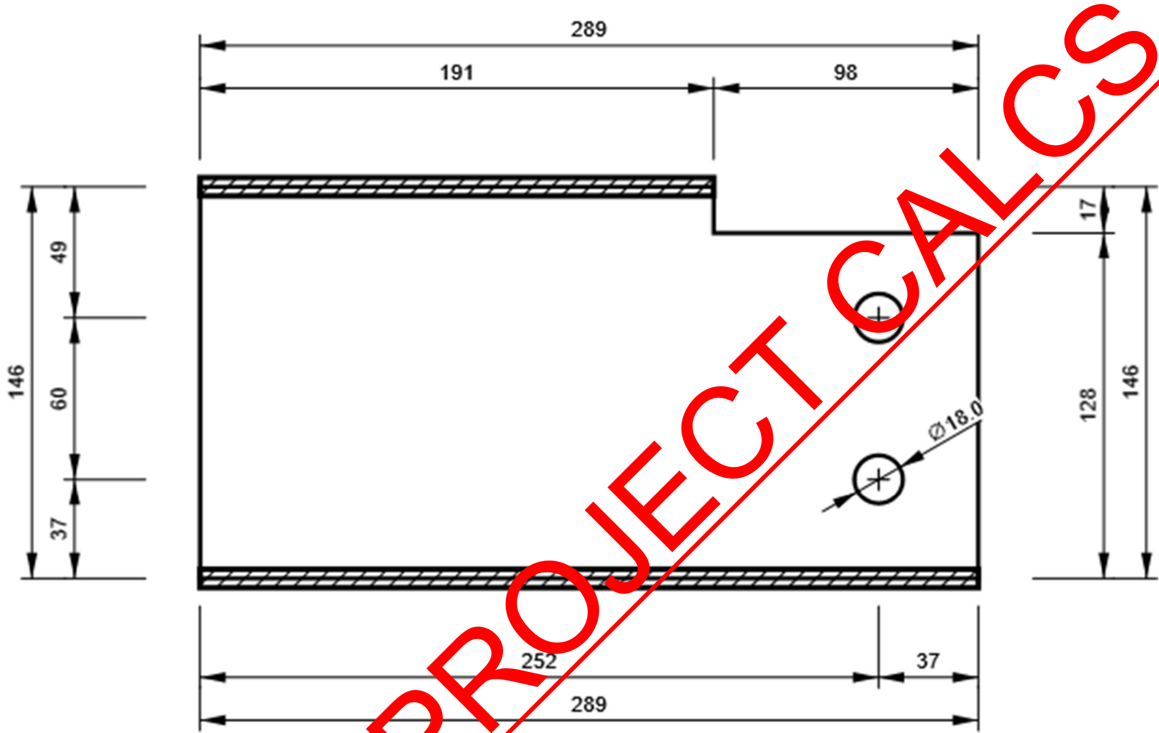

CLEAT1 a, L80X8 - Bottom flange 1:

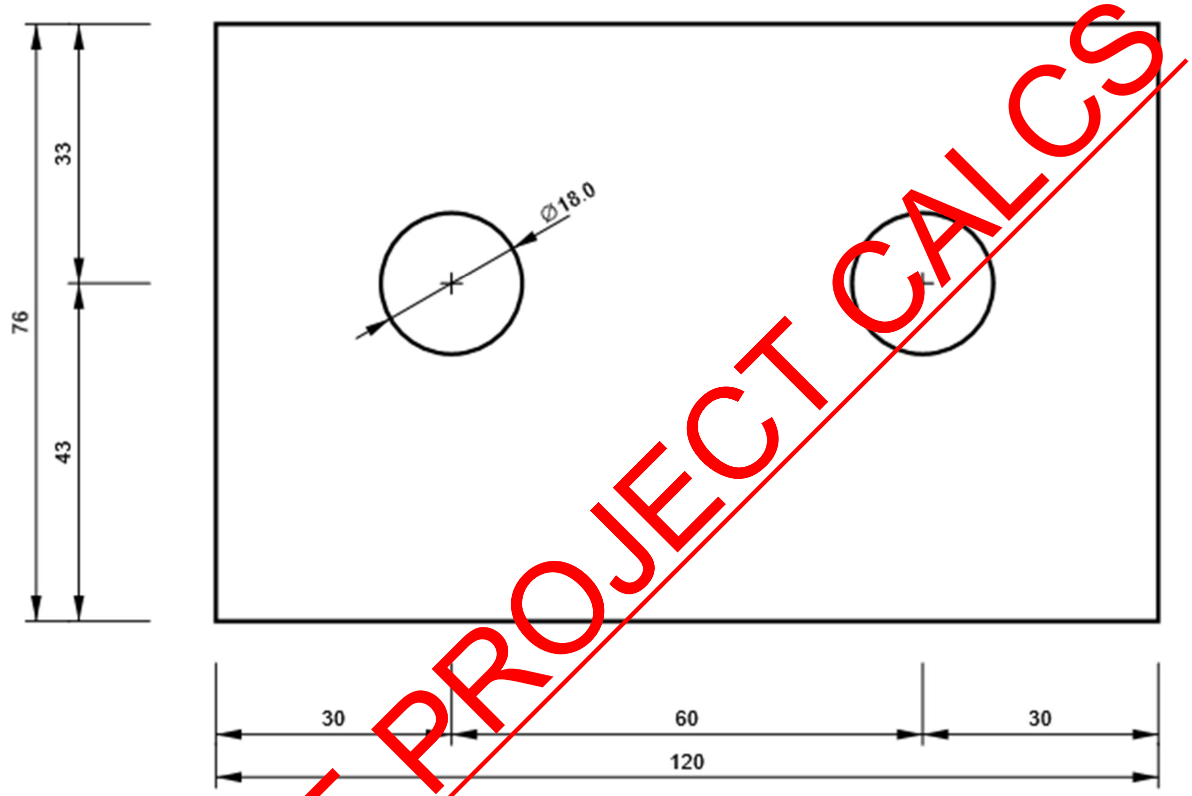

CLEAT1 a, L80X8 - Web 1:

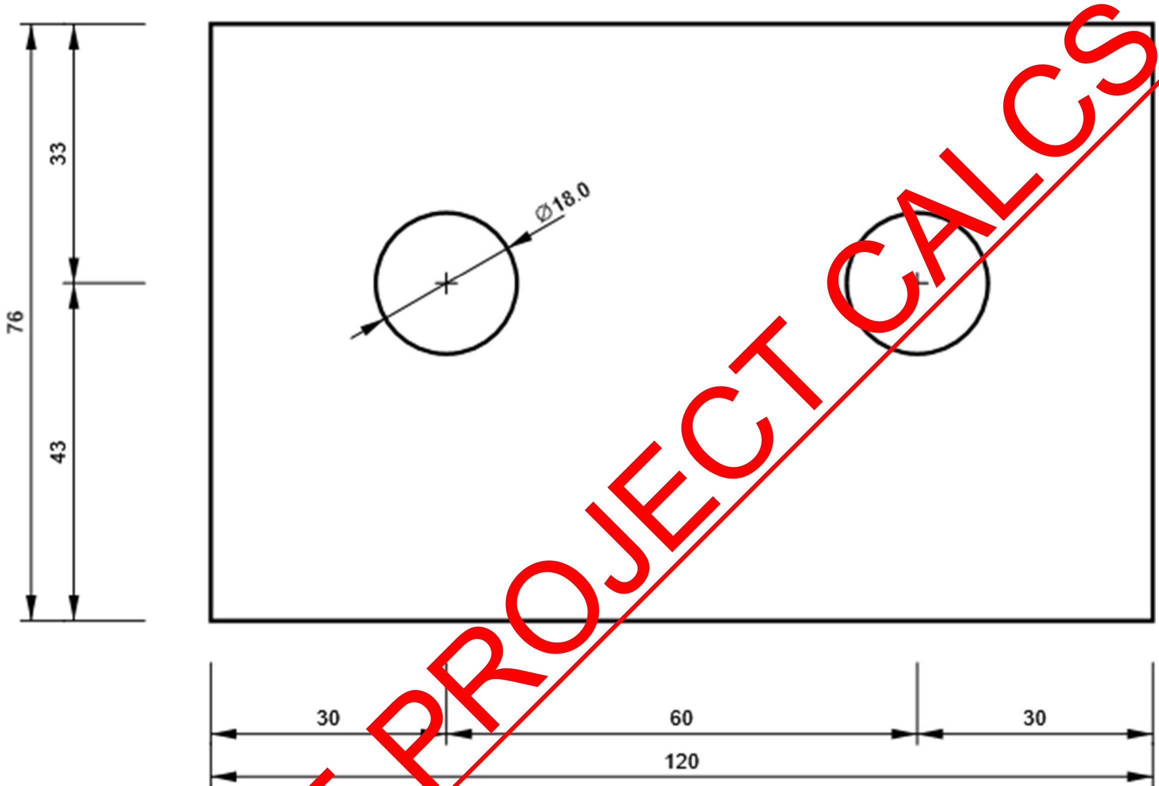

CLEAT1 b, L80X8 - Bottom flange 1:

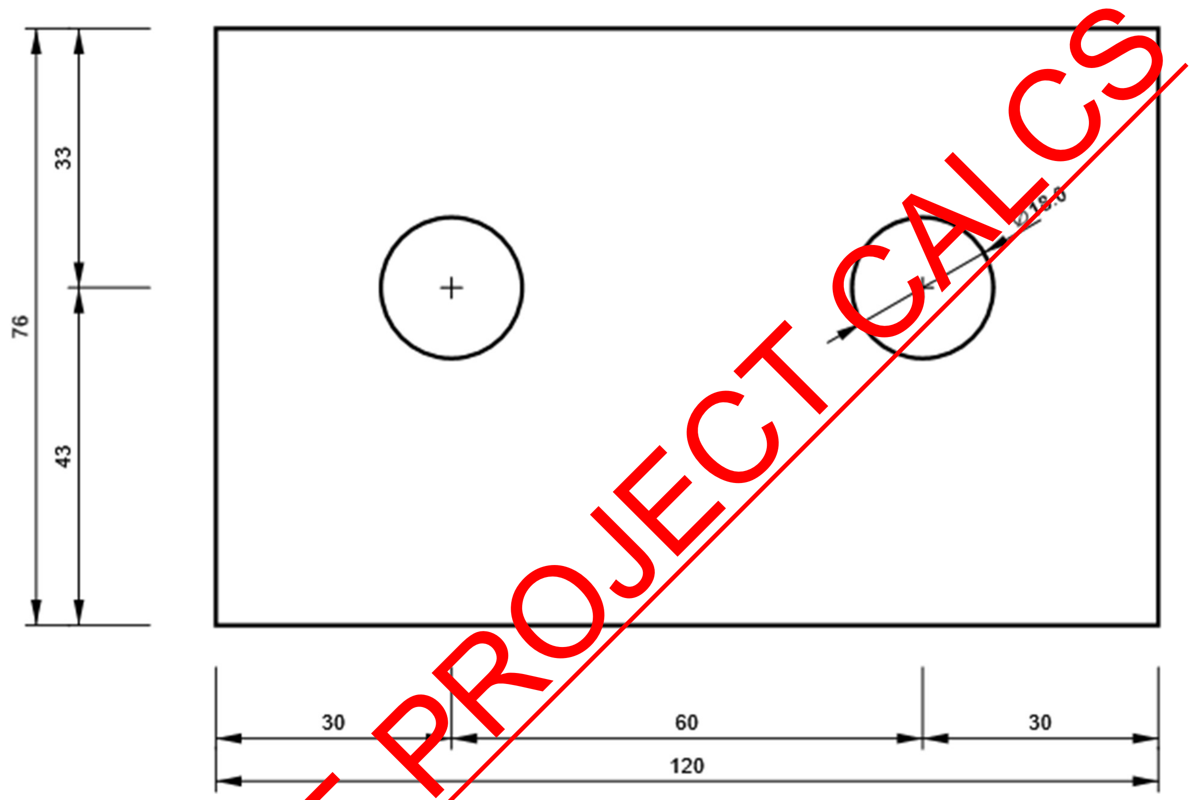

CLEAT1 b, L80X8 - Web 1:

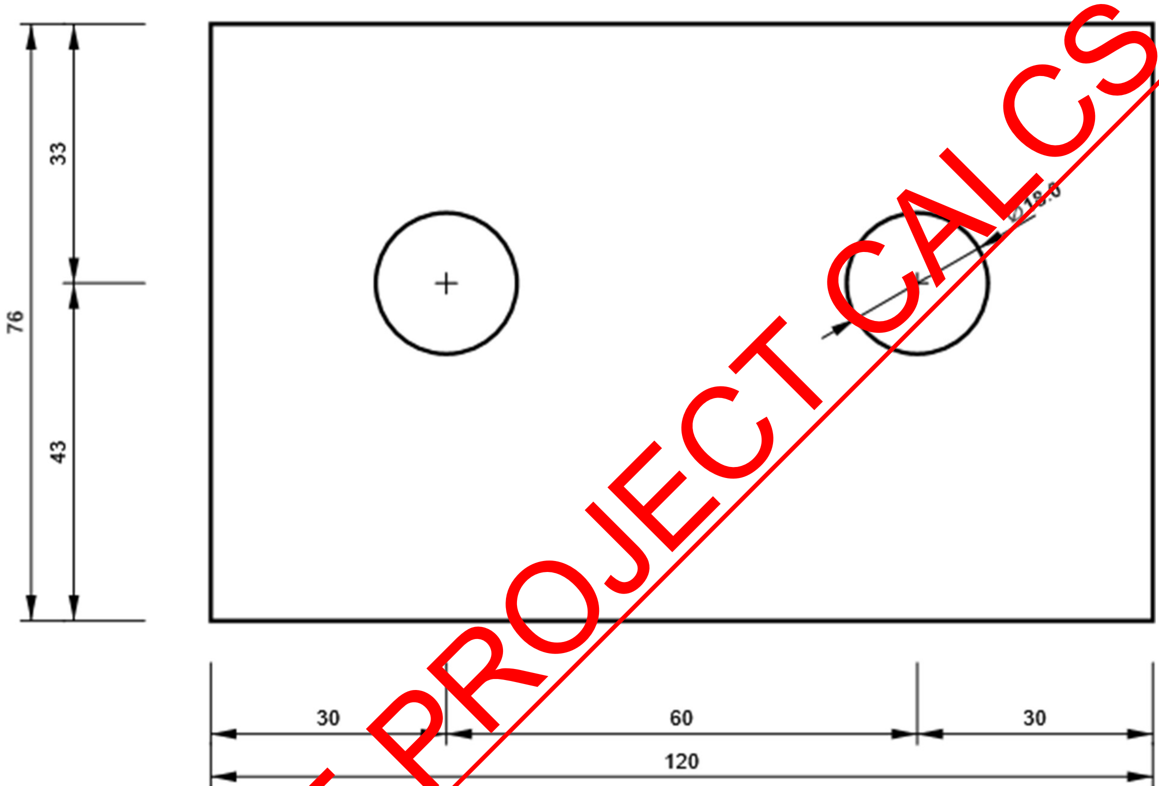

- **Connection-8**

Project data

Project name	
Project number	-
Author	
Description	CONNECTION - 8
Date	
Design code	EN

Material

Steel	S 275
Concrete	C25/30

Project item Connection - 8

Design

Name	Connection - 8
Description	
Analysis	Stress, strain/ simplified loading

Beams and columns

Name	Cross-section	β – Direction [°]	γ - Pitch [°]	α - Rotation [°]	Offset ex [mm]	Offset ey [mm]	Offset ez [mm]	Forces in	X [mm]
M1	2 - UC 203 x 203 x 60	0.0	-90.0	0.0	100	0	0	Bolts	0
M2	2 - UC 203 x 203 x 60	0.0	0.0	0.0	0	0	0	Bolts	0
M3	1 - UC 152 x 152 x 23	-90.0	0.0	0.0	100	0	28	Bolts	-47

<table>
<tr><td rowspan="2">PEPP
PEARL ENGINEERS, PLANNERS & PROJECT MANAGERS
02 TOWERFIELDS WESTERHAM ROAD
BROMLEY, BR2 6HF
Email: info@Pearlepp.co.uk
Website: www. pearlepp.co.uk
Tel no. 02035763199</td><td colspan="2">Project: 68 GROVE PARK RD UK</td><td>Sheet No./Rev.
258</td></tr>
<tr><td>Job Ref. 2024-06-</td><td>Structural Engineer
MM</td><td>Date
11/06/2024</td></tr>
</table>

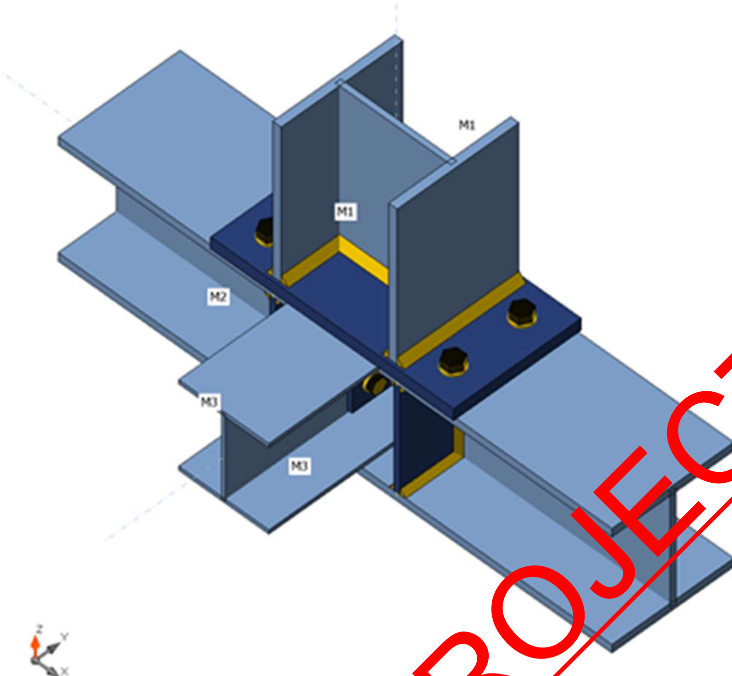

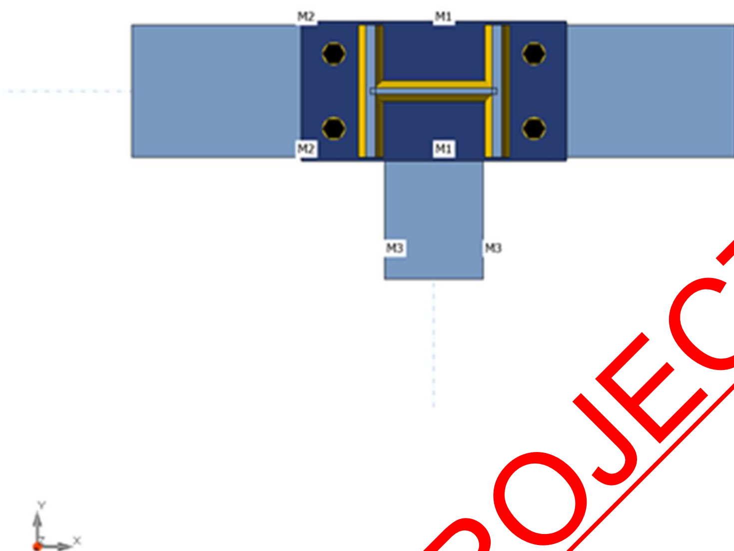

M2
M1
M2
M1
M3
M3
Y
X

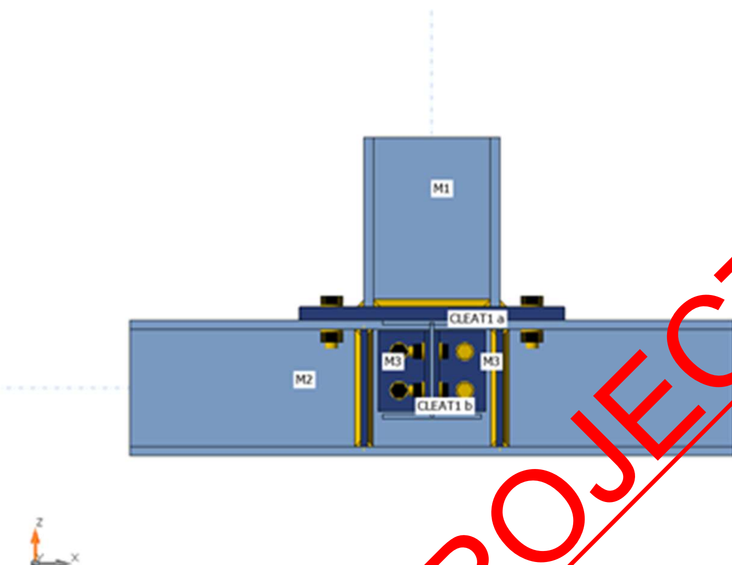
M1
CLEAT1 a
M3
M3
M2
CLEAT1 b
z
x

PEPP – Pearl Engineers, Planners & Project Managers	**Project:** 68 GROVE PARK RD UK		**Sheet No./Rev.** 261
02 TOWERFIELDS WESTERHAM ROAD BROMLEY, BR2 6HF Email: info@Pearlepp.co.uk Website: www. pearlepp.co.uk Tel no. 02035763199	**Job Ref. 2024-06-**	**Structural Engineer** **MM**	**Date** **11/06/2024**

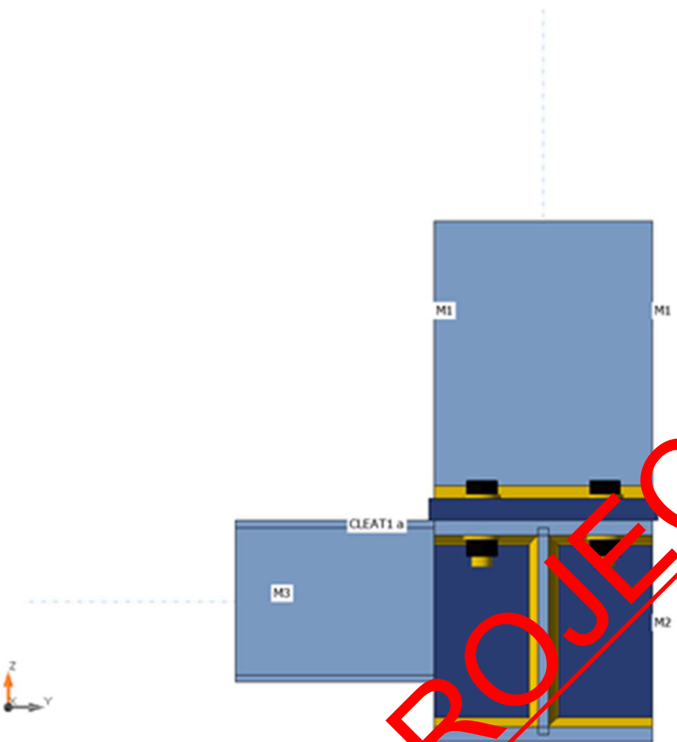

Cross-sections

Name	Material
2 - UC 203 x 203 x 60	S 275
1 - UC 152 x 152 x 23	S 275
3 - L80X8	S 275

Cross-sections

Name	Material	Drawing

2 - UC 203 x 203 x 60	S 275	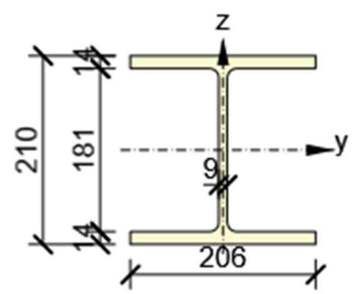
1 - UC 152 x 152 x 23	S 275	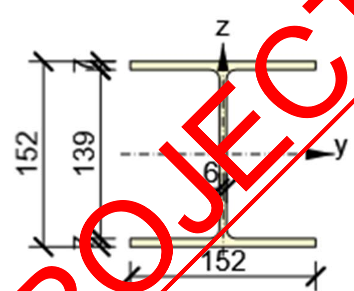
3 - L80X8	S 275	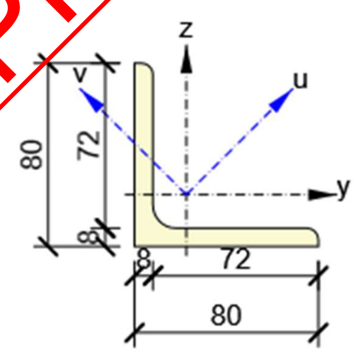

Bolts

Name	Bolt assembly	Diameter [mm]	fu [MPa]	Gross area [mm^2]
M20 8.8	M20 8.8	20	800.0	314
M16 8.8	M16 8.8	16	800.0	201

Load effects (equilibrium not required)

Name	Member	N	Vy	Vz	Mx	My	Mz

		[kN]	[kN]	[kN]	[kNm]	[kNm]	[kNm]
LE1	M1	-40.0	0.0	-10.0	0.0	-30.0	0.0
	M3	0.0	0.0	-30.0	0.0	0.0	0.0

Check

Summary

Name	Value	Status
Analysis	100.0%	OK
Plates	0.0 < 5.0%	OK
Bolts	42.4 < 100%	OK
Welds	40.9 < 100%	OK
Buckling	52.32	

Plates

Name	Material	Thickness [mm]	Loads	σ_{Ed} [MPa]	ε_{Pl} [%]	σc_{Ed} [MPa]	Status
M1-bfl 1	S 275	14.2	LE1	167.7	0.0	0.0	OK
M1-tfl 1	S 275	14.2	LE1	138.9	0.0	0.0	OK
M1-w 1	S 275	9.4	LE1	108.2	0.0	0.0	OK
M2-bfl 1	S 275	14.2	LE1	84.5	0.0	0.0	OK
M2-tfl 1	S 275	14.2	LE1	261.7	0.0	12.9	OK
M2-w 1	S 275	9.4	LE1	200.0	0.0	123.4	OK
M3-bfl 1	S 275	6.8	LE1	46.5	0.0	0.0	OK
M3-tfl 1	S 275	6.8	LE1	46.4	0.0	0.0	OK
M3-w 1	S 275	5.8	LE1	151.1	0.0	47.5	OK
CLEAT1 a-bfl 1	S 275	8.0	LE1	231.0	0.0	123.4	OK
CLEAT1 a-w 1	S 275	8.0	LE1	206.2	0.0	123.4	OK
CLEAT1 b-bfl 1	S 275	8.0	LE1	225.8	0.0	117.2	OK
CLEAT1 b-w 1	S 275	8.0	LE1	198.3	0.0	117.2	OK
STIFF1a	S 355	10.0	LE1	73.2	0.0	0.0	OK
STIFF1b	S 355	10.0	LE1	66.1	0.0	0.0	OK
STIFF1c	S 355	10.0	LE1	133.0	0.0	0.0	OK
STIFF1d	S 355	10.0	LE1	139.5	0.0	0.0	OK
EP1	S 275	20.0	LE1	193.6	0.0	12.9	OK
STIFF2	S 275	10.0	LE1	39.8	0.0	0.0	OK

Design data

Material	f_y [MPa]	ε_{lim} [%]
S 275	275.0	5.0
S 355	355.0	5.0

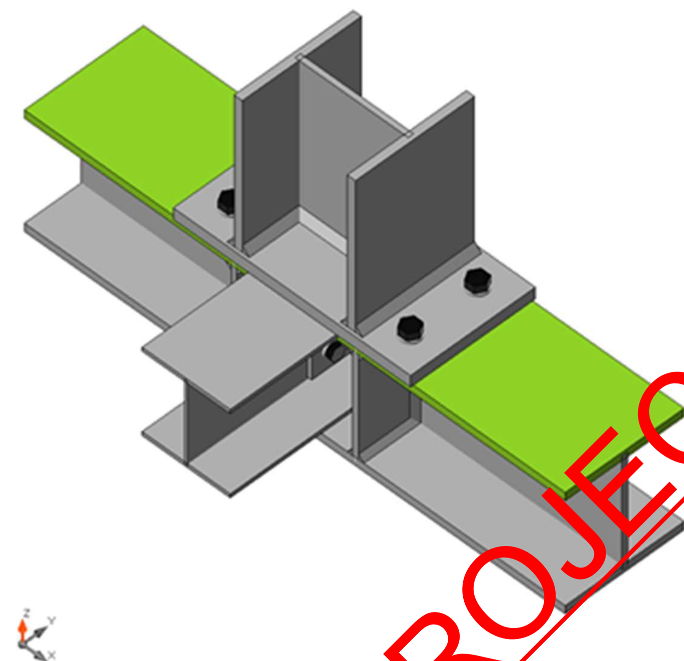

Overall check, LE1

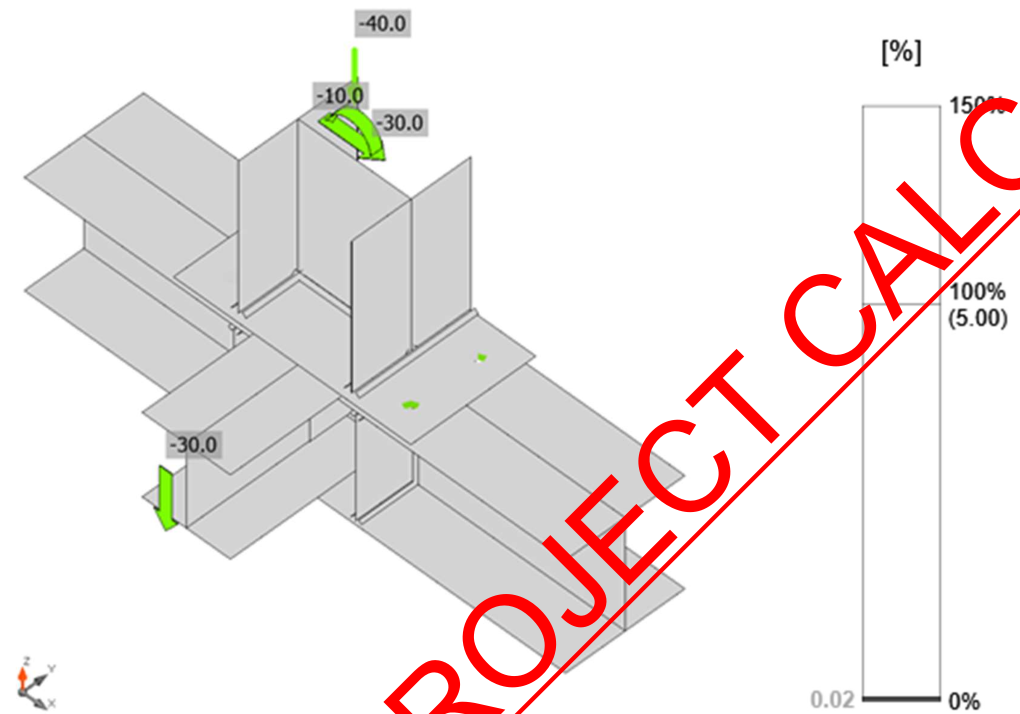

Strain check, LE1

02 TOWERFIELDS WESTERHAM ROAD BROMLEY, BR2 6HF Email: info@Pearlepp.co.uk Website: www. pearlepp.co.uk Tel no. 02035763199	**Project:** 68 GROVE PARK RD UK	**Sheet No./Rev.** 266
	Job Ref. 2024-06- | **Structural Engineer** **MM**	**Date** **11/06/2024**

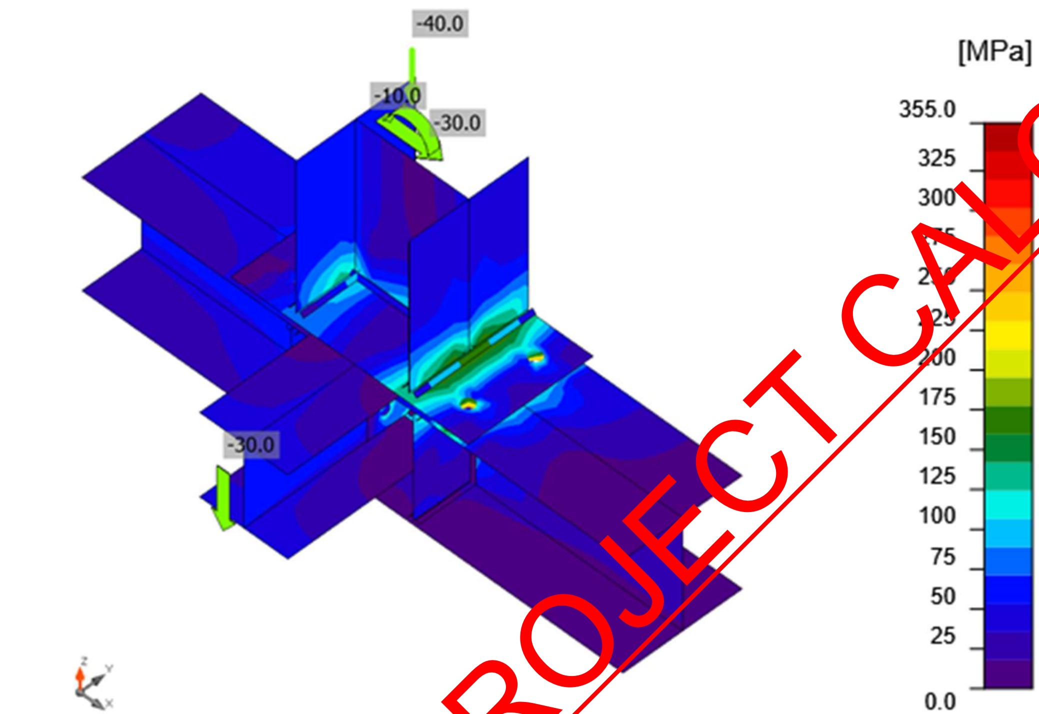

Equivalent stress, LE1

Bolts

	Name	Grade	Loads	$F_{t,Ed}$ [kN]	V [kN]	Ut_t [%]	$F_{b,Rd}$ [kN]	Ut_s [%]	Ut_{ts} [%]	Status
	B1	M20 8.8 - 1	LE1	0.4	1.2	0.3	244.2	1.3	1.5	OK
	B2	M20 8.8 - 1	LE1	0.5	1.8	0.3	244.2	1.9	2.2	OK
	B3	M20 8.8 - 1	LE1	59.5	4.8	42.1	240.7	5.1	35.2	OK
	B4	M20 8.8 - 1	LE1	59.8	3.7	42.4	225.4	4.0	34.2	OK
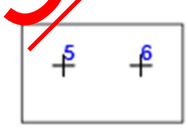	B5	M16 8.8 - 2	LE1	8.1	7.8	9.0	68.7	21.9	19.3	OK
	B6	M16 8.8 - 2	LE1	5.5	7.8	6.1	66.2	22.6	17.2	OK
	B7	M16 8.8 - 2	LE1	5.0	8.8	5.5	105.7	14.6	18.5	OK

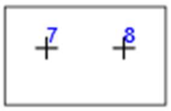	B8	M16 8.8 - 2	LE1	16.6	7.9	18.3	66.3	13.0	26.1	OK
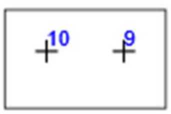	B9	M16 8.8 - 2	LE1	4.9	7.9	5.4	110.1	13.1	16.9	OK
	B10	M16 8.8 - 2	LE1	16.1	7.3	17.8	66.3	12.	24.8	OK

Design data

Name	$F_{t,Rd}$ [kN]	$B_{p,Rd}$ [kN]	$F_{v,Rd}$ [kN]
M20 8.8 - 1	141.1	290.0	94.1
M16 8.8 - 2	90.4	129.7	60.3

Detailed result for B4

Tension resistance check (EN 1993-1-8 tab 3.4)

$F_{t,Rd} = \frac{k_2 f_{ub} A_s}{\gamma_{M2}} =$ 141.1 kN ≥ $F_t =$ 59.8 kN

where:

$k_2 =$ 0.90 – Factor

$f_{ub} =$ 800.0 MPa – Ultimate tensile strength of the bolt

$A_s =$ 245 mm^2 – Tensile stress area of the bolt

$\gamma_{M2} =$ 1.25 – Safety factor

Punching resistance check (EN 1993-1-8 tab 3.4)

$B_{p,Rd} = \frac{0.6 \pi d_m t_p f_u}{\gamma_{M2}} =$ 290.0 kN ≥ $F_t =$ 59.8 kN

where:

$d_m =$ 32 mm – The mean of the across points and across flats dimensions of the bolt head or the nut, whichever is smaller

$t_p =$ 14 mm – Thickness

$f_u =$ 430.0 MPa – Ultimate strength

$\gamma_{M2} =$ 1.25 – Safety factor

Shear resistance check (EN 1993-1-8 tab 3.4)

$F_{v,Rd} = \frac{\beta_p \alpha_v f_{ub} A}{\gamma_{M2}} =$ 94.1 kN ≥ $V =$ 3.7 kN

where:

$\beta_p = 1.00$ – Reducing factor

$\alpha_v = 0.60$ – Reducing factor

$f_{ub} = 800.0$ MPa – Ultimate tensile strength of the bolt

$A = 245$ mm^2 – Tensile stress area of the bolt

$\gamma_{M2} = 1.25$ – Safety factor

Bearing resistance check (EN 1993-1-8 tab 3.4)

$F_{b,Rd} = \frac{k_1 \alpha_b f_u d t}{\gamma_{M2}} =$ 225.4 kN ≥ $V =$ 3.7 kN

where:

$k_1 = \min(2.8\frac{e_2}{d_0} - 1.7, 1.4\frac{p_2}{d_0} - 1.7, 2.5) = 2.50$ – Factor for edge distance and bolt spacing perpendicular to the direction of load transfer

$\alpha_b = \min(\frac{e_1}{3d_0}, \frac{p_1}{3d_0} - \frac{1}{4}, \frac{f_{ub}}{f_u}, 1) = 0.92$ – Factor for end distance and bolt spacing in direction of load transfer

$e_2 = 45$ mm – Distance to the plate edge perpendicular to the shear force

$p_2 = \infty$ mm – Distance between bolts perpendicular to the shear force

$d_0 = 22$ mm – Bolt hole diameter

$e_1 = 61$ mm – Distance to the plate edge in the direction of the shear force

$p_1 = \infty$ mm – Distance between bolts in the direction of the shear force

$f_{ub} = 800.0$ MPa – Ultimate tensile strength of the bolt

$f_u = 430.0$ MPa – Ultimate strength

$d = 20$ mm – Nominal diameter of the fastener

$t = 14$ mm – Thickness of the plate

$\gamma_{M2} = 1.25$ – Safety factor

Interaction of tension and shear (EN 1993-1-8 tab 3.4)

$U_{ts} = \frac{F_{v,Ed}}{F_{v,Rd}} + \frac{F_{t,Ed}}{1.4F_{t,Rd}} =$ 34.2 %

Utilization in tension

$U_{tt} = \frac{F_{t,Ed}}{\min(F_{t,Rd};B_{p,Rd})} =$ 42.4 %

Utilization in shear

$U_{ts} = \frac{V_{Ed}}{\min(F_{v,Rd};F_{b,Rd})} =$ 4.0 %

02 TOWERFIELDS WESTERHAM ROAD
BROMLEY, BR2 6HF
Email: info@Pearlepp.co.uk
Website: www. pearlepp.co.uk
Tel no. 02035763199

Welds (Plastic redistribution)

Item	Edge	Throat th. [mm]	Length [mm]	Loads	$\sigma_{w,Ed}$ [MPa]	ε_{Pl} [%]	$\sigma_{\perp}$ [MPa]	$\tau_{\|\|}$ [MPa]	$\tau_{\perp}$ [MPa]	Ut [%]	Ut_c [%]	Status
M2-bfl 1	STIFF1 a	◢6.5 ◣	98	LE1	18.9	0.0	-9.9	-6.8	-6.3	4.7	3.4	OK
		◢6.5 ◣	98	LE1	21.8	0.0	-3.6	10.1	7.2	5.4	3.2	OK
M2-w 1	STIFF1 a	◢6.5 ◣	181	LE1	33.0	0.0	-6.1	15.6	-10.4	8.1	6.2	OK
		◢6.5 ◣	181	LE1	26.8	0.0	-9.8	-13.8	5.6	6.6	5.0	OK
M2-tfl 1	STIFF1 a	◢6.5 ◣	98	LE1	46.4	0.0	-19.9	-3.3	-24.0	11.5	8.5	OK
		◢6.5 ◣	98	LE1	61.2	0.0	-32.1	9.8	28.3	15.1	13.0	OK
M2-bfl 1	STIFF1 b	◢6.5 ◣	98	LE1	19.8	0.0	-3.1	-8.1	-7.9	4.9	2.7	OK
		◢6.5 ◣	98	LE1	18.1	0.0	-10.0	7.1	5.1	4.5	2.9	OK
M2-w 1	STIFF1 b	◢6.5 ◣	181	LE1	28.2	0.0	-0.1	16.3	-0.7	7.0	5.7	OK
		◢6.5 ◣	181	LE1	31.1	0.0	-5.2	-14.7	9.9	7.7	5.3	OK
M2-tfl 1	STIFF1 b	◢6.5 ◣	98	LE1	60.7	0.0	-28.7	-11.1	-28.8	15.0	12.0	OK
		◢6.5 ◣	98	LE1	49.8	0.0	-23.6	9.3	23.6	12.3	8.9	OK
M2-bfl 1	STIFF1 c	◢6.5 ◣	98	LE1	17.6	0.0	-9.3	6.7	5.5	4.3	2.6	OK
		◢6.5 ◣	98	LE1	21.1	0.0	8.0	-8.2	-7.8	5.2	3.9	OK
M2-w 1	STIFF1 c	◢6.5 ◣	181	LE1	26.5	0.0	-10.9	1.1	13.9	6.6	5.6	OK
		◢6.5 ◣	181	LE1	41.5	0.0	26.8	13.0	-12.9	10.3	5.9	OK
M2-tfl 1	STIFF1 c	◢6.5 ◣	98	LE1	106.9	0.0	44.5	46.5	31.4	26.4	18.4	OK
		◢6.5 ◣	98	LE1	45.4	0.0	-0.2	12.1	-23.3	11.2	7.3	OK
M2-bfl 1	STIFF1 d	◢6.5 ◣	98	LE1	20.9	0.0	8.0	7.8	8.0	5.2	3.8	OK
		◢6.5 ◣	98	LE1	18.3	0.0	-8.9	-7.8	-4.8	4.5	3.1	OK
M2-w 1	STIFF1 d	◢6.5 ◣	181	LE1	38.3	0.0	20.5	-14.2	12.1	9.5	6.6	OK
		◢6.5 ◣	181	LE1	30.2	0.0	-9.2	1.9	-16.5	7.5	4.9	OK

SAMPLE PROJECT CALCS

M2-tfl 1	STIFF1 d	◢6.5◣	98	LE1	46.0	0.0	-1.8	-15.2	21.7	11.4	7.2	OK
		◢6.5◣	98	LE1	113.1	0.0	43.8	-50.3	-33.0	27.9	19.6	OK
EP1	M1-bfl 1	◢8.5◣	206	LE1	79.3	0.0	5.7	-22.9	39.5	19.6	11.6	OK
		◢8.5◣	206	LE1	165.6	0.0	105.0	-19.8	-71.2	40.9	25.8	OK
EP1	M1-tfl 1	◢8.5◣	206	LE1	146.2	0.0	-92.7	0.6	-65.3	[illegible]	22.9	OK
		◢8.5◣	206	LE1	96.4	0.0	-24.4	14.7	[illegible]	[illegible]	13.7	OK
EP1	M1-w 1	◢8.5◣	195	LE1	104.0	0.0	-51.5	[illegible]	-51.7	25.7	15.5	OK
		◢8.5◣	195	LE1	104.0	0.0	[illegible]	7.8	51.5	25.7	15.6	OK
M2-bfl 1	STIFF2	◢6.5◣	98	LE1	22.5	0.0	-7.4	[illegible]	-8.3	5.6	4.6	OK
		◢6.5◣	98	LE1	13.9	[illegible]	[illegible]	2.9	4.9	3.4	3.2	OK
M2-w 1	STIFF2	◢6.5◣	181	LE1	33.4	0.0	-17.7	8.8	-17.6	9.5	5.1	OK
		◢6.5◣	181	LE1	40.0	0.0	-18.8	-7.5	19.0	9.9	5.2	OK
M2-tfl 1	STIFF2	◢6.5◣	98	LE1	13.9	0.0	13.8	-1.0	0.0	4.4	1.8	OK
		◢6.5◣	98	LE1	17.1	0.0	-7.2	-2.8	8.5	4.2	3.4	OK

Design data

	β_w [-]	$\sigma_{w,Rd}$ [MPa]	0.9 σ [MPa]
S 275	0.85	404.7	309.6

Detailed result for EP1 M1-bfl 1

Weld resistance check (EN 1993-1-8 4.5.3.2)

$\sigma_{w,Rd} = f_u/(\beta_w \gamma_{M2}) =$ 404.7 MPa ≥ $\sigma_{w,Ed} = [\sigma_\perp^2 + 3(\tau_\perp^2 + \tau_\parallel^2)]^{0.5} =$ 165.6 MPa

$\sigma_{\perp,Rd} = 0.9 f_u/\gamma_{M2} =$ 309.6 MPa ≥ $|\sigma_\perp| =$ 105.0 MPa

where:

$f_u =$ 430.0 MPa – Ultimate strength

$\beta_w =$ 0.85 – appropriate correlation factor taken from Table 4.1

$\gamma_{M2} =$ 1.25 – Safety factor

Stress utilization

$U_t = \max(\frac{\sigma_{w,Ed}}{\sigma_{w,Rd}}; \frac{|\sigma_{\perp}|}{\sigma_{\perp,Rd}}) =$ 40.9 %

Buckling

Loads	Shape	Factor [-]
LE1	1	52.32
	2	60.14
	3	64.90
	4	84.28
	5	86.56
	6	88.95

Bill of material

Manufacturing operations

Name	Plates [mm]	Shape	Nr.	Welds [mm]	Length [mm]	Bolts	Nr.
STIFF1	P10.0x98.2-181.2 (S 355)		4	Double fillet: a = 6.5	1510.4		
EP1	P20.0x215.8-409.6 (S 275)		1	Double fillet: a = 8.5	607.0	M20 8.8	4
STIFF2	P10.0x98.2-181.2 (S 275)		1	Double fillet: a = 6.5	377.6		

Welds

Type	Material	Throat thickness [mm]	Leg size [mm]	Length [mm]

Double fillet	S 275	6.5	9.2	1888.0
Double fillet	S 275	8.5	12.0	607.0

Bolts

Name	Grip length [mm]	Count
M20 8.8	34	4
M16 8.8	22	2
M16 8.8	17	4

Drawing

STIFF1

P10.0x181-98 (S 355)

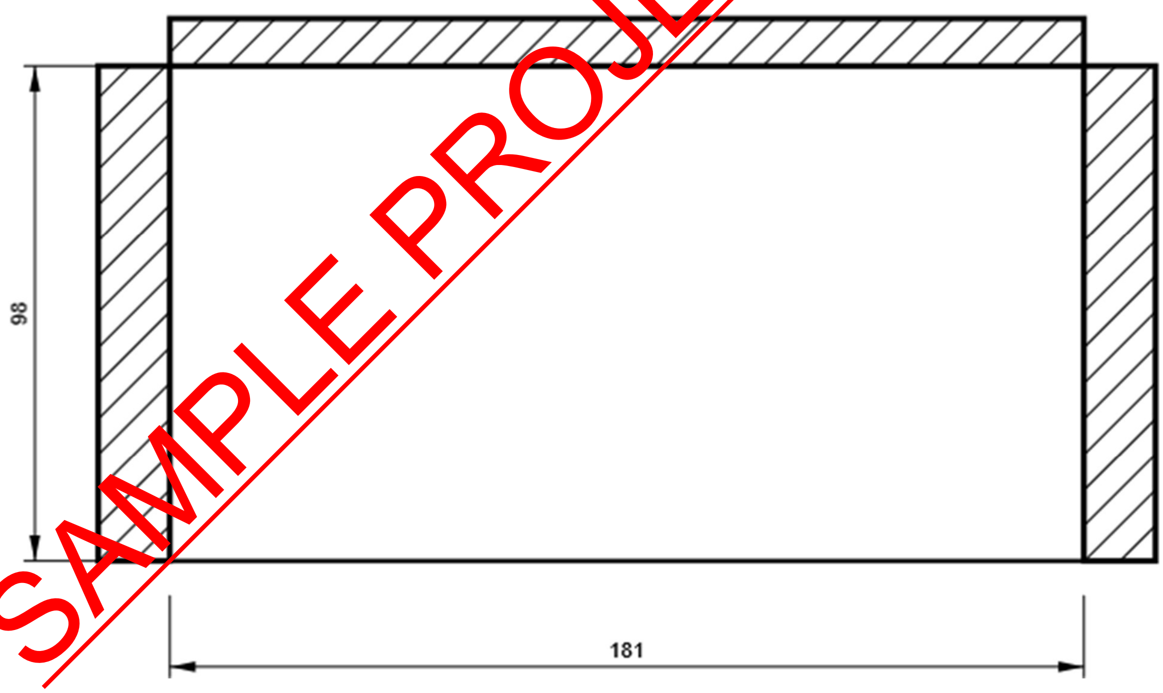

EP1

P20.0x410-216 (S 275)

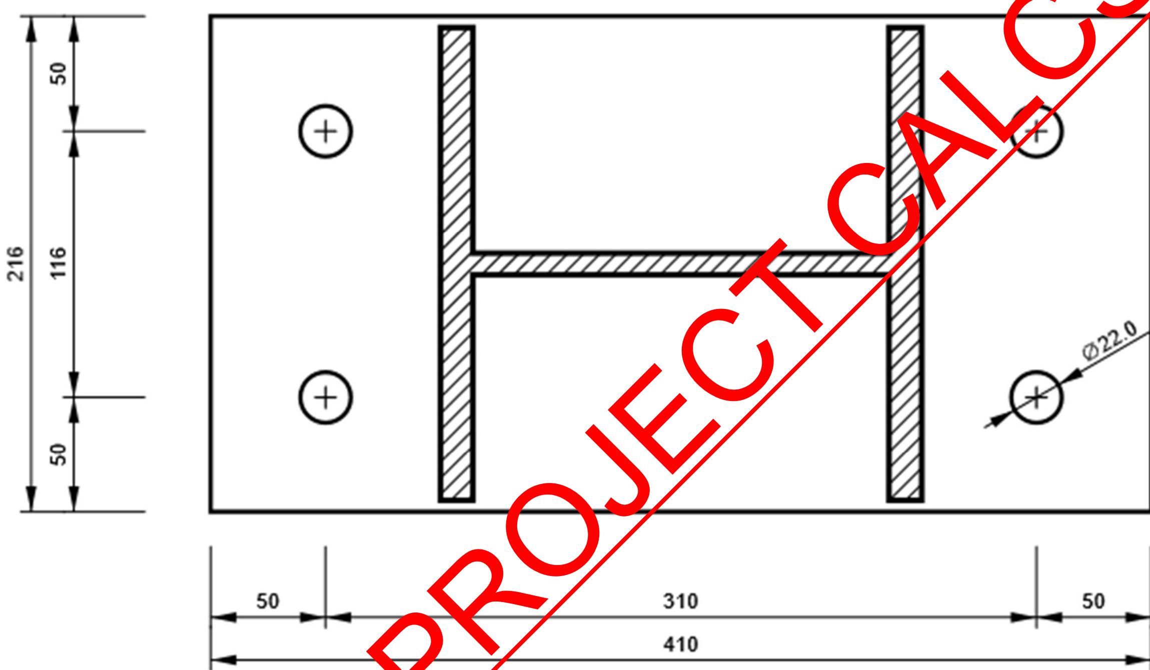

STIFF2

P10.0x181-98 (S 275)

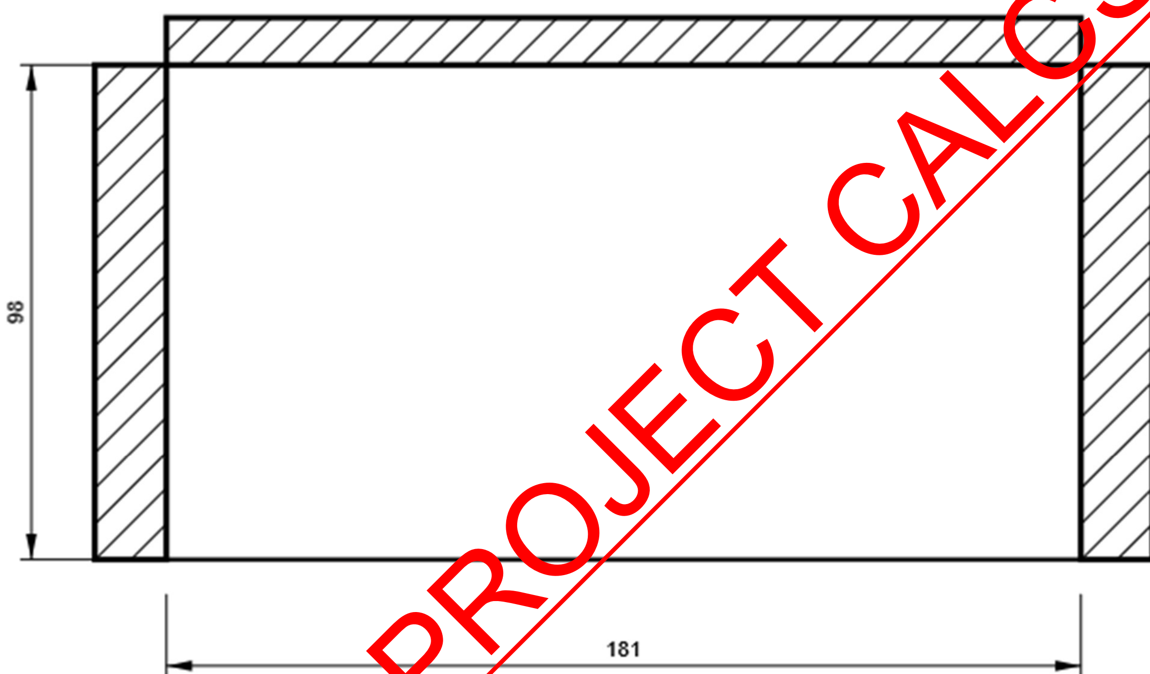

M2, UC 203 x 203 x 60 - Top flange 1:

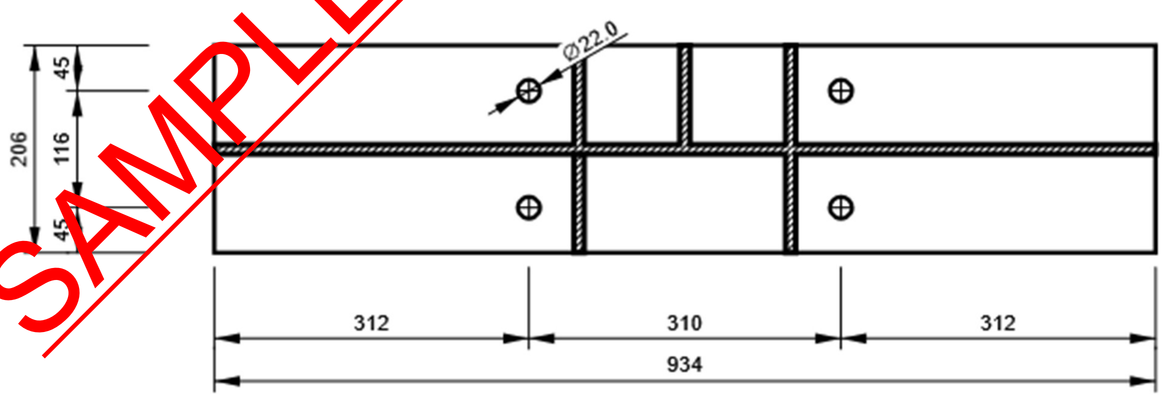

M2, UC 203 x 203 x 60 - Web 1:

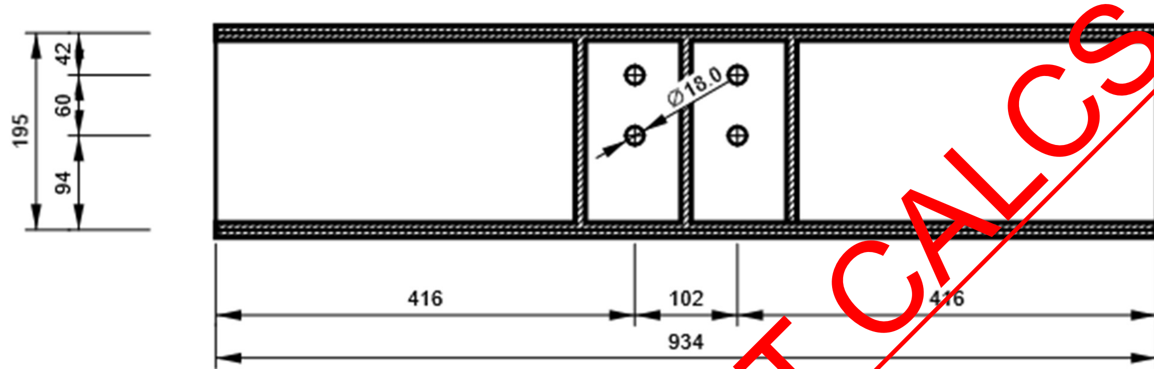

M3, UC 152 x 152 x 23 - Web 1:

PEPP
PEARL ENGINEERS, PLANNERS & PROJECT MANAGERS
02 TOWERFIELDS WESTERHAM ROAD
BROMLEY, BR2 6HF
Email: info@Pearlepp.co.uk
Website: www. pearlepp.co.uk
Tel no. 02035763199

Project: 68 GROVE PARK RD UK			**Sheet No./Rev.** 276
Job Ref. 2024-06-	**Structural Engineer** **MM**		**Date** **11/06/2024**

CLEAT1 a, L80X8 - Bottom flange 1:

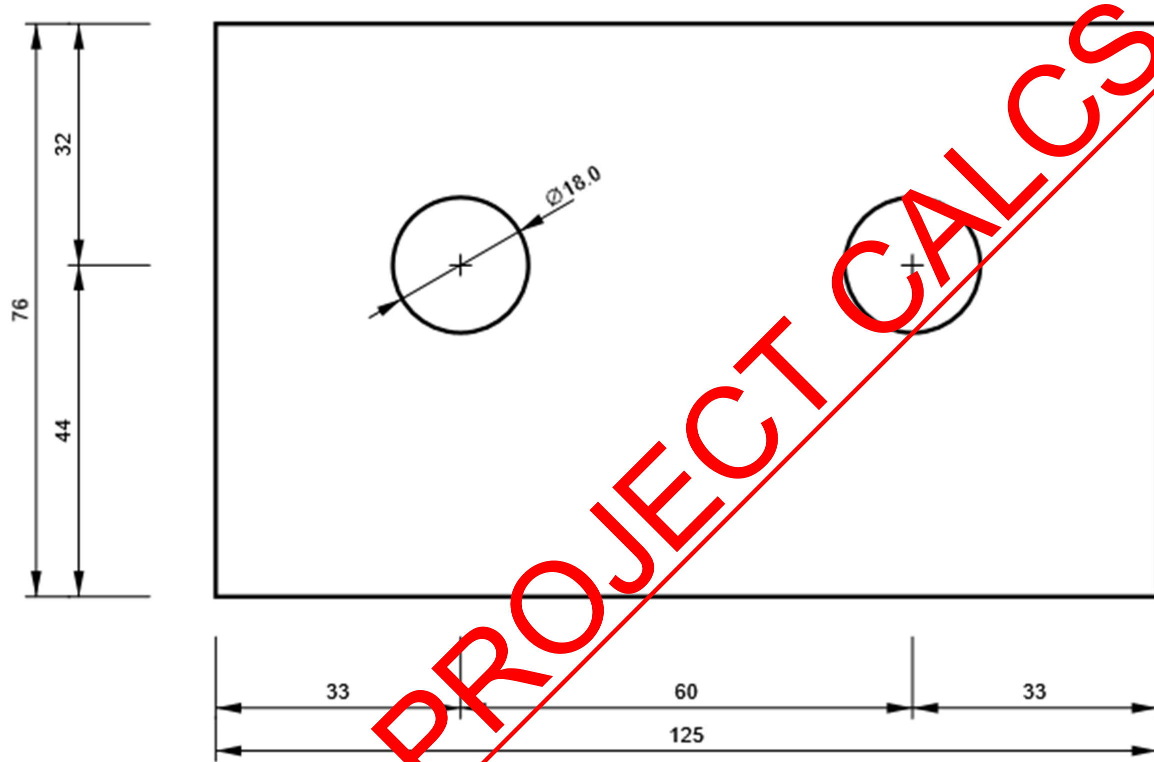

CLEAT1 a, L80X8 - Web 1:

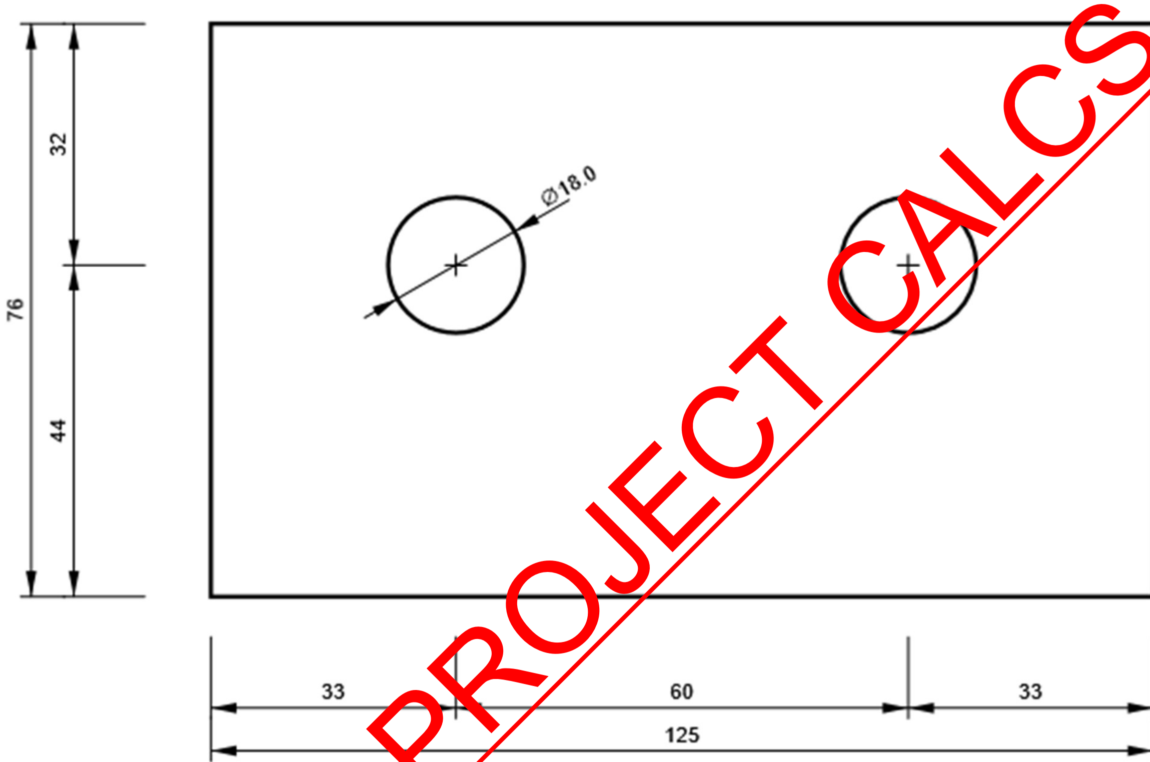

CLEAT1 b, L80X8 - Bottom flange 1:

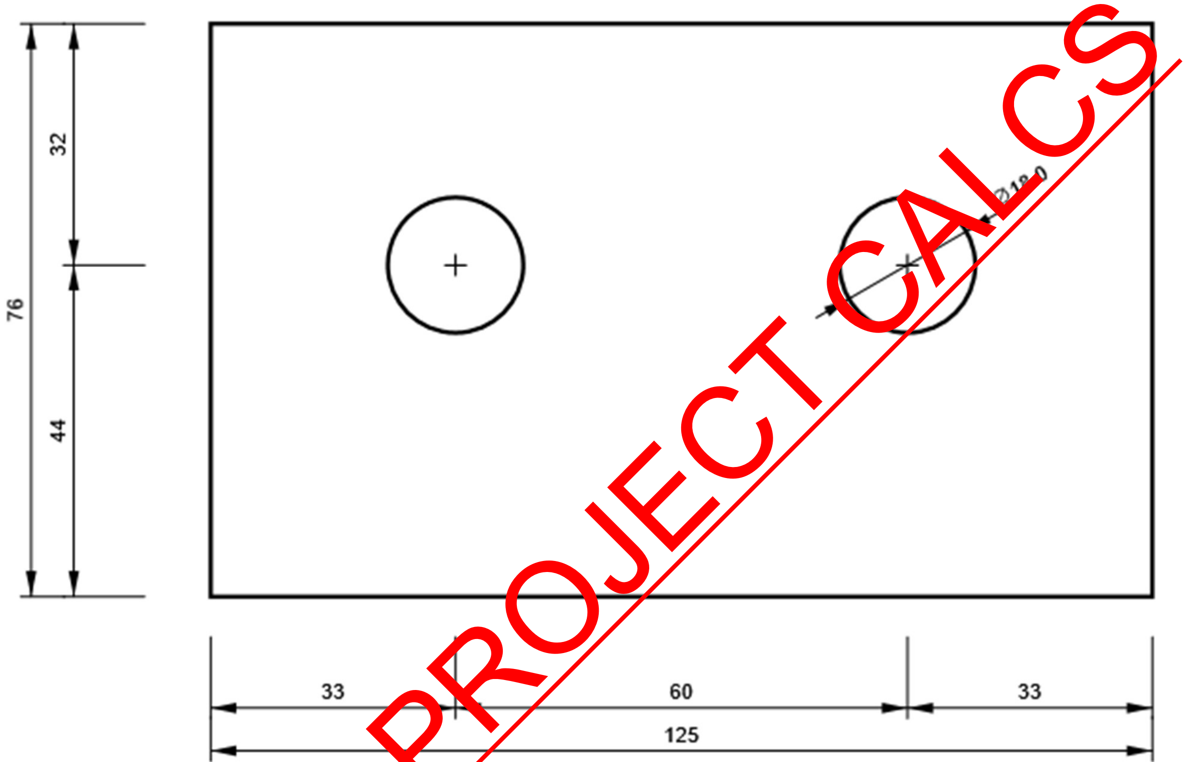

CLEAT1 b, L80X8 - Web 1:

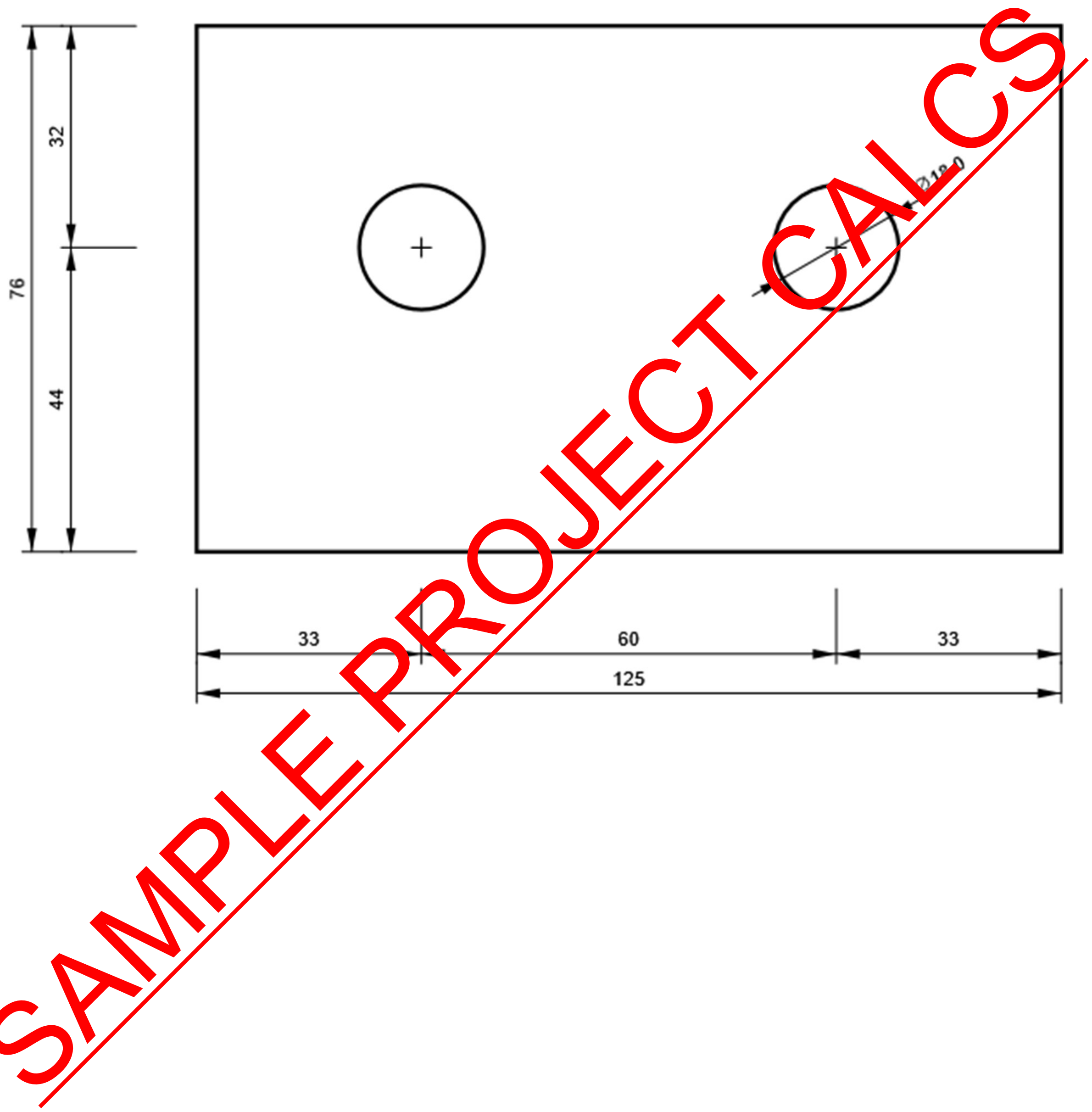

- **Connection-9**

Project data

Project name
Project number
Author
Description
Date
Design code EN

Material

Steel S 275

Project item CON9

Design

Name CON9
Description
Analysis Stress, strain/ simplified loading

Beams and columns

Name	Cross-section	β – Direction [°]	γ - Pitch [°]	α - Rotation [°]	Offset ex [mm]	Offset ey [mm]	Offset ez [mm]	Forces in
C	3 - SHS100/100/10.0	0.0	90.0	0.0	0	0	0	Bolts
B	2 - UC 203 x 203 x 60	0.0	0.0	0.0	0	0	0	Bolts

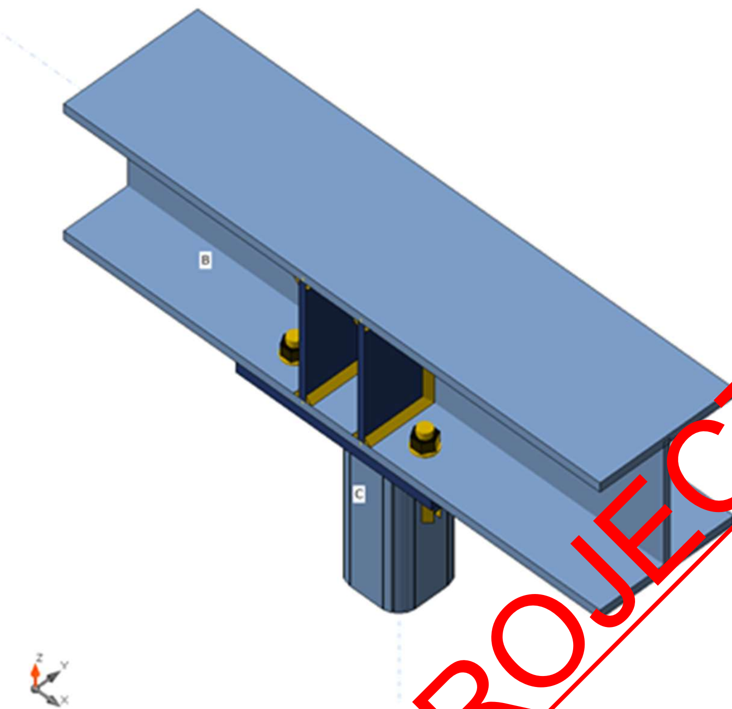

B
C

PEPP PEARL ENGINEERS, PLANNERS & PROJECT MANAGERS 02 TOWERFIELDS WESTERHAM ROAD BROMLEY, BR2 6HF Email: info@Pearlepp.co.uk Website: www. pearlepp.co.uk Tel no. 02035763199	**Project:** 68 GROVE PARK RD UK		**Sheet No./Rev.** 282
	Job Ref. 2024-06-	**Structural Engineer** **MM**	**Date** **11/06/2024**

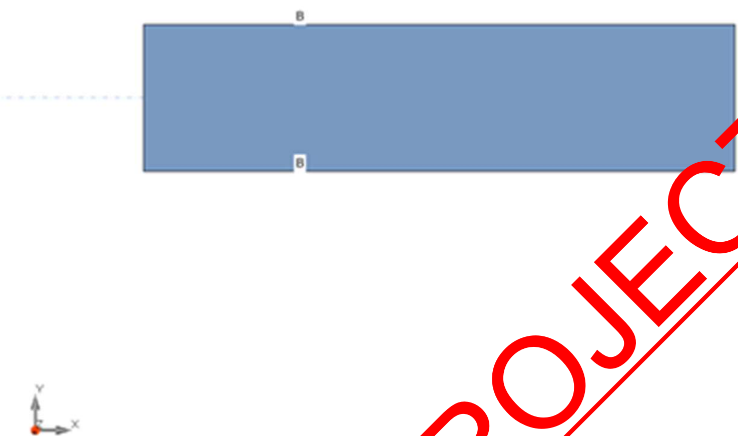

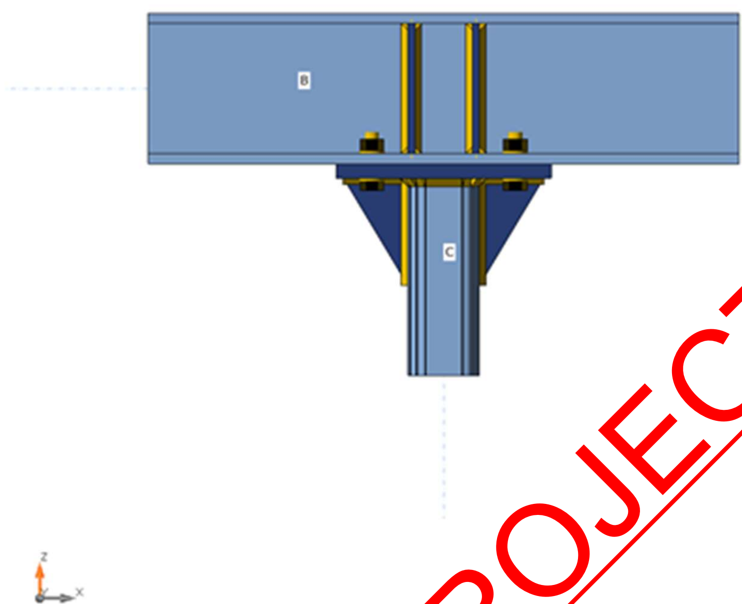

B
C
z
x

PEPP PEARL ENGINEERS, PLANNERS & PROJECT MANAGERS	**Project:** 68 GROVE PARK RD UK	**Sheet No./Rev.** 284
02 TOWERFIELDS WESTERHAM ROAD BROMLEY, BR2 6HF Email: info@Pearlepp.co.uk Website: www. pearlepp.co.uk Tel no. 02035763199	**Job Ref. 2024-06-** / **Structural Engineer** **MM**	**Date** **11/06/2024**

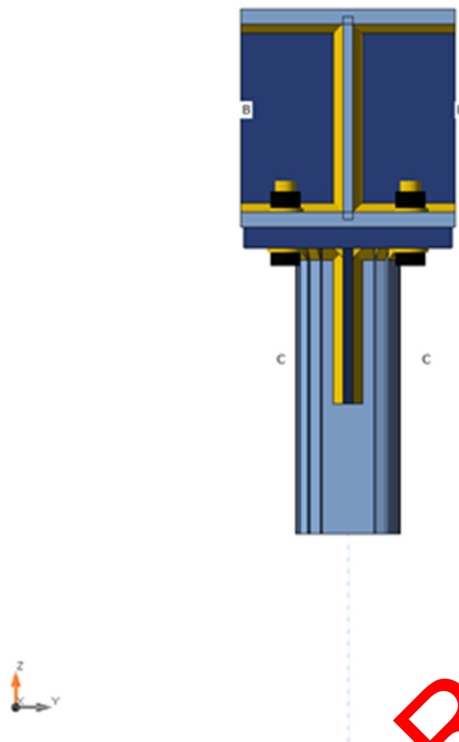

Cross-sections

Name	Material
3 - SHS100/100/10.0	S 275
2 - UC 203 x 203 x 60	S 275

Cross-sections

Name	Material	Drawing
3 - SHS100/100/10.0	S 275	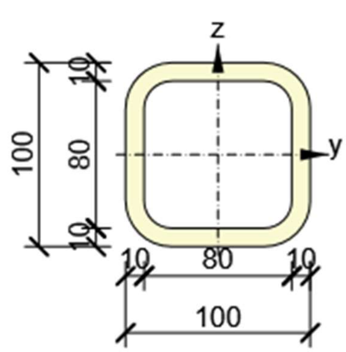

02 TOWERFIELDS WESTERHAM ROAD
BROMLEY, BR2 6HF
Email: info@Pearlepp.co.uk
Website: www. pearlepp.co.uk
Tel no. 02035763199

2 - UC 203 x 203 x 60	S 275	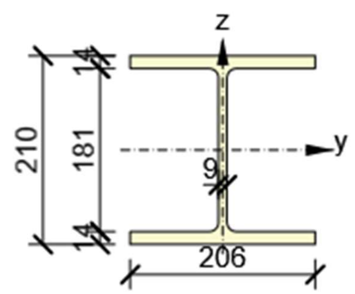

Bolts

Name	Bolt assembly	Diameter [mm]	fu [MPa]	Gross area [mm²]
M20 8.8	M20 8.8	20	800.0	314

Load effects (equilibrium not required)

Name	Member	N [kN]	Vy [kN]	Vz [kN]	Mx [kNm]	My [kNm]	Mz [kNm]
LE1	B	0.0	0.0	20.0	0.0	15.0	0.0
	B	0.0	0.0	-15.0	0.0	12.0	0.0

Check

Summary

Name	Value	Status
Analysis	100.0%	OK
Plates	0.9 < 5.0%	OK
Bolts	49.0 < 100%	OK
Welds	68.2 < 100%	OK
Buckling	32.41	
GMNA	Calculated	

Plates

Name	Thickness [mm]	Loads	σ_{Ed} [MPa]	ε_{Pl} [%]	σc_{Ed} [MPa]	Status
C	10.0	LE1	276.9	0.9	0.0	OK
B-bfl 1	14.2	LE1	275.1	0.0	21.9	OK
B-tfl 1	14.2	LE1	39.3	0.0	0.0	OK

B-w 1	9.4	LE1	142.3	0.0	0.0	OK
EP1	20.0	LE1	224.7	0.0	21.9	OK
RIB1	10.0	LE1	276.0	0.5	0.0	OK
RIB2	10.0	LE1	275.4	0.2	0.0	OK
STIFF1a	10.0	LE1	145.6	0.0	0.0	OK
STIFF1b	10.0	LE1	145.6	0.0	0.0	OK
STIFF1c	10.0	LE1	65.8	0.0	0.0	OK
STIFF1d	10.0	LE1	65.7	0.0	0.0	OK

Design data

Material	f_y [MPa]	ε_{lim} [%]
S 275	275.0	5.0

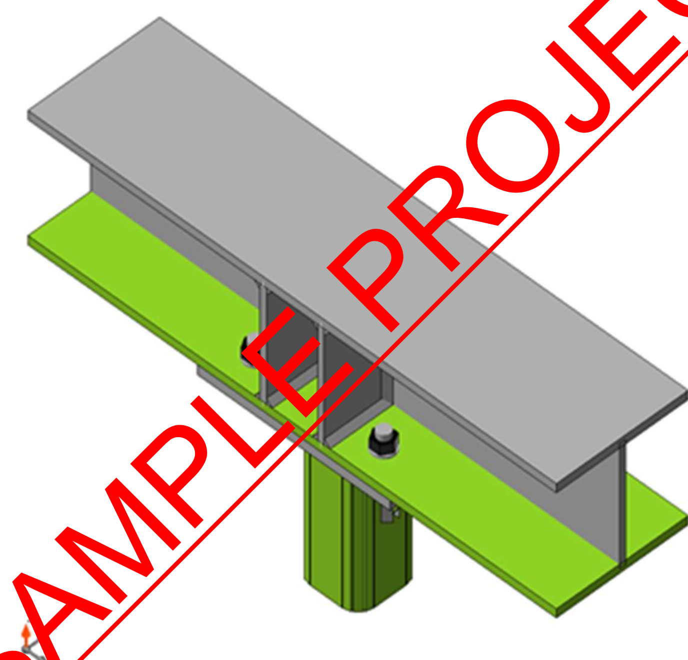

Overall check, LE1

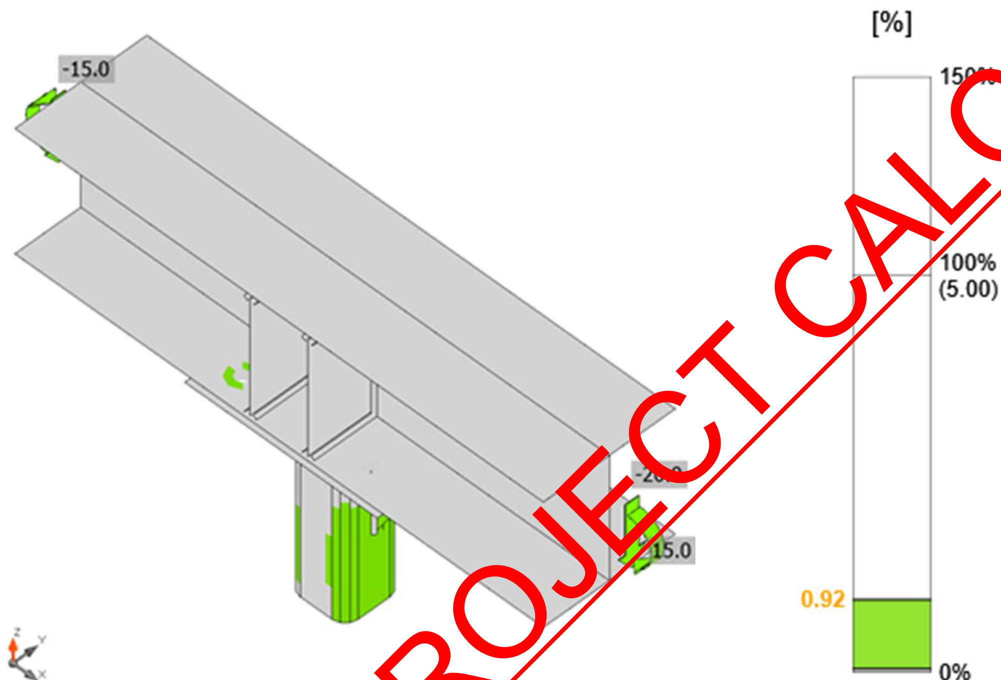

Strain check, LE1

PEPP PEARL ENGINEERS, PLANNERS & PROJECT MANAGERS 02 TOWERFIELDS WESTERHAM ROAD BROMLEY, BR2 6HF Email: info@Pearlepp.co.uk Website: www. pearlepp.co.uk Tel no. 02035763199	**Project:** 68 GROVE PARK RD UK		**Sheet No./Rev.** 288
	Job Ref. 2024-06-	**Structural Engineer** **MM**	**Date** **11/06/2024**

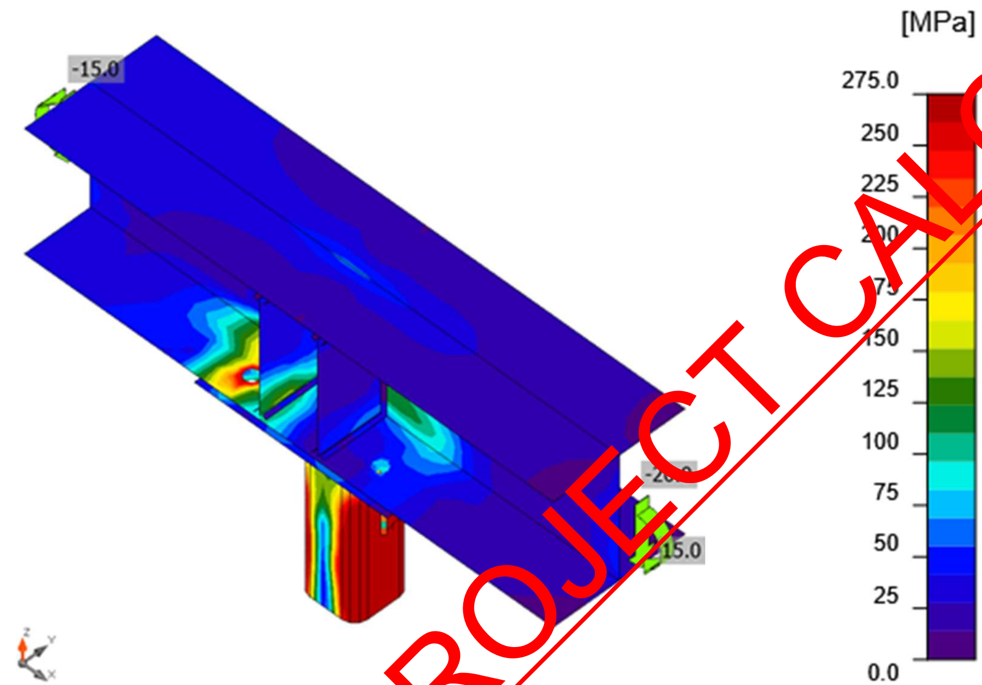

Equivalent stress, LE1

Bolts

	Name	Loads	$F_{t,Ed}$ [kN]	V [kN]	Ut_t [%]	$F_{b,Rd}$ [kN]	Ut_s [%]	Ut_{ts} [%]	Status
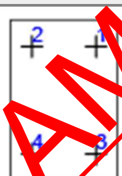	B1	LE1	1.4	1.0	1.0	244.2	1.1	1.8	OK
	B2	LE1	1.4	1.0	1.0	244.2	1.1	1.8	OK
	B3	LE1	69.1	1.0	49.0	244.2	1.1	36.1	OK
	B4	LE1	69.1	1.0	49.0	244.2	1.1	36.1	OK

Design data

Name	$F_{t,Rd}$ [kN]	$B_{p,Rd}$ [kN]	$F_{v,Rd}$ [kN]
M20 8.8 - 1	141.1	290.0	94.1

Detailed result for B3

Tension resistance check (EN 1993-1-8 tab 3.4)

$F_{t,Rd} = \frac{k_2 f_{ub} A_s}{\gamma_{M2}} =$ 141.1 kN ≥ $F_t =$ 69.1 kN

where:

$k_2 = 0.90$ – Factor

$f_{ub} = 800.0$ MPa – Ultimate tensile strength of the bolt

$A_s = 245$ mm^2 – Tensile stress area of the bolt

$\gamma_{M2} = 1.25$ – Safety factor

Punching resistance check (EN 1993-1-8 tab 3.4)

$B_{p,Rd} = \frac{0.6 \pi d_m t_p f_u}{\gamma_{M2}} =$ 290.0 kN ≥ $F_t =$ 69.1 kN

where:

$d_m = 32$ mm – The mean of the across points and across flats dimensions of the bolt head or the nut, whichever is smaller

$t_p = 14$ mm – Thickness

$f_u = 430.0$ MPa – Ultimate strength

$\gamma_{M2} = 1.25$ – Safety factor

Shear resistance check (EN 1993-1-8 tab 3.4)

$F_{v,Rd} = \frac{\beta_p \alpha_v f_{ub} A}{\gamma_{M2}} =$ 94.1 kN ≥ $V =$ 1.0 kN

where:

$\beta_p = 1.00$ – Reducing factor

$\alpha_v = 0.60$ – Reducing factor

$f_{ub} = 800.0$ MPa – Ultimate tensile strength of the bolt

$A = 245$ mm^2 – Tensile stress area of the bolt

$\gamma_{M2} = 1.25$ – Safety factor

Bearing resistance check (EN 1993-1-8 tab 3.4)

$F_{b,Rd} = \frac{k_1 \alpha_b f_u d t}{\gamma_{M2}} =$ 244.2 kN ≥ $V =$ 1.0 kN

where:

$k_1 = \min(2.8\frac{e_2}{d_0} - 1.7, 1.4\frac{p_2}{d_0} - 1.7, 2.5) = 2.50$ – Factor for edge distance and bolt spacing perpendicular to the direction of load transfer

$\alpha_b = \min(\frac{e_1}{3d_0}, \frac{p_1}{3d_0} - \frac{1}{4}, \frac{f_{ub}}{f_u}, 1) = 1.00$ – Factor for end distance and bolt spacing in direction of load transfer

$e_2 = 43$ mm – Distance to the plate edge perpendicular to the shear force

$p_2 = \infty$ mm – Distance between bolts perpendicular to the shear force

$d_0 = 22$ mm – Bolt hole diameter

$e_1 = 312$ mm – Distance to the plate edge in the direction of the shear force

$p_1 = \infty$ mm – Distance between bolts in the direction of the shear force

$f_{ub} = 800.0$ MPa – Ultimate tensile strength of the bolt

$f_u = 430.0$ MPa – Ultimate strength

$d = 20$ mm – Nominal diameter of the fastener

$t = 14$ mm – Thickness of the plate

$\gamma_{M2} = 1.25$ – Safety factor

Interaction of tension and shear (EN 1993-1-8 tab 3.4)

$$U_{tts} = \frac{F_{v,Ed}}{F_{v,Rd}} + \frac{F_{t,Ed}}{1.4F_{t,Rd}} = 36.1 \ \%$$

Utilization in tension

$$U_{tt} = \frac{F_{t,Ed}}{\min(F_{t,Rd};B_{p,Rd})} = 49.0 \ \%$$

Utilization in shear

$$U_{ts} = \frac{V_{Ed}}{\min(F_{v,Rd};F_{b,Rd})} = 1.1 \ \%$$

Welds (Plastic redistribution)

Item	Edge	Throat th. [mm]	Length [mm]	Loads	$\sigma_{w,Ed}$ [MPa]	ε_{Pl} [%]	$\sigma_{\perp}$ [MPa]	$\tau_{\parallel}$ [MPa]	$\tau_{\perp}$ [MPa]	Ut [%]	Ut_c [%]	Status
EP1	C	◢8.5	324	LE1	214.6	0.0	91.6	93.1	-62.4	53.0	38.6	OK
EP1	RIB1	◢6.5 ◣	90	LE1	276.2	0.0	-102.7	106.6	-102.8	68.2	43.4	OK
		◢6.5 ◣	90	LE1	276.2	0.0	-102.7	-106.6	102.8	68.2	43.4	OK
C-w 2	RIB1	◢6.5 ◣	150	LE1	229.0	0.0	-51.9	-117.9	-51.9	56.6	29.0	OK
		◢6.5 ◣	150	LE1	228.9	0.0	-51.8	117.8	51.9	56.6	29.0	OK
EP1	RIB2	◢6.5 ◣	90	LE1	153.3	0.0	61.1	-53.5	61.0	37.9	28.3	OK
		◢6.5 ◣	90	LE1	153.1	0.0	61.1	53.4	-61.0	37.8	28.3	OK
C-w 1	RIB2	◢6.5 ◣	150	LE1	197.4	0.0	32.4	107.6	32.5	48.8	19.4	OK

		◢6.5 ◣	150	LE1	197.4	0.0	32.5	-107.6	-32.5	48.8	19.4	OK
B-bfl 1	STIFF1 a	◢6.5 ◣	98	LE1	55.1	0.0	5.1	18.3	25.9	13.6	7.7	OK
		◢6.5 ◣	98	LE1	104.9	0.0	32.8	51.6	-25.3	25.9	19.8	OK
B-w 1	STIFF1 a	◢6.5 ◣	181	LE1	42.7	0.0	13.8	17.1	-15.9	10.6	6.2	OK
		◢6.5 ◣	181	LE1	32.5	0.0	-12.5	0.2	-17.3	8.0	5.3	OK
B-tfl 1	STIFF1 a	◢6.5 ◣	98	LE1	23.2	0.0	10.7	-5.3	10.6	5.7	4.5	OK
		◢6.5 ◣	98	LE1	22.7	0.0	-9.8	9.6	-6.9	5.6	3.2	OK
B-bfl 1	STIFF1 b	◢6.5 ◣	98	LE1	104.8	0.0	33.[illegible]	-51.5	25.4	25.9	19.8	OK
		◢6.5 ◣	98	LE1	54.6	0.0	5.2	18.1	-25.6	13.5	7.7	OK
B-w 1	STIFF1 b	◢6.5 ◣	181	LE1	32.6	0.0	-12.4	-0.2	17.4	8.0	5.3	OK
		◢6.5 ◣	181	LE1	42.8	0.0	13.8	-17.1	16.0	10.6	6.2	OK
B-tfl 1	STIFF1 b	◢6.5 ◣	98	LE1	22.7	0.0	-9.8	-9.6	6.9	5.6	3.2	OK
		◢6.5 ◣	98	LE1	23.2	0.0	10.7	5.3	-10.6	5.7	4.5	OK
B-bfl 1	STIFF1 c	◢6.5 ◣	98	LE1	41.2	0.0	-22.7	-3.9	-19.5	10.2	8.0	OK
		◢6.5 ◣	98	LE1	26.0	0.0	10.1	-1.8	13.7	6.4	3.2	OK
B-w 1	STIFF1 c	◢6.5 ◣	181	LE1	27.7	0.0	6.0	7.2	-13.8	6.8	3.8	OK
		◢6.5 ◣	181	LE1	28.8	0.0	4.7	11.9	11.2	7.1	3.4	OK
B-tfl 1	STIFF1 c	◢6.5 ◣	98	LE1	20.0	0.0	9.9	7.7	-6.4	4.9	2.6	OK
		◢6.5 ◣	98	LE1	20.1	0.0	-9.8	-2.7	9.8	5.0	3.8	OK
B-bfl 1	STIFF1 d	◢6.5 ◣	98	LE1	25.8	0.0	10.2	1.7	-13.6	6.4	3.2	OK
		◢6.5 ◣	98	LE1	41.4	0.0	-22.8	3.8	19.6	10.2	8.0	OK
B-w 1	STIFF1 d	◢6.5 ◣	181	LE1	28.7	0.0	4.7	-11.9	-11.2	7.1	3.4	OK
		◢6.5 ◣	181	LE1	27.7	0.0	6.0	-7.3	13.8	6.9	3.7	OK
B-tfl 1	STIFF1 d	◢6.5 ◣	98	LE1	20.1	0.0	-9.8	2.7	-9.8	5.0	3.8	OK

		◢6.5 ◣	98	LE1	20.0	0.0	9.9	-7.7	6.4	4.9	2.6	OK

Design data

	β_w [-]	$\sigma_{w,Rd}$ [MPa]	0.9 σ [MPa]
S 275	0.85	404.7	309.6

Detailed result for EP1 RIB1

Weld resistance check (EN 1993-1-8 4.5.3.2)

$\sigma_{w,Rd} = f_u/(\beta_w \gamma_{M2}) =$ 404.7 MPa ≥ $\sigma_{w,Ed} = [\sigma_\perp^2 + 3(\tau_\perp^2 + \tau_\parallel^2)]^{0.5} =$ 276.2 MPa

$\sigma_{\perp,Rd} = 0.9 f_u/\gamma_{M2} =$ 309.6 MPa ≥ $|\sigma_\perp| =$ 102.7 MPa

where:

$f_u =$ 430.0 MPa – Ultimate strength

$\beta_w =$ 0.85 – appropriate correlation factor taken from Table 4.1

$\gamma_{M2} =$ 1.25 – Safety factor

Stress utilization

$U_t = \max(\frac{\sigma_{w,Ed}}{\sigma_{w,Rd}}; \frac{|\sigma_\perp|}{\sigma_{\perp,Rd}}) =$ 68.2 %

Buckling

Loads	Shape	Factor [-]
LE1	1	32.41
	2	41.98
	3	47.69
	4	47.89
	5	60.24
	6	63.92

Bill of material

Manufacturing operations

Name	Plates [mm]	Shape	Nr.	Welds [mm]	Length [mm]	Bolts	Nr.

02 TOWERFIELDS WESTERHAM ROAD
BROMLEY, BR2 6HF
Email: info@Pearlepp.co.uk
Website: www. pearlepp.co.uk
Tel no. 02035763199

EP1	P20.0x200.0-300.0 (S 275)	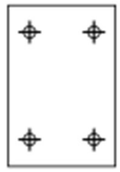	1	Fillet: a = 8.5	324.2	M20 8.8	4
RIB1	P10.0x90.0-150.0 (S 275)		1	Double fillet: a = 6.5	240.0		
RIB2	P10.0x90.0-150.0 (S 275)		1	Double fillet: a = 6.5	240.0		
STIFF1	P10.0x98.2-181.2 (S 275)	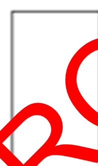	4	Double fillet: a = 6.5	1510.4		

Welds

Type	Material	Throat thickness [mm]	Leg size [mm]	Length [mm]
Fillet	S 275	8.5	12.0	324.2
Double fillet	S 275	6.5	9.2	1990.4

Bolts

Name	Grip length [mm]	Count
M20 8.8	34	4

02 TOWERFIELDS WESTERHAM ROAD
BROMLEY, BR2 6HF
Email: info@Pearlepp.co.uk
Website: www. pearlepp.co.uk
Tel no. 02035763199

Drawing

EP1

P20.0x300-200 (S 275)

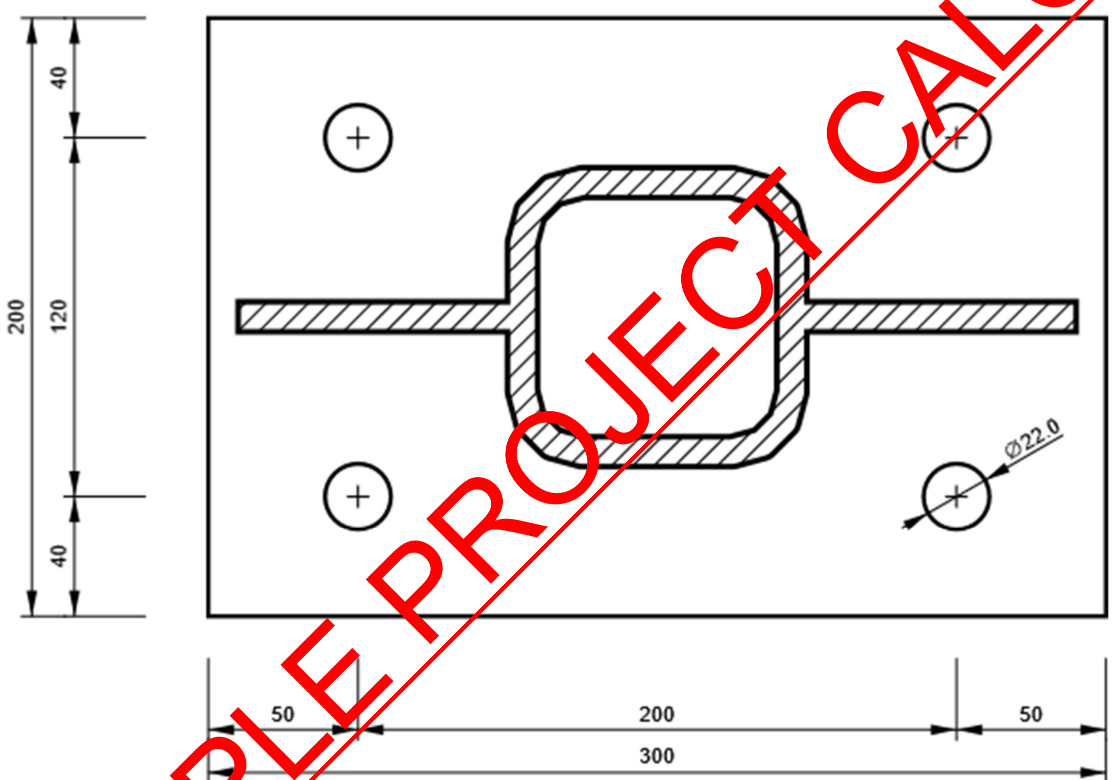

RIB1

P10.0x150-90 (S 275)

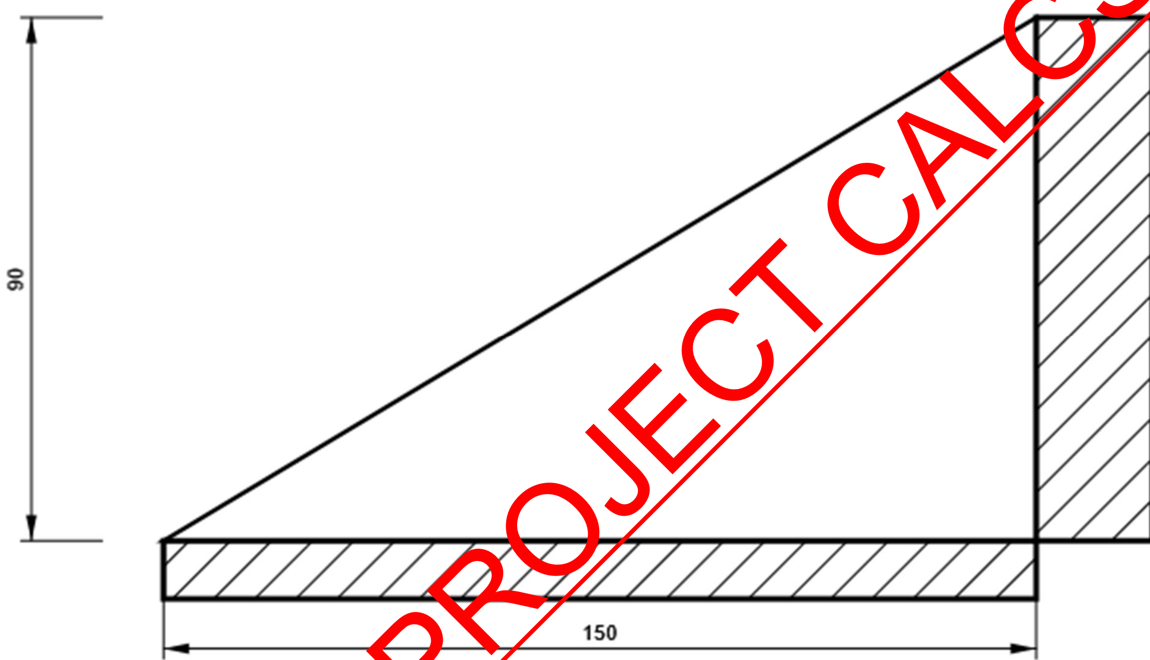

PEPP 02 TOWERFIELDS WESTERHAM ROAD BROMLEY, BR2 6HF Email: info@Pearlepp.co.uk Website: www. pearlepp.co.uk Tel no. 02035763199	**Project:** 68 GROVE PARK RD UK		**Sheet No./Rev.** 296
	Job Ref. 2024-06-	**Structural Engineer** **MM**	**Date** **11/06/2024**

RIB2

P10.0x150-90 (S 275)

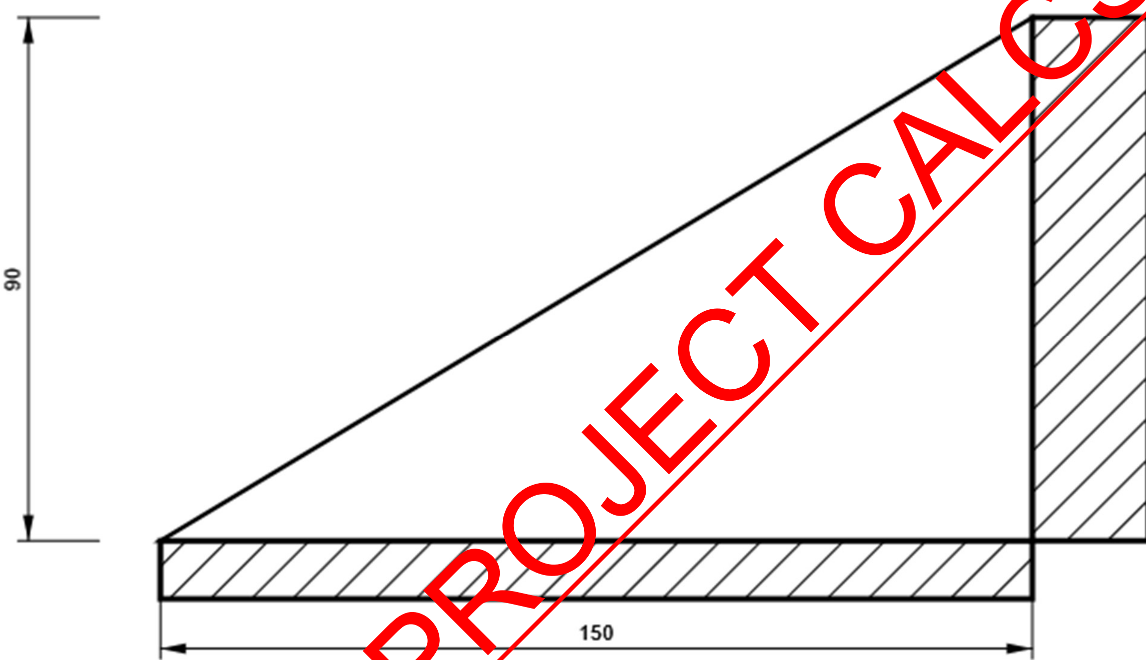

PEARL ENGINEERS, PLANNERS & PROJECT MANAGERS 02 TOWERFIELDS WESTERHAM ROAD BROMLEY, BR2 6HF Email: info@Pearlepp.co.uk Website: www. pearlepp.co.uk Tel no. 02035763199	**Project:** 68 GROVE PARK RD UK		**Sheet No./Rev.** 297
	Job Ref. 2024-06-	**Structural Engineer** **MM**	**Date** **11/06/2024**

STIFF1

P10.0x181-98 (S 275)

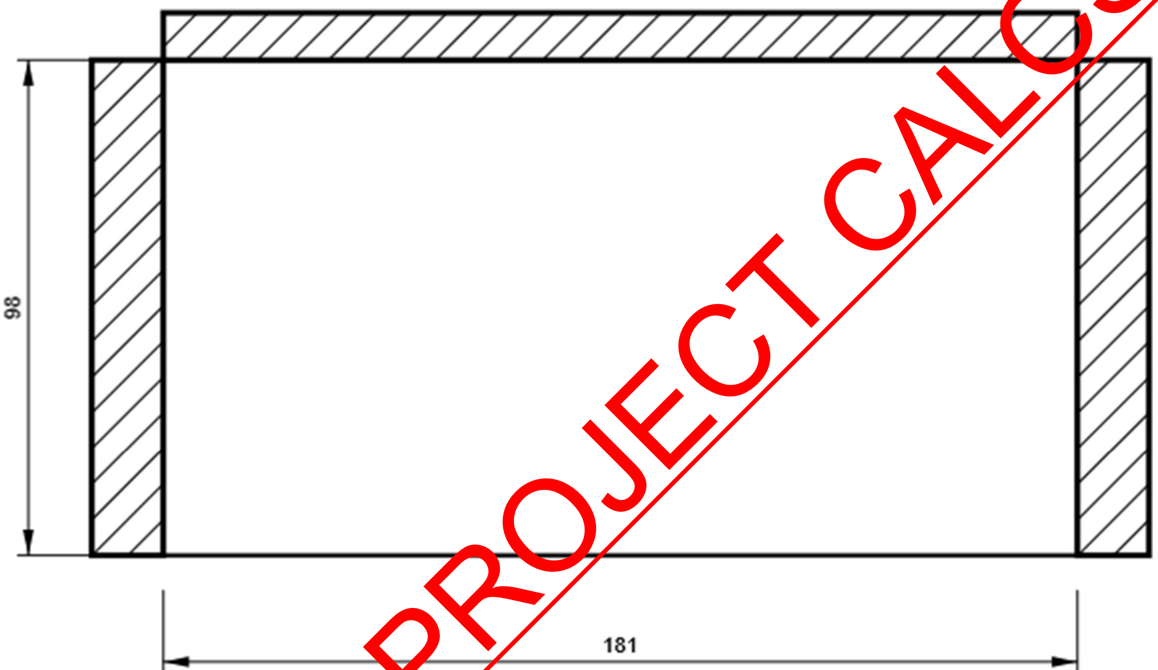

B, UC 203 x 203 x 60 - Bottom flange 1:

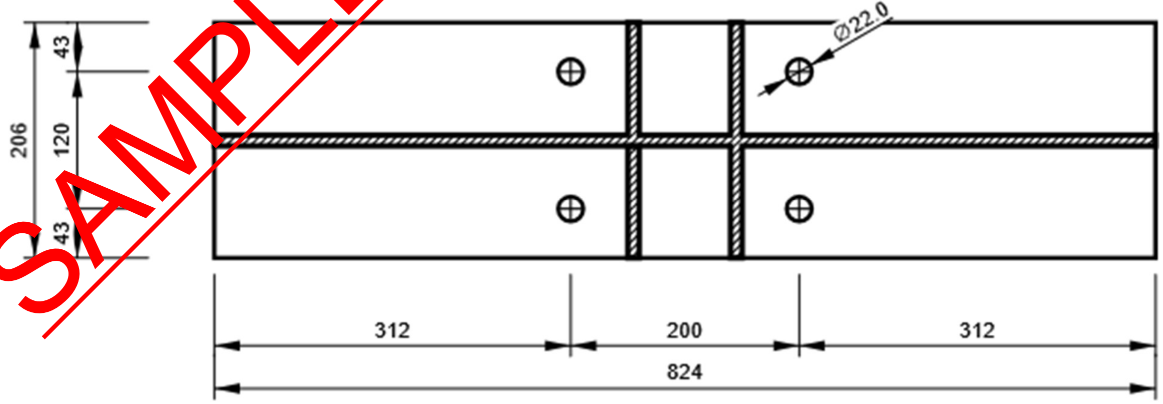

PEPP PEARL ENGINEERS, PLANNERS & PROJECT MANAGERS 02 TOWERFIELDS WESTERHAM ROAD BROMLEY, BR2 6HF Email: info@Pearlepp.co.uk Website: www. pearlepp.co.uk Tel no. 02035763199	**Project:** 68 GROVE PARK RD UK		**Sheet No./Rev.** 298
	Job Ref. 2024-06-	**Structural Engineer** **MM**	**Date** **11/06/2024**

- **Connection-10**

Project data

Project name	
Project number	
Author	
Description	
Date	
Design code	EN

Material

Steel	S 275

Project item CON10

Design

Name	CON10
Description	
Analysis	Stress, strain/ simplified loading

Beams and columns

Name	Cross-section	β – Direction [°]	γ - Pitch [°]	α - Rotation [°]	Offset ex [mm]	Offset ey [mm]	Offset ez [mm]	Forces in
C	3 - SHS100/100/10.0	0.0	90.0	0.0	0	0	0	Bolts
B	2 - UC 203 x 203 x 46	0.0	0.0	0.0	0	0	0	Bolts

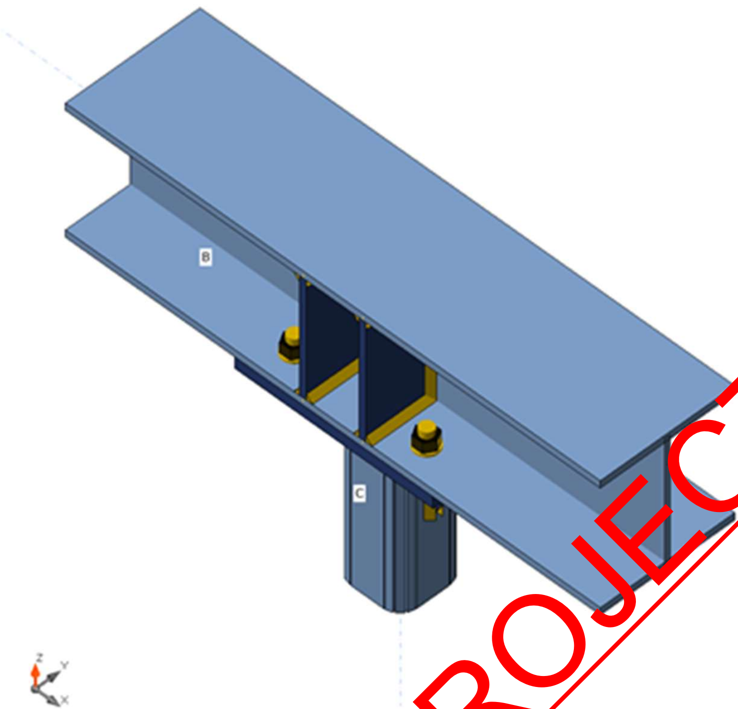

B
C

PEPP PEARL ENGINEERS, PLANNERS & PROJECT MANAGERS 02 TOWERFIELDS WESTERHAM ROAD BROMLEY, BR2 6HF Email: info@Pearlepp.co.uk Website: www. pearlepp.co.uk Tel no. 02035763199	**Project:** 68 GROVE PARK RD UK		**Sheet No./Rev.** 300
	Job Ref. 2024-06-	**Structural Engineer** **MM**	**Date** **11/06/2024**

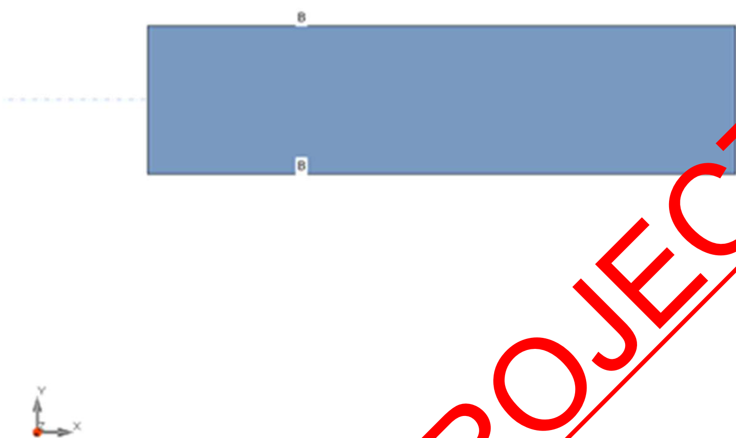

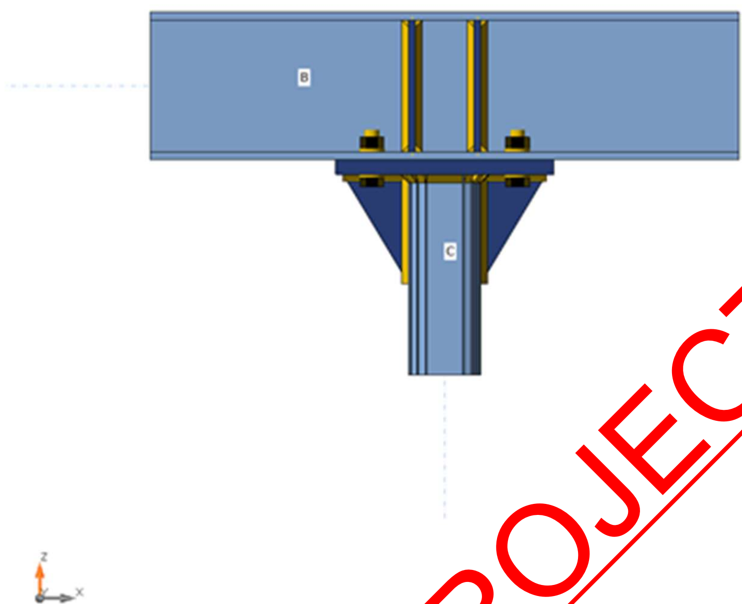

B
C

02 TOWERFIELDS WESTERHAM ROAD BROMLEY, BR2 6HF Email: info@Pearlepp.co.uk Website: www. pearlepp.co.uk Tel no. 02035763199	**Project:** 68 GROVE PARK RD UK		**Sheet No./Rev.** 302
	Job Ref. 2024-06-	**Structural Engineer** **MM**	**Date** **11/06/2024**

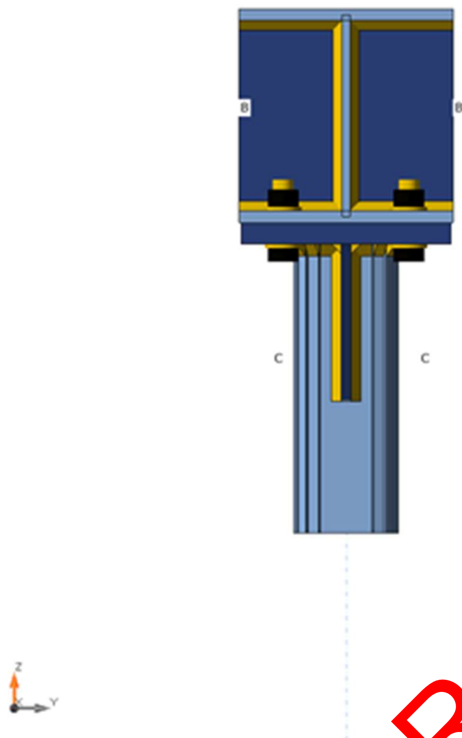

Cross-sections

Name	Material
3 - SHS100/100/10.0	S 275
2 - UC 203 x 203 x 46	S 275

Cross-sections

Name	Material	Drawing
3 - SHS100/100/10.0	S 275	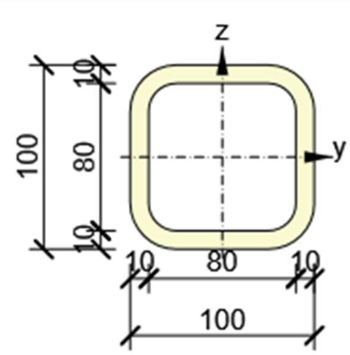

2 - UC 203 x 203 x 46	S 275	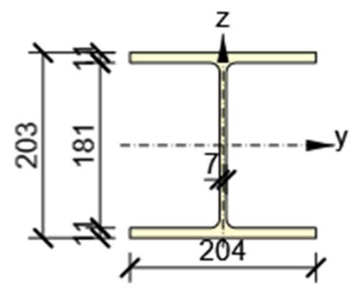

Bolts

Name	Bolt assembly	Diameter [mm]	fu [MPa]	Gross area [mm²]
M20 8.8	M20 8.8	20	800.0	314

Load effects (equilibrium not required)

Name	Member	N [kN]	Vy [kN]	Vz [kN]	Mx [kNm]	My [kNm]	Mz [kNm]
LE1	B	0.0	0.0	15.0	0.0	15.0	0.0
	B	0.0	0.0	-15.0	0.0	10.0	0.0

Check

Summary

Name	Value	Status
Analysis	100.0%	OK
Plates	0.7 < 5.0%	OK
Bolts	47.9 < 100%	OK
Welds	72.5 < 100%	OK
Buckling	32.70	
GMNA	Calculated	

Plates

Name	Material	Thickness [mm]	Loads	σ_{Ed} [MPa]	ε_{Pl} [%]	σc_{Ed} [MPa]	Status
C	S 275	10.0	LE1	276.5	0.7	0.0	OK
B-bfl 1	S 275	11.0	LE1	275.3	0.2	44.8	OK
B-tfl 1	S 275	11.0	LE1	49.5	0.0	0.0	OK

B-w 1	S 275	7.2	LE1	173.7	0.0	0.0	OK
EP1	S 355	20.0	LE1	194.5	0.0	44.8	OK
RIB1	S 355	10.0	LE1	355.3	0.2	0.0	OK
RIB2	S 355	10.0	LE1	296.5	0.0	0.0	OK
STIFF1a	S 355	10.0	LE1	190.8	0.0	0.0	OK
STIFF1b	S 355	10.0	LE1	190.7	0.0	0.0	OK
STIFF1c	S 355	10.0	LE1	58.6	0.0	0.0	OK
STIFF1d	S 355	10.0	LE1	58.6	0.0	0.0	OK

Design data

Material	f_y [MPa]	ε_{lim} [%]
S 275	275.0	5.0
S 355	355.0	5.0

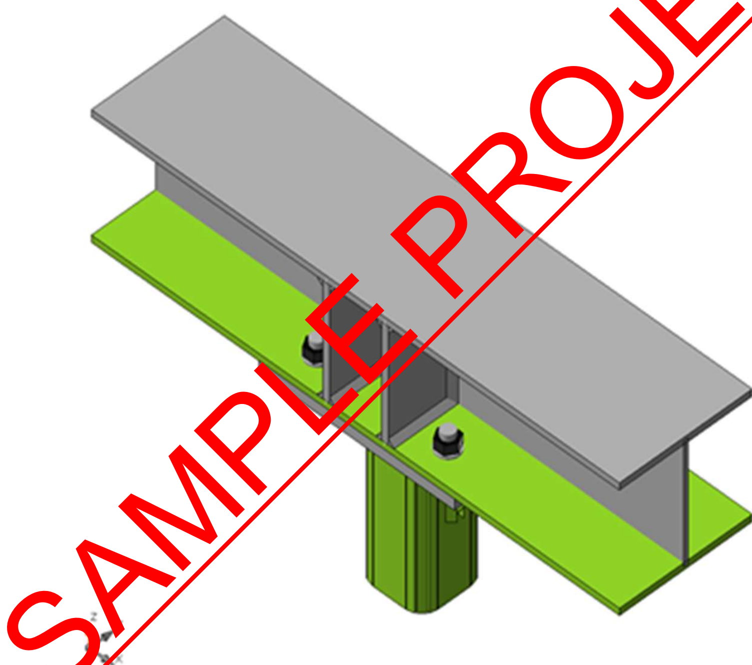

Overall check, LE1

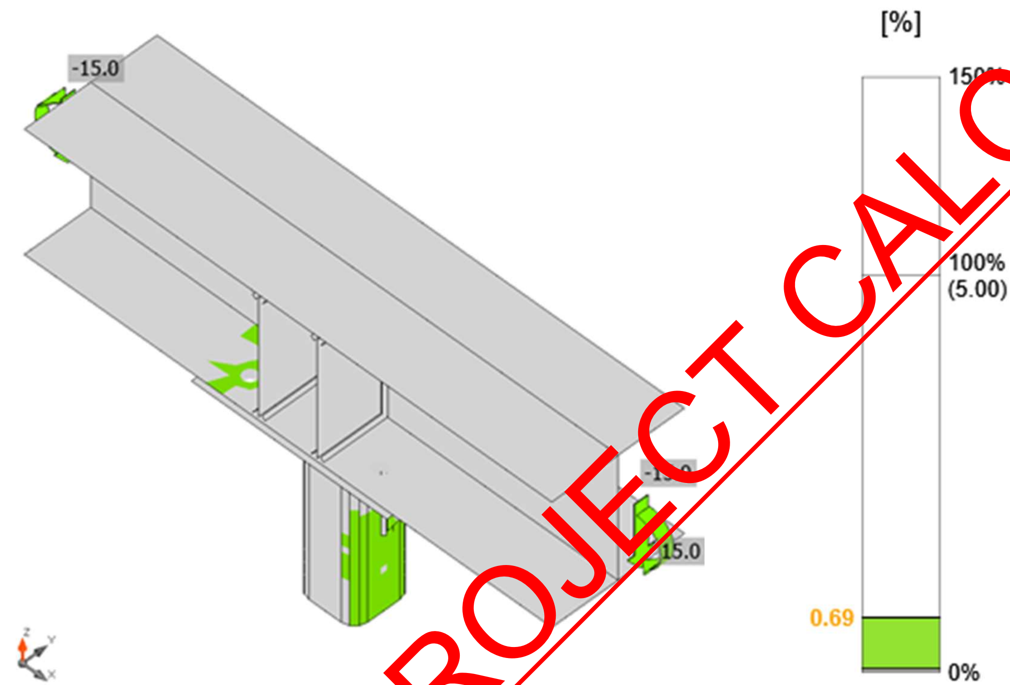

Strain check, LE1

PEPP
PEARL ENGINEERS, PLANNERS & PROJECT MANAGERS
02 TOWERFIELDS WESTERHAM ROAD
BROMLEY, BR2 6HF
Email: info@Pearlepp.co.uk
Website: www. pearlepp.co.uk
Tel no. 02035763199

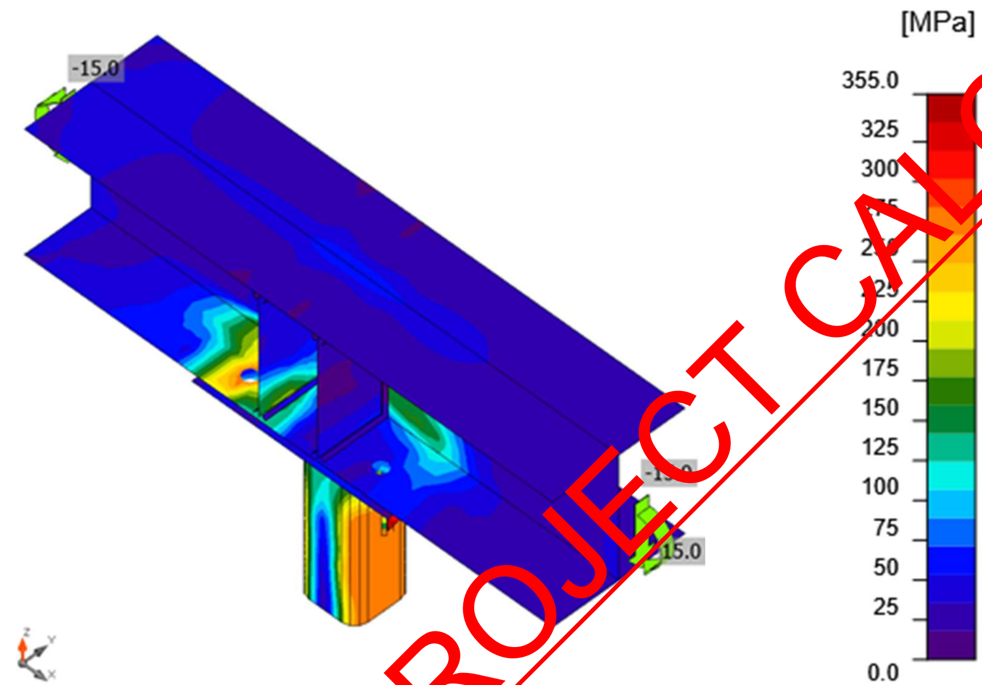

Equivalent stress, LE1

Bolts

	Name	Loads	$F_{t,Ed}$ [kN]	V [kN]	Ut_t [%]	$F_{b,Rd}$ [kN]	Ut_s [%]	Ut_{ts} [%]	Status
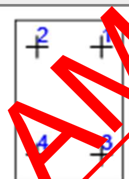	B1	LE1	2.9	1.2	2.1	189.2	1.2	2.7	OK
	B2	LE1	3.0	1.1	2.1	189.2	1.2	2.7	OK
	B3	LE1	67.5	1.3	47.9	136.8	1.3	35.5	OK
	B4	LE1	67.5	1.3	47.8	136.7	1.3	35.5	OK

Design data

Name	$F_{t,Rd}$ [kN]	$B_{p,Rd}$ [kN]	$F_{v,Rd}$ [kN]
M20 8.8 - 1	141.1	224.7	94.1

Detailed result for B3

Tension resistance check (EN 1993-1-8 tab 3.4)

$F_{t,Rd} = \frac{k_2 f_{ub} A_s}{\gamma_{M2}} =$ 141.1 kN ≥ $F_t =$ 67.5 kN

where:

$k_2 =$ 0.90 – Factor

$f_{ub} =$ 800.0 MPa – Ultimate tensile strength of the bolt

$A_s =$ 245 mm^2 – Tensile stress area of the bolt

$\gamma_{M2} =$ 1.25 – Safety factor

Punching resistance check (EN 1993-1-8 tab 3.4)

$B_{p,Rd} = \frac{0.6 \pi d_m t_p f_u}{\gamma_{M2}} =$ 224.7 kN ≥ $F_t =$ 67.5 kN

where:

$d_m =$ 32 mm – The mean of the across points and across flats dimensions of the bolt head or the nut, whichever is smaller

$t_p =$ 11 mm – Thickness

$f_u =$ 430.0 MPa – Ultimate strength

$\gamma_{M2} =$ 1.25 – Safety factor

Shear resistance check (EN 1993-1-8 tab 3.4)

$F_{v,Rd} = \frac{\beta_p \alpha_v f_{ub} A}{\gamma_{M2}} =$ 94.1 kN ≥ $V =$ 1.3 kN

where:

$\beta_p =$ 1.00 – Reducing factor

$\alpha_v =$ 0.60 – Reducing factor

$f_{ub} =$ 800.0 MPa – Ultimate tensile strength of the bolt

$A =$ 245 mm^2 – Tensile stress area of the bolt

$\gamma_{M2} =$ 1.25 – Safety factor

Bearing resistance check (EN 1993-1-8 tab 3.4)

$F_{b,Rd} = \frac{k_1 \alpha_b f_u d t}{\gamma_{M2}} =$ 136.8 kN ≥ $V =$ 1.3 kN

where:

$k_1 = \min(2.8\frac{e_2}{d_0} - 1.7, 1.4\frac{p_2}{d_0} - 1.7, 2.5) =$ 2.50 – Factor for edge distance and bolt spacing perpendicular to the direction of load transfer

$\alpha_b = \min(\frac{e_1}{3d_0}, \frac{p_1}{3d_0} - \frac{1}{4}, \frac{f_{ub}}{f_u}, 1) =$ 0.72 – Factor for end distance and bolt spacing in direction of load transfer

$e_2 =$ 42 mm – Distance to the plate edge perpendicular to the shear force

02 TOWERFIELDS WESTERHAM ROAD
BROMLEY, BR2 6HF
Email: info@Pearlepp.co.uk
Website: www. pearlepp.co.uk
Tel no. 02035763199

$p_2 = \infty$ mm – Distance between bolts perpendicular to the shear force

$d_0 = 22$ mm – Bolt hole diameter

$e_1 = 48$ mm – Distance to the plate edge in the direction of the shear force

$p_1 = \infty$ mm – Distance between bolts in the direction of the shear force

$f_{ub} = 800.0$ MPa – Ultimate tensile strength of the bolt

$f_u = 430.0$ MPa – Ultimate strength

$d = 20$ mm – Nominal diameter of the fastener

$t = 11$ mm – Thickness of the plate

$\gamma_{M2} = 1.25$ – Safety factor

Interaction of tension and shear (EN 1993-1-8 tab 3.4)

$$U_{tts} = \frac{F_{v,Ed}}{F_{v,Rd}} + \frac{F_{t,Ed}}{1.4F_{t,Rd}} = \quad 35.5 \quad \%$$

Utilization in tension

$$U_{tt} = \frac{F_{t,Ed}}{\min(F_{t,Rd};B_{p,Rd})} = \quad 47.9 \quad \%$$

Utilization in shear

$$U_{ts} = \frac{V_{Ed}}{\min(F_{v,Rd};F_{b,Rd})} = \quad 1.3 \quad \%$$

Welds (Plastic redistribution)

Item	Edge	Throat th. [mm]	Length [mm]	Loads	$\sigma_{w,Ed}$ [MPa]	ε_{Pl} [%]	$\sigma_\perp$ [MPa]	$\tau_{\parallel}$ [MPa]	$\tau_\perp$ [MPa]	Ut [%]	Ut_c [%]	Status
EP1	C	◢8.5 ◣	324	LE1	191.3	0.0	79.4	84.0	-55.2	47.3	34.7	OK
EP1	RIB1	◢6.5 ◣	90	LE1	293.4	0.0	-130.4	77.7	-130.4	72.5	43.8	OK
		◢6.5 ◣	90	LE1	292.4	0.0	-130.3	-76.2	130.5	72.3	43.6	OK
C-w [illegible]	RIB1	◢6.5 ◣	150	LE1	267.3	0.0	-45.4	-145.1	-45.4	66.0	29.1	OK
		◢6.5 ◣	150	LE1	267.2	0.0	-45.3	145.1	45.4	66.0	29.1	OK
EP1	RIB2	◢6.5 ◣	90	LE1	133.4	0.0	53.6	-45.9	53.5	33.0	25.1	OK
		◢6.5 ◣	90	LE1	133.3	0.0	53.6	45.8	-53.5	32.9	25.1	OK
C-w 1	RIB2	◢6.5 ◣	150	LE1	225.1	0.0	29.3	125.5	29.3	55.6	17.4	OK

PEPP
PEARL ENGINEERS, PLANNERS & PROJECT MANAGERS

02 TOWERFIELDS WESTERHAM ROAD
BROMLEY, BR2 6HF
Email: info@Pearlepp.co.uk
Website: www. pearlepp.co.uk
Tel no. 02035763199

		◢6.5 ◣	150	LE1	225.2	0.0	29.3	-125.5	-29.3	55.6	17.4	OK
B-bfl 1	STIFF1 a	◢6.5 ◣	98	LE1	49.1	0.0	-13.7	27.1	2.3	12.1	10.4	OK
		◢6.5 ◣	98	LE1	126.3	0.0	54.3	53.7	-38.2	31.2	23.0	OK
B-w 1	STIFF1 a	◢6.5 ◣	181	LE1	44.9	0.0	28.6	15.7	12.3	11.1	6.6	OK
		◢6.5 ◣	181	LE1	27.0	0.0	-22.6	-5.8	6.3	7.3	4.7	OK
B-tfl 1	STIFF1 a	◢6.5 ◣	98	LE1	21.5	0.0	9.8	-5.5	9.6	5.3	4.7	OK
		◢6.5 ◣	98	LE1	20.3	0.0	-9.8	8.[illegible]	-5.1	5.0	3.3	OK
B-bfl 1	STIFF1 b	◢6.5 ◣	98	LE1	125.0	0.0	53.5	-53.3	37.6	30.9	23.0	OK
		◢6.5 ◣	98	LE1	49.4	0.0	-14.0	27.3	-1.8	12.2	10.4	OK
B-w 1	STIFF1 b	◢6.5 ◣	181	LE1	27.1	0.0	-22.6	5.8	-6.3	7.3	4.7	OK
		◢6.5 ◣	181	LE1	44.8	0.0	28.5	-15.7	-12.3	11.1	6.6	OK
B-tfl 1	STIFF1 b	◢6.5 ◣	98	LE1	20.2	0.0	-9.8	-8.9	5.1	5.0	3.3	OK
		◢6.5 ◣	98	LE1	21.5	0.0	9.8	5.5	-9.6	5.3	4.7	OK
B-bfl 1	STIFF1 c	◢6.5 ◣	98	LE1	27.8	0.0	-16.4	-2.0	-12.8	6.9	6.3	OK
		◢6.5 ◣	98	LE1	17.5	0.0	14.1	0.7	6.0	4.6	2.4	OK
B-w 1	STIFF1 c	◢6.5 ◣	181	LE1	18.9	0.0	6.0	9.0	-5.1	4.7	2.7	OK
		◢6.5 ◣	181	LE1	22.6	0.0	4.1	10.1	8.0	5.6	2.9	OK
B-tfl 1	STIFF1 c	◢6.5 ◣	98	LE1	17.1	0.0	11.3	6.2	-4.0	4.2	2.6	OK
		◢6.5 ◣	98	LE1	17.8	0.0	-8.9	-1.4	8.8	4.4	3.7	OK
B-bfl 1	STIFF1 d	◢6.5 ◣	98	LE1	17.5	0.0	14.2	-0.8	-5.9	4.6	2.4	OK
		◢6.5 ◣	98	LE1	28.0	0.0	-16.4	1.8	13.0	6.9	6.3	OK
B-w 1	STIFF1 d	◢6.5 ◣	181	LE1	22.6	0.0	4.1	-10.1	-7.9	5.6	2.9	OK
		◢6.5 ◣	181	LE1	18.9	0.0	6.0	-9.0	5.1	4.7	2.7	OK
B-tfl 1	STIFF1 d	◢6.5 ◣	98	LE1	17.8	0.0	-8.9	1.4	-8.8	4.4	3.7	OK

		◢6.5 ◣	98	LE1	17.1	0.0	11.3	-6.2	4.0	4.2	2.6	OK

Design data

	β_w [-]	$\sigma_{w,Rd}$ [MPa]	0.9 σ [MPa]
S 275	0.85	404.7	309.6

Detailed result for EP1 RIB1

Weld resistance check (EN 1993-1-8 4.5.3.2)

$\sigma_{w,Rd} = f_u/(\beta_w \gamma_{M2}) =$ 404.7 MPa ≥ $\sigma_{w,Ed} = [\sigma_\perp^2 + 3(\tau_\perp^2 + \tau_\parallel^2)]^{0.5} =$ 293.4 MPa

$\sigma_{\perp,Rd} = 0.9 f_u/\gamma_{M2} =$ 309.6 MPa ≥ $|\sigma_\perp| =$ 130.4 MPa

where:

$f_u =$ 430.0 MPa – Ultimate strength

$\beta_w =$ 0.85 – appropriate correlation factor taken from Table 4.1

$\gamma_{M2} =$ 1.25 – Safety factor

Stress utilization

$U_t = \max(\frac{\sigma_{w,Ed}}{\sigma_{w,Rd}}; \frac{|\sigma_\perp|}{\sigma_{\perp,Rd}}) =$ 72.5 %

Buckling

Loads	Shape	Factor [-]
LE1	1	32.70
	2	35.33
	3	42.61
	4	51.54
	5	51.81
	6	55.33

Bill of material

Manufacturing operations

Name	Plates [mm]	Shape	Nr.	Welds [mm]	Length [mm]	Bolts	Nr.

EP1	P20.0x200.0-300.0 (S 355)	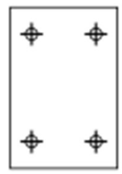	1	Fillet: a = 8.5	324.2	M20 8.8	4
RIB1	P10.0x90.0-150.0 (S 355)		1	Double fillet: a = 6.5	240.0		
RIB2	P10.0x90.0-150.0 (S 355)		1	Double fillet: a = 6.5	240.0		
STIFF1	P10.0x98.2-181.2 (S 355)		4	Double fillet: a = 6.5	1510.4		

Welds

Type	Material	Throat thickness [mm]	Leg size [mm]	Length [mm]
Fillet	S 275	8.5	12.0	324.2
Double fillet	S 275	6.5	9.2	1990.4

Bolts

Name	Grip length [mm]	Count
M20 8.8	31	4

Drawing

EP1

P20.0x300-200 (S 355)

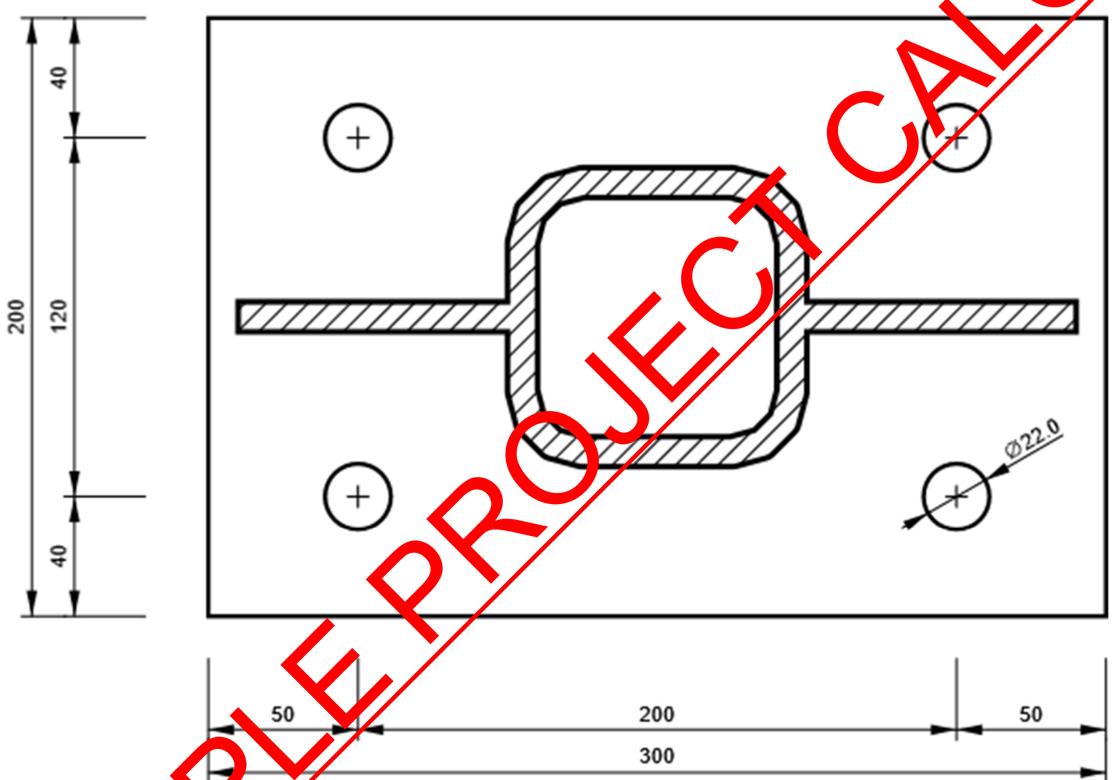

RIB1

P10.0x150-90 (S 355)

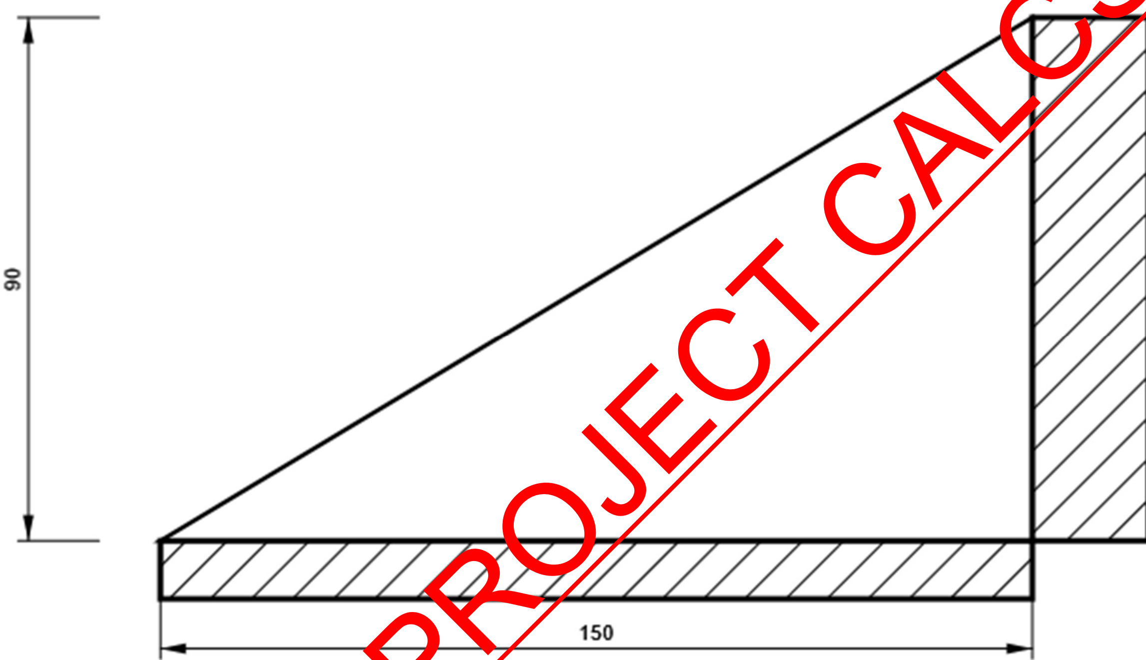

RIB2

P10.0x150-90 (S 355)

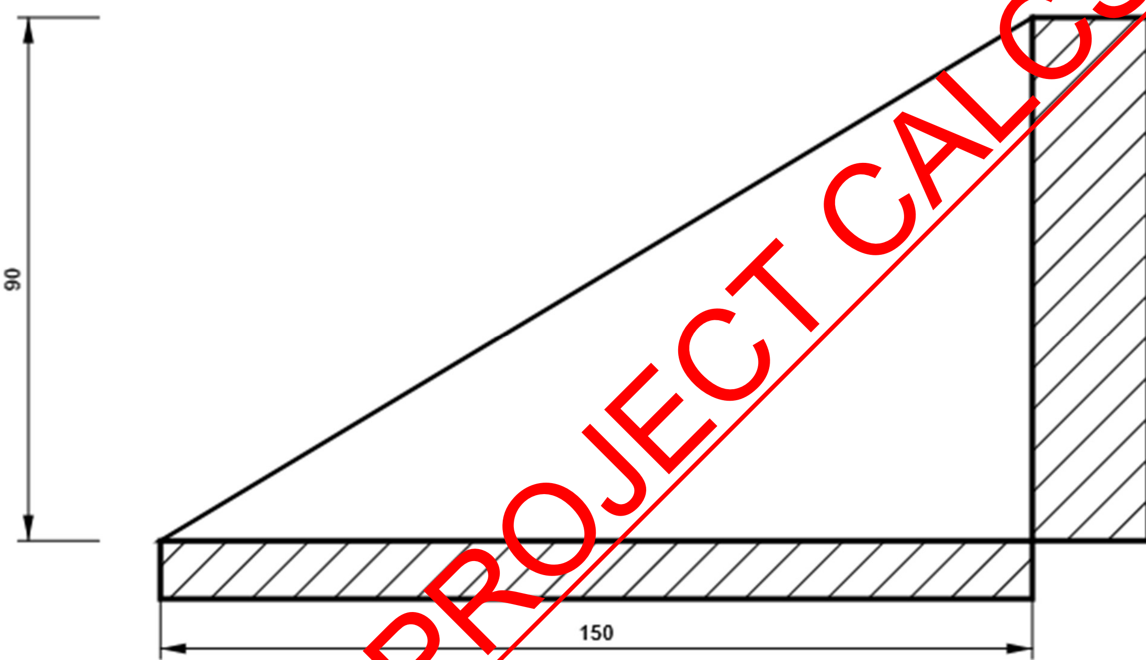

STIFF1

P10.0x181-98 (S 355)

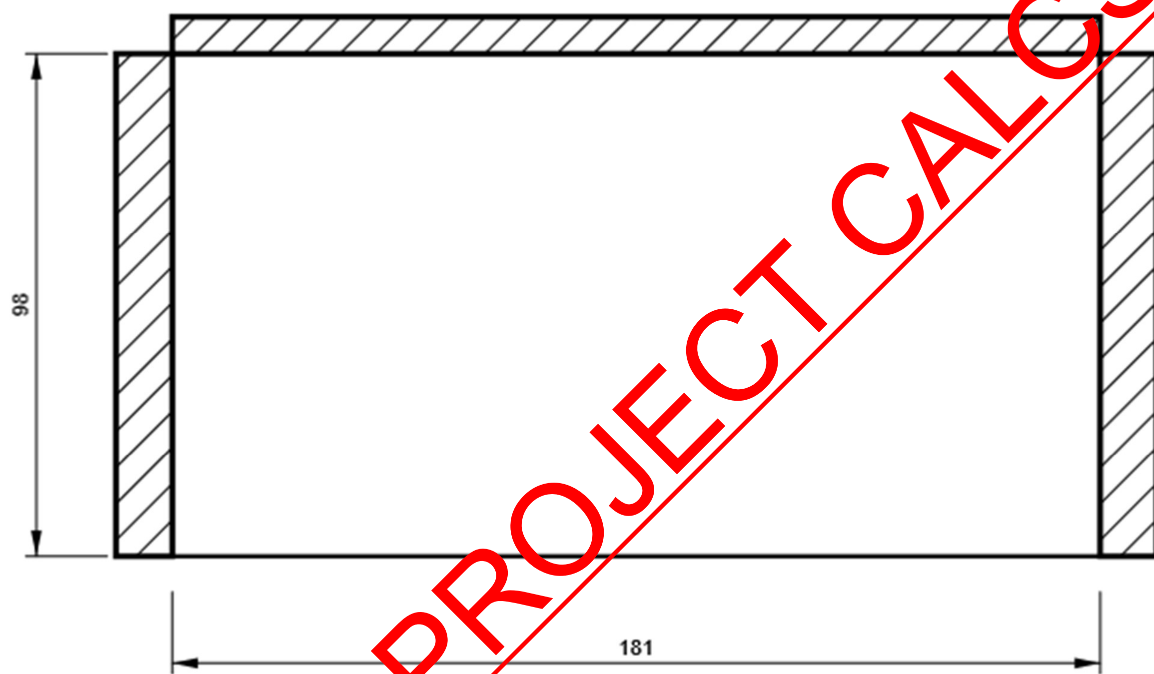

B, UC 203 x 203 x 46 - Bottom flange 1:

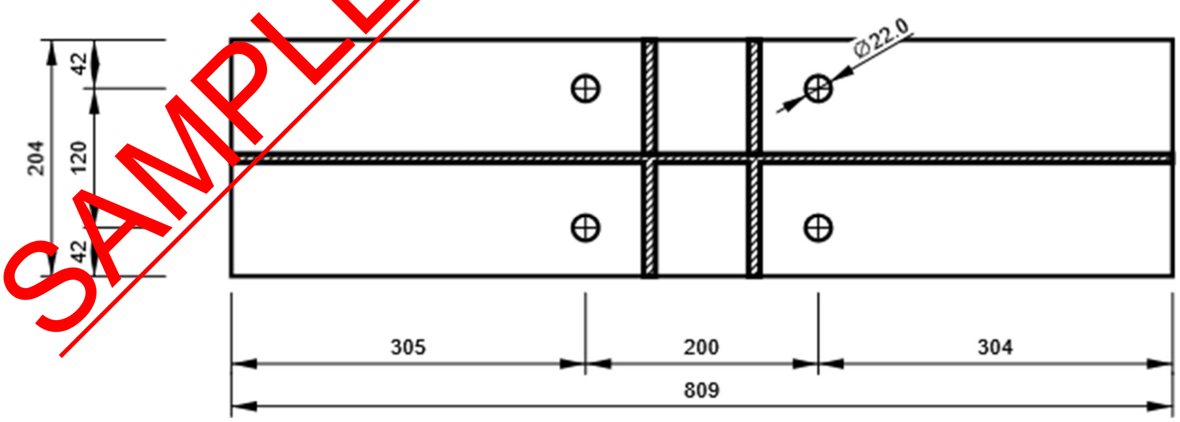

- **Connection-11**

Project data

Project name	
Project number	-
Author	
Description	Connection - 11
Date	
Design code	EN

Material

Steel	S 275,
Concrete	C25/30

Project item Connection - 11

Design

Name	Connection - 11
Description	
Analysis	Stress, strain/ loads in equilibrium

Beams and columns

Name	Cross-section	β – Direction [°]	γ - Pitch [°]	α - Rotation [°]	Offset ex [mm]	Offset ey [mm]	Offset ez [mm]	Forces in
M1	3 - UC 203 x 203 x 60	0.0	90.0	0.0	0	0	0	Bolts
M2	3 - UC 203 x 203 x 60	180.0	-38.0	0.0	0	0	0	Bolts

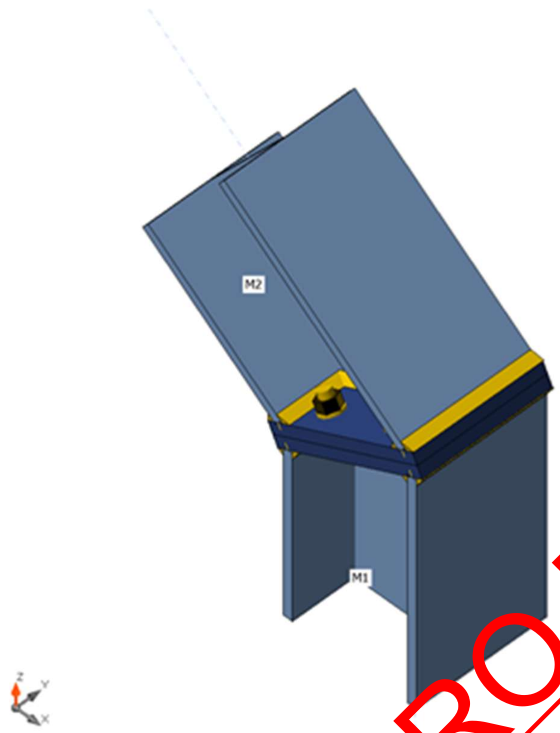
M2
M1

PEPP PEARL ENGINEERS, PLANNERS & PROJECT MANAGERS	**Project:** 68 GROVE PARK RD UK		**Sheet No./Rev.** 318
02 TOWERFIELDS WESTERHAM ROAD BROMLEY, BR2 6HF Email: info@Pearlepp.co.uk Website: www. pearlepp.co.uk Tel no. 02035763199	**Job Ref. 2024-06-**	**Structural Engineer** **MM**	**Date** **11/06/2024**

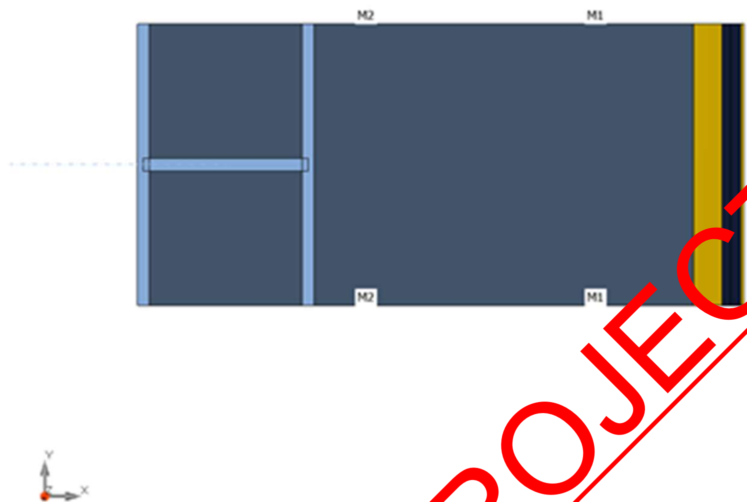

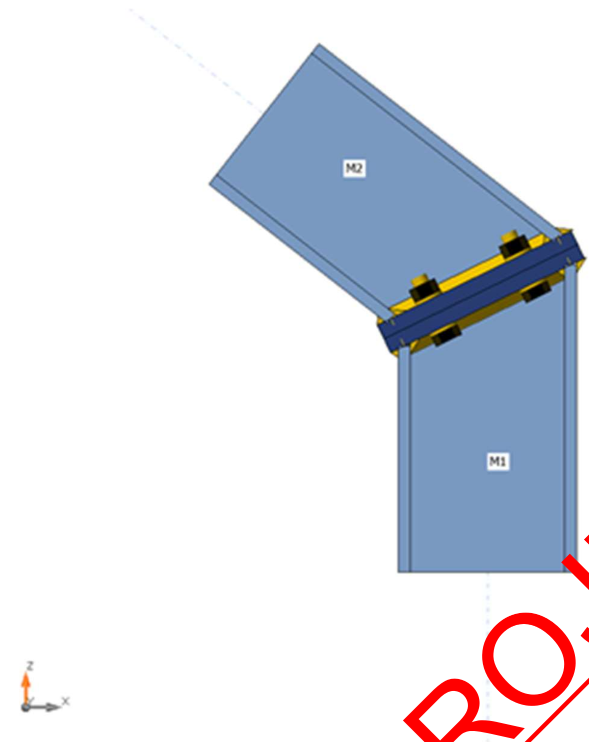
M2
M1
z
x

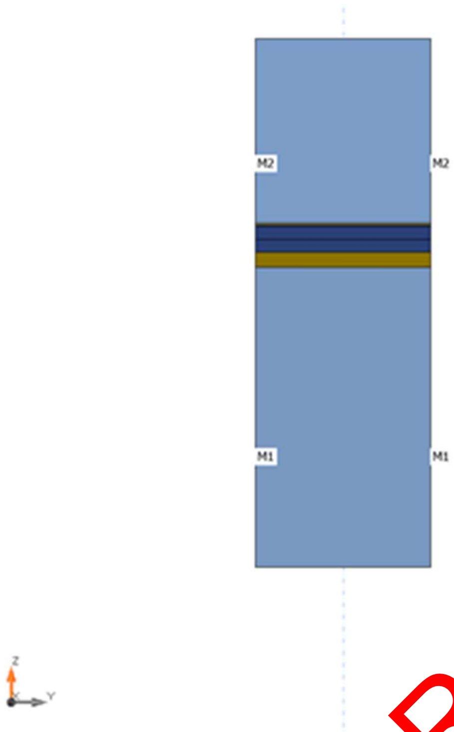

Cross-sections

Name	Material
3 - UC 203 x 203 x 60	S 275

Cross-sections

Name	Material	Drawing
3 - UC 203 x 203 x 60	S 275	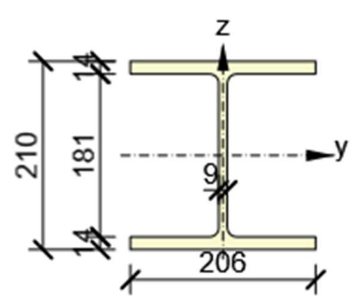

Bolts

Name	Bolt assembly	Diameter [mm]	fu [MPa]	Gross area [mm^2]
M20 8.8	M20 8.8	20	800.0	314

Load effects (forces in equilibrium)

Name	Member	N [kN]	Vy [kN]	Vz [kN]	Mx [kNm]	My [kNm]	Mz [kNm]
LE1	M1	0.0	0.0	0.0	0.0	0.0	0.0
	M2	-10.0	0.0	-20.0	0.0	21.0	0.0

Check

Summary

Name	Value	Status
Analysis	100.0%	OK
Plates	0.0 < 5.0%	OK
Bolts	45.1 < 100%	OK
Welds	26.4 < 100%	OK
Buckling	86.27	

Plates

Name	Material	Thickness [mm]	Loads	σ_{Ed} [MPa]	ε_{Pl} [%]	σc_{Ed} [MPa]	Status
M1-bfl 1	S 275	14.2	LE1	97.9	0.0	0.0	OK
M1-tfl 1	S 275	14.2	LE1	118.2	0.0	0.0	OK
M1-w 1	S 275	9.4	LE1	91.4	0.0	0.0	OK
M2-bfl 1	S 275	14.2	LE1	102.4	0.0	0.0	OK
M2-tfl 1	S 275	14.2	LE1	114.9	0.0	0.0	OK
M2-w 1	S 275	9.4	LE1	91.5	0.0	0.0	OK
PP1a	S 355	18.0	LE1	227.2	0.0	20.1	OK
PP1b	S 355	18.0	LE1	230.2	0.0	20.1	OK

Design data

Material	f_y [MPa]	ε_{lim} [%]
S 275	275.0	5.0
S 355	355.0	5.0

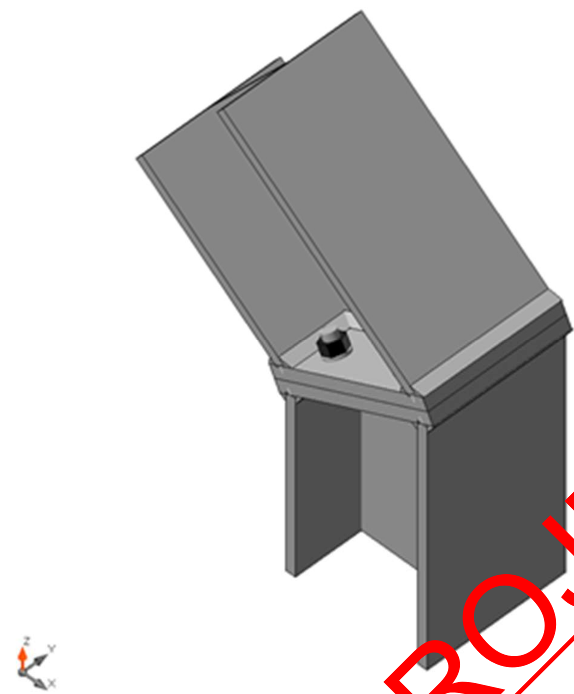

Overall check, LE1

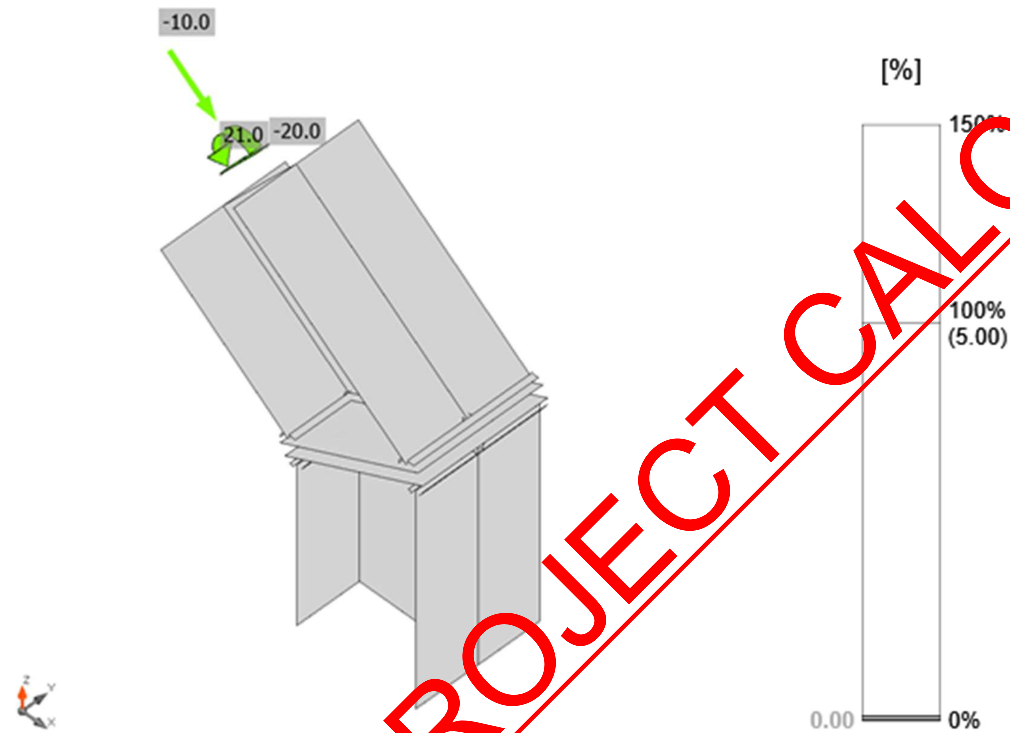

Strain check, LE1

PEPP PEARL ENGINEERS, PLANNERS & PROJECT MANAGERS	**Project:** 68 GROVE PARK RD UK		**Sheet No./Rev.** 324
02 TOWERFIELDS WESTERHAM ROAD BROMLEY, BR2 6HF Email: info@Pearlepp.co.uk Website: www. pearlepp.co.uk Tel no. 02035763199	**Job Ref. 2024-06-**	**Structural Engineer** **MM**	**Date** **11/06/2024**

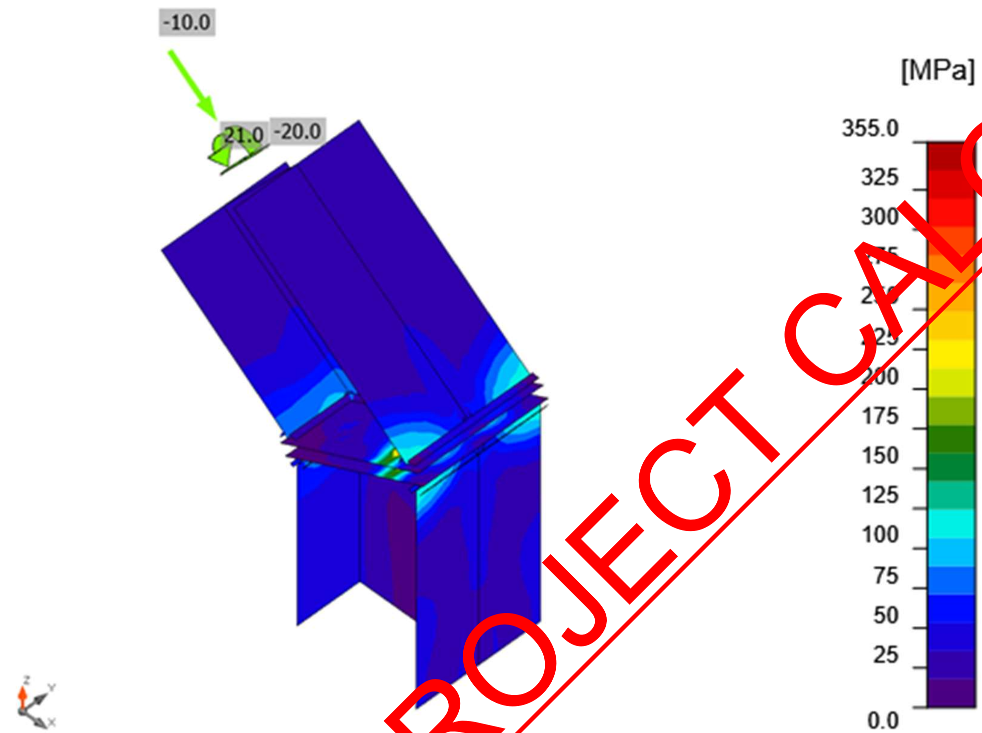

Equivalent stress, LE1

Bolts

	Name	Loads	$F_{t,Ed}$ [kN]	V [kN]	Ut_t [%]	$F_{b,Rd}$ [kN]	Ut_s [%]	Ut_{ts} [%]	Status
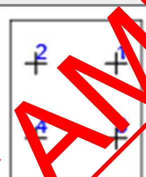	B1	LE1	63.7	3.3	45.1	352.8	3.5	35.8	OK
	B2	LE1	63.7	3.3	45.1	352.8	3.5	35.8	OK
	B3	LE1	7.6	3.5	5.4	352.8	3.7	7.5	OK
	B4	LE1	7.6	3.5	5.4	352.8	3.7	7.5	OK

Design data

Name	$F_{t,Rd}$ [kN]	$B_{p,Rd}$ [kN]	$F_{v,Rd}$ [kN]
M20 8.8 - 1	141.1	419.0	94.1

Detailed result for B1

Tension resistance check (EN 1993-1-8 tab 3.4)

$F_{t,Rd} = \frac{k_2 f_{ub} A_s}{\gamma_{M2}} =$ 141.1 kN ≥ $F_t =$ 63.7 kN

where:

$k_2 =$ 0.90 – Factor

$f_{ub} =$ 800.0 MPa – Ultimate tensile strength of the bolt

$A_s =$ 245 mm^2 – Tensile stress area of the bolt

$\gamma_{M2} =$ 1.25 – Safety factor

Punching resistance check (EN 1993-1-8 tab 3.4)

$B_{p,Rd} = \frac{0.6\pi d_m t_p f_u}{\gamma_{M2}} =$ 419.0 kN ≥ $F_t =$ 63.7 kN

where:

$d_m =$ 32 mm – The mean of the across points and across flats dimensions of the bolt head or the nut, whichever is smaller

$t_p =$ 18 mm – Thickness

$f_u =$ 490.0 MPa – Ultimate strength

$\gamma_{M2} =$ 1.25 – Safety factor

Shear resistance check (EN 1993-1-8 tab 3.4)

$F_{v,Rd} = \frac{\beta_p \alpha_v f_{ub} A}{\gamma_{M2}} =$ 94.1 kN ≥ $V =$ 3.3 kN

where:

$\beta_p =$ 1.00 – Reducing factor

$\alpha_v =$ 0.60 – Reducing factor

$f_{ub} =$ 800.0 MPa – Ultimate tensile strength of the bolt

$A =$ 245 mm^2 – Tensile stress area of the bolt

$\gamma_{M2} =$ 1.25 – Safety factor

Bearing resistance check (EN 1993-1-8 tab 3.4)

$F_{b,Rd} = \frac{k_1 \alpha_b f_u d t}{\gamma_{M2}} =$ 352.8 kN ≥ $V =$ 3.3 kN

where:

$k_1 = \min(2.8\frac{e_2}{d_0} - 1.7, 1.4\frac{p_2}{d_0} - 1.7, 2.5) =$ 2.50 – Factor for edge distance and bolt spacing perpendicular to the direction of load transfer

$\alpha_b = \min(\frac{e_1}{3d_0}, \frac{p_1}{3d_0} - \frac{1}{4}, \frac{f_{ub}}{f_u}, 1) =$ 1.00 – Factor for end distance and bolt spacing in direction of load transfer

$e_2 =$ 40 mm – Distance to the plate edge perpendicular to the shear force

$p_2 =$ 126 mm	– Distance between bolts perpendicular to the shear force
$d_0 =$ 22 mm	– Bolt hole diameter
$e_1 =$ 185 mm	– Distance to the plate edge in the direction of the shear force
$p_1 =$ 117 mm	– Distance between bolts in the direction of the shear force
$f_{ub} =$ 800.0 MPa	– Ultimate tensile strength of the bolt
$f_u =$ 490.0 MPa	– Ultimate strength
$d =$ 20 mm	– Nominal diameter of the fastener
$t =$ 18 mm	– Thickness of the plate
$\gamma_{M2} =$ 1.25	– Safety factor

Interaction of tension and shear (EN 1993-1-8 tab 3.4)

$$U_{tts} = \frac{F_{v,Ed}}{F_{v,Rd}} + \frac{F_{t,Ed}}{1.4F_{t,Rd}} = \quad 35.8 \quad \%$$

Utilization in tension

$$U_{tt} = \frac{F_{t,Ed}}{\min(F_{t,Rd};B_{p,Rd})} = \quad 45.1 \quad \%$$

Utilization in shear

$$U_{ts} = \frac{V_{Ed}}{\min(F_{v,Rd};F_{b,Rd})} = \quad 3.5 \quad \%$$

Welds (Plastic redistribution)

Item	Edge	Throat th. [mm]	Length l [mm]	Loads	$\sigma_{w,Ed}$ [MPa]	ε_{Pl} [%]	$\sigma_\perp$ [MPa]	$\tau_{\|\|}$ [MPa]	$\tau_\perp$ [MPa]	Ut [%]	Ut_c [%]	Status
PP1a	M1-bfl 1	◢8.5◣	206	LE1	58.1	0.0	-23.7	0.1	-30.6	13.3	7.9	OK
		◢8.5◣	206	LE1	114.9	0.0	-69.6	0.2	52.8	26.4	17.8	OK
PP1a	M1-tfl 1	◢8.5◣	206	LE1	50.7	0.0	-4.5	17.4	-23.5	11.6	8.5	OK
		◢8.5◣	206	LE1	83.9	0.0	29.1	-44.2	-10.6	19.3	14.8	OK
PP1a	M1-w 1	◢8.5◣	217	LE1	67.8	0.0	34.2	1.8	33.7	15.6	8.1	OK
		◢8.5◣	217	LE1	67.7	0.0	33.3	8.2	-33.1	15.5	8.1	OK
PP1b	M2-bfl 1	◢8.5◣	206	LE1	52.7	0.0	-17.9	0.0	-28.6	12.1	6.4	OK
		◢8.5◣	206	LE1	111.1	0.0	-74.9	-0.1	47.4	25.5	17.1	OK

PP1b	M2-tfl 1	◢8.5◣	206	LE1	49.5	0.0	-4.7	-16.8	-22.9	11.4	8.3	OK
		◢8.5◣	206	LE1	77.6	0.0	27.6	41.2	-7.2	17.8	14.5	OK
PP1b	M2-w 1	◢8.5◣	217	LE1	72.3	0.0	-20.5	-34.4	-20.4	16.6	9.2	OK
		◢8.5◣	217	LE1	72.3	0.0	-20.4	34.4	20.5	16.6	9.2	OK

Design data

	β_w [-]	$\sigma_{w,Rd}$ [MPa]	0.9 σ [MPa]
S 275	0.90	435.6	352.8

Detailed result for PP1a M1-bfl 1

Weld resistance check (EN 1993-1-8 4.5.3.2)

$\sigma_{w,Rd} = f_u/(\beta_w \gamma_{M2}) =$ 435.6 MPa $\geq$ $\sigma_{w,Ed} = [\sigma_\perp^2 + 3(\tau_\perp^2 + \tau_\parallel^2)]^{0.5} =$ 114.9 MPa

$\sigma_{\perp,Rd} = 0.9 f_u/\gamma_{M2} =$ 352.8 MPa $\geq$ $|\sigma_\perp| =$ 69.6 MPa

where:

$f_u =$ 490.0 MPa – Ultimate strength

$\beta_w =$ 0.90 – appropriate correlation factor taken from Table 4.1

$\gamma_{M2} =$ 1.25 – Safety factor

Stress utilization

$U_t = \max(\frac{\sigma_{w,Ed}}{\sigma_{w,Rd}}; \frac{|\sigma_\perp|}{\sigma_{\perp,Rd}}) =$ 26.4 %

Buckling

Loads	Shape	Factor [-]
LE1	1	86.27
	2	109.17
	3	121.67
	4	138.42
	5	149.24
	6	157.48

Bill of material

Manufacturing operations

Name	Plates [mm]	Shape	Nr.	Welds [mm]	Length [mm]	Bolts	Nr.
PP1	P18.0x205.8-253.2 (S 275)	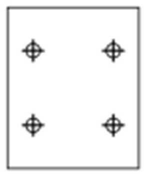	1	Double fillet: a = 8.5	1258.0	M20 8.8	4
	P18.0x205.8-253.2 (S 275)	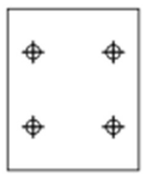	1				

Welds

Type	Material	Throat thickness [mm]	Leg size [mm]	Length [mm]
Double fillet	S 275	8.5	12.0	1258.0

Bolts

Name	Grip length [mm]	Count
M20 8.8	36	4

Drawing

PP1 - PP1a

P18.0x253-206 (S 355)

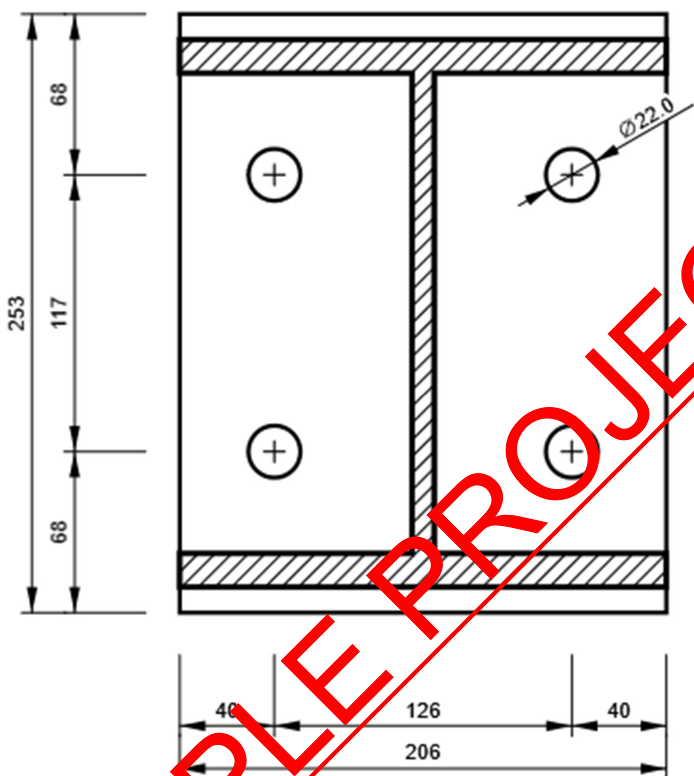

PP1 - PP1b

P18.0x253-206 (S 355)

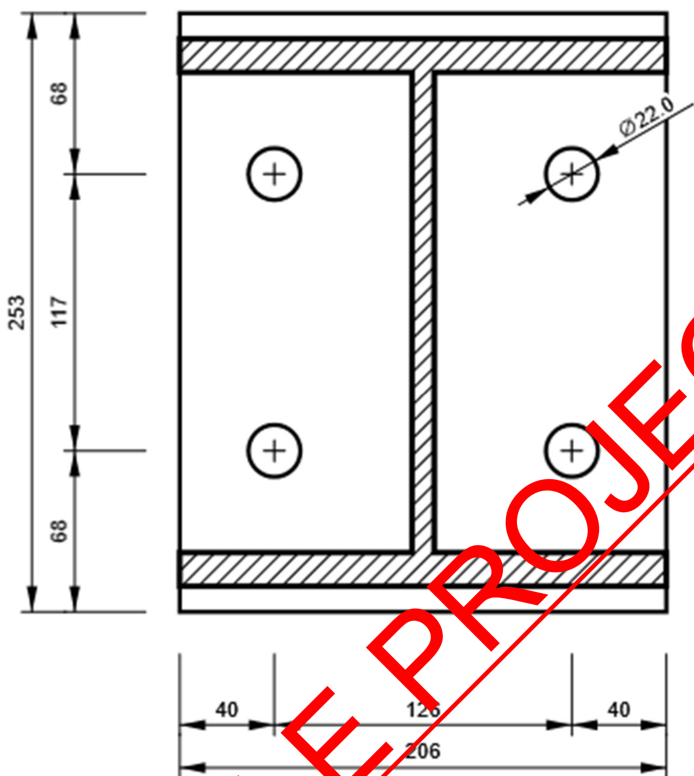

- **Connection-12**

Project data

Project name	
Project number	-
Author	
Description	Connection - 12
Date	
Design code	EN

Material

Steel	S 275,
Concrete	C25/30

Project item Connection - 12

Design

Name	Connection - 12
Description	
Analysis	Stress, strain/ loads in equilibrium

Beams and columns

Name	Cross-section	β – Direction [°]	γ - Pitch [°]	α - Rotation [°]	Offset ex [mm]	Offset ey [mm]	Offset ez [mm]	Forces in	X [mm]
M1	3 - UC 203 x 203 x 60	0.0	38.0	0.0	0	0	0	Bolts	0
M2	3 - UC 203 x 203 x 60	180.0	0.0	0.0	0	0	0	Bolts	160
M3	1 - UC 203 x 203 x 46	-90.0	0.0	0.0	0	-160	0	Bolts	59

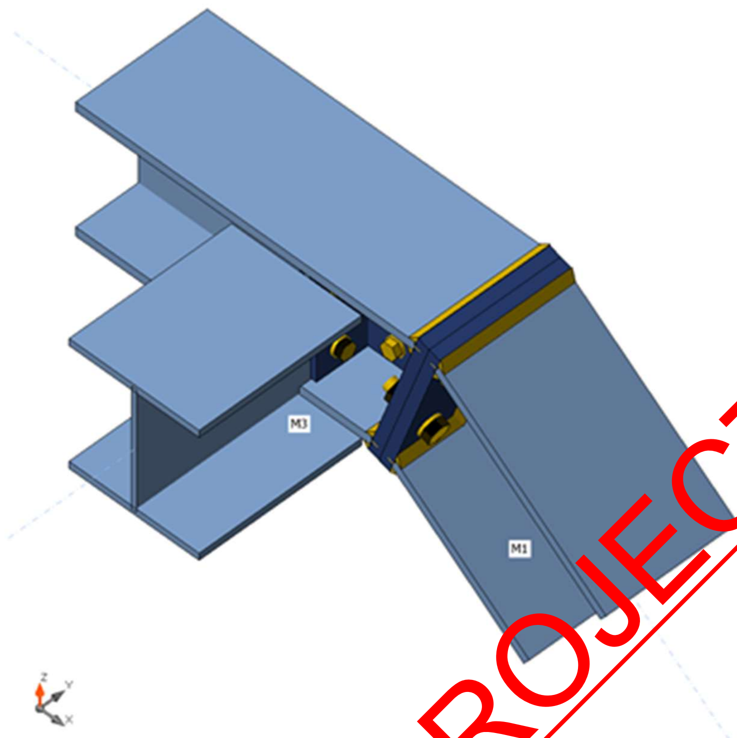
M3
M1

PEARL ENGINEERS, PLANNERS & PROJECT MANAGERS 02 TOWERFIELDS WESTERHAM ROAD BROMLEY, BR2 6HF Email: info@Pearlepp.co.uk Website: www. pearlepp.co.uk Tel no. 02035763199	**Project:** 68 GROVE PARK RD UK		**Sheet No./Rev.** 333
	Job Ref. 2024-06-	**Structural Engineer** **MM**	**Date** **11/06/2024**

PEARL ENGINEERS, PLANNERS & PROJECT MANAGERS 02 TOWERFIELDS WESTERHAM ROAD BROMLEY, BR2 6HF Email: info@Pearlepp.co.uk Website: www. pearlepp.co.uk Tel no. 02035763199	**Project:** 68 GROVE PARK RD UK		**Sheet No./Rev.** 334
	Job Ref. 2024-06-	**Structural Engineer** **MM**	**Date** **11/06/2024**

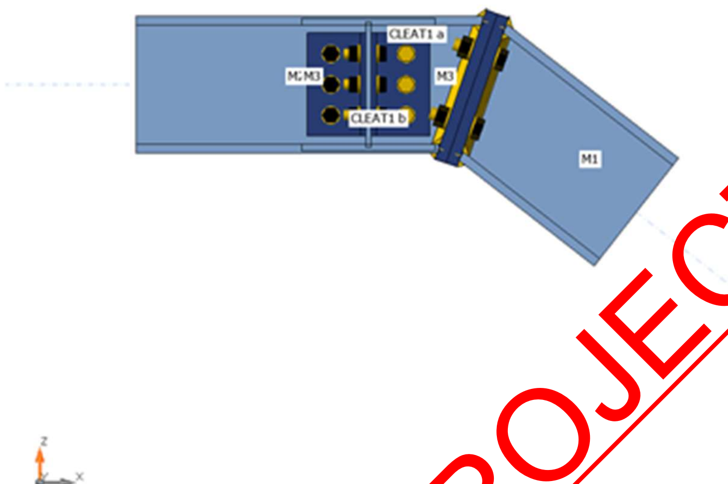

Cross-sections

Name	Material
3 - UC 203 x 203 x 60	S 275
1 - UC 203 x 203 x 46	S 355
9 - L90X9	S 355

Cross-sections

Name	Material	Drawing

02 TOWERFIELDS WESTERHAM ROAD BROMLEY, BR2 6HF Email: info@Pearlepp.co.uk Website: www. pearlepp.co.uk Tel no. 02035763199	**Project:** 68 GROVE PARK RD UK		**Sheet No./Rev.** 336
	Job Ref. 2024-06-	**Structural Engineer** **MM**	**Date** **11/06/2024**

3 - UC 203 x 203 x 60	S 275	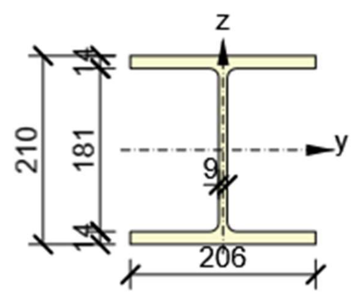
1 - UC 203 x 203 x 46	S 355	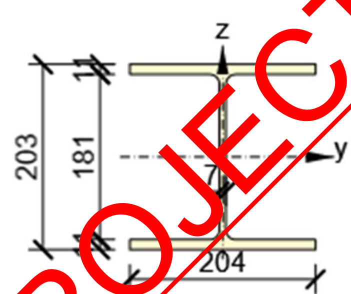
9 - L90X9	S 355	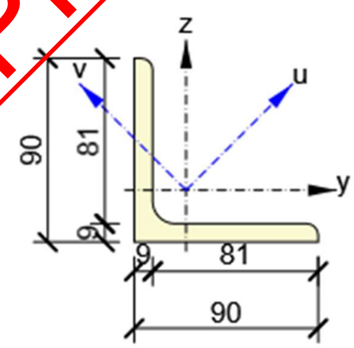

Bolts

Name	Bolt assembly	Diameter [mm]	fu [MPa]	Gross area [mm^2]
M20 8.8	M20 8.8	20	800.0	314
M16 8.8	M16 8.8	16	800.0	201

Load effects (forces in equilibrium)

Name	Member	N	Vy	Vz	Mx	My	Mz

		[kN]	[kN]	[kN]	[kNm]	[kNm]	[kNm]
LE1	M1	0.0	0.0	0.0	0.0	0.0	0.0
	M2	0.0	0.0	-20.0	0.0	20.0	0.0
	M3	0.0	0.0	-20.0	0.0	1.0	0.0

Check

Summary

Name	Value	Status
Analysis	100.0%	OK
Plates	0.0 < 5.0%	OK
Bolts	66.0 < 100%	OK
Welds	36.4 < 100%	OK
Buckling	58.83	

Plates

Name	Material	Thickness [mm]	Loads	σ_{Ed} [MPa]	ε_{Pl} [%]	σc_{Ed} [MPa]	Status
M1-bfl 1	S 275	14.2	LE1	118.8	0.0	0.0	OK
M1-tfl 1	S 275	14.2	LE1	220.8	0.0	0.0	OK
M1-w 1	S 275	9.4	LE1	126.5	0.0	0.0	OK
M2-bfl 1	S 275	14.2	LE1	146.9	0.0	0.0	OK
M2-tfl 1	S 275	14.2	LE1	166.2	0.0	0.0	OK
M2-w 1	S 275	9.4	LE1	183.4	0.0	69.2	OK
M3-bfl 1	S 355	11.0	LE1	12.8	0.0	0.0	OK
M3-tfl 1	S 355	11.0	LE1	12.8	0.0	0.0	OK
M3-w 1	S 355	7.2	LE1	100.5	0.0	18.4	OK
CLEAT1 a-bfl 1	S 355	9.0	LE1	173.7	0.0	66.0	OK
CLEAT1 a-w 1	S 355	9.0	LE1	184.7	0.0	66.0	OK
CLEAT1 b-bfl 1	S 355	9.0	LE1	157.1	0.0	69.2	OK
CLEAT1 b-w 1	S 355	9.0	LE1	165.0	0.0	69.2	OK
PP1a	S 355	18.0	LE1	316.2	0.0	25.8	OK
PP1b	S 355	18.0	LE1	326.8	0.0	25.8	OK
STIFF1	S 355	10.0	LE1	48.4	0.0	0.0	OK

Design data

Material	f_y [MPa]	ε_{lim} [%]
S 275	275.0	5.0
S 355	355.0	5.0

PEPP PEARL ENGINEERS, PLANNERS & PROJECT MANAGERS	**Project:** 68 GROVE PARK RD UK		**Sheet No./Rev.** 338
02 TOWERFIELDS WESTERHAM ROAD BROMLEY, BR2 6HF Email: info@Pearlepp.co.uk Website: www. pearlepp.co.uk Tel no. 02035763199	**Job Ref. 2024-06-**	**Structural Engineer** **MM**	**Date** **11/06/2024**

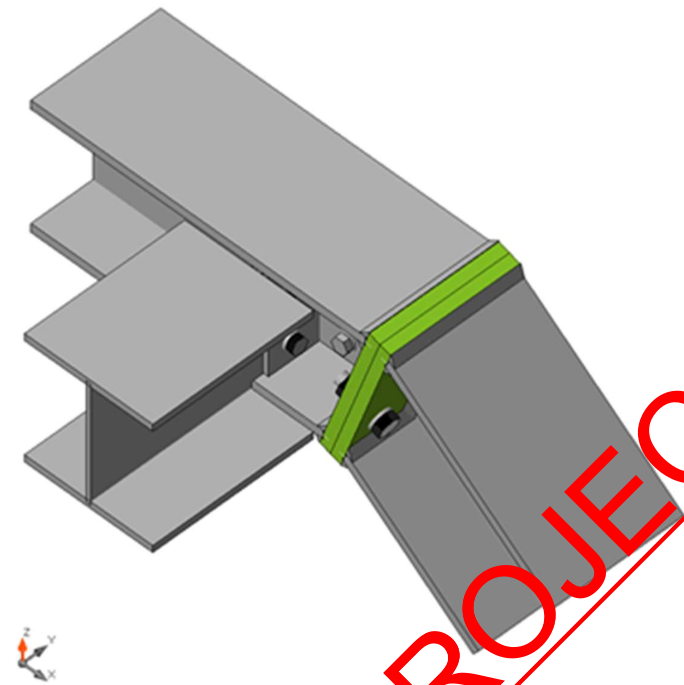

Overall check, LE1

PEPP PEARL ENGINEERS, PLANNERS & PROJECT MANAGERS 02 TOWERFIELDS WESTERHAM ROAD BROMLEY, BR2 6HF Email: info@Pearlepp.co.uk Website: www. pearlepp.co.uk Tel no. 02035763199	**Project:** 68 GROVE PARK RD UK		**Sheet No./Rev.** 339
	Job Ref. 2024-06-	**Structural Engineer** **MM**	**Date** **11/06/2024**

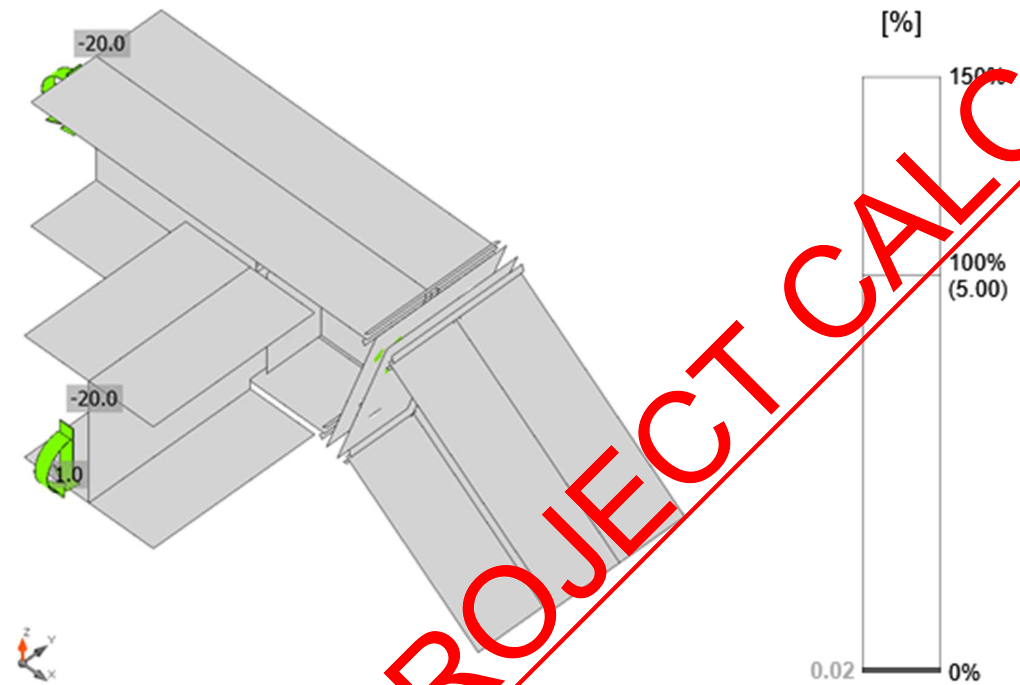

Strain check, LE1

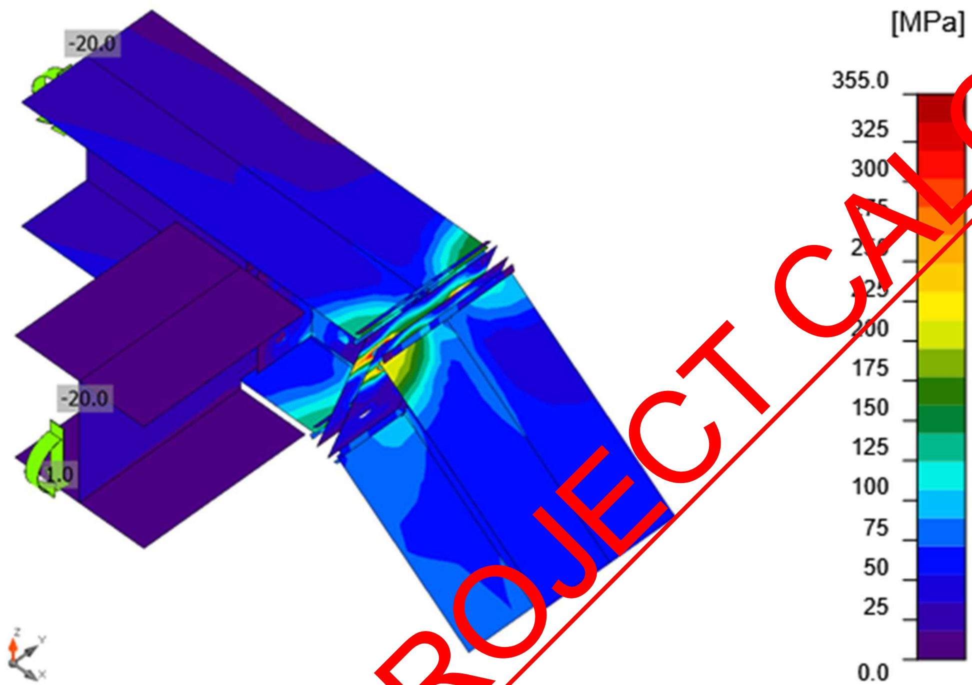

Equivalent stress, LE1

Bolts

	Name	Grade	Loads	$F_{t,Ed}$ [kN]	V [kN]	Ut_t [%]	$F_{b,Rd}$ [kN]	Ut_s [%]	Ut_{ts} [%]	Status
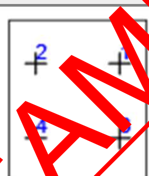	B1	M20 8.8 - 1	LE1	82.1	4.9	58.2	228.8	5.2	46.8	OK
	B2	M20 8.8 - 1	LE1	93.1	15.0	66.0	324.9	15.9	63.1	OK
	B3	M20 8.8 - 1	LE1	9.8	5.2	7.0	230.2	5.5	10.5	OK
	B4	M20 8.8 - 1	LE1	9.0	15.5	6.4	330.5	16.4	21.0	OK
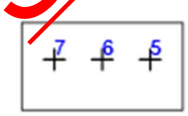	B5	M16 8.8 - 2	LE1	4.0	6.5	4.4	81.0	15.4	13.8	OK
	B6	M16 8.8 - 2	LE1	3.2	3.6	3.5	70.0	9.5	8.4	OK
	B7	M16 8.8 - 2	LE1	4.6	6.7	5.1	112.9	11.2	14.7	OK
	B8	M16 8.8 - 3	LE1	15.8	3.9	17.5	83.9	6.5	19.0	OK
	B9	M16 8.8 - 3	LE1	7.0	3.5	7.8	80.2	5.8	11.4	OK

02 TOWERFIELDS WESTERHAM ROAD
BROMLEY, BR2 6HF
Email: info@Pearlepp.co.uk
Website: www. pearlepp.co.uk
Tel no. 02035763199

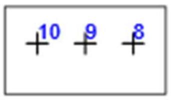	B10	M16 8.8 - 3	LE1	2.8	4.8	3.1	121.7	8.0	10.2	OK
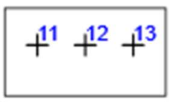	B11	M16 8.8 - 3	LE1	15.2	3.5	16.8	83.6	5.7	17.7	OK
	B12	M16 8.8 - 3	LE1	6.4	3.0	7.0	80.2	5.0	10.1	OK
	B13	M16 8.8 - 3	LE1	2.9	3.5	3.2	121.4	5.8	8.1	OK

Design data

Name	$F_{t,Rd}$ [kN]	$B_{p,Rd}$ [kN]	$F_{v,Rd}$ [kN]
M20 8.8 - 1	141.1	419.0	94.1
M16 8.8 - 2	90.4	166.3	60.3
M16 8.8 - 3	90.4	152.4	60.3

Detailed result for B2

Tension resistance check (EN 1993-1-8 tab 3.4)

$F_{t,Rd} = \frac{k_2 f_{ub} A_s}{\gamma_{M2}} =$ 141.1 kN $\geq$ $F_t =$ 93.1 kN

where:

$k_2 = 0.90$ – Factor

$f_{ub} = 800.0$ MPa – Ultimate tensile strength of the bolt

$A_s = 245$ mm^2 – Tensile stress area of the bolt

$\gamma_{M2} = 1.25$ – Safety factor

Punching resistance check (EN 1993-1-8 tab 3.4)

$B_{p,Rd} = \frac{0.6 \pi d_m t_p f_u}{\gamma_{M2}} =$ 419.0 kN $\geq$ $F_t =$ 93.1 kN

where:

$d_m = 32$ mm – The mean of the across points and across flats dimensions of the bolt head or the nut, whichever is smaller

$t_p = 18$ mm – Thickness

$f_u = 490.0$ MPa – Ultimate strength

$\gamma_{M2} = 1.25$ – Safety factor

Shear resistance check (EN 1993-1-8 tab 3.4)

$F_{v,Rd} = \frac{\beta_p \alpha_v f_{ub} A}{\gamma_{M2}} =$ 94.1 kN ≥ $V =$ 15.0 kN

where:

$\beta_p =$ 1.00 – Reducing factor

$\alpha_v =$ 0.60 – Reducing factor

$f_{ub} =$ 800.0 MPa – Ultimate tensile strength of the bolt

$A =$ 245 mm^2 – Tensile stress area of the bolt

$\gamma_{M2} =$ 1.25 – Safety factor

Bearing resistance check (EN 1993-1-8 tab 3.4)

$F_{b,Rd} = \frac{k_1 \alpha_b f_u d t}{\gamma_{M2}} =$ 324.9 kN ≥ $V =$ 15.0 kN

where:

$k_1 = \min(2.8\frac{e_2}{d_0} - 1.7, 1.4\frac{p_2}{d_0} - 1.7, 2.5) =$ 2.50 – Factor for edge distance and bolt spacing perpendicular to the direction of load transfer

$\alpha_b = \min(\frac{e_1}{3d_0}, \frac{p_1}{3d_0} - \frac{1}{4}, \frac{f_{ub}}{f_u}, 1) =$ 0.92 – Factor for end distance and bolt spacing in direction of load transfer

$e_2 =$ 40 mm – Distance to the plate edge perpendicular to the shear force

$p_2 =$ ∞ mm – Distance between bolts perpendicular to the shear force

$d_0 =$ 22 mm – Bolt hole diameter

$e_1 =$ 61 mm – Distance to the plate edge in the direction of the shear force

$p_1 =$ 112 mm – Distance between bolts in the direction of the shear force

$f_{ub} =$ 800.0 MPa – Ultimate tensile strength of the bolt

$f_u =$ 490.0 MPa – Ultimate strength

$d =$ 20 mm – Nominal diameter of the fastener

$t =$ 18 mm – Thickness of the plate

$\gamma_{M2} =$ 1.25 – Safety factor

Interaction of tension and shear (EN 1993-1-8 tab 3.4)

$U_{tts} = \frac{F_{v,Ed}}{F_{v,Rd}} + \frac{F_{t,Ed}}{1.4F_{t,Rd}} =$ 63.1 %

Utilization in tension

$U_{tt} = \frac{F_{t,Ed}}{\min(F_{t,Rd}; B_{p,Rd})} =$ 66.0 %

Utilization in shear

$U_{ts} = \frac{V_{Ed}}{\min(F_{v,Rd}; F_{b,Rd})} =$ 15.9 %

PEPP PEARL ENGINEERS, PLANNERS & PROJECT MANAGERS 02 TOWERFIELDS WESTERHAM ROAD BROMLEY, BR2 6HF Email: info@Pearlepp.co.uk Website: www. pearlepp.co.uk Tel no. 02035763199	**Project:** 68 GROVE PARK RD UK		**Sheet No./Rev.** 343
	Job Ref. 2024-06-	**Structural Engineer** **MM**	**Date 11/06/2024**

Welds (Plastic redistribution)

Item	Edge	Throat th. [mm]	Length [mm]	Loads	$\sigma_{w,Ed}$ [MPa]	ε_{Pl} [%]	$\sigma_\perp$ [MPa]	$\tau_{\|\|}$ [MPa]	$\tau_\perp$ [MPa]	Ut [%]	Ut_c [%]	Status
PP1a	M1-bfl 1	◢8.5◣	206	LE1	80.5	0.0	-44.7	-2.1	-38.6	18.5	12.0	OK
		◢8.5◣	206	LE1	135.5	0.0	-66.9	-11.6	67.0	31.1	21.8	OK
PP1a	M1-tfl 1	◢8.5◣	206	LE1	98.7	0.0	-8.0	56.2	-[illegible].8	2[illegible].7	12.9	OK
		◢8.5◣	206	LE1	158.6	0.0	61.3	77.2	-34.[illegible]	36.4	22.0	OK
PP1a	M1-w 1	◢8.5◣	207	LE1	93.0	0.0	41.8	-22.2	42.5	21.4	10.7	OK
		◢8.5◣	207	LE1	95.9	0.0	48.0	-7.5	-47.3	22.0	12.6	OK
PP1b	M2-bfl 1	◢8.5◣	206	LE1	58.0	0.0	-20.0	17.1	-26.4	13.3	8.8	OK
		◢8.5◣	206	LE1	13[illegible].9	0.0	-74.7	27.7	56.4	30.3	20.7	OK
PP1b	M2-tfl 1	◢8.5◣	206	LE1	76.7	0.0	-3.5	-44.0	-4.7	17.6	12.3	OK
		◢8.5◣	206	LE1	135.8	0.0	29.2	74.2	-18.9	31.2	21.1	OK
PP1b	M2-w 1	◢8.5◣	207	LE1	116.7	0.0	-27.8	-57.0	-32.2	26.8	15.5	OK
		◢8.5◣	207	LE1	96.3	0.0	43.7	10.9	-48.3	22.1	11.2	OK
M2-bfl 1	STIFF 1	◢6.5◣	98	LE1	16.4	0.0	-8.9	7.2	3.5	3.8	2.6	OK
		◢6.5◣	98	LE1	24.6	0.0	3.5	-13.2	-4.9	5.7	3.5	OK
M2-w 1	STIFF 1	◢6.5◣	181	LE1	50.9	0.0	-14.7	-12.1	-25.4	11.7	5.3	OK
		◢6.5◣	181	LE1	61.2	0.0	-14.7	-31.3	13.9	14.0	5.6	OK
M2-tfl 1	STIFF 1	◢6.5◣	98	LE1	19.9	0.0	-13.6	-6.6	-5.2	4.6	3.8	OK
		◢6.5◣	98	LE1	23.4	0.0	-3.6	-13.4	0.7	5.4	3.9	OK

Design data

	β_w [-]	$\sigma_{w,Rd}$ [MPa]	0.9 σ [MPa]
S 275	0.90	435.6	352.8

Detailed result for PP1a M1-tfl 1

Weld resistance check (EN 1993-1-8 4.5.3.2)

$\sigma_{w,Rd} = f_u/(\beta_w \gamma_{M2}) =$ 435.6 MPa $\geq$ $\sigma_{w,Ed} = [\sigma_\perp^2 + 3(\tau_\perp^2 + \tau_\parallel^2)]^{0.5} =$ 158.6 MPa

$\sigma_{\perp,Rd} = 0.9 f_u/\gamma_{M2} =$ 352.8 MPa $\geq$ $|\sigma_\perp| =$ 61.3 MPa

where:

$f_u =$ 490.0 MPa – Ultimate strength

$\beta_w =$ 0.90 – appropriate correlation factor taken from Table 4.1

$\gamma_{M2} =$ 1.25 – Safety factor

Stress utilization

$U_t = \max(\frac{\sigma_{w,Ed}}{\sigma_{w,Rd}}; \frac{|\sigma_\perp|}{\sigma_{\perp,Rd}}) =$ 36.4 %

Buckling

Loads	Shape	Factor [-]
LE1	1	58.83
	2	81.64
	3	87.38
	4	94.36
	5	94.64
	6	104.26

Bill of material

Manufacturing operations

Name	Plates [mm]	Shape	Nr.	Welds [mm]	Length [mm]	Bolts	Nr.
CUT1							
PP1	P18.0x205.8-241.7 (S 275)	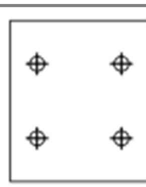	1	Double fillet: a = 8.5	1236.5	M20 8.8	4

	P18.0x205.8-241.7 (S 275)	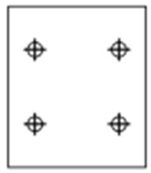	1				
STIFF1	P10.0x98.2-181.2 (S 275)		1	Double fillet: a = 6.5	377.6		

Welds

Type	Material	Throat thickness [mm]	Leg size [mm]	Length [mm]
Double fillet	S 275	8.5	12.0	1236.5
Double fillet	S 275	6.5	9.2	377.6

Bolts

Name	Grip length [mm]	Count
M20 8.8	36	4
M16 8.8	25	3
M16 8.8	18	6

Drawing

PP1 - PP1a

P18.0x242-206 (S 275)

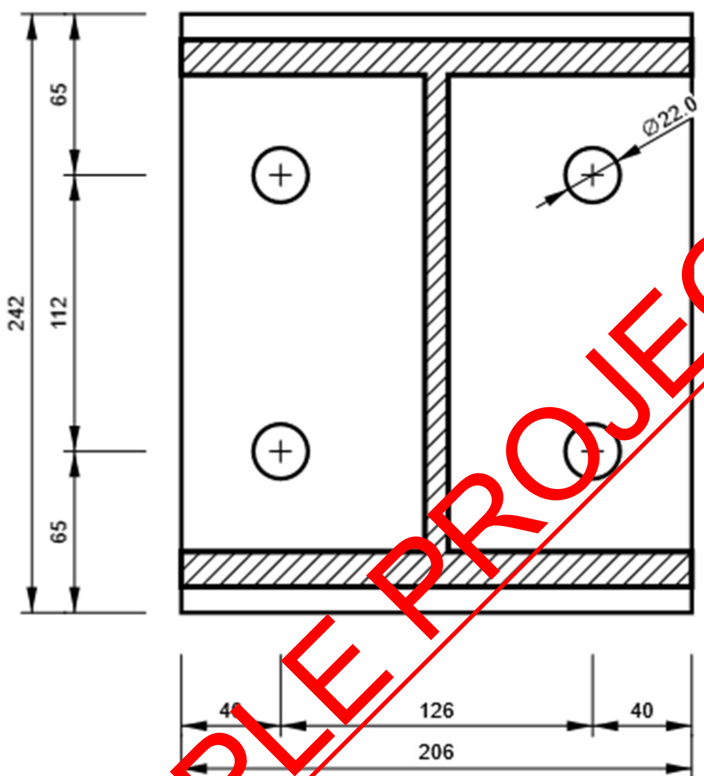

02 TOWERFIELDS WESTERHAM ROAD
BROMLEY, BR2 6HF
Email: info@Pearlepp.co.uk
Website: www. pearlepp.co.uk
Tel no. 02035763199

PP1 - PP1b

P18.0x242-206 (S 275)

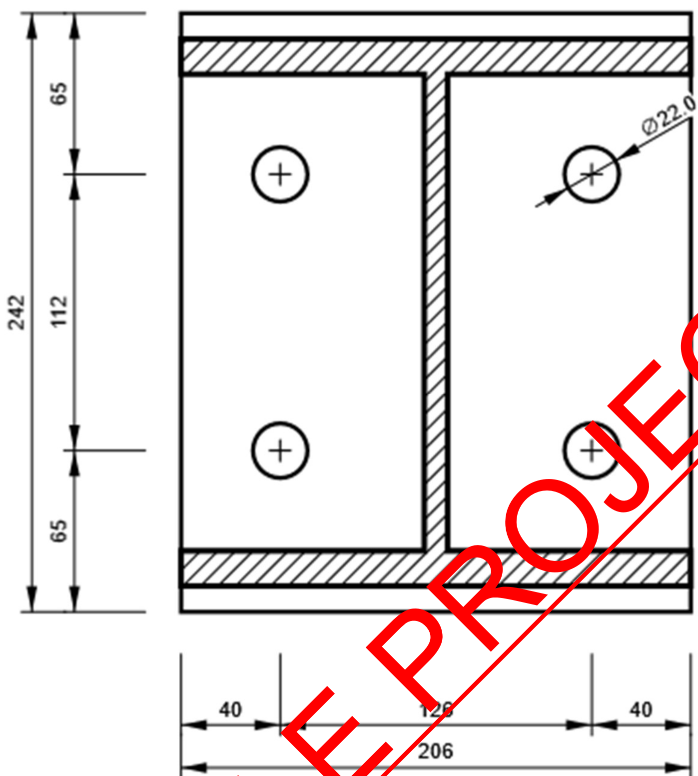

STIFF1

P10.0x181-98 (S 275)

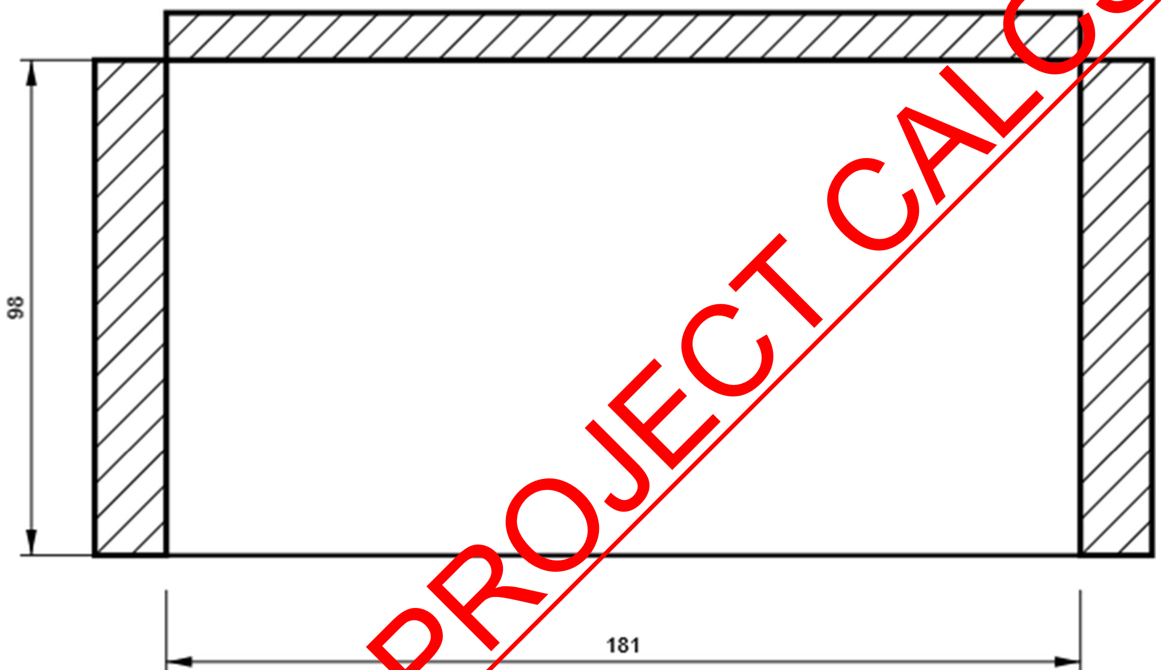

M2, UC 203 x 203 x 60 - Web 1:

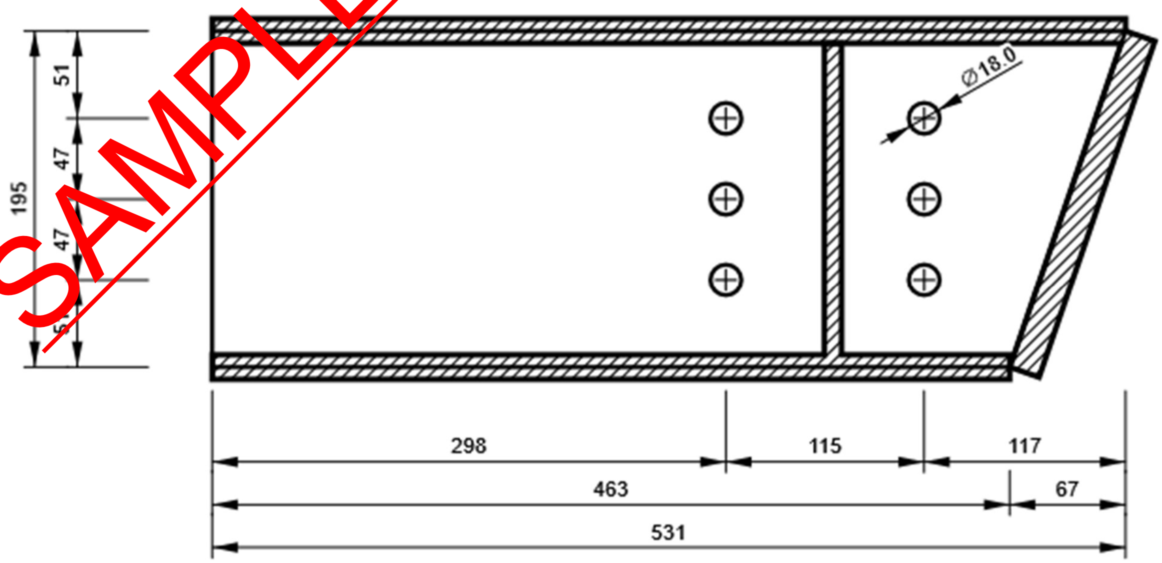

PEPP PEARL ENGINEERS, PLANNERS & PROJECT MANAGERS 02 TOWERFIELDS WESTERHAM ROAD BROMLEY, BR2 6HF Email: info@Pearlepp.co.uk Website: www. pearlepp.co.uk Tel no. 02035763199	**Project:** 68 GROVE PARK RD UK		**Sheet No./Rev.** 349
	Job Ref. 2024-06-	**Structural Engineer** **MM**	**Date** **11/06/2024**

M3, UC 203 x 203 x 46 - Web 1:

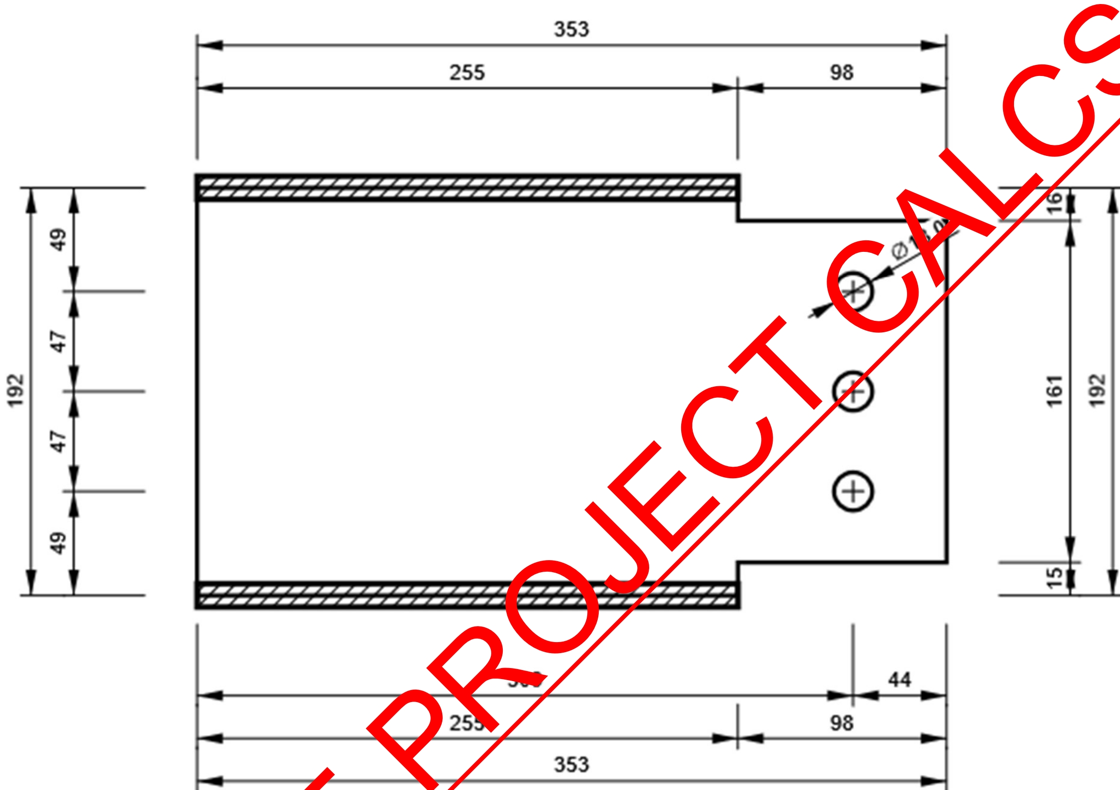

CLEAT1 a, L90X9 - Bottom flange 1:

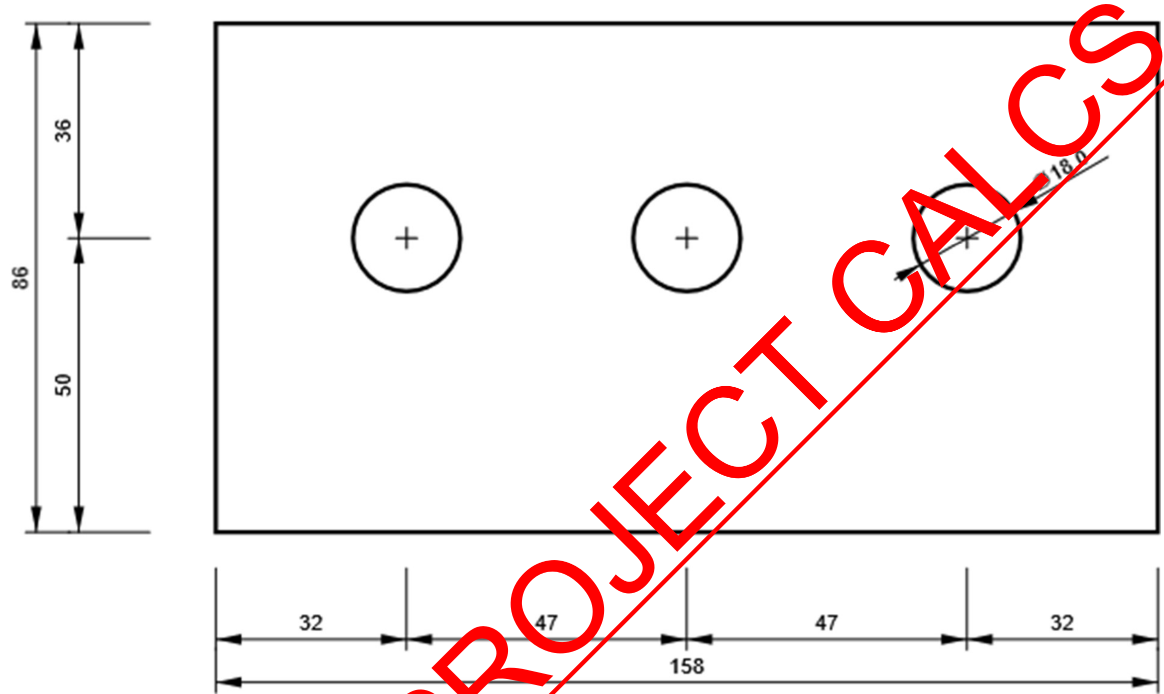

CLEAT1 a, L90X9 - Web 1:

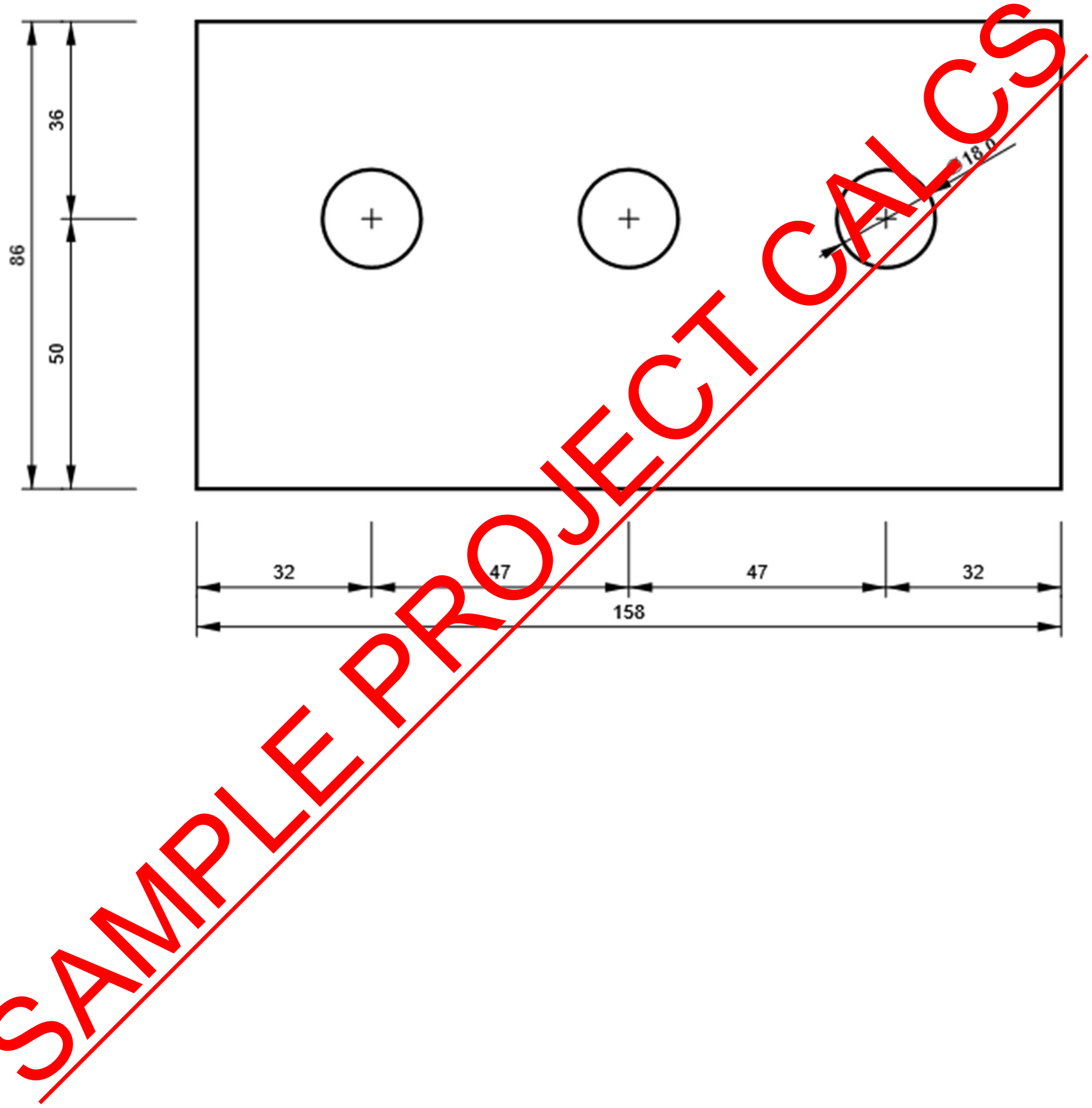

CLEAT1 b, L90X9 - Bottom flange 1:

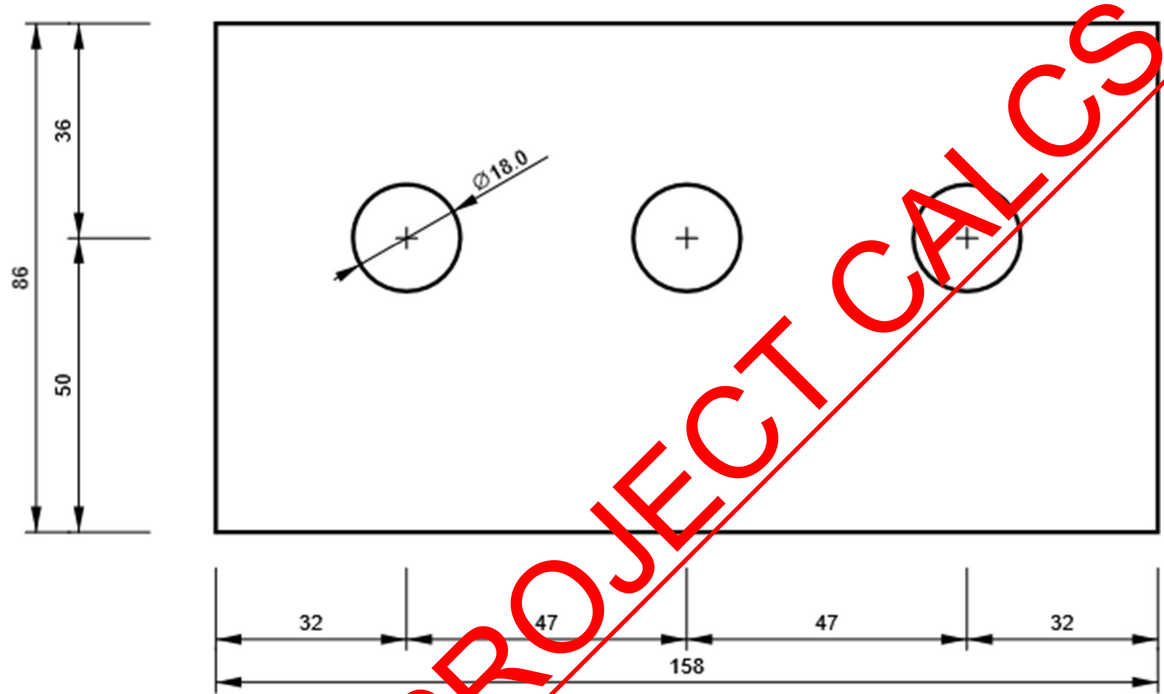

CLEAT1 b, L90X9 - Web 1:

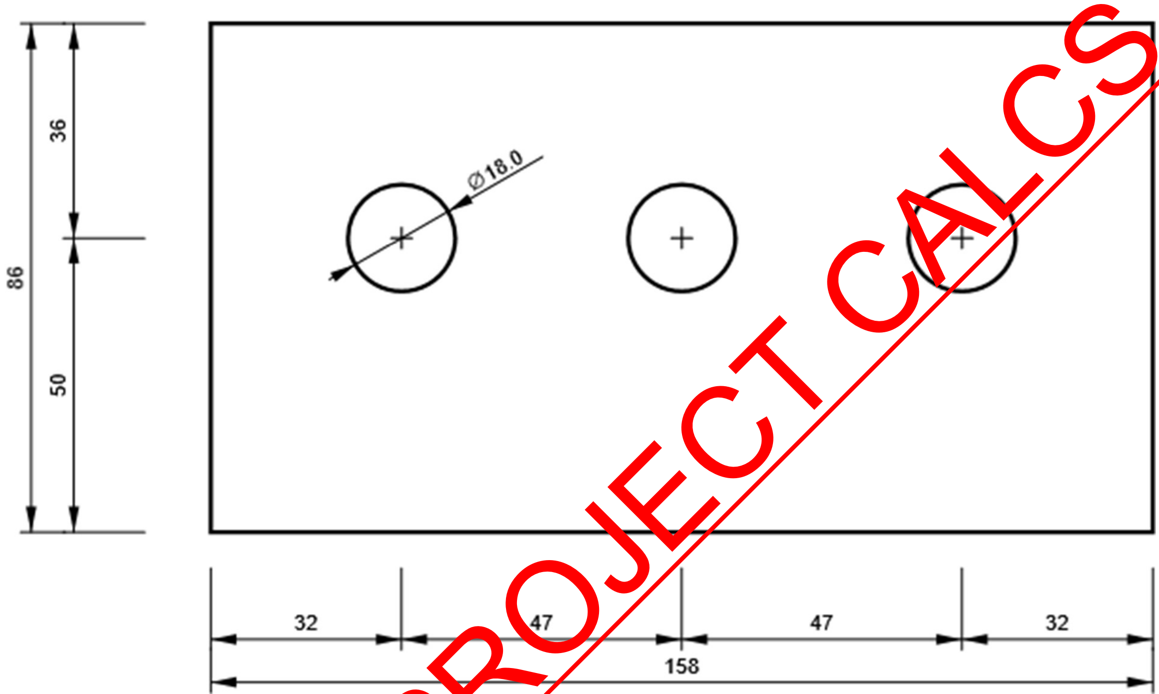

- **Connection-13**

Project data

Project name	
Project number	-
Author	
Description	CONNECTION - 13
Date	
Design code	EN

Material

Steel	S 275
Concrete	C25/30

Project item Connection - 13

Design

Name	Connection - 13
Description	
Analysis	Stress, strain/ simplified loading

Beams and columns

Name	Cross-section	β – Direction [°]	γ - Pitch [°]	α - Rotation [°]	Offset ex [mm]	Offset ey [mm]	Offset ez [mm]	Forces in	X [mm]
M1	2 - UC 203 x 203 x 46	-90.0	0.0	0.0	0	0	0	Bolts	58
M2	1 - UC 203 x 203 x 60	0.0	0.0	0.0	0	0	0	Bolts	0

PEPP PEARL ENGINEERS, PLANNERS & PROJECT MANAGERS 02 TOWERFIELDS WESTERHAM ROAD BROMLEY, BR2 6HF Email: info@Pearlepp.co.uk Website: www. pearlepp.co.uk Tel no. 02035763199	**Project:** 68 GROVE PARK RD UK		**Sheet No./Rev.** 355
	Job Ref. 2024-06-	**Structural Engineer** **MM**	**Date** **11/06/2024**

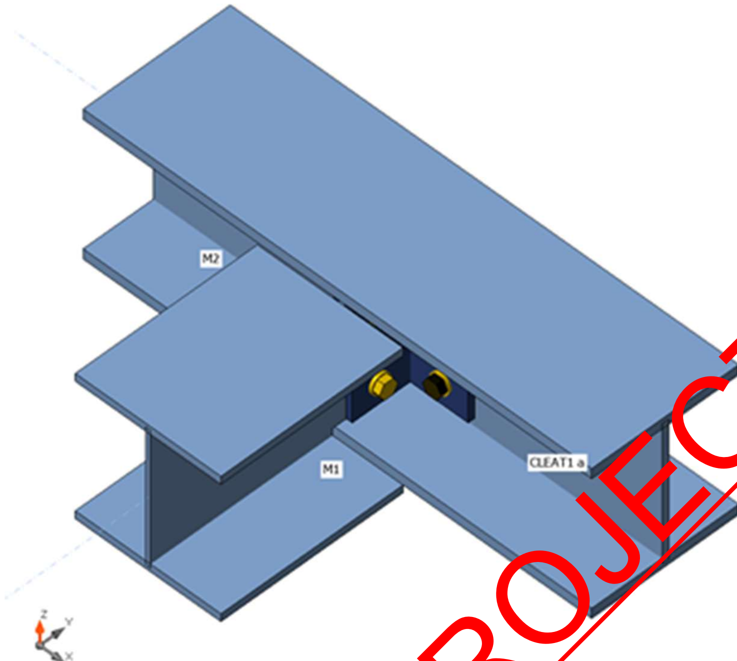

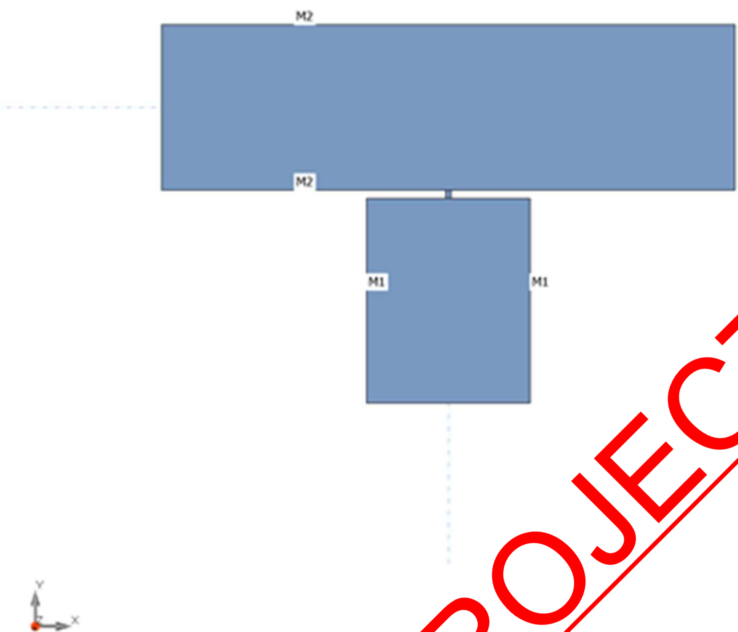

M2
M2
M1
M1
Y
X

02 TOWERFIELDS WESTERHAM ROAD BROMLEY, BR2 6HF Email: info@Pearlepp.co.uk Website: www. pearlepp.co.uk Tel no. 02035763199	**Project:** 68 GROVE PARK RD UK		**Sheet No./Rev.** 357
	Job Ref. 2024-06-	**Structural Engineer** **MM**	**Date** **11/06/2024**

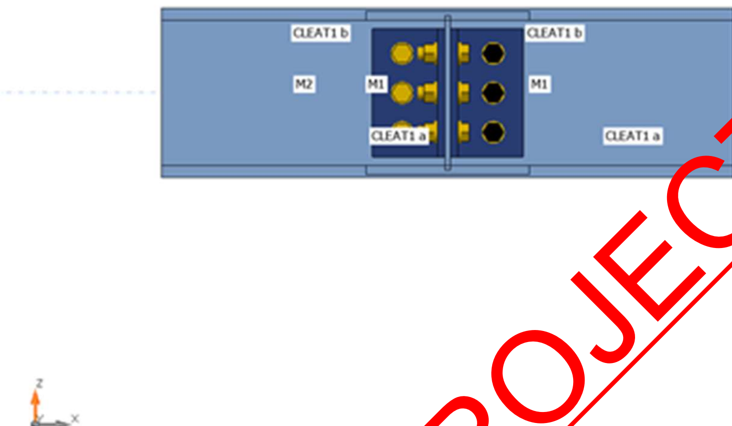

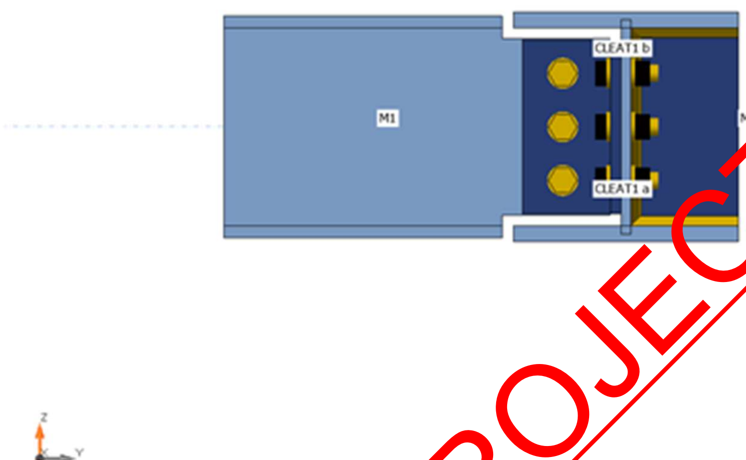

Cross-sections

Name	Material
2 - UC 203 x 203 x 46	S 355
1 - UC 203 x 203 x 60	S 355
3 - L90X9	S 355

Cross-sections

Name	Material	Drawing

PEPP PEARL ENGINEERS, PLANNERS & PROJECT MANAGERS 02 TOWERFIELDS WESTERHAM ROAD BROMLEY, BR2 6HF Email: info@Pearlepp.co.uk Website: www. pearlepp.co.uk Tel no. 02035763199	**Project:** 68 GROVE PARK RD UK	**Sheet No./Rev.** 359
	Job Ref. 2024-06- | **Structural Engineer** **MM**	**Date** **11/06/2024**

2 - UC 203 x 203 x 46	S 355	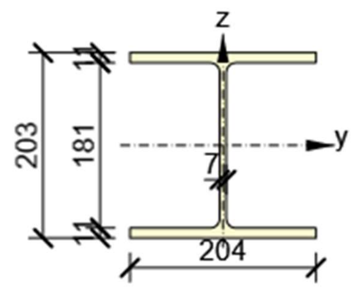
1 - UC 203 x 203 x 60	S 355	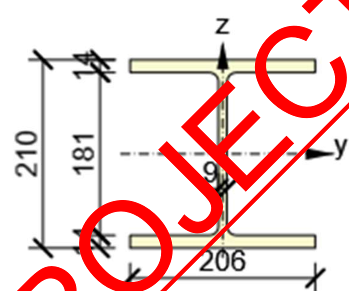
3 - L90X9	S 355	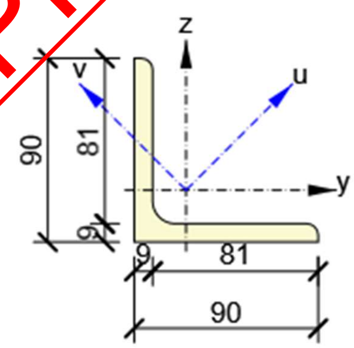

Bolts

Name	Bolt assembly	Diameter [mm]	fu [MPa]	Gross area [mm^2]
M16 8.8	M16 8.8	16	800.0	201

Load effects (equilibrium not required)

Name	Member	N [kN]	Vy [kN]	Vz [kN]	Mx [kNm]	My [kNm]	Mz [kNm]

LE1	M1	0.0	0.0	-50.0	0.0	0.5	0.0

Check

Summary

Name	Value	Status
Analysis	100.0%	OK
Plates	0.0 < 5.0%	OK
Bolts	32.9 < 100%	OK
Welds	17.1 < 100%	OK
Buckling	60.01	

Plates

Name	Thickness [mm]	Loads	σ_{Ed} [MPa]	ε_{Pl} [%]	$\sigma_{c,Ed}$ [MPa]	Status
M1-bfl 1	11.0	LE1	36.4	0.0	0.0	OK
M1-tfl 1	11.0	LE1	36.4	0.0	0.0	OK
M1-w 1	7.2	LE1	163.0	0.0	46.4	OK
M2-bfl 1	14.2	LE1	65.2	0.0	0.0	OK
M2-tfl 1	14.2	LE1	71.4	0.0	0.0	OK
M2-w 1	9.4	LE1	100.1	0.0	113.6	OK
CLEAT1 a-bfl 1	9.0	LE1	275.7	0.0	113.6	OK
CLEAT1 a-w 1	9.0	LE1	265.2	0.0	113.6	OK
CLEAT1 b-bfl 1	9.0	LE1	275.8	0.0	113.2	OK
CLEAT1 b-w 1	9.0	LE1	265.3	0.0	113.2	OK
STIFF1	10.0	LE1	49.2	0.0	0.0	OK

Design data

Material	f_y [MPa]	ε_{lim} [%]
S 355	355.0	5.0

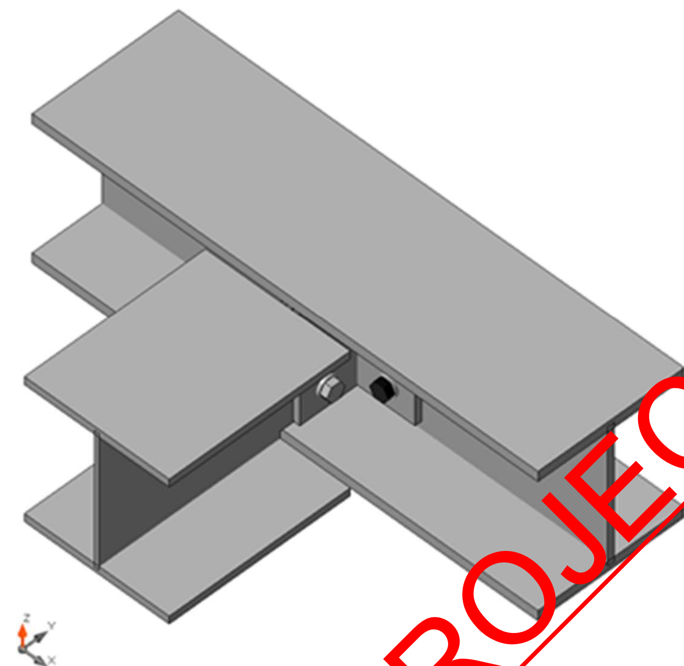

Overall check, LE1

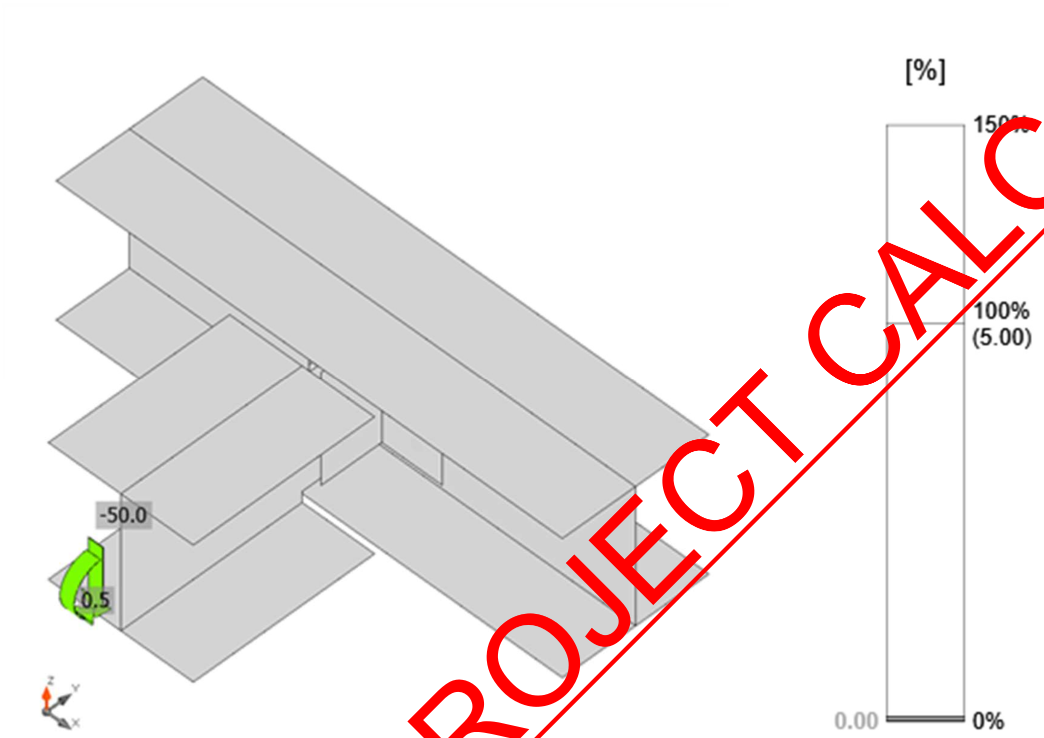

Strain check, LE1

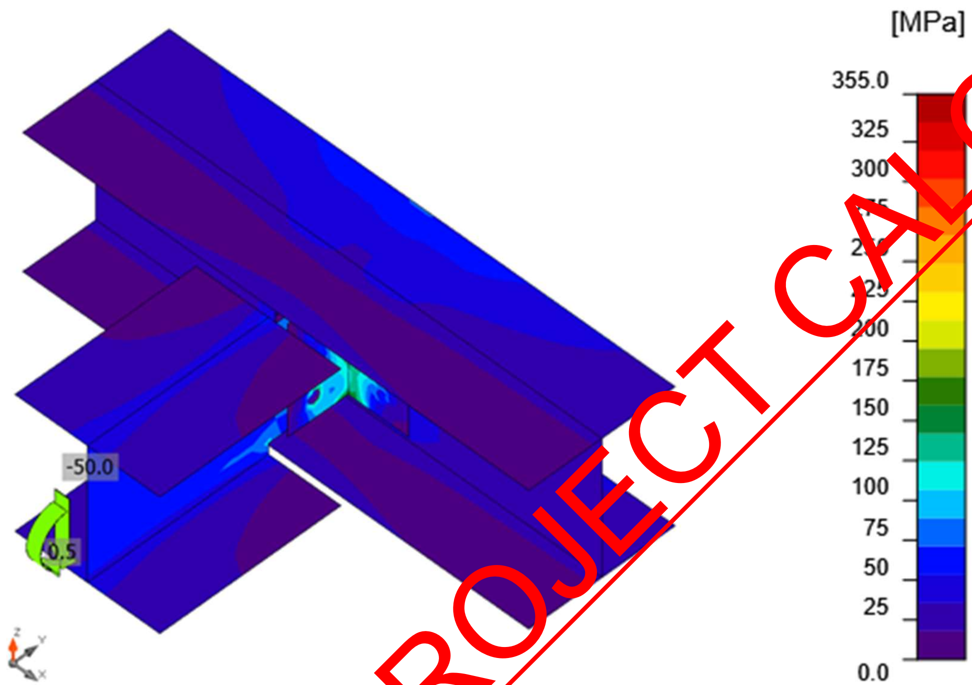

Equivalent stress, LE1

Bolts

	Name	Loads	$F_{t,Ed}$ [kN]	V [kN]	Ut_t [%]	$F_{b,Rd}$ [kN]	Ut_s [%]	Ut_{ts} [%]	Status
	B1	LE1	9.0	8.8	10.0	74.2	23.7	21.7	OK
	B2	LE1	5.6	8.4	6.2	74.2	22.5	18.3	OK
	B3	LE1	6.4	8.6	7.0	66.1	26.1	19.3	OK
	B4	LE1	4.5	9.7	5.0	133.1	16.2	19.7	OK
	B5	LE1	10.4	8.3	11.4	92.8	13.8	22.0	OK
	B6	LE1	22.9	8.9	25.3	79.7	14.8	32.9	OK
	B7	LE1	4.5	9.7	5.0	133.1	16.2	19.7	OK
	B8	LE1	10.3	8.3	11.4	92.8	13.8	22.0	OK

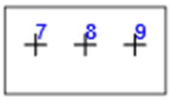	B9	LE1	22.9	8.9	25.3	79.7	14.8	32.9	OK

Design data

Name	$F_{t,Rd}$ [kN]	$B_{p,Rd}$ [kN]	$F_{v,Rd}$ [kN]
M16 8.8 - 1	90.4	166.3	60.3

Detailed result for B6

Tension resistance check (EN 1993-1-8 tab 3.4)

$F_{t,Rd} = \frac{k_2 f_{ub} A_s}{\gamma_{M2}} =$ 90.4 kN ≥ $F_t =$ 22.9 kN

where:

$k_2 = 0.90$ – Factor

$f_{ub} = 800.0$ MPa – Ultimate tensile strength of the bolt

$A_s = 157$ mm^2 – Tensile stress area of the bolt

$\gamma_{M2} = 1.25$ – Safety factor

Punching resistance check (EN 1993-1-8 tab 3.4)

$B_{p,Rd} = \frac{0.6 \pi d_m t_p f_u}{\gamma_{M2}} =$ 166.3 kN ≥ $F_t =$ 22.9 kN

where:

$d_m = 25$ mm – The mean of the across points and across flats dimensions of the bolt head or the nut, whichever is smaller

$t_p = 9$ mm – Thickness

$f_u = 490.0$ MPa – Ultimate strength

$\gamma_{M2} = 1.25$ – Safety factor

Shear resistance check (EN 1993-1-8 tab 3.4)

$F_{v,Rd} = \frac{\beta_p \alpha_v f_{ub} A}{\gamma_{M2}} =$ 60.3 kN ≥ $V =$ 8.9 kN

where:

$\beta_p = 1.00$ – Reducing factor

$\alpha_v = 0.60$ – Reducing factor

$f_{ub} = 800.0$ MPa – Ultimate tensile strength of the bolt

$A = 157$ mm^2 – Tensile stress area of the bolt

γ_{M2} = 1.25 – Safety factor

Bearing resistance check (EN 1993-1-8 tab 3.4)

$F_{b,Rd} = \frac{k_1 \alpha_b f_u d t}{\gamma_{M2}} =$ 79.7 kN ≥ $V =$ 8.9 kN

where:

$k_1 = \min(2.8\frac{e_2}{d_0} - 1.7, 1.4\frac{p_2}{d_0} - 1.7, 2.5) =$ 2.50 – Factor for edge distance and bolt spacing perpendicular to the direction of load transfer

$\alpha_b = \min(\frac{e_1}{3d_0}, \frac{p_1}{3d_0} - \frac{1}{4}, \frac{f_{ub}}{f_u}, 1) =$ 0.56 – Factor for end distance and bolt spacing in direction of load transfer

e_2 = 31 mm – Distance to the plate edge perpendicular to the shear force

p_2 = ∞ mm – Distance between bolts perpendicular to the shear force

d_0 = 18 mm – Bolt hole diameter

e_1 = 31 mm – Distance to the plate edge in the direction of the shear force

p_1 = ∞ mm – Distance between bolts in the direction of the shear force

f_{ub} = 800.0 MPa – Ultimate tensile strength of the bolt

f_u = 490.0 MPa – Ultimate strength

d = 16 mm – Nominal diameter of the fastener

t = 9 mm – Thickness of the plate

γ_{M2} = 1.25 – Safety factor

Interaction of tension and shear (EN 1993-1-8 tab 3.4)

$U_{tts} = \frac{F_{v,Ed}}{F_{v,Rd}} + \frac{F_{t,Ed}}{1.4 F_{t,Rd}} =$ 32.9 %

Utilization in tension

$U_{tt} = \frac{F_{t,Ed}}{\min(F_{t,Rd}; B_{p,Rd})} =$ 25.3 %

Utilization in shear

$U_{ts} = \frac{V_{Ed}}{\min(F_{v,Rd}; F_{b,Rd})} =$ 14.8 %

Welds (Plastic redistribution)

Item	Edge	Throat th. [mm]	Length [mm]	Loads	$\sigma_{w,Ed}$ [MPa]	ε_{Pl} [%]	$\sigma_\perp$ [MPa]	$\tau_\parallel$ [MPa]	$\tau_\perp$ [MPa]	Ut [%]	Ut_c [%]	Status
M2-bfl 1	STIFF 1	◢6.5 ◣	98	LE1	25.7	0.0	-7.1	12.3	-7.2	5.9	3.3	OK

		◢6.5 ◣	98	LE1	26.1	0.0	-7.2	-12.7	7.1	6.0	3.3	OK
M2-w 1	STIFF 1	◢6.5 ◣	181	LE1	74.1	0.0	-33.5	-18.2	-33.6	17.0	6.9	OK
		◢6.5 ◣	181	LE1	74.7	0.0	-34.0	17.7	34.0	17.1	6.8	OK
M2-tfl 1	STIFF 1	◢6.5 ◣	98	LE1	18.3	0.0	-2.7	10.1	-2.6	4.2	3.2	OK
		◢6.5 ◣	98	LE1	18.3	0.0	-2.6	-10.1	2.6	4.2	3.2	OK

Design data

	β_w [-]	$\sigma_{w,Rd}$ [MPa]	0.9 σ [MPa]
S 355	0.90	435.6	352.8

Detailed result for M2-w 1 STIFF1

Weld resistance check (EN 1993-1-8 4.5.3.2)

$\sigma_{w,Rd} = f_u/(\beta_w \gamma_{M2}) =$ 435.6 MPa ≥ $\sigma_{w,Ed} = [\sigma_\perp^2 + 3(\tau_\perp^2 + \tau_\parallel^2)]^{0.5} =$ 74.7 MPa

$\sigma_{\perp,Rd} = 0.9 f_u/\gamma_{M2} =$ 352.8 MPa ≥ $|\sigma_\perp| =$ 34.0 MPa

where:

$f_u =$ 490.0 MPa – Ultimate strength

$\beta_w =$ 0.90 – appropriate correlation factor taken from Table 4.1

$\gamma_{M2} =$ 1.25 – Safety factor

Stress utilization

$U_t = \max(\frac{\sigma_{w,Ed}}{\sigma_{w,Rd}}; \frac{|\sigma_\perp|}{\sigma_{\perp,Rd}}) =$ 17.1 %

Buckling

Loads	Shape	Factor [-]
LE1	1	60.01
	2	65.71
	3	82.30
	4	102.67
	5	120.22
	6	131.77

Bill of material

Manufacturing operations

Name	Plates [mm]	Shape	Nr.	Welds [mm]	Length [mm]	Bolts	Nr.
CUT1							
STIFF1	P10.0x98.2-181.2 (S 355)		1	Double fillet: a = 6.5	377.6		

Welds

Type	Material	Throat thickness [mm]	Leg size [mm]	Length [mm]
Double fillet	S 355	6.5	9.2	377.6

Bolts

Name	Grip length [mm]	Count
M16 8.8	25	3
M16 8.8	18	6

PEPP
PEARL ENGINEERS, PLANNERS & PROJECT MANAGERS
02 TOWERFIELDS WESTERHAM ROAD
BROMLEY, BR2 6HF
Email: info@Pearlepp.co.uk
Website: www. pearlepp.co.uk
Tel no. 02035763199

Project: 68 GROVE PARK RD UK		**Sheet No./Rev.** 368
Job Ref. 2024-06-	**Structural Engineer** **MM**	**Date** **11/06/2024**

Drawing

STIFF1

P10.0x181-98 (S 355)

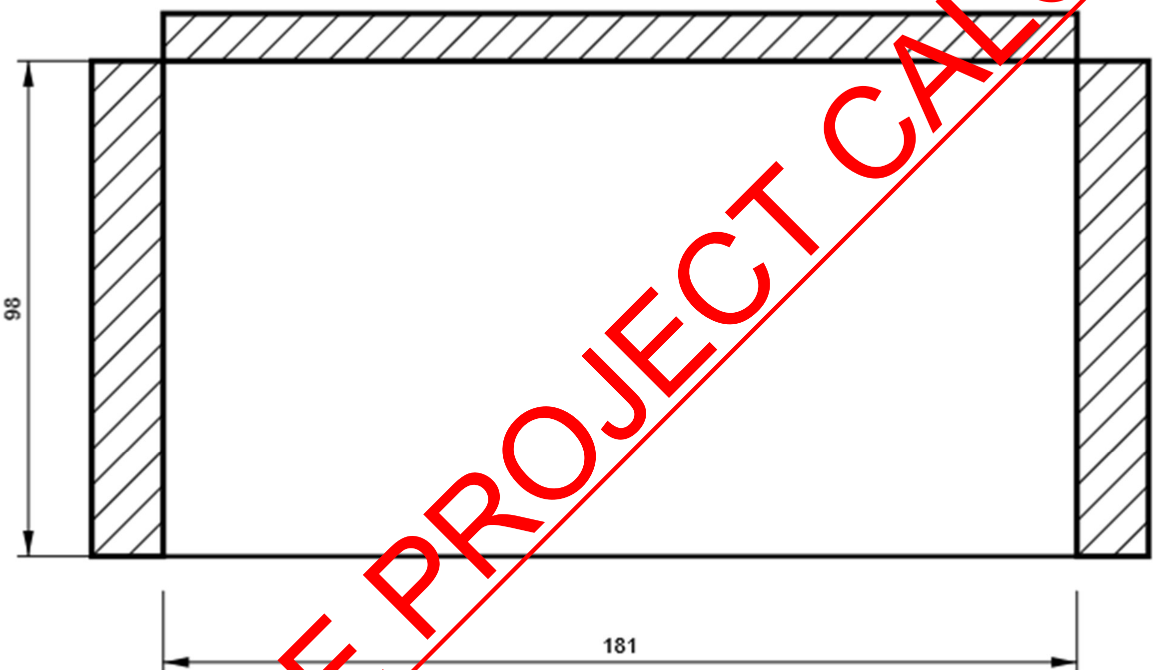

M1, UC 203 x 203 x 46 - Web 1:

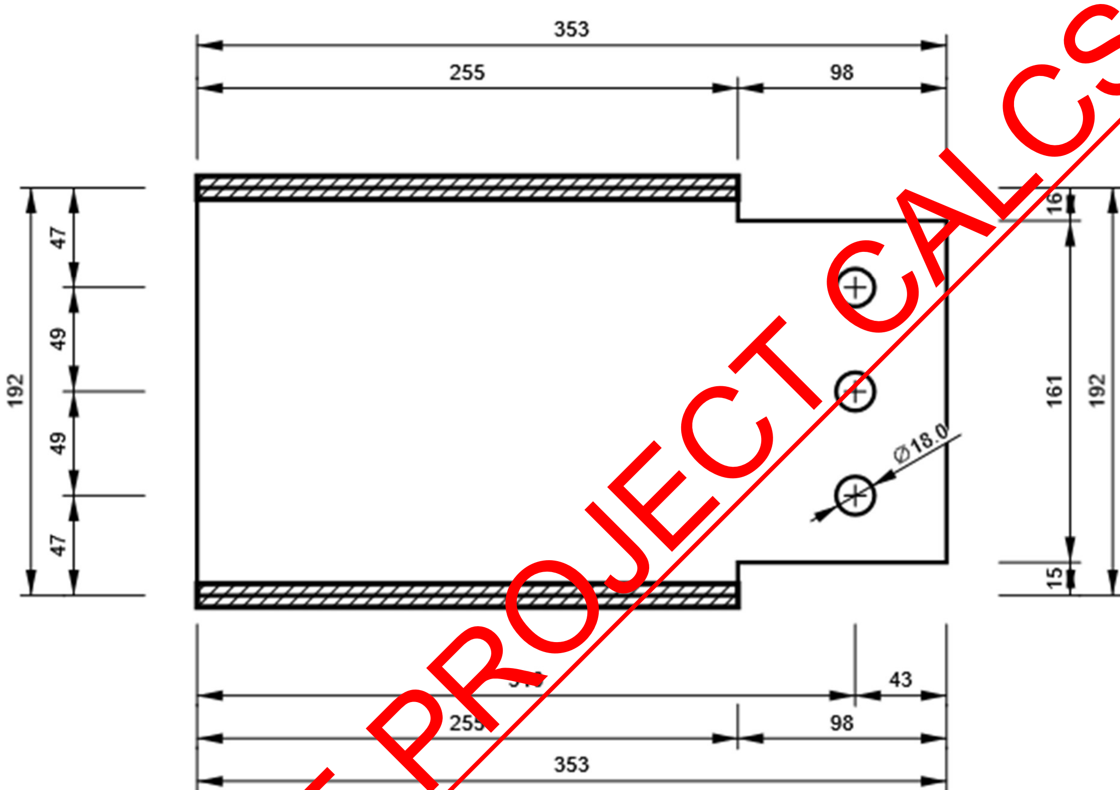

M2, UC 203 x 203 x 60 - Web 1:

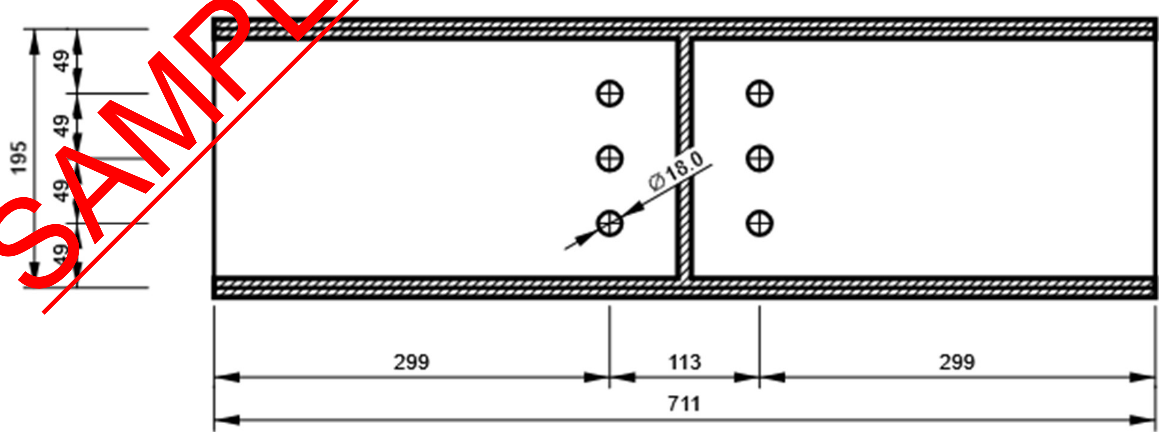

CLEAT1 a, L90X9 - Bottom flange 1:

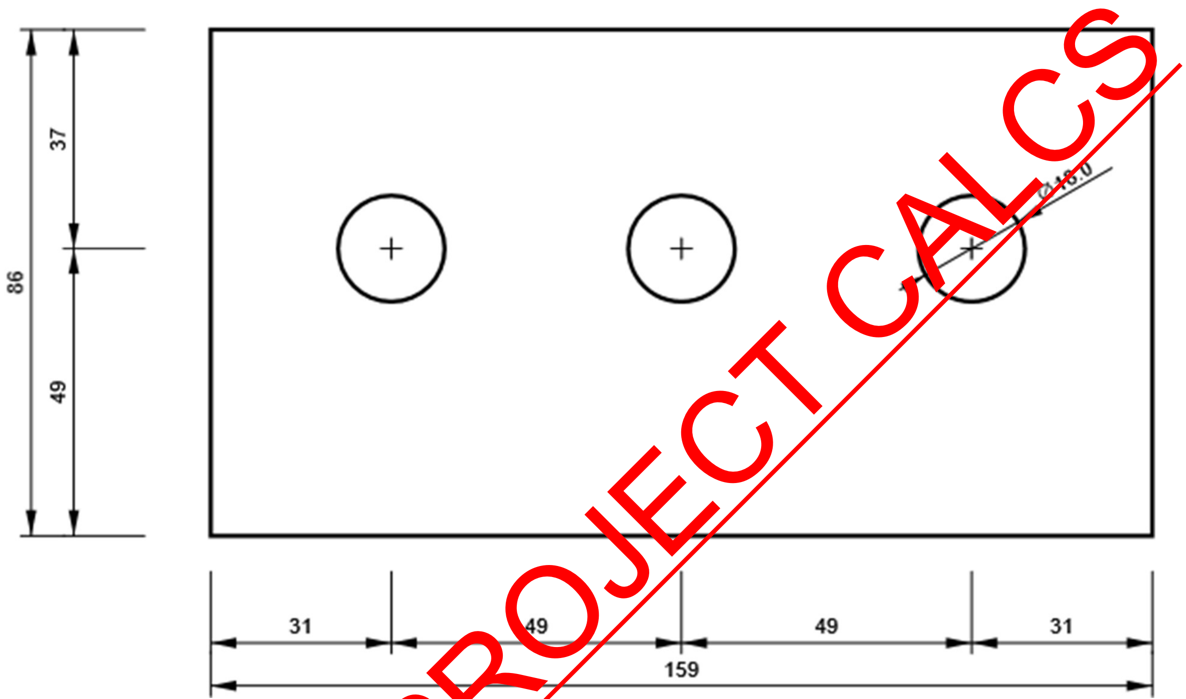

CLEAT1 a, L90X9 - Web 1:

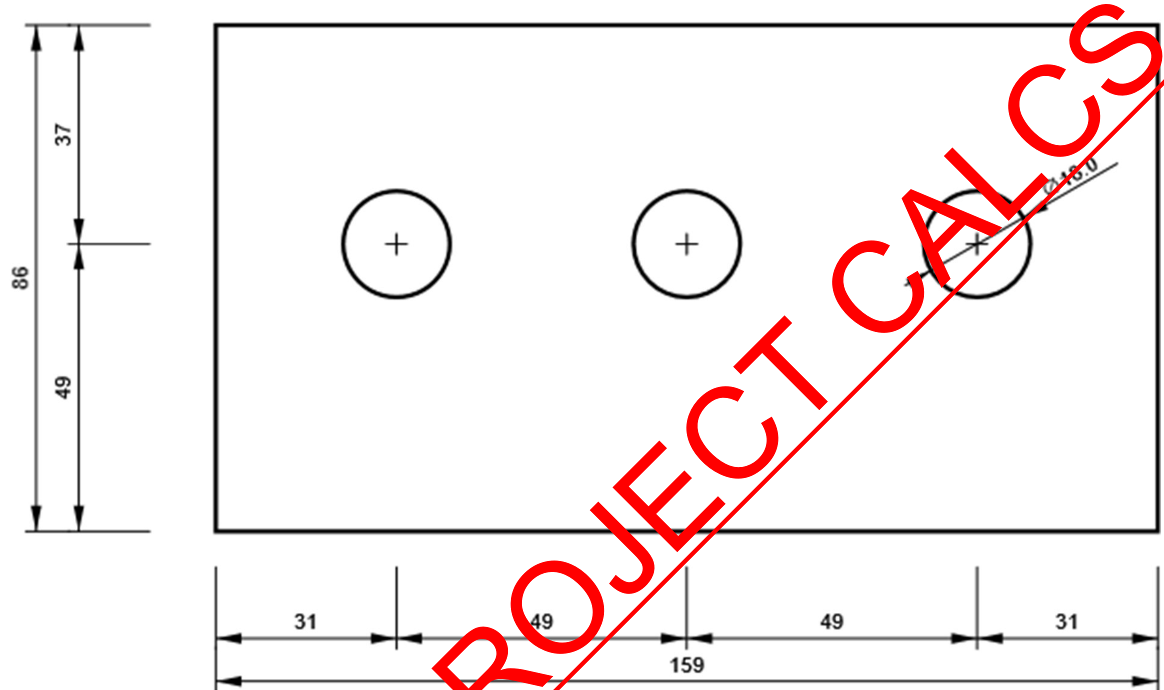

CLEAT1 b, L90X9 - Bottom flange 1:

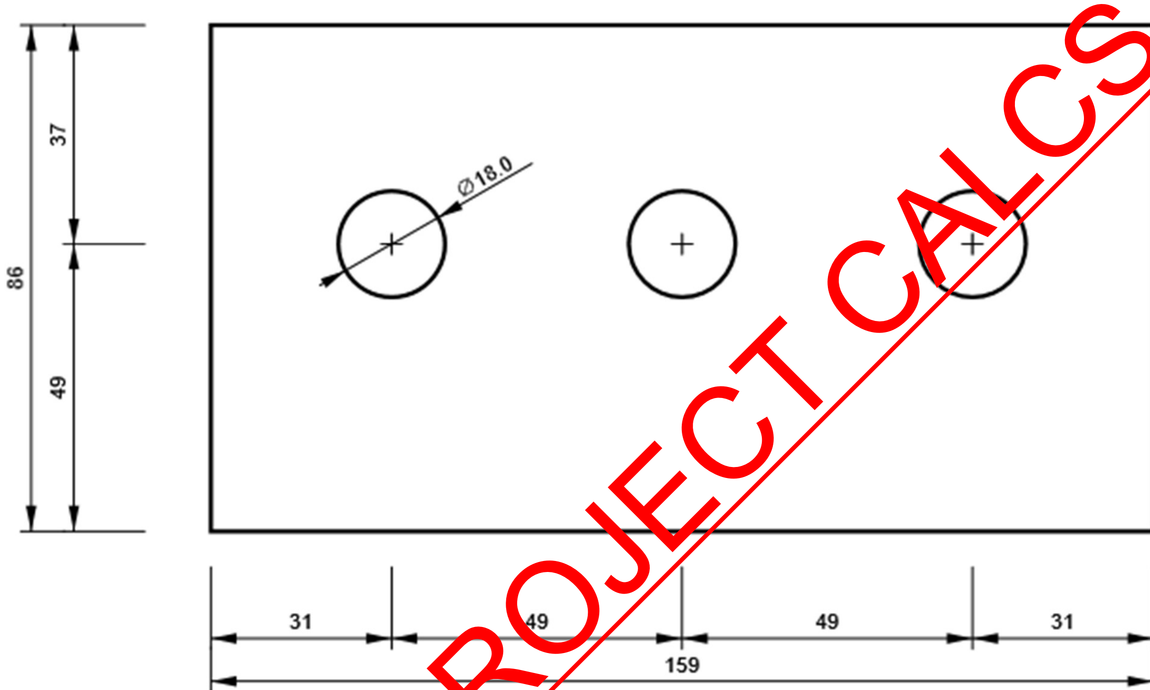

CLEAT1 b, L90X9 - Web 1:

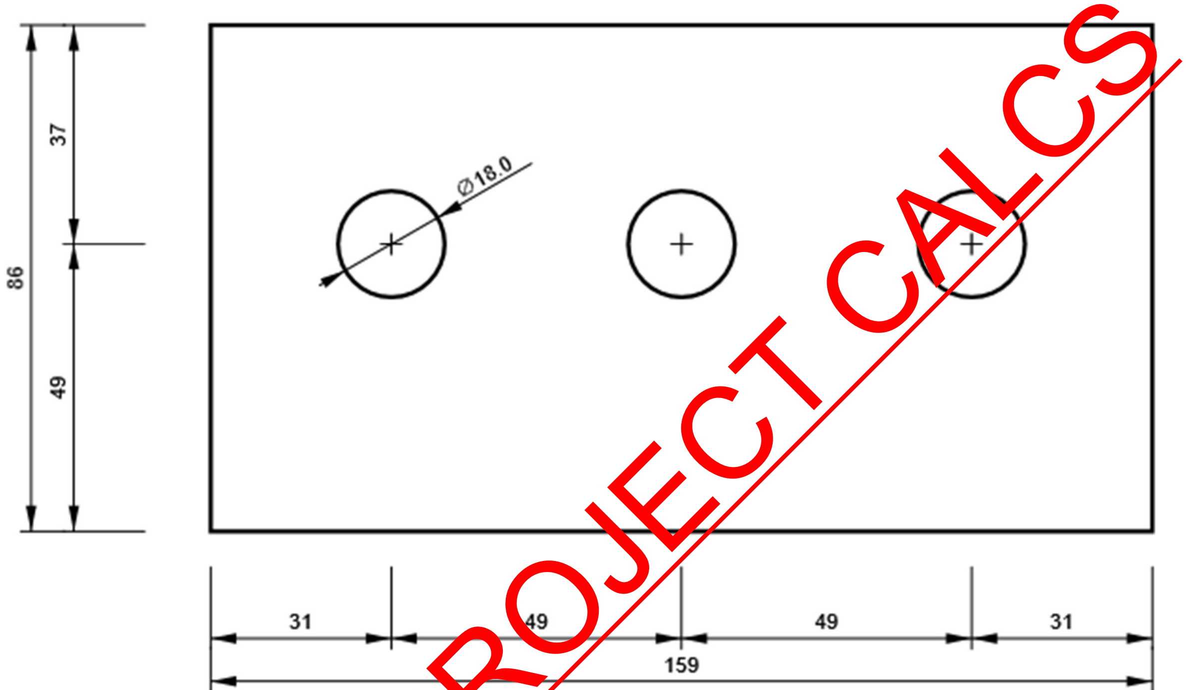

02 TOWERFIELDS WESTERHAM ROAD
BROMLEY, BR2 6HF
Email: info@Pearlepp.co.uk
Website: www. pearlepp.co.uk
Tel no. 02035763199

- **Connection-14**

Project data

Project name	
Project number	
Author	
Description	
Date	
Design code	EN

Material

Steel	S 275

Project item CON14

Design

Name	CON14
Description	
Analysis	Stress, strain/ simplified loading

Beams and columns

Name	Cross-section	β – Direction [°]	γ - Pitch [°]	α - Rotation [°]	Offset ex [mm]	Offset ey [mm]	Offset ez [mm]	Forces in	X [mm]
C	3 - SHS100/100/5.0	0.0	90.0	0.0	0	0	0	Bolts	0
B	2 - UB 203 x 133 x 30	0.0	0.0	0.0	-140	0	0	Bolts	140
M3	4 - UB 152 x 89 x 16	-60.0	0.0	0.0	0	-20	25	Bolts	78

02 TOWERFIELDS WESTERHAM ROAD BROMLEY, BR2 6HF Email: info@Pearlepp.co.uk Website: www. pearlepp.co.uk Tel no. 02035763199	**Project:** 68 GROVE PARK RD UK		**Sheet No./Rev.** 375
	Job Ref. 2024-06-	**Structural Engineer** **MM**	**Date** **11/06/2024**

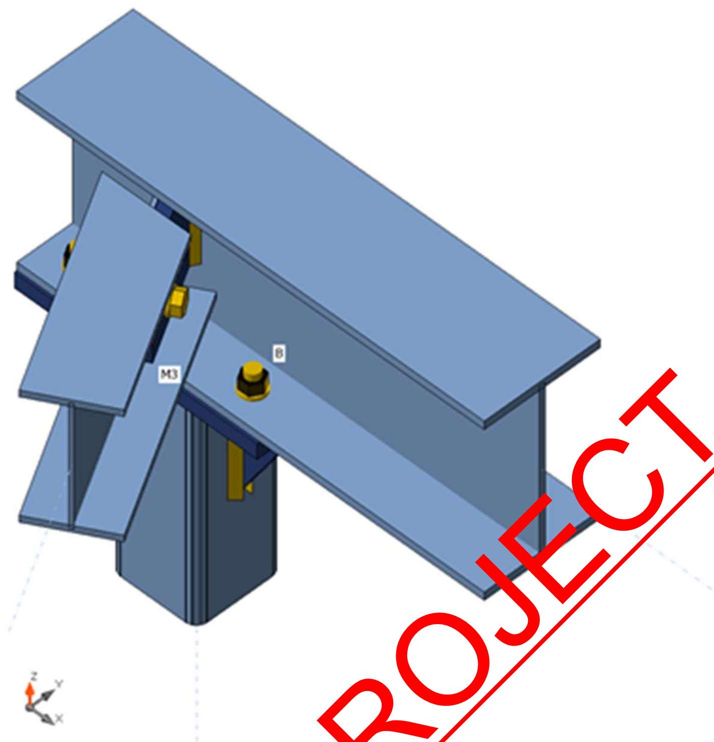

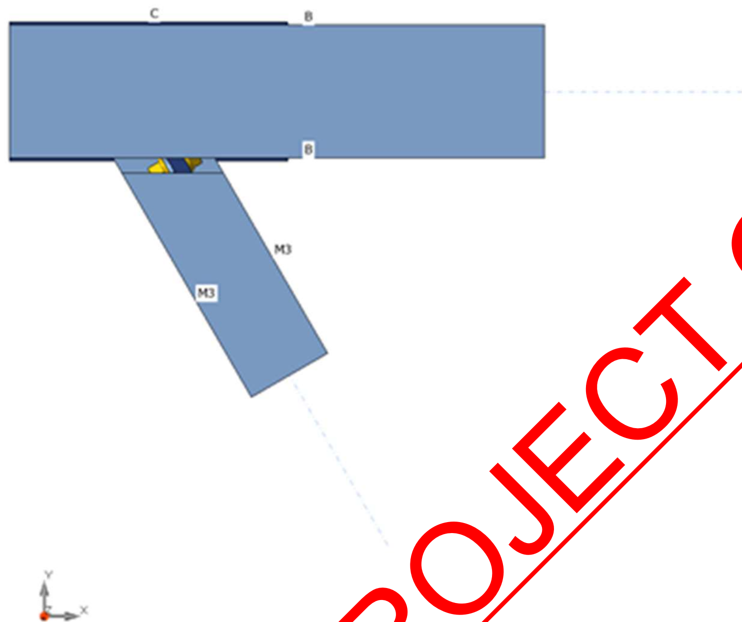

C
B
B
M3
M3
Y
X

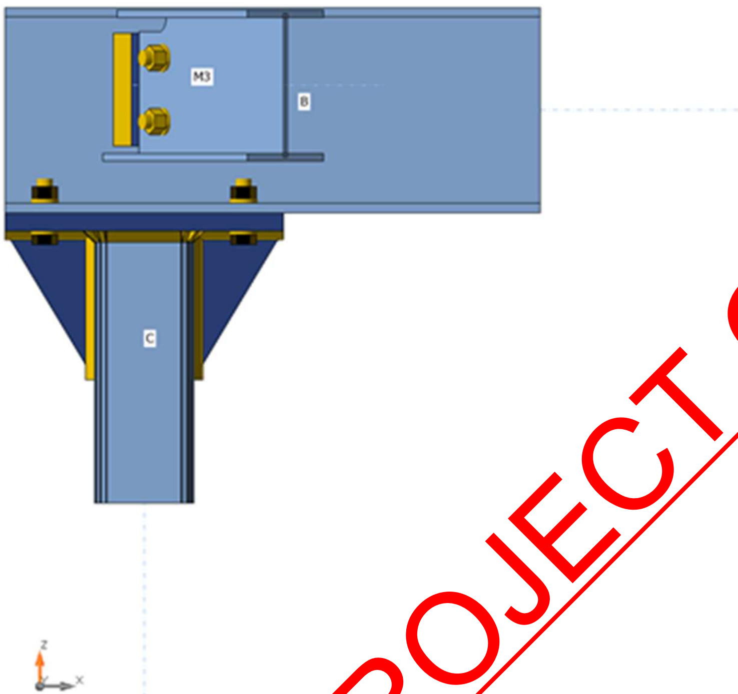
M3
B
C
z
x

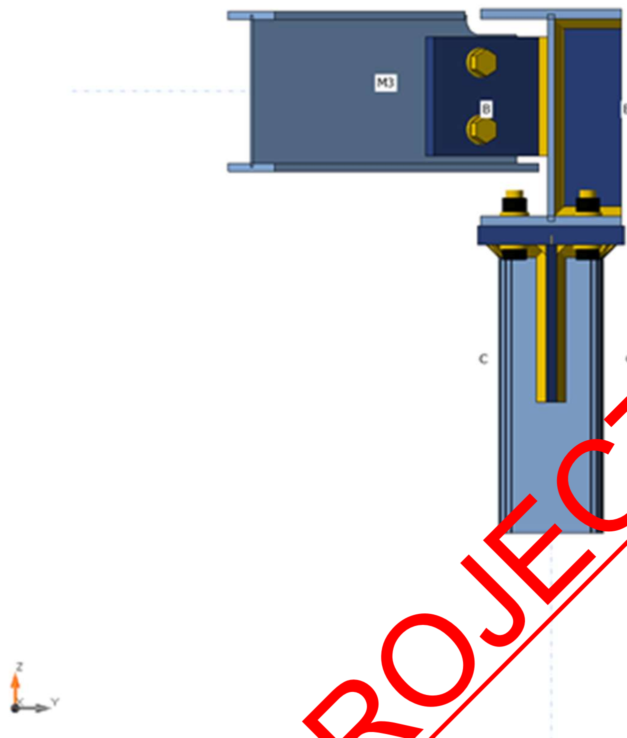

Coss-sections

Name	Material
3 - SHS100/100/5.0	S 275
2 - UB 203 x 133 x 30	S 275
4 - UB 152 x 89 x 16	S 275

Cross-sections

Name	Material	Drawing
3 - SHS100/100/5.0	S 275	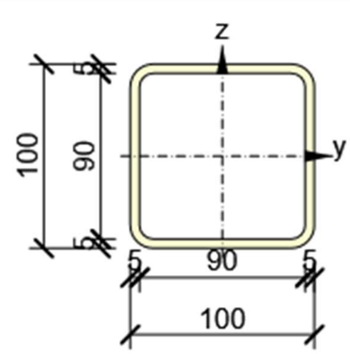

2 - UB 203 x 133 x 30	S 275	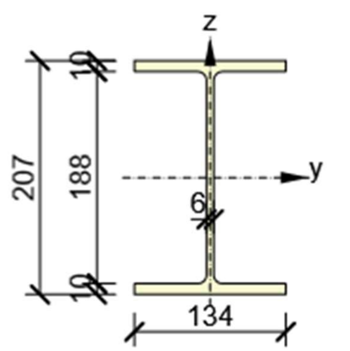
4 - UB 152 x 89 x 16	S 275	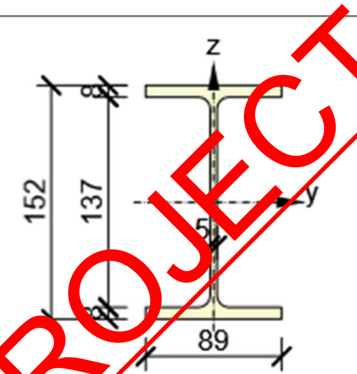

- **Bolts**

Name	Bolt assembly	Diameter [mm]	fu [MPa]	Gross area [mm^2]
M16 8.8	M16 8.8	16	800.0	201

- **Load effects (equilibrium not required)**

Name	Member	N [kN]	Vy [kN]	Vz [kN]	Mx [kNm]	My [kNm]	Mz [kNm]
LE1	B	0.0	0.0	-15.0	0.0	3.0	0.0
	M3	0.0	0.0	-15.0	0.0	2.0	0.0

- Check
- **Summary**

Name	Value	Status
Analysis	100.0%	OK
Plates	0.3 < 5.0%	OK
Bolts	71.7 < 100%	OK

Welds	66.0 < 100%	OK
Buckling	28.30	
GMNA	Calculated	

- **Plates**

Name	Thickness [mm]	Loads	σ_{Ed} [MPa]	ε_{Pl} [%]	σc_{Ed} [MPa]	Status
C	5.0	LE1	220.6	0.0	0.0	OK
B-bfl 1	9.6	LE1	275.5	0.3	17.1	OK
B-tfl 1	9.6	LE1	34.0	0.0	0.0	OK
B-w 1	6.4	LE1	275.1	0.0	0.0	OK
M3-bfl 1	7.7	LE1	44.7	0.0	0.0	OK
M3-tfl 1	7.7	LE1	57.3	0.0	0.0	OK
M3-w 1	4.5	LE1	275.4	0.2	24.6	OK
EP1	18.0	LE1	101.0	0.0	17.1	OK
RIB1	10.0	LE1	136.8	0.0	0.0	OK
RIB2	10.0	LE1	113.4	0.0	0.0	OK
STIFF1	10.0	LE1	180.2	0.0	0.0	OK
FP2	15.0	LE1	162.7	0.0	24.6	OK

- **Design data**

Material	f_y [MPa]	ε_{lim} [%]
S 275	275.0	5.0

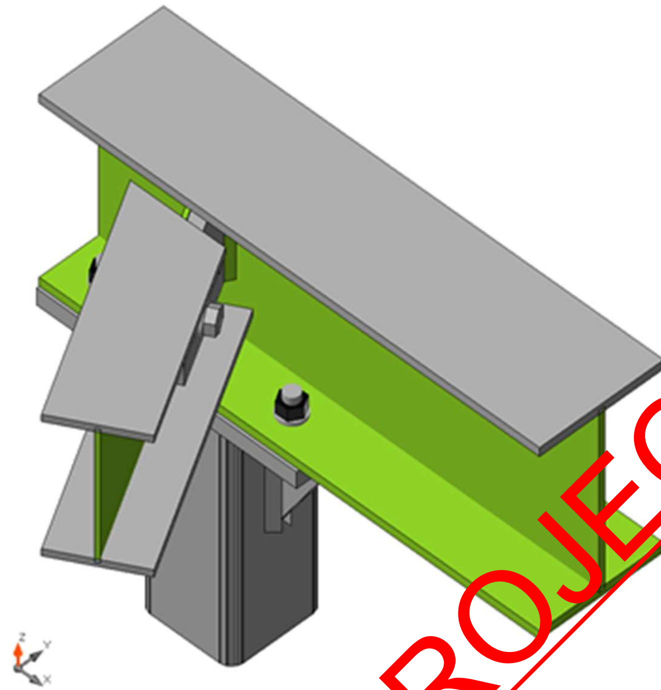

Overall check, LE1

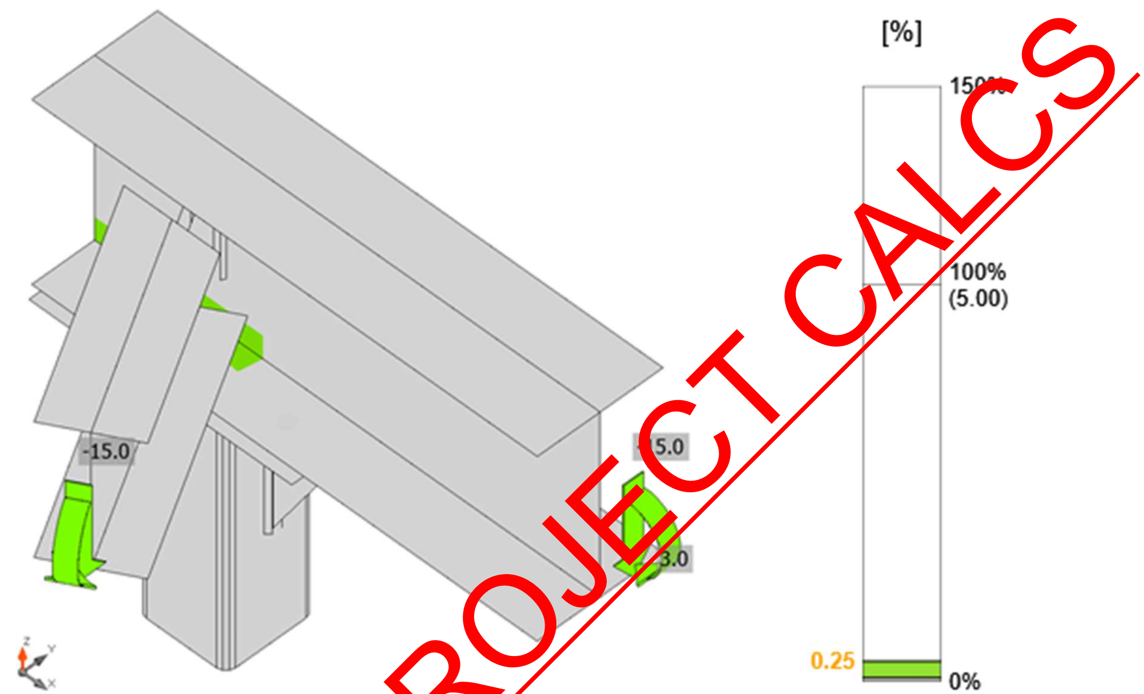

Strain check, LE1

PEPP 02 TOWERFIELDS WESTERHAM ROAD BROMLEY, BR2 6HF Email: info@Pearlepp.co.uk Website: www. pearlepp.co.uk Tel no. 02035763199	**Project:** 68 GROVE PARK RD UK		**Sheet No./Rev.** 383
	Job Ref. 2024-06-	**Structural Engineer** **MM**	**Date** **11/06/2024**

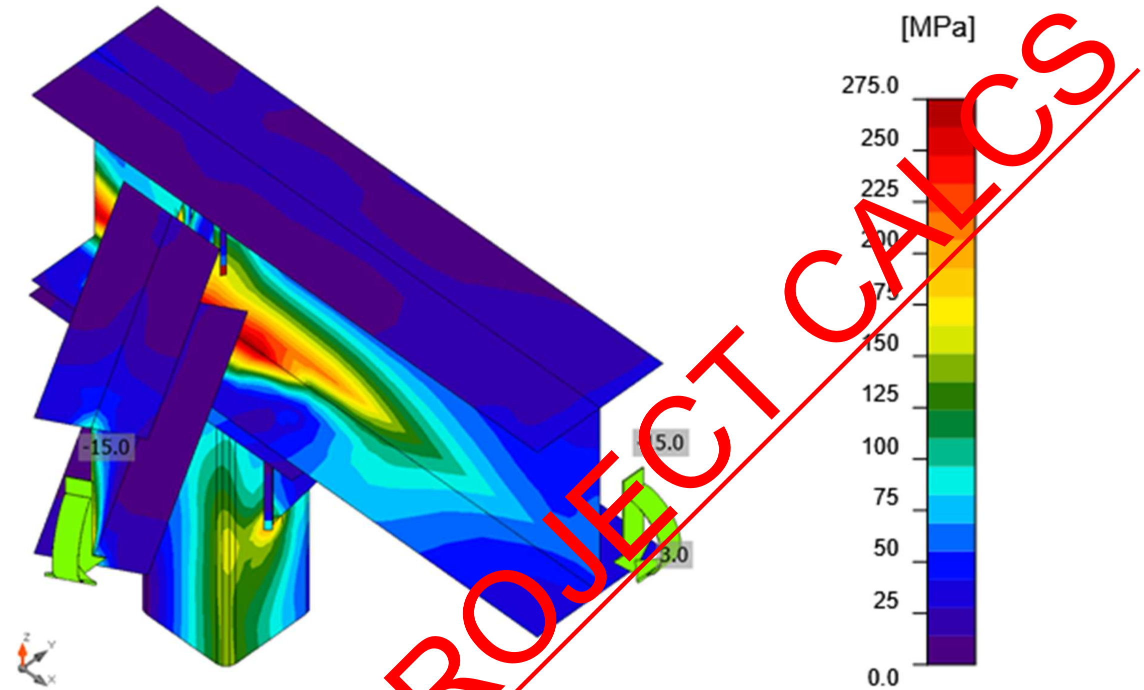

Equivalent stress, LE1

- **Bolts**

	Name	Grade	Loads	$F_{t,Ed}$ [kN]	V [kN]	Ut_t [%]	$F_{b,Rd}$ [kN]	Ut_s [%]	Ut_{ts} [%]	Status
	B1	M16 8.8 - 1	LE1	15.0	0.7	16.6	132.1	1.2	13.1	OK
	B2	M16 8.8 - 1	LE1	1.4	0.9	1.5	132.1	1.5	2.5	OK
	B3	M16 8.8 - 1	LE1	34.5	1.3	38.2	97.8	2.1	29.4	OK
	B4	M16 8.8 - 1	LE1	3.9	0.3	4.3	132.1	0.5	3.5	OK
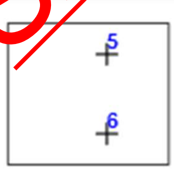	B5	M16 8.8 - 2	LE1	10.4	29.7	14.2	41.5	71.7	57.5	OK
	B6	M16 8.8 - 2	LE1	8.6	29.2	11.7	61.9	48.5	55.2	OK

- **Design data**

Name	$F_{t,Rd}$	$B_{p,Rd}$	$F_{v,Rd}$

	[kN]	[kN]	[kN]
M16 8.8 - 1	90.4	155.6	60.3
M16 8.8 - 2	90.4	72.9	60.3

- **Detailed result for B5**

Tension resistance check (EN 1993-1-8 tab 3.4)

$F_{t,Rd} = \frac{k_2 f_{ub} A_s}{\gamma_{M2}} =$ 90.4 kN ≥ $F_t =$ 10.4 kN

where:

$k_2 =$ 0.90 – Factor

$f_{ub} =$ 800.0 MPa – Ultimate tensile strength of the bolt

$A_s =$ 157 mm^2 – Tensile stress area of the bolt

$\gamma_{M2} =$ 1.25 – Safety factor

Punching resistance check (EN 1993-1-8 tab 3.4)

$B_{p,Rd} = \frac{0.6 \pi d_m t_p f_u}{\gamma_{M2}} =$ 72.9 kN ≥ $F_t =$ 10.4 kN

where:

$d_m =$ 25 mm – The mean of the across points and across flats dimensions of the bolt head or the nut, whichever is smaller

$t_p =$ 5 mm – Thickness

$f_u =$ 430.0 MPa – Ultimate strength

$\gamma_{M2} =$ 1.25 – Safety factor

Shear resistance check (EN 1993-1-8 tab 3.4)

$F_{v,Rd} = \frac{\beta_p \alpha_v f_{ub} A}{\gamma_{M2}} =$ 60.3 kN ≥ $V =$ 29.7 kN

where:

$\beta_p =$ 1.00 – Reducing factor

$\alpha_v =$ 0.60 – Reducing factor

$f_{ub} =$ 800.0 MPa – Ultimate tensile strength of the bolt

$A =$ 157 mm^2 – Tensile stress area of the bolt

$\gamma_{M2} =$ 1.25 – Safety factor

Bearing resistance check (EN 1993-1-8 tab 3.4)

$F_{b,Rd} = \frac{k_1 \alpha_b f_u d t}{\gamma_{M2}} =$ 41.5 kN ≥ $V =$ 29.7 kN

where:

$k_1 = \min(2.8\frac{e_2}{d_0} - 1.7, 1.4\frac{p_2}{d_0} - 1.7, 2.5) =$ 2.50 – Factor for edge distance and bolt spacing perpendicular to the direction of load transfer

$\alpha_b = \min(\frac{e_1}{3d_0}, \frac{p_1}{3d_0} - \frac{1}{4}, \frac{f_{ub}}{f_u}, 1) = 0.67$ – Factor for end distance and bolt spacing in direction of load transfer

$e_2 = 27$ mm – Distance to the plate edge perpendicular to the shear force

$p_2 = \infty$ mm – Distance between bolts perpendicular to the shear force

$d_0 = 18$ mm – Bolt hole diameter

$e_1 = 36$ mm – Distance to the plate edge in the direction of the shear force

$p_1 = \infty$ mm – Distance between bolts in the direction of the shear force

$f_{ub} = 800.0$ MPa – Ultimate tensile strength of the bolt

$f_u = 430.0$ MPa – Ultimate strength

$d = 16$ mm – Nominal diameter of the fastener

$t = 5$ mm – Thickness of the plate

$\gamma_{M2} = 1.25$ – Safety factor

Interaction of tension and shear (EN 1993-1-8 tab 3.4)

$U_{tts} = \frac{F_{v,Ed}}{F_{v,Rd}} + \frac{F_{t,Ed}}{1.4F_{t,Rd}} = 57.5$ %

Utilization in tension

$U_{tt} = \frac{F_{t,Ed}}{\min(F_{t,Rd}; B_{p,Rd})} = 14.2$ %

Utilization in shear

$U_{ts} = \frac{V_{Ed}}{\min(F_{v,Rd}; F_{b,Rd})} = 11.7$ %

-

- **Welds (Plastic redistribution)**

Item	Edge	Throat th. [mm]	Length [mm]	Loads	$\sigma_{w,Ed}$ [MPa]	ε_{Pl} [%]	$\sigma_\perp$ [MPa]	$\tau_{\parallel}$ [MPa]	$\tau_\perp$ [MPa]	Ut [%]	Ut_c [%]	Status
EP1	C	◢8.5	362	LE1	112.4	0.0	59.8	45.8	-30.3	27.8	11.3	OK
EP1	RIB1	◢6.5 ◣	90	LE1	57.1	0.0	-1.8	-32.9	0.7	14.1	7.0	OK
		◢6.5 ◣	90	LE1	68.3	0.0	-9.6	-38.4	6.9	16.9	12.9	OK
C-w 3	RIB1	◢6.5 ◣	150	LE1	88.8	0.0	-5.6	-50.9	-5.7	21.9	5.2	OK
		◢6.5 ◣	150	LE1	89.3	0.0	-5.3	51.2	5.3	22.1	5.0	OK
EP1	RIB2	◢6.5 ◣	90	LE1	41.9	0.0	-2.8	23.7	-4.5	10.3	5.8	OK

		◢6.5 ◣	90	LE1	77.5	0.0	13.3	42.6	-11.5	19.2	11.1	OK
C-w 1	RIB2	◢6.5 ◣	150	LE1	72.4	0.0	5.3	41.4	5.2	17.9	3.7	OK
		◢6.5 ◣	150	LE1	72.7	0.0	4.9	-41.6	-4.9	18.0	3.8	OK
B-bfl 1	STIFF 1	◢6.5 ◣	64	LE1	144.8	0.0	45.2	45.6	65.0	35.8	24.2	OK
		◢6.5 ◣	64	LE1	123.9	0.0	74.9	-15.1	-55.0	30.6	22.2	OK
B-w 1	STIFF 1	◢6.5 ◣	188	LE1	86.6	0.0	-27.1	40.3	[illegible]	21.4	16.6	OK
		◢6.5 ◣	188	LE1	74.0	0.0	-26.8	[illegible]	38.7	18.3	13.7	OK
B-tfl 1	STIFF 1	◢6.5 ◣	64	LE1	16.3	0.0	1.6	6.8	6.4	4.0	2.0	OK
		◢6.5 ◣	64	LE1	14.3	0.0	6.4	-7.2	-1.6	3.5	2.2	OK
B-w 1	FP2	◢8.5 ◣	113	LE1	251.6	0.0	[illegible]	112.2	-74.7	62.2	15.6	OK
		◢8.5 ◣	113	LE1	267.2	0.0	-54.5	-60.6	138.3	66.0	18.8	OK

- **Design data**

	β_w [-]	$\sigma_{w,Rd}$ [MPa]	0.9 σ [MPa]
S 275	0.85	404.7	309.6

- **Detailed result for B-w 1 FP2**

Weld resistance check (EN 1993-1-8 4.5.3.2)

$\sigma_{w,Rd} = f_u/(\beta_w \gamma_{M2}) =$ 404.7 MPa ≥ $\sigma_{w,Ed} = [\sigma_\perp^2 + 3(\tau_\perp^2 + \tau_\parallel^2)]^{0.5} =$ 267.2 MPa

$\sigma_{\perp,Rd} = 0.9 f_u/\gamma_{M2} =$ 309.6 MPa ≥ $|\sigma_\perp| =$ 54.5 MPa

where:

$f_u =$ 430.0 MPa – Ultimate strength

$\beta_w =$ 0.85 – appropriate correlation factor taken from Table 4.1

$\gamma_{M2} =$ 1.25 – Safety factor

Stress utilization

$U_t = \max(\frac{\sigma_{w,Ed}}{\sigma_{w,Rd}}; \frac{|\sigma_\perp|}{\sigma_{\perp,Rd}}) =$ 66.0 %

-

- **Buckling**

Loads	Shape	Factor [-]
LE1	1	28.30
	2	34.59
	3	35.70
	4	36.24
	5	45.95
	6	49.20

- Bill of material
- **Manufacturing operations**

Name	Plates [mm]	Shape	Nr.	Welds [mm]	Length [mm]	Bolts	Nr.
EP1	P18.0x140.0-280.0 (S 275)		1	Fillet: a = 8.5	362.1	M16 8.8	4
RIB1	P10.0x90.0-150.0 (S 275)	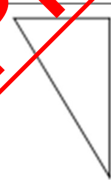	1	Double fillet: a = 6.5	240.0		
RIB2	P10.0x90.0-150.0 (S 275)		1	Double fillet: a = 6.5	240.0		
STIFF1	P10.0x63.8-187.6 (S 275)		1	Double fillet: a = 6.5	315.1		

PEPP PEARL ENGINEERS, PLANNERS & PROJECT MANAGERS 02 TOWERFIELDS WESTERHAM ROAD BROMLEY, BR2 6HF Email: info@Pearlepp.co.uk Website: www. pearlepp.co.uk Tel no. 02035763199	**Project:** 68 GROVE PARK RD UK	**Sheet No./Rev.** 388
	Job Ref. 2024-06- **Structural Engineer** **MM**	**Date** **11/06/2024**

FP2	P15.0x130.0-113.4 (S 275)		1	Double fillet: a = 8.5	113.4	M16 8.8	2

- **Welds**

Type	Material	Throat thickness [mm]	Leg size [mm]	Length [mm]
Fillet	S 275	8.5	12.0	362.1
Double fillet	S 275	6.5	9.2	795.1
Double fillet	S 275	8.5	12.0	113.4

- **Bolts**

Name	Grip length [mm]	Count
M16 8.8	28	4
M16 8.8	20	2

- **Drawing**
- **EP1**
- **P18.0x280-140 (S 275)**

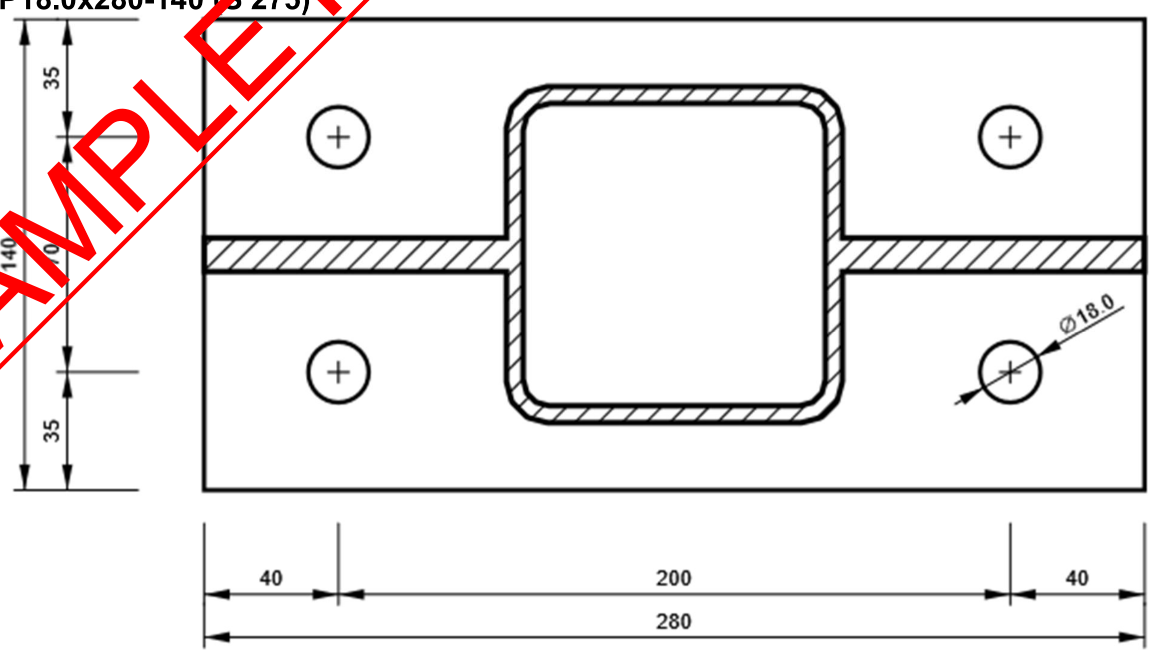

-

- **RIB1**
- **P10.0x150-90 (S 275)**

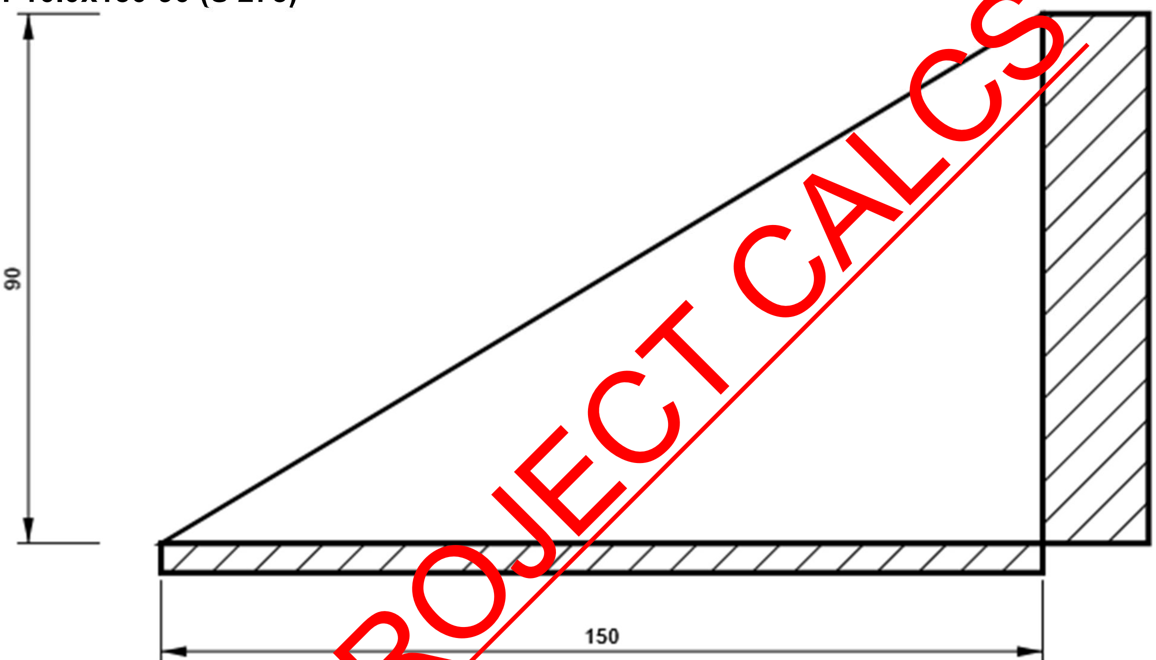

-
- **RIB2**
- **P10.0x150-90 (S 275)**

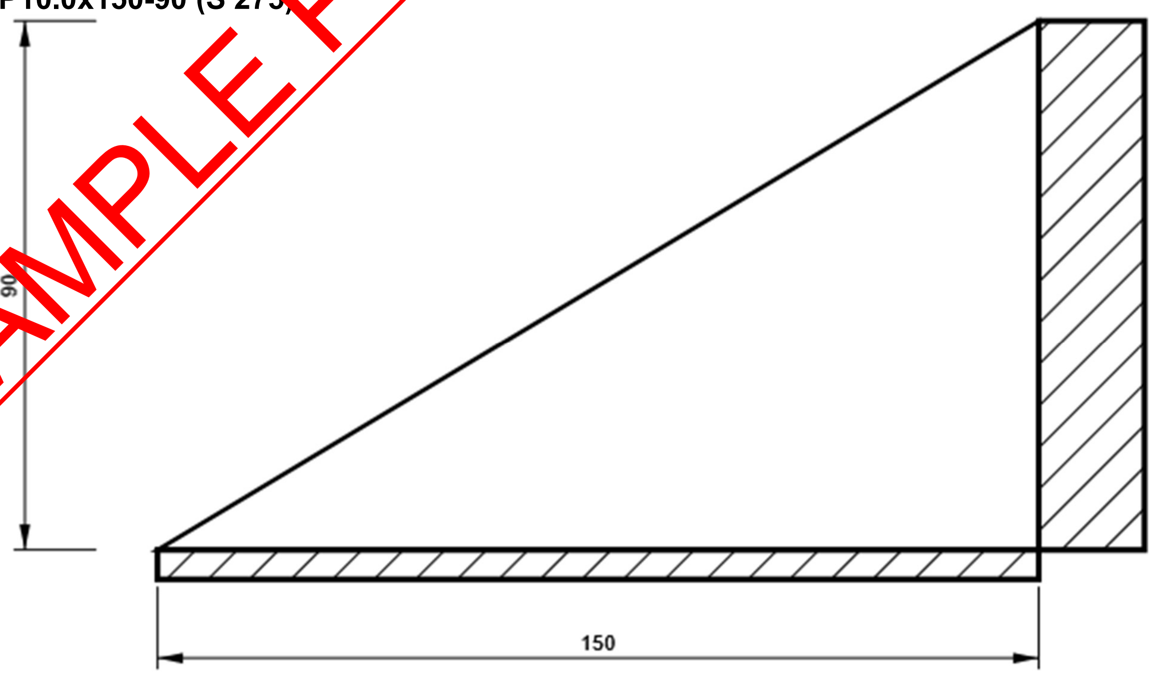

-

- **STIFF1**
- **P10.0x188-64 (S 275)**

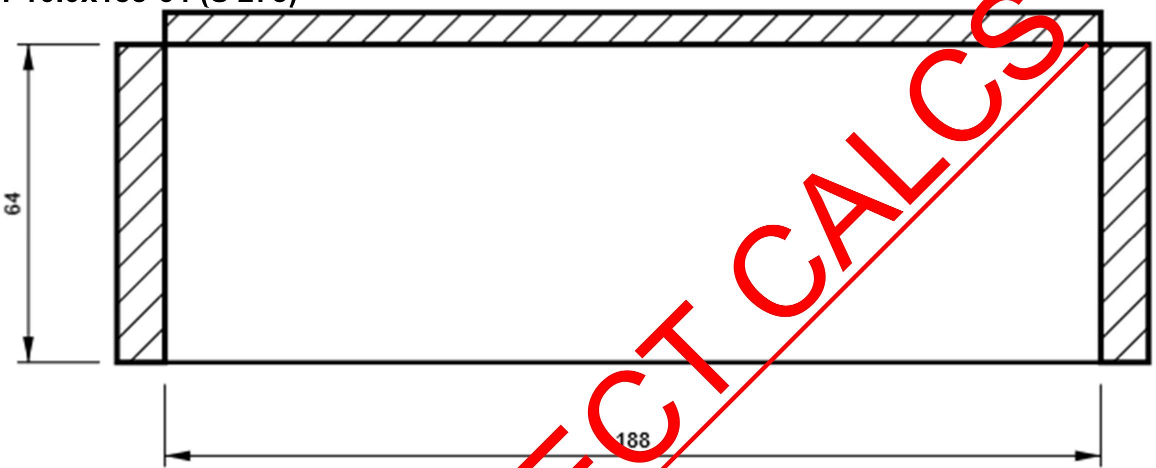

-
- **FP2**
- **P15.0x113-130 (S 275)**

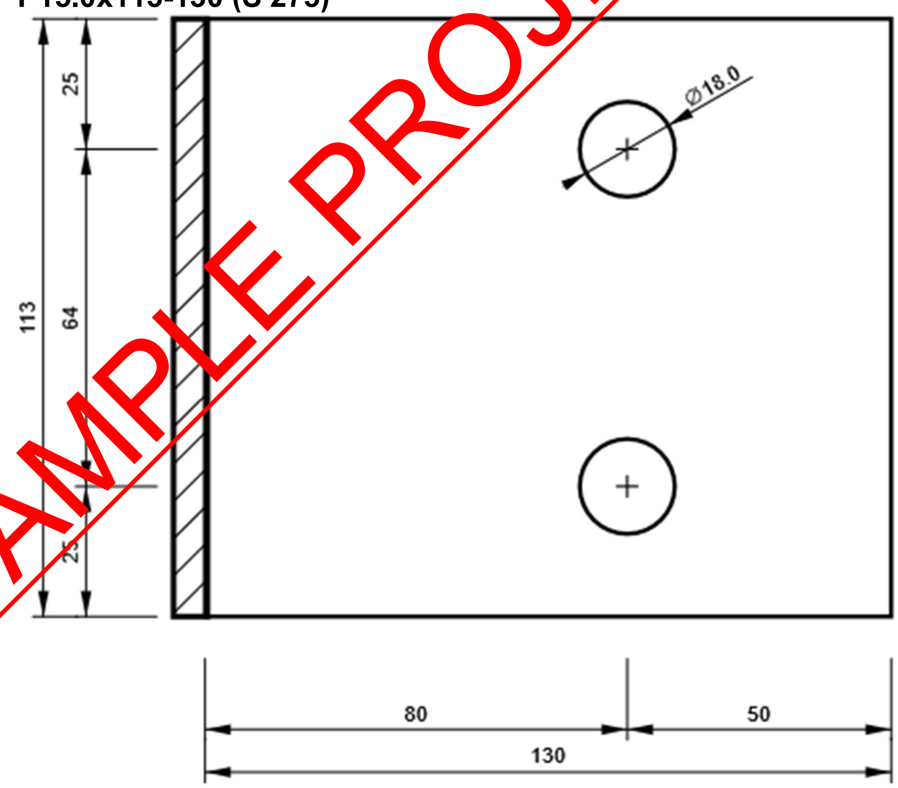

-

- **B, UB 203 x 133 x 30 - Bottom flange 1:**

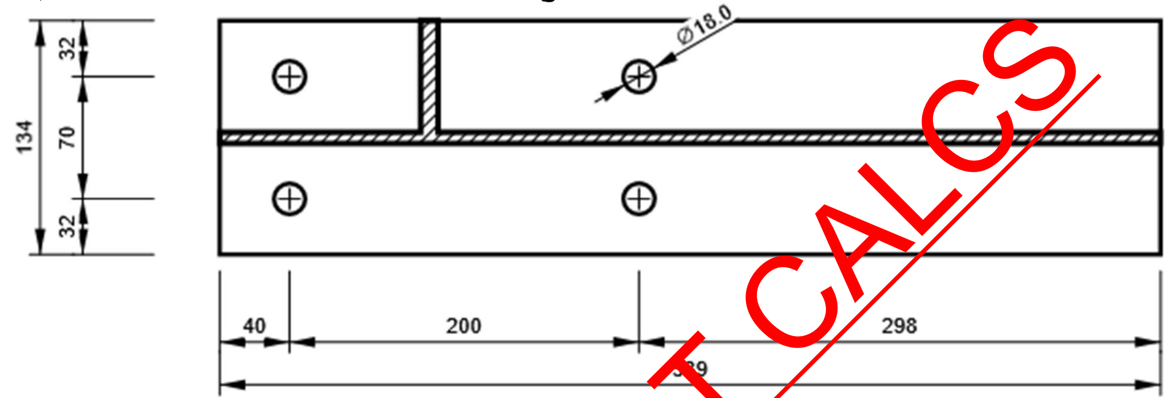

-
- **M3, UB 152 x 89 x 16 - Web 1:**

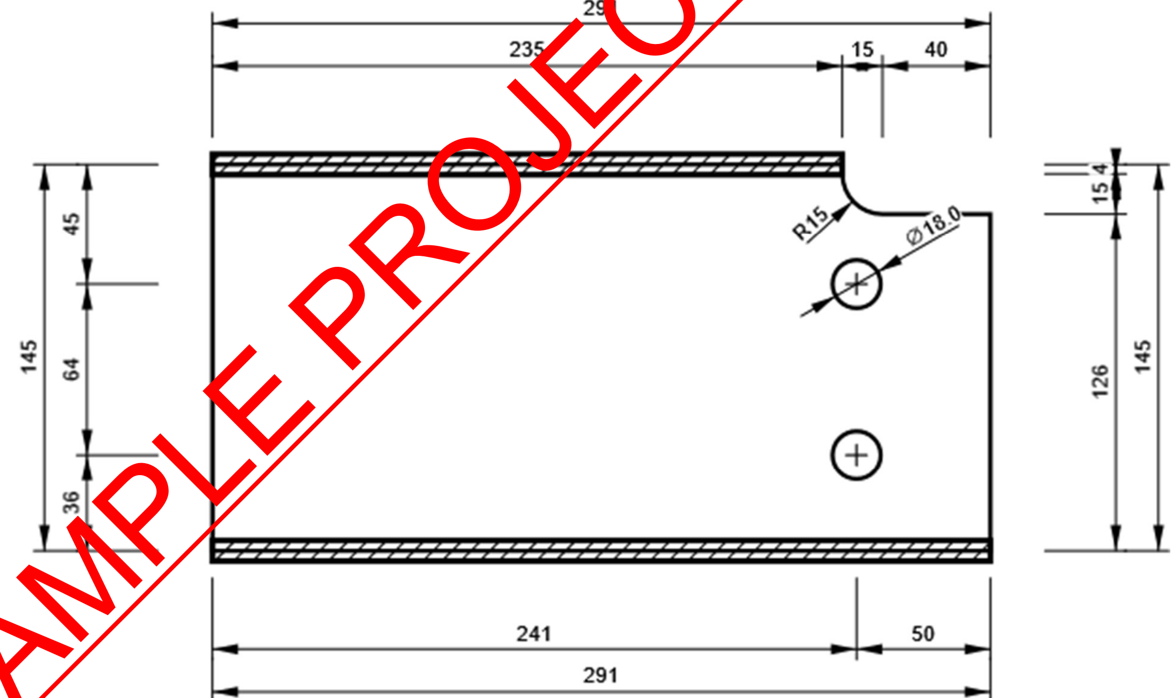

02 TOWERFIELDS WESTERHAM ROAD
BROMLEY, BR2 6HF
Email: info@Pearlepp.co.uk
Website: www. pearlepp.co.uk
Tel no. 02035763199

- **Connection-15**

Project data

Project name	
Project number	
Author	
Description	
Date	
Design code	EN

Material

Steel	S 275

Project item CON15

Design

Name	CON15
Description	
Analysis	Stress, strain/ simplified loading

Beams and columns

Name	Cross-section	β – Direction [°]	γ - Pitch [°]	α - Rotation [°]	Offset ex [mm]	Offset ey [mm]	Offset ez [mm]	Forces in	X [mm]
C	6 - CHS88.9/5.0	0.0	90.0	0.0	0	0	0	Bolts	0
B	4 - UB 152 x 89 x 16	0.0	0.0	0.0	-140	0	0	Bolts	140
M3	4 - UB 152 x 89 x 16	-120.0	0.0	0.0	0	-20	0	Bolts	100

PEPP PEARL ENGINEERS, PLANNERS & PROJECT MANAGERS	**Project:** 68 GROVE PARK RD UK		**Sheet No./Rev.** 393
02 TOWERFIELDS WESTERHAM ROAD BROMLEY, BR2 6HF Email: info@Pearlepp.co.uk Website: www. pearlepp.co.uk Tel no. 02035763199	**Job Ref. 2024-06-**	**Structural Engineer** **MM**	**Date** **11/06/2024**

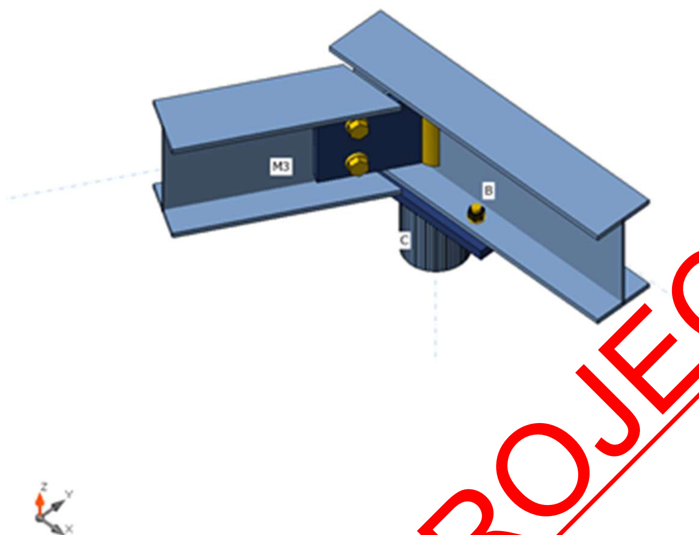

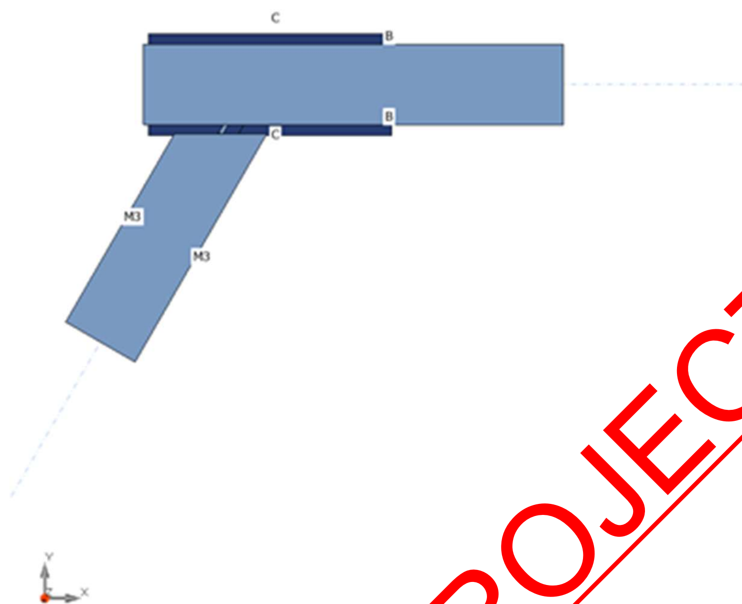

C
B
B
C
M3
M3
Y
X

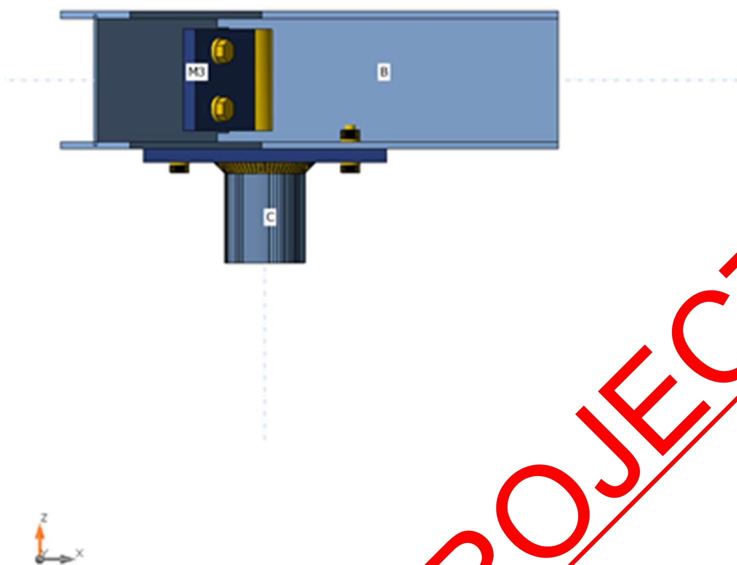

M3
B
C
z
x

PEPP PEARL ENGINEERS, PLANNERS & PROJECT MANAGERS	**Project:** 68 GROVE PARK RD UK		**Sheet No./Rev.** 396
02 TOWERFIELDS WESTERHAM ROAD BROMLEY, BR2 6HF Email: info@Pearlepp.co.uk Website: www. pearlepp.co.uk Tel no. 02035763199	**Job Ref. 2024-06-**	**Structural Engineer** **MM**	**Date** **11/06/2024**

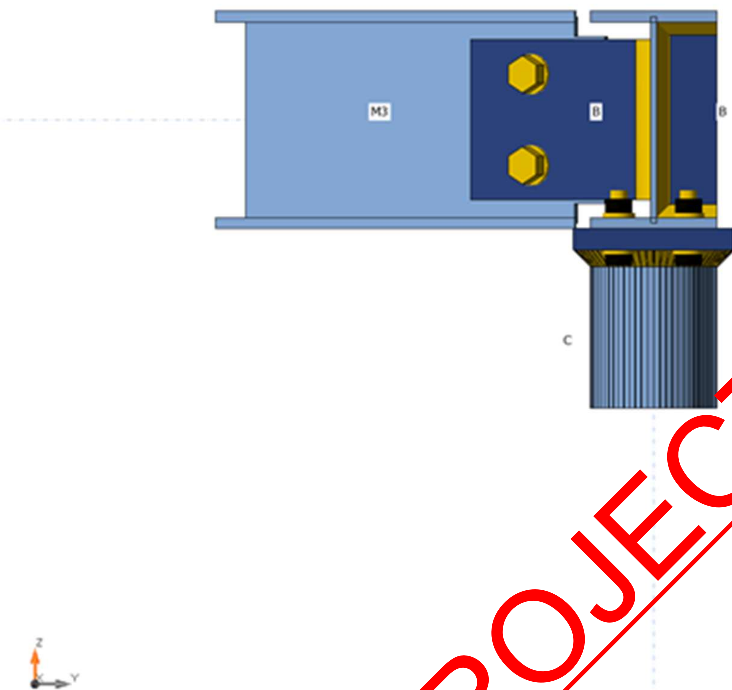

Cross-sections

Name	Material
6 - CHS88.9/5.0	S 275
4 - UB 152 x 89 x 16	S 275

Cross-sections

Name	Material	Drawing
6 - CHS88.9/5.0	S 275	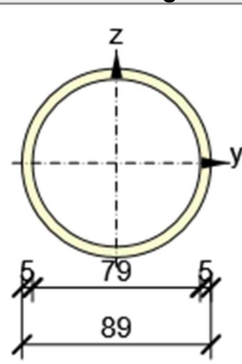

4 - UB 152 x 89 x 16	S 275	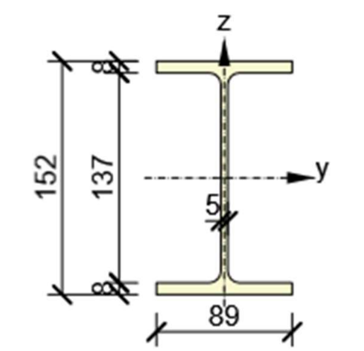

Bolts

Name	Bolt assembly	Diameter [mm]	fu [MPa]	Gross area [mm²]
M12 8.8	M12 8.8	12	800.0	113
M16 8.8	M16 8.8	16	800.0	201

Load effects (equilibrium not required)

Name	Member	N [kN]	Vy [kN]	Vz [kN]	Mx [kNm]	My [kNm]	Mz [kNm]
LE1	B	0.0	0.0	-15.0	0.0	3.0	0.0
	M3	0.0	0.0	-15.0	0.0	2.0	0.0

Check

Summary

Name	Value	Status
Analysis	100.0%	OK
Plates	1.6 < 5.0%	OK
Bolts	54.5 < 100%	OK
Welds	64.6 < 100%	OK
Buckling	33.49	
GMNA	Calculated	

Plates

Name	Thickness [mm]	Loads	σ_{Ed} [MPa]	ε_{Pl} [%]	σc_{Ed} [MPa]	Status
C	5.0	LE1	128.8	0.0	0.0	OK
B-bfl 1	7.7	LE1	278.3	1.6	52.0	OK

B-tfl 1	7.7	LE1	208.0	0.0	0.0	OK
B-w 1	4.5	LE1	277.1	1.0	0.0	OK
M3-bfl 1	7.7	LE1	135.8	0.0	0.0	OK
M3-tfl 1	7.7	LE1	143.8	0.0	0.0	OK
M3-w 1	4.5	LE1	275.8	0.4	45.3	OK
EP1	15.0	LE1	162.7	0.0	52.0	OK
STIFF1	10.0	LE1	275.1	0.1	0.0	OK
FP2	15.0	LE1	275.1	0.0	45.3	OK

Design data

Material	f_y [MPa]	ε_{lim} [%]
S 275	275.0	5.0

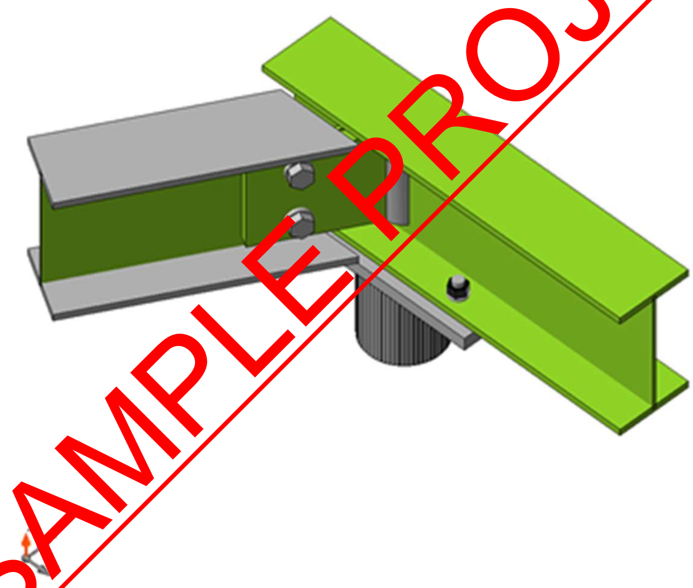

Overall check, LE1

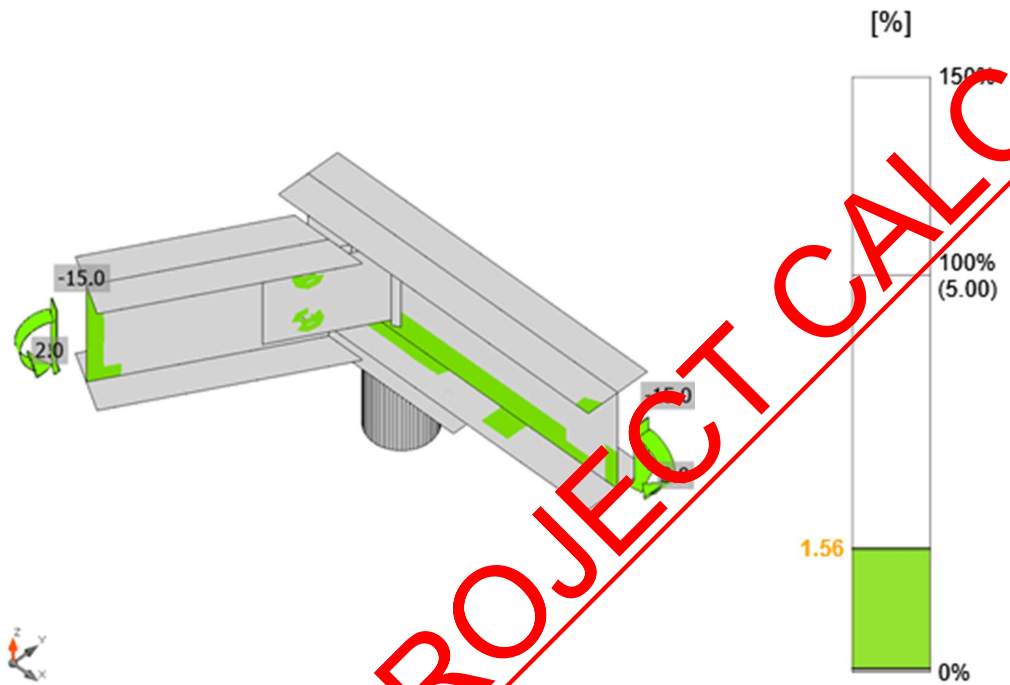

Strain check, LE1

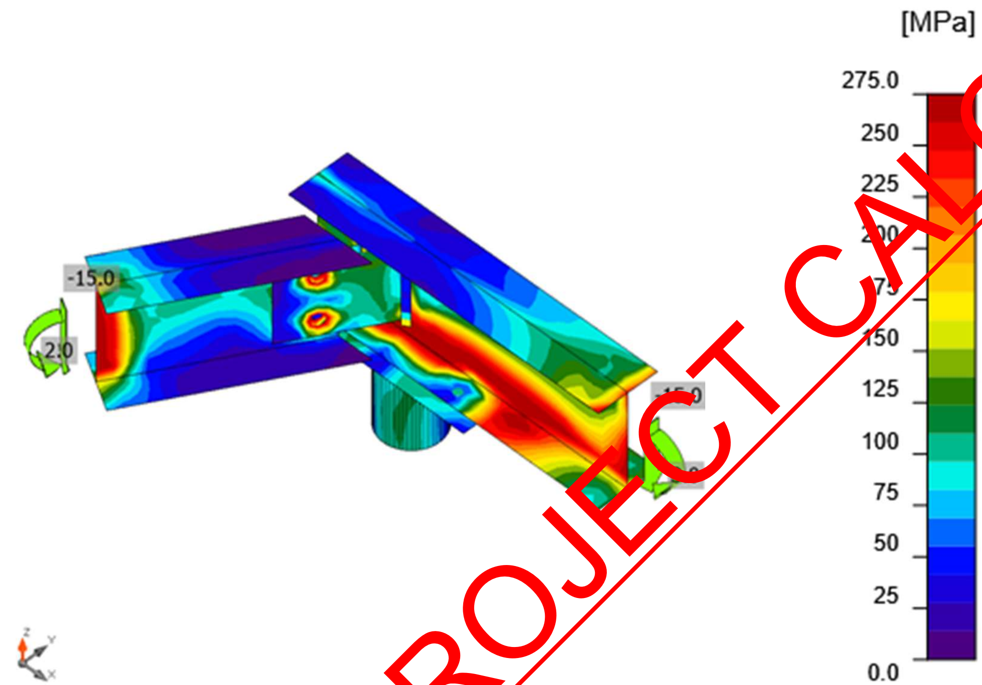

Equivalent stress, LE1

Bolts

	Name	Grade	Loads	$F_{t,Ed}$ [kN]	V [kN]	Ut_t [%]	$F_{b,Rd}$ [kN]	Ut_s [%]	Ut_{ts} [%]	Status
	B1	M12 8.8 - 1	LE1	10.1	0.2	20.9	79.5	0.6	15.5	OK
	B2	M12 8.8 - 1	LE1	0.3	0.6	0.6	79.5	1.9	2.4	OK
	B3	M12 8.8 - 1	LE1	26.0	1.2	53.7	79.5	3.6	42.0	OK
	B4	M12 8.8 - 1	LE1	3.8	0.4	7.9	57.0	1.4	7.0	OK
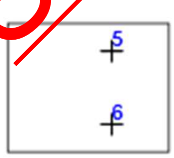	B5	M16 8.8 - 2	LE1	12.2	22.9	16.8	42.1	54.5	47.7	OK
	B6	M16 8.8 - 2	LE1	8.5	21.8	11.6	61.9	36.2	42.9	OK

Design data

Name	$F_{t,Rd}$	$B_{p,Rd}$	$F_{v,Rd}$

	[kN]	[kN]	[kN]
M12 8.8 - 1	48.4	99.9	32.3
M16 8.8 - 2	90.4	72.9	60.3

Detailed result for B5

Tension resistance check (EN 1993-1-8 tab 3.4)

$F_{t,Rd} = \frac{k_2 f_{ub} A_s}{\gamma_{M2}} =$ 90.4 kN ≥ $F_t =$ 12.2 kN

where:

$k_2 = 0.90$ – Factor

$f_{ub} = 800.0$ MPa – Ultimate tensile strength of the bolt

$A_s = 157$ mm^2 – Tensile stress area of the bolt

$\gamma_{M2} = 1.25$ – Safety factor

Punching resistance check (EN 1993-1-8 tab 3.4)

$B_{p,Rd} = \frac{0.6 \pi d_m t_p f_u}{\gamma_{M2}} =$ 72.9 kN ≥ $F_t =$ 12.2 kN

where:

$d_m = 25$ mm – The mean of the across points and across flats dimensions of the bolt head or the nut, whichever is smaller

$t_p = 5$ mm – Thickness

$f_u = 430.0$ MPa – Ultimate strength

$\gamma_{M2} = 1.25$ – Safety factor

Shear resistance check (EN 1993-1-8 tab 3.4)

$F_{v,Rd} = \frac{\beta_p \alpha_v f_{ub} A}{\gamma_{M2}} =$ 60.3 kN ≥ $V =$ 22.9 kN

where:

$\beta_p = 1.00$ – Reducing factor

$\alpha_v = 0.60$ – Reducing factor

$f_{ub} = 800.0$ MPa – Ultimate tensile strength of the bolt

$A = 157$ mm^2 – Tensile stress area of the bolt

$\gamma_{M2} = 1.25$ – Safety factor

Bearing resistance check (EN 1993-1-8 tab 3.4)

$F_{b,Rd} = \frac{k_1 \alpha_b f_u d t}{\gamma_{M2}} =$ 42.1 kN ≥ $V =$ 22.9 kN

where:

$k_1 = \min(2.8\frac{e_2}{d_0} - 1.7, 1.4\frac{p_2}{d_0} - 1.7, 2.5) = 2.50$ – Factor for edge distance and bolt spacing perpendicular to the direction of load transfer

$\alpha_b = \min(\frac{e_1}{3d_0}, \frac{p_1}{3d_0} - \frac{1}{4}, \frac{f_{ub}}{f_u}, 1) = 0.68$ – Factor for end distance and bolt spacing in direction of load transfer

$e_2 = 40$ mm – Distance to the plate edge perpendicular to the shear force

$p_2 = \infty$ mm – Distance between bolts perpendicular to the shear force

$d_0 = 18$ mm – Bolt hole diameter

$e_1 = 37$ mm – Distance to the plate edge in the direction of the shear force

$p_1 = \infty$ mm – Distance between bolts in the direction of the shear force

$f_{ub} = 800.0$ MPa – Ultimate tensile strength of the bolt

$f_u = 430.0$ MPa – Ultimate strength

$d = 16$ mm – Nominal diameter of the fastener

$t = 5$ mm – Thickness of the plate

$\gamma_{M2} = 1.25$ – Safety factor

Interaction of tension and shear (EN 1993-1-8 tab 3.4)

$$U_{tts} = \frac{F_{v,Ed}}{F_{v,Rd}} + \frac{F_{t,Ed}}{1.4F_{t,Rd}} = 47.7\ \%$$

Utilization in tension

$$U_{tt} = \frac{F_{t,Ed}}{\min(F_{t,Rd}; B_{p,Rd})} = 16.8\ \%$$

Utilization in shear

$$U_{ts} = \frac{V_{Ed}}{\min(F_{v,Rd}; F_{b,Rd})} = 54.5\ \%$$

Welds (Plastic redistribution)

Item	Edge	Throat th. [mm]	Length [mm]	Loads	$\sigma_{w,Ed}$ [MPa]	ε_{Pl} [%]	$\sigma_\perp$ [MPa]	$\tau_{\parallel}$ [MPa]	$\tau_\perp$ [MPa]	Ut [%]	Ut_c [%]	Status
EP1	C	◢8.5	263	LE1	108.9	0.0	-57.2	-4.4	53.3	26.9	13.8	OK
B-bfl 1	STIFF 1	◢6.5◣	42	LE1	221.9	0.0	103.8	84.1	75.8	54.8	44.5	OK
		◢6.5◣	42	LE1	216.5	0.0	86.4	-10.6	-114.2	53.5	37.4	OK
B-w 1	STIFF 1	◢6.5◣	137	LE1	261.2	0.0	-93.1	43.4	-134.1	64.6	19.7	OK
		◢6.5◣	137	LE1	206.9	0.0	-80.6	-102.5	40.0	51.1	21.1	OK
B-tfl 1	STIFF 1	◢6.5◣	42	LE1	55.6	0.0	-3.5	31.9	2.4	13.7	10.7	OK

		◢6.5 ◣	42	LE1	38.8	0.0	1.7	-22.0	4.1	9.6	6.6	OK
B-w 1	FP2	◢8.5 ◣	112	LE1	189.8	0.0	-16.6	57.6	-92.8	46.9	19.0	OK
		◢8.5 ◣	112	LE1	173.0	0.0	-70.5	-74.0	53.3	42.7	15.8	OK

Design data

	β_w [-]	$\sigma_{w,Rd}$ [MPa]	0.9 σ [MPa]
S 275	0.85	404.7	309.6

Detailed result for B-w 1 STIFF1

Weld resistance check (EN 1993-1-8 4.5.3.2)

$\sigma_{w,Rd} = f_u/(\beta_w \gamma_{M2}) =$ 404.7 MPa $\geq$ $\sigma_{w,Ed} = [\sigma_\perp^2 + 3(\tau_\perp^2 + \tau_\parallel^2)]^{0.5} =$ 261.2 MPa

$\sigma_{\perp,Rd} = 0.9 f_u/\gamma_{M2} =$ 309.6 MPa $\geq$ $|\sigma_\perp| =$ 93.1 MPa

where:

$f_u =$ 430.0 MPa – Ultimate strength

$\beta_w = 0.85$ – appropriate correlation factor taken from Table 4.1

$\gamma_{M2} = 1.25$ – Safety factor

Stress utilization

$U_t = \max(\frac{\sigma_{w,Ed}}{\sigma_{w,Rd}}; \frac{|\sigma_\perp|}{\sigma_{\perp,Rd}}) =$ 64.6 %

Buckling

Loads	Shape	Factor [-]
LE1	1	33.49
	2	38.05
	3	47.00
	4	52.41
	5	68.12
	6	73.64

Bill of material

Manufacturing operations

Name	Plates [mm]	Shape	Nr.	Welds [mm]	Length [mm]	Bolts	Nr.
EP1	P15.0x112.9-268.9 (S 275)		1	Fillet: a = 8.5	263.5	M12 8.8	4
STIFF1	P10.0x42.1-137.0 (S 275)		1	Double fillet: a = 6.5	221.2		
FP2	P15.0x141.2-112.4 (S 275)	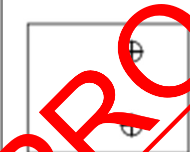	1	Double fillet: a = 8.5	112.4	M16 8.8	2
CUT1							

Welds

Type	Material	Throat thickness [mm]	Leg size [mm]	Length [mm]
Fillet	S 275	8.5	12.0	263.5
Double fillet	S 275	6.5	9.2	221.2
Double fillet	S 275	8.5	12.0	112.4

Bolts

Name	Grip length [mm]	Count
M12 8.8	23	4
M16 8.8	20	2

PEPP — PEARL ENGINEERS, PLANNERS & PROJECT MANAGERS			
02 TOWERFIELDS WESTERHAM ROAD BROMLEY, BR2 6HF Email: info@Pearlepp.co.uk Website: www. pearlepp.co.uk Tel no. 02035763199	**Project:** 68 GROVE PARK RD UK		**Sheet No./Rev.** 405
	Job Ref. 2024-06-	**Structural Engineer** **MM**	**Date** **11/06/2024**

Drawing

EP1

P15.0x269-113 (S 275)

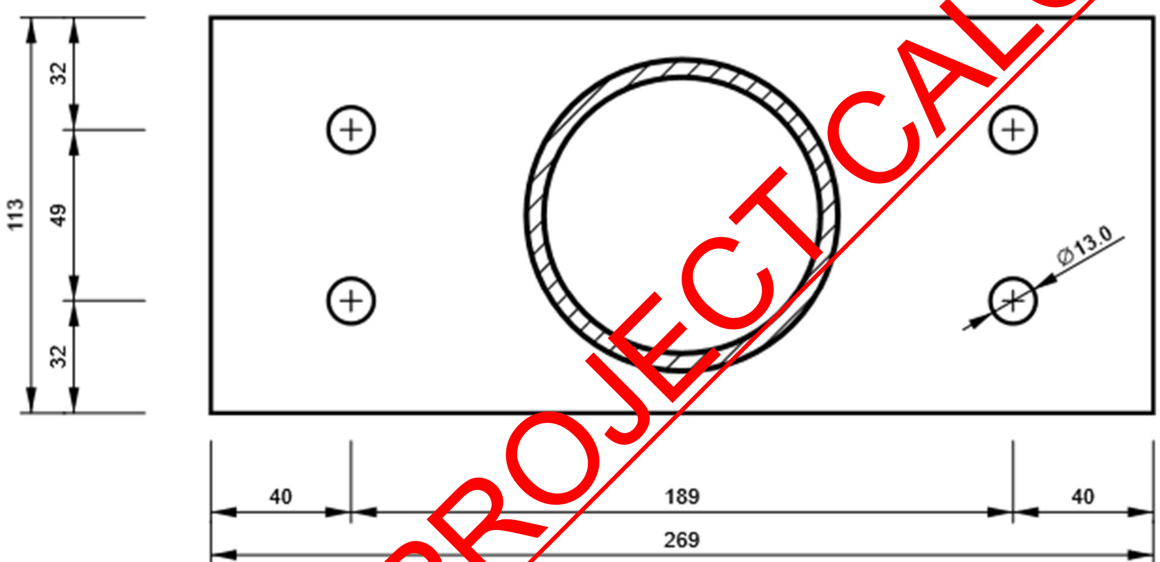

STIFF1

P10.0x137-42 (S 275)

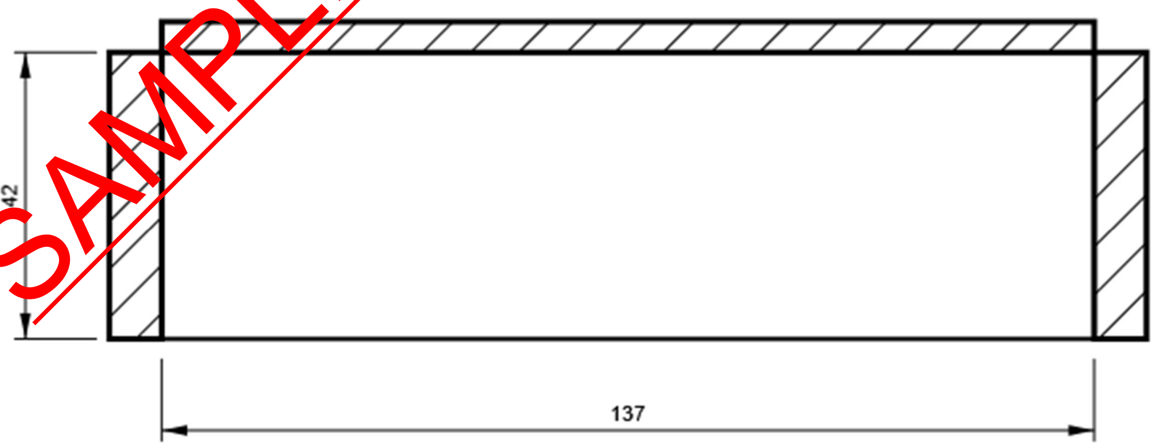

FP2

P15.0x112-141 (S 275)

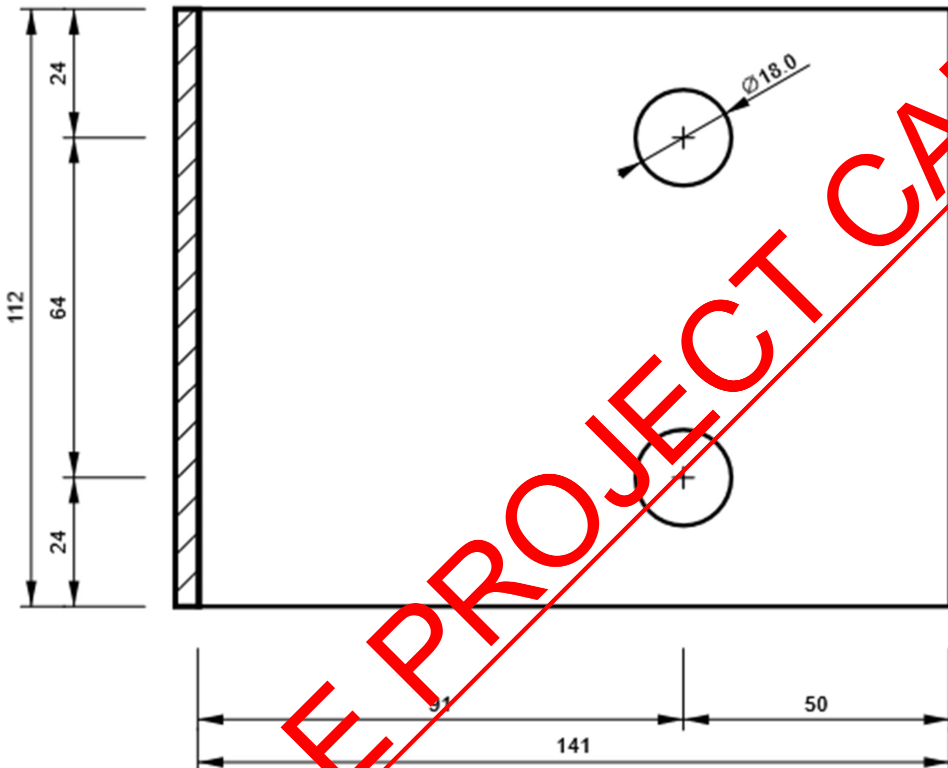

B, UB 152 x 89 x 16 - Bottom flange 1:

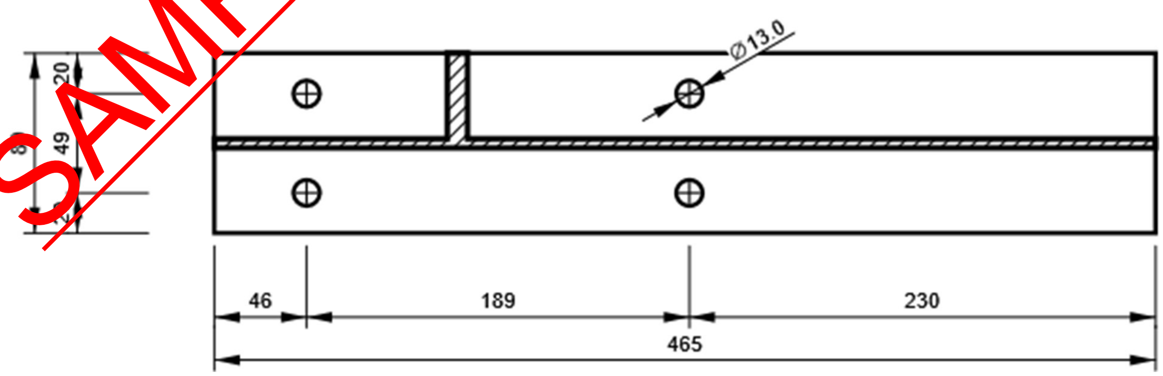

M3, UB 152 x 89 x 16 - Web 1:

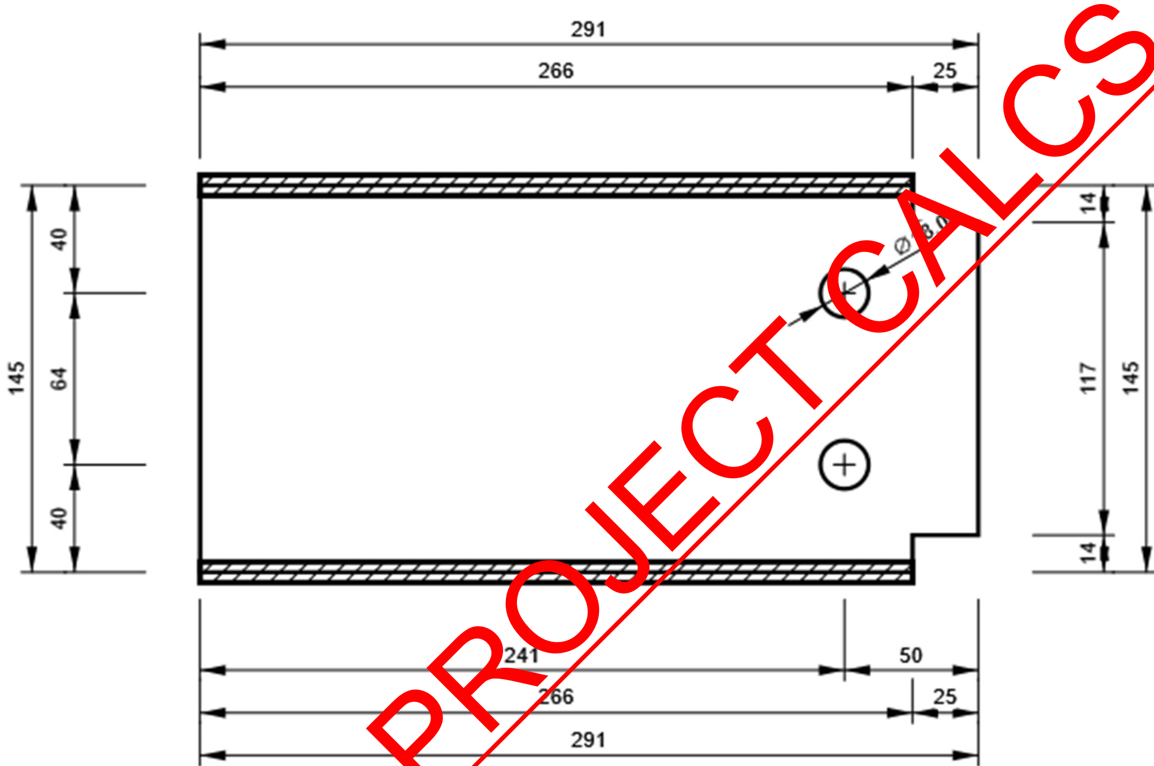

- **Connection-16**

Project data

Project name	
Project number	
Author	
Description	
Date	
Design code	EN

Material

Steel	S 275

Project item CON16

Design

Name	CON16
Description	
Analysis	Stress, strain/ simplified loading

Beams and columns

Name	Cross-section	β – Direction [°]	γ - Pitch [°]	α - Rotation [°]	Offset ex [mm]	Offset ey [mm]	Offset ez [mm]	Forces in	X [mm]
C	3 - SHS100/100/10.0	0.0	-90.0	0.0	0	0	0	Bolts	0
B	2 - UC 203 x 203 x 46	0.0	0.0	0.0	0	0	0	Bolts	0
M3	4 - UC 152 x 152 x 23	-90.0	0.0	0.0	0	30	25	Bolts	51

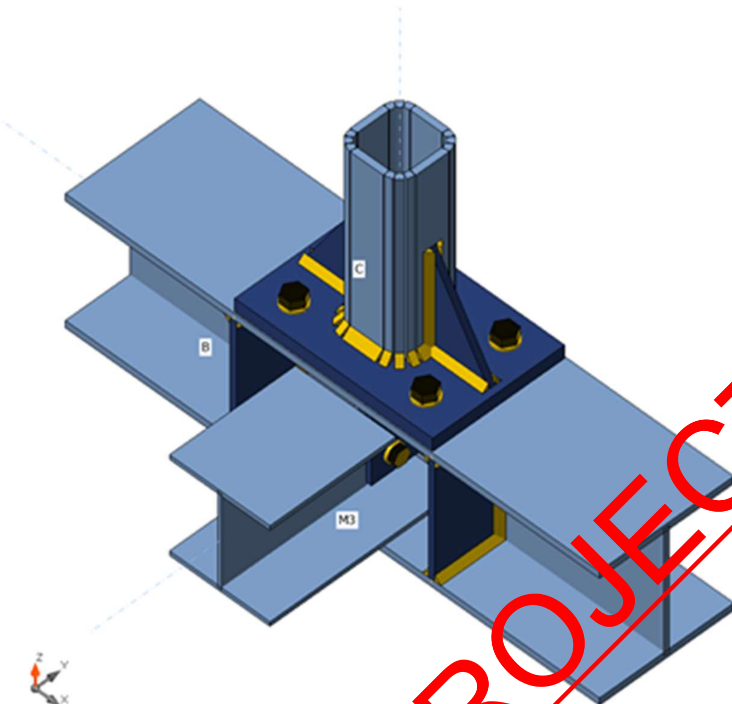

C
B
M3

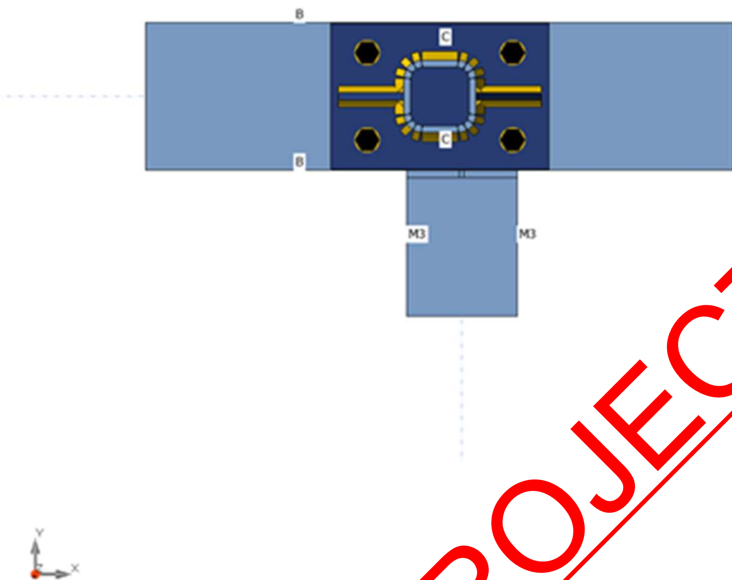
B
C
C
B
M3
M3
Y
X

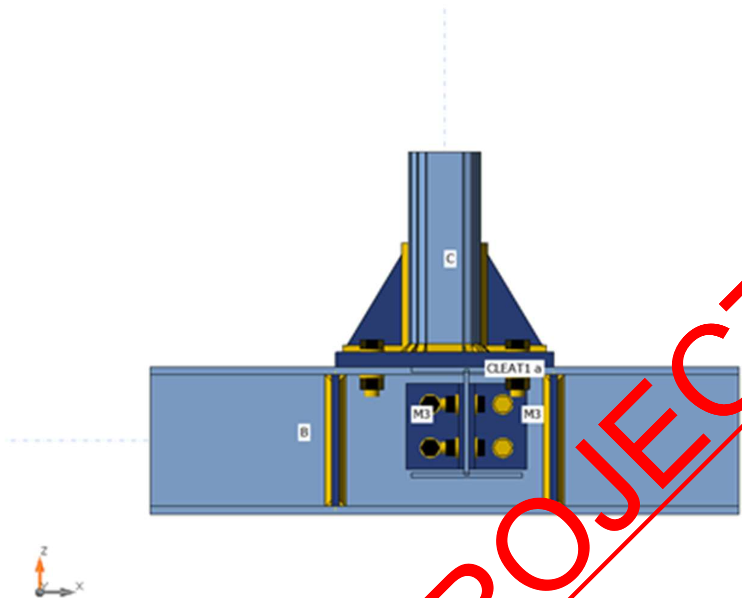

C
CLEAT1 a
M3
M3
B
z
x

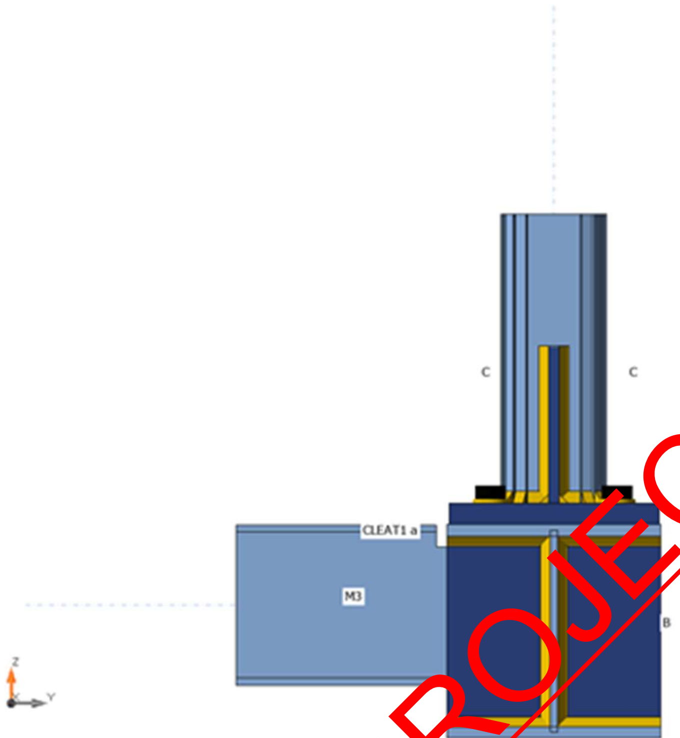

Cross-sections

Name	Material
3 - SHS100/100/10.0	S 275
2 - UC 203 x 203 x 46	S 275
4 - UC 152 x 152 x 23	S 275
5 - L80X8	S 275

Cross-sections

Name	Material	Drawing

3 - SHS100/100/10.0	S 275	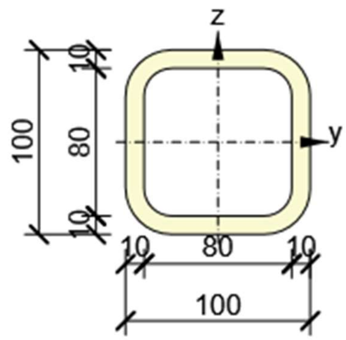
2 - UC 203 x 203 x 46	S 275	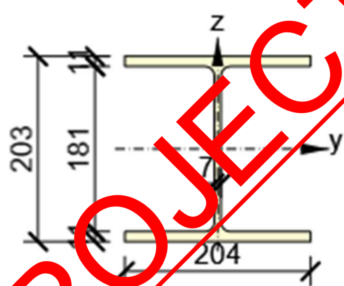
4 - UC 152 x 152 x 23	S 275	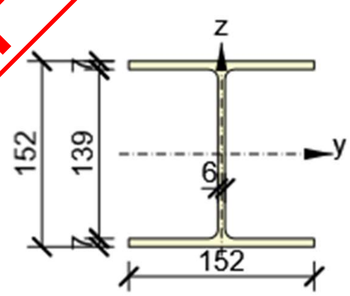
5 - L80X8	S 275	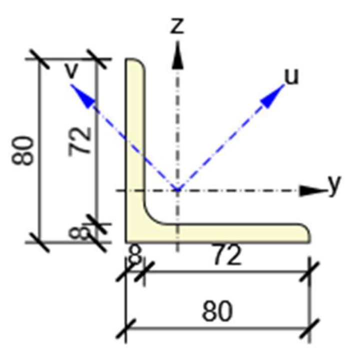

Bolts

Name	Bolt assembly	Diameter [mm]	fu [MPa]	Gross area [mm^2]
M20 8.8	M20 8.8	20	800.0	314
M16 8.8	M16 8.8	16	800.0	201

Load effects (equilibrium not required)

Name	Member	N [kN]	Vy [kN]	Vz [kN]	Mx [kNm]	My [kNm]	Mz [kNm]
LE1	C	-30.0	0.0	0.0	5.0	5.0	5.0
	M3	0.0	0.0	-30.0	0.0	0.0	0.0

Check

Summary

Name	Value	Status
Analysis	100.0%	OK
Plates	0.0 < 5.0%	OK
Bolts	32.8 < 100%	OK
Welds	42.9 < 100%	OK
Buckling	40.02	

Plates

Name	Thickness [mm]	Loads	σ_{Ed} [MPa]	ε_{Pl} [%]	σc_{Ed} [MPa]	Status
C	10.0	LE1	145.4	0.0	0.0	OK
B-bfl 1	11.0	LE1	91.4	0.0	0.0	OK
B-tfl 1	11.0	LE1	236.3	0.0	27.0	OK
B-w 1	7.2	LE1	269.3	0.0	169.1	OK
M3-bfl 1	6.8	LE1	48.6	0.0	0.0	OK
M3-tfl 1	6.8	LE1	50.0	0.0	0.0	OK
M3-w 1	5.8	LE1	159.1	0.0	39.0	OK
CLEAT1 a-bfl 1	8.0	LE1	257.6	0.0	169.1	OK
CLEAT1 a-w 1	8.0	LE1	215.4	0.0	169.1	OK
CLEAT1 b-bfl 1	8.0	LE1	254.7	0.0	160.2	OK
CLEAT1 b-w 1	8.0	LE1	207.2	0.0	160.2	OK
EP1	20.0	LE1	151.2	0.0	27.0	OK
RIB1	10.0	LE1	82.1	0.0	0.0	OK
RIB2	10.0	LE1	206.9	0.0	0.0	OK
STIFF1a	10.0	LE1	127.3	0.0	0.0	OK
STIFF1b	10.0	LE1	133.9	0.0	0.0	OK

STIFF1c	10.0	LE1	130.9	0.0	0.0	OK
STIFF1d	10.0	LE1	98.6	0.0	0.0	OK

Design data

Material	f_y [MPa]	ε_{lim} [%]
S 275	275.0	5.0

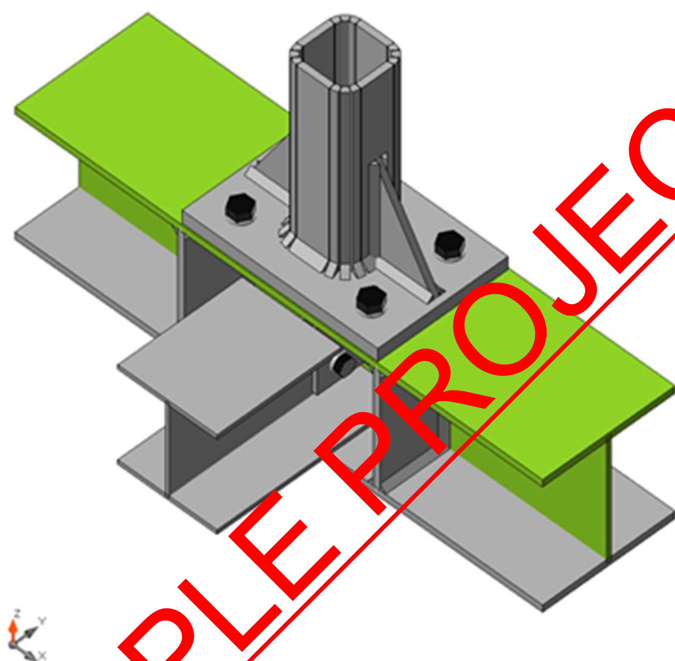

Overall check, LE1

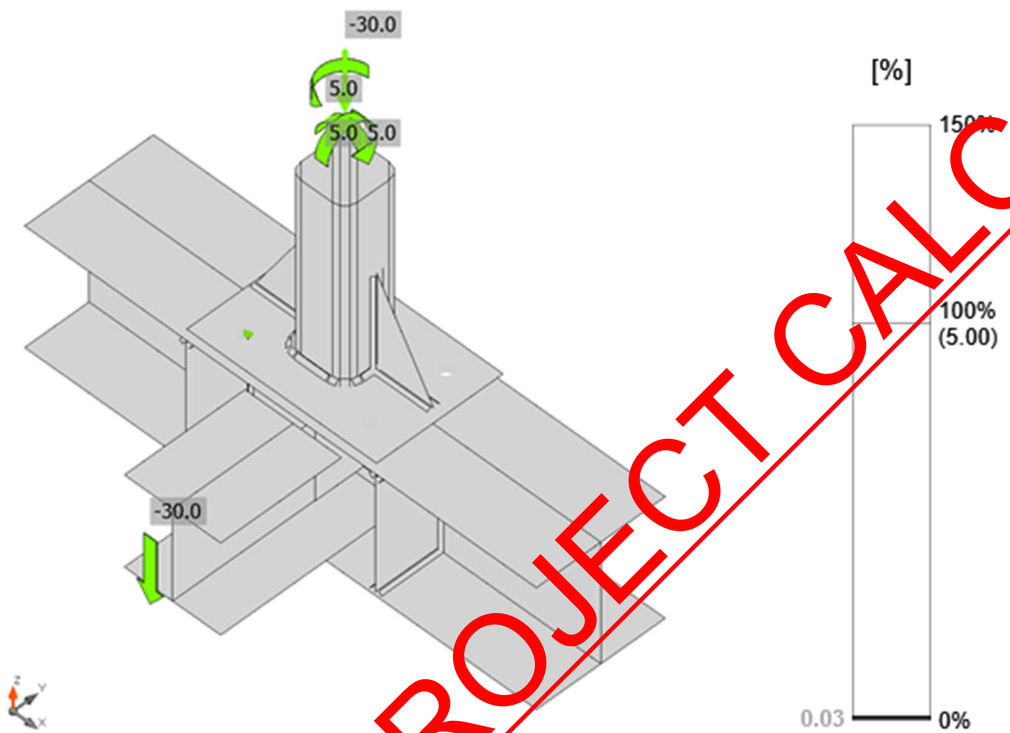

Strain check, LE1

PEPP PEARL ENGINEERS, PLANNERS & PROJECT MANAGERS 02 TOWERFIELDS WESTERHAM ROAD BROMLEY, BR2 6HF Email: info@Pearlepp.co.uk Website: www. pearlepp.co.uk Tel no. 02035763199	**Project:** 68 GROVE PARK RD UK		**Sheet No./Rev.** 417
	Job Ref. 2024-06-	**Structural Engineer** **MM**	**Date** **11/06/2024**

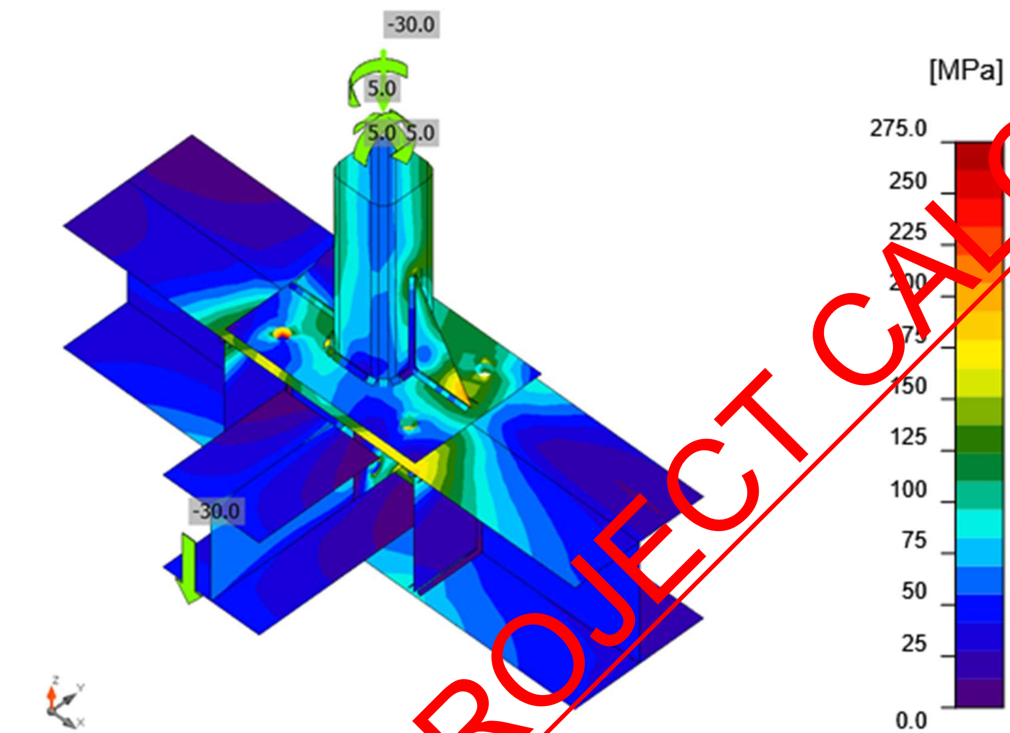

Equivalent stress, LE1

Bolts

	Name	Grade	Loads	$F_{t,Ed}$ [kN]	V [kN]	Ut_t [%]	$F_{b,Rd}$ [kN]	Ut_s [%]	Ut_{ts} [%]	Status
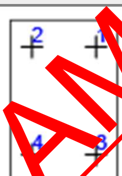	B1	M20 8.8 - 1	LE1	3.8	12.9	2.7	189.2	13.7	15.6	OK
	B2	M20 8.8 - 1	LE1	25.6	11.0	18.2	120.3	11.7	24.7	OK
	B3	M20 8.8 - 1	LE1	1.2	9.4	0.8	119.8	9.9	10.5	OK
	B4	M20 8.8 - 1	LE1	15.2	10.5	10.7	189.2	11.1	18.8	OK
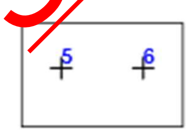	B5	M16 8.8 - 2	LE1	8.6	7.6	9.5	68.7	22.0	19.4	OK
	B6	M16 8.8 - 2	LE1	5.7	7.4	6.3	45.2	32.8	16.8	OK
	B7	M16 8.8 - 3	LE1	5.5	8.7	6.1	99.1	14.4	18.7	OK

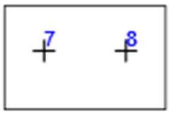	B8	M16 8.8 - 3	LE1	17.3	7.7	19.1	59.1	13.0	26.4	OK
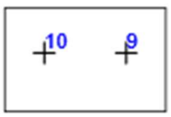	B9	M16 8.8 - 3	LE1	5.8	8.6	6.4	99.0	14.3	18.8	OK
	B10	M16 8.8 - 3	LE1	17.9	7.8	19.8	59.1	13.[illegible]	27.1	OK

Design data

Name	$F_{t,Rd}$ [kN]	$B_{p,Rd}$ [kN]	$F_{v,Rd}$ [kN]
M20 8.8 - 1	141.1	224.7	94.1
M16 8.8 - 2	90.4	129.7	60.3
M16 8.8 - 3	90.4	116.7	60.3

Detailed result for B6

Tension resistance check (EN 1993-1-8 tab 3.4)

$F_{t,Rd} = \frac{k_2 f_{ub} A_s}{\gamma_{M2}} =$ 90.4 kN ≥ $F_t =$ 5.7 kN

where:

$k_2 = 0.90$ – Factor

$f_{ub} = 800.0$ MPa – Ultimate tensile strength of the bolt

$A_s = 157$ mm^2 – Tensile stress area of the bolt

$\gamma_{M2} = 1.25$ – Safety factor

Punching resistance check (EN 1993-1-8 tab 3.4)

$B_{p,Rd} = \frac{0.6 \pi d_m t_p f_u}{\gamma_{M2}} =$ 129.7 kN ≥ $F_t =$ 5.7 kN

where:

$d_m = 25$ mm – The mean of the across points and across flats dimensions of the bolt head or the nut, whichever is smaller

$t_p = 8$ mm – Thickness

$f_u = 430.0$ MPa – Ultimate strength

$\gamma_{M2} = 1.25$ – Safety factor

Shear resistance check (EN 1993-1-8 tab 3.4)

PEPP
PEARL ENGINEERS, PLANNERS & PROJECT MANAGERS
02 TOWERFIELDS WESTERHAM ROAD
BROMLEY, BR2 6HF
Email: info@Pearlepp.co.uk
Website: www. pearlepp.co.uk
Tel no. 02035763199

$F_{v,Rd} = \frac{\beta_p \alpha_v f_{ub} A}{\gamma_{M2}} =$ 60.3 kN ≥ $V =$ 7.4 kN

where:

$\beta_p = 1.00$ – Reducing factor

$\alpha_v = 0.60$ – Reducing factor

$f_{ub} = 800.0$ MPa – Ultimate tensile strength of the bolt

$A = 157$ mm^2 – Tensile stress area of the bolt

$\gamma_{M2} = 1.25$ – Safety factor

Bearing resistance check (EN 1993-1-8 tab 3.4)

$F_{b,Rd} = \frac{k_1 \alpha_b f_u d t}{\gamma_{M2}} =$ 45.2 kN ≥ $V =$ 14.8 kN

where:

$k_1 = \min(2.8\frac{e_2}{d_0} - 1.7, 1.4\frac{p_2}{d_0} - 1.7, 2.5) = 2.50$ – Factor for edge distance and bolt spacing perpendicular to the direction of load transfer

$\alpha_b = \min(\frac{e_1}{3d_0}, \frac{p_1}{3d_0} - \frac{1}{4}, \frac{f_{ub}}{f_u}, 1) = 0.57$ – Factor for end distance and bolt spacing in direction of load transfer

$e_2 = 37$ mm – Distance to the plate edge perpendicular to the shear force

$p_2 = \infty$ mm – Distance between bolts perpendicular to the shear force

$d_0 = 18$ mm – Bolt hole diameter

$e_1 = 31$ mm – Distance to the plate edge in the direction of the shear force

$p_1 = \infty$ mm – Distance between bolts in the direction of the shear force

$f_{ub} = 800.0$ MPa – Ultimate tensile strength of the bolt

$f_u = 430.0$ MPa – Ultimate strength

$d = 16$ mm – Nominal diameter of the fastener

$t = 6$ mm – Thickness of the plate

$\gamma_{M2} = 1.25$ – Safety factor

Interaction of tension and shear (EN 1993-1-8 tab 3.4)

$U_{tts} = \frac{F_{v,Ed}}{F_{v,Rd}} + \frac{F_{t,Ed}}{1.4F_{t,Rd}} =$ 16.8 %

Utilization in tension

$U_{tt} = \frac{F_{t,Ed}}{\min(F_{t,Rd}; B_{p,Rd})} =$ 6.3 %

Utilization in shear

$U_{ts} = \frac{V_{Ed}}{\min(F_{v,Rd}; F_{b,Rd})} =$ 32.8 %

PEPP PEARL ENGINEERS, PLANNERS & PROJECT MANAGERS 02 TOWERFIELDS WESTERHAM ROAD BROMLEY, BR2 6HF Email: info@Pearlepp.co.uk Website: www. pearlepp.co.uk Tel no. 02035763199	**Project:** 68 GROVE PARK RD UK		**Sheet No./Rev.** 420
	Job Ref. 2024-06-	**Structural Engineer** **MM**	**Date** **11/06/2024**

Welds (Plastic redistribution)

Item	Edge	Throat th. [mm]	Length [mm]	Loads	$\sigma_{w,Ed}$ [MPa]	ε_{Pl} [%]	$\sigma_{\perp}$ [MPa]	$\tau_{\|\|}$ [MPa]	$\tau_{\perp}$ [MPa]	Ut [%]	Ut_c [%]	Status
EP1	C	◢8.5	324	LE1	173.5	0.0	-102.0	70.2	40.5	42.9	24.0	OK
EP1	RIB1	◢6.5 ◣	90	LE1	94.2	0.0	-2.7	54.3	3.0	23.3	18.5	OK
		◢6.5 ◣	90	LE1	107.4	0.0	16.4	60.2	-11.5	2[illegible].5	20.3	OK
C-w 3	RIB1	◢6.5 ◣	150	LE1	31.0	0.0	2.9	16.[illegible]	6.1	7.7	2.7	OK
		◢6.5 ◣	150	LE1	37.2	0.0	5.7	-21.1	-2.5	9.2	4.4	OK
EP1	RIB2	◢6.5 ◣	90	LE1	92.9	0.0	5.0	-5[illegible].6	-1.0	23.0	18.7	OK
		◢6.5 ◣	90	LE1	169.9	0.0	42.4	-88.9	33.4	42.0	32.6	OK
C-w 1	RIB2	◢6.5 ◣	150	LE1	83.[illegible]	0.0	-13.5	-47.4	-6.2	20.7	12.0	OK
		◢6.5 ◣	150	LE1	74.9	0.0	-7.7	40.3	15.0	18.5	5.8	OK
B-bfl 1	STIFF1a	◢6.5 ◣	98	LE1	15.9	0.0	9.4	-3.5	6.5	3.9	3.0	OK
		◢6.5 ◣	98	LE1	12.4	0.0	-8.1	1.5	5.2	3.1	2.6	OK
B-w 1	STIFF1a	◢6.5 ◣	181	LE1	19.9	0.0	9.7	8.4	-5.5	4.9	2.3	OK
		◢6.5 ◣	181	LE1	24.5	0.0	-3.4	-7.5	-11.8	6.1	4.9	OK
B-tfl 1	STIFF1a	◢6.5 ◣	98	LE1	87.5	0.0	-50.7	-28.8	-29.4	21.6	14.3	OK
		◢6.5 ◣	98	LE1	47.6	0.0	4.1	-27.3	1.2	11.8	9.8	OK
B-bfl 1	STIFF1b	◢6.5 ◣	98	LE1	18.2	0.0	9.7	6.3	6.3	4.5	2.7	OK
		◢6.5 ◣	98	LE1	15.6	0.0	-6.9	-7.2	3.5	3.8	3.0	OK
B-w 1	STIFF1b	◢6.5 ◣	181	LE1	25.6	0.0	0.7	-14.7	1.4	6.3	5.4	OK
		◢6.5 ◣	181	LE1	21.8	0.0	-7.6	9.8	6.5	5.4	2.9	OK
B-tfl 1	STIFF1b	◢6.5 ◣	98	LE1	59.5	0.0	-7.1	-34.0	1.4	14.7	11.6	OK
		◢6.5 ◣	98	LE1	95.4	0.0	32.3	-46.0	-23.8	23.6	18.3	OK
B-bfl 1	STIFF1c	◢6.5 ◣	98	LE1	13.8	0.0	-5.7	-5.9	-4.2	3.4	2.9	OK

PEPP
PEARL ENGINEERS, PLANNERS & PROJECT MANAGERS
02 TOWERFIELDS WESTERHAM ROAD
BROMLEY, BR2 6HF
Email: info@Pearlepp.co.uk
Website: www. pearlepp.co.uk
Tel no. 02035763199

		◢6.5 ◣	98	LE1	15.2	0.0	4.9	7.6	-3.4	3.8	3.1	OK
B-w 1	STIFF1 c	◢6.5 ◣	181	LE1	29.5	0.0	-4.9	12.6	11.1	7.3	6.1	OK
		◢6.5 ◣	181	LE1	26.8	0.0	11.8	-11.1	-8.3	6.6	4.7	OK
B-tfl 1	STIFF1 c	◢6.5 ◣	98	LE1	49.3	0.0	-3.3	26.4	-10.4	12.2	9.2	OK
		◢6.5 ◣	98	LE1	87.5	0.0	-50.7	28.0	30.2	21.0	17.6	OK
B-bfl 1	STIFF1 d	◢6.5 ◣	98	LE1	13.9	0.0	-4.4	7.4	-1.8	3.4	3.0	OK
		◢6.5 ◣	98	LE1	16.2	0.0	7.9	-0.2	-5.3	4.0	2.3	OK
B-w 1	STIFF1 d	◢6.5 ◣	181	LE1	20.4	0.0	-4.9	-10.4	-4.7	5.0	2.6	OK
		◢6.5 ◣	181	LE1	18.4	0.0	8.0	5.4	-7.9	4.5	3.7	OK
B-tfl 1	STIFF1 d	◢6.5 ◣	98	LE1	68.1	0.0	18.4	34.9	14.7	16.8	14.2	OK
		◢6.5 ◣	98	LE1	50.7	0.0	-5.7	29.0	2.0	12.5	9.7	OK

Design data

	β_w [-]	$\sigma_{w,Rd}$ [MPa]	0.9 σ [MPa]
S 275	0.85	404.7	309.6

Detailed result for EP1 C

Weld resistance check (EN 1993-1-8 4.5.3.2)

$\sigma_{w,Rd} = f_u/(\beta_w \gamma_{M2}) =$ 404.7 MPa $\geq$ $\sigma_{w,Ed} = [\sigma_\perp^2 + 3(\tau_\perp^2 + \tau_\parallel^2)]^{0.5} =$ 173.5 MPa

$\sigma_{\perp,Rd} = 0.9 f_u/\gamma_{M2} =$ 309.6 MPa $\geq$ $|\sigma_\perp| =$ 102.0 MPa

where:

$f_u =$ 430.0 MPa – Ultimate strength

$\beta_w =$ 0.85 – appropriate correlation factor taken from Table 4.1

$\gamma_{M2} =$ 1.25 – Safety factor

Stress utilization

$U_t = \max(\frac{\sigma_{w,Ed}}{\sigma_{w,Rd}}; \frac{|\sigma_\perp|}{\sigma_{\perp,Rd}}) =$ 42.9 %

Buckling

Loads	Shape	Factor [-]
LE1	1	40.02
	2	46.62
	3	58.62
	4	73.15
	5	87.23
	6	90.03

Bill of material

Manufacturing operations

Name	Plates [mm]	Shape	Nr.	Welds [mm]	Length [mm]	Bolts	Nr.
EP1	P20.0x200.0-300.0 (S 275)		1	Fillet: a = 8.5	324.2	M20 8.8	4
RIB1	P10.0x90.0-150.0 (S 275)	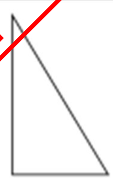	1	Double fillet: a = 6.5	240.0		
RIB2	P10.0x90.0-150.0 (S 275)		1	Double fillet: a = 6.5	240.0		
STIFF1	P10.0x98.2-181.2 (S 275)		4	Double fillet: a = 6.5	1510.4		
CUT1							

Welds

Type	Material	Throat thickness [mm]	Leg size [mm]	Length [mm]
Fillet	S 275	8.5	12.0	324.2
Double fillet	S 275	6.5	9.2	1990.4

Bolts

Name	Grip length [mm]	Count
M20 8.8	31	4
M16 8.8	22	2
M16 8.8	15	4

Drawing

EP1

P20.0x300-200 (S 275)

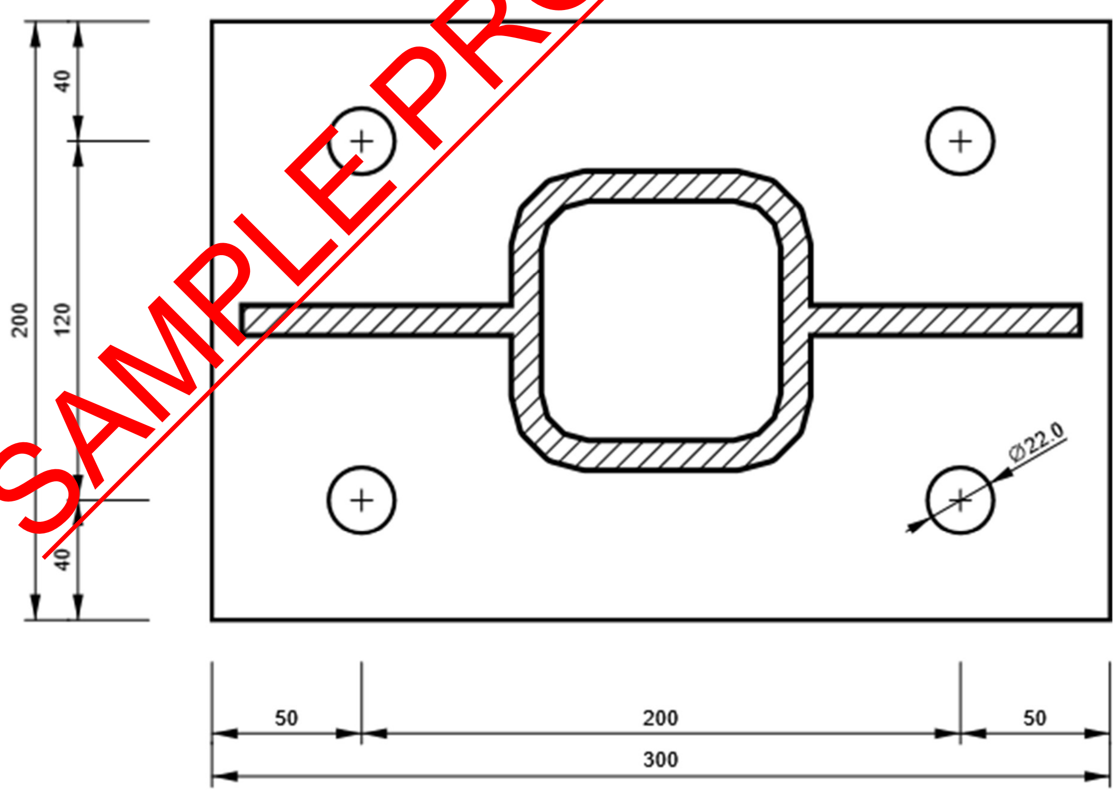

RIB1

P10.0x150-90 (S 275)

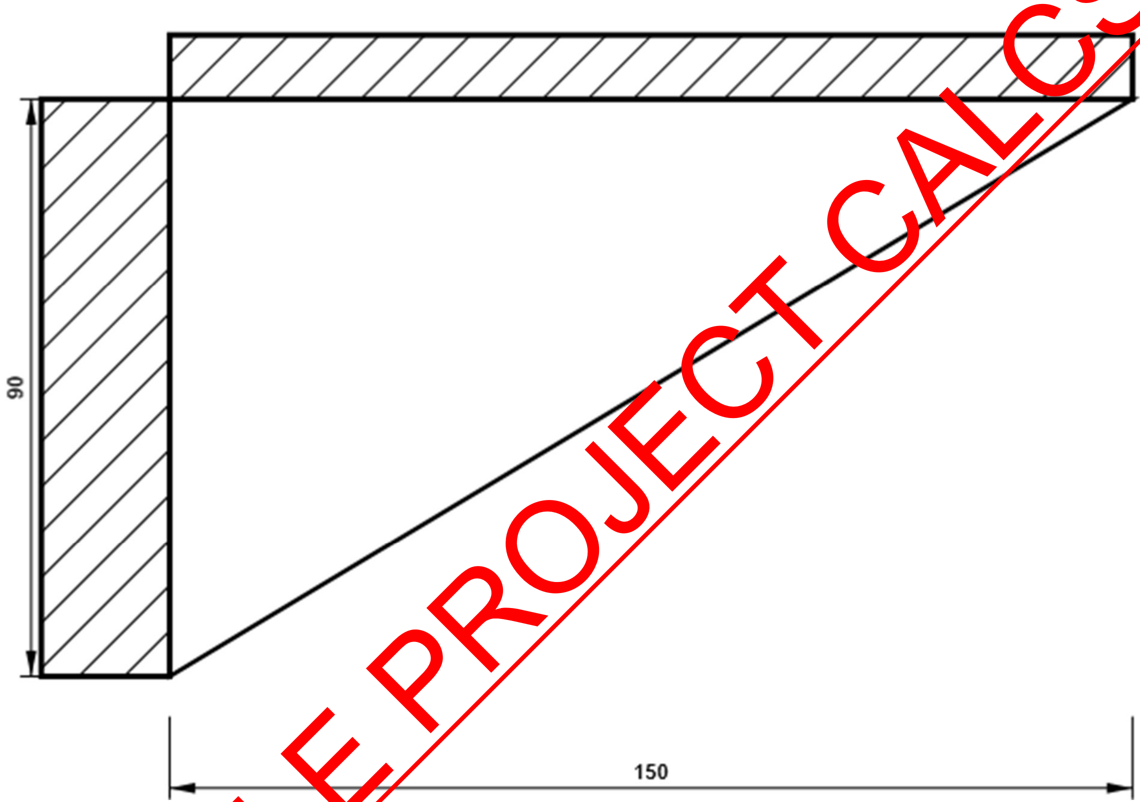

RIB2

P10.0x150-90 (S 275)

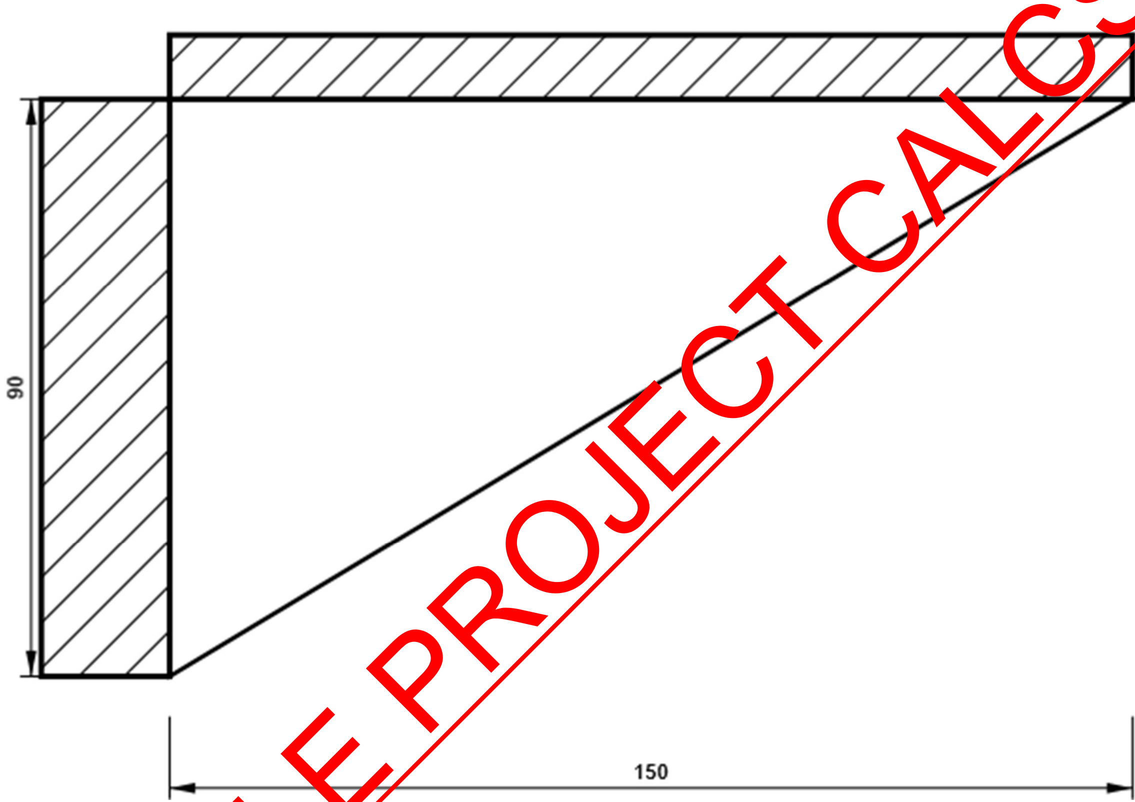

STIFF1

P10.0x181-98 (S 275)

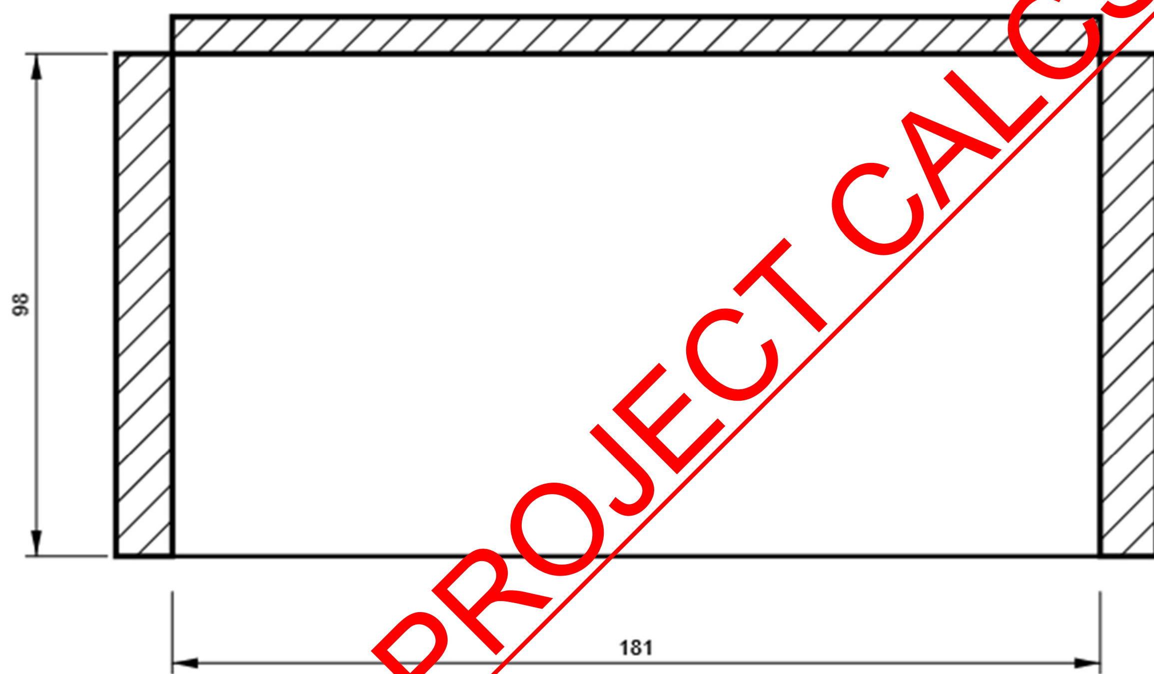

B, UC 203 x 203 x 46 - Top flange 1:

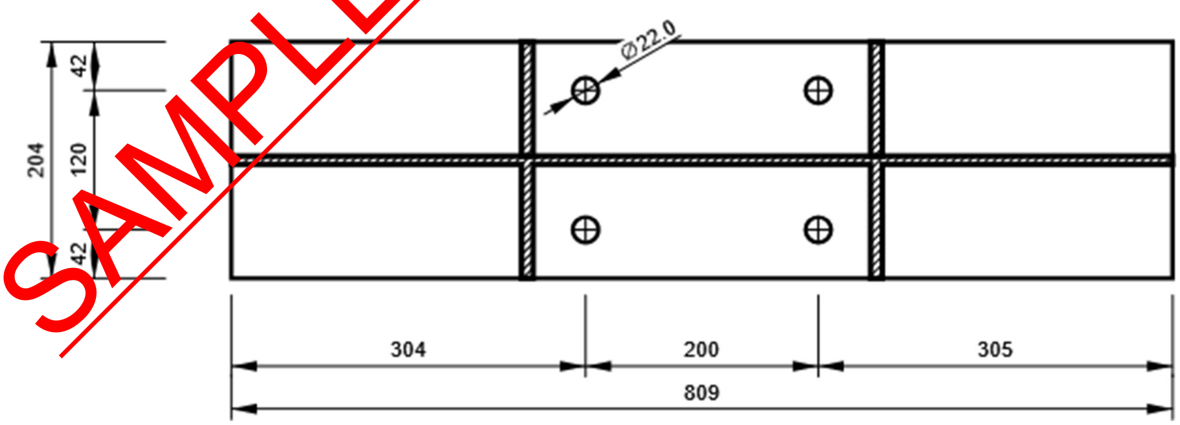

PEPP
PEARL ENGINEERS, PLANNERS & PROJECT MANAGERS
02 TOWERFIELDS WESTERHAM ROAD
BROMLEY, BR2 6HF
Email: info@Pearlepp.co.uk
Website: www. pearlepp.co.uk
Tel no. 02035763199

Project: 68 GROVE PARK RD UK		**Sheet No./Rev.** 427
Job Ref. 2024-06-	**Structural Engineer** **MM**	**Date** **11/06/2024**

B, UC 203 x 203 x 46 - Web 1:

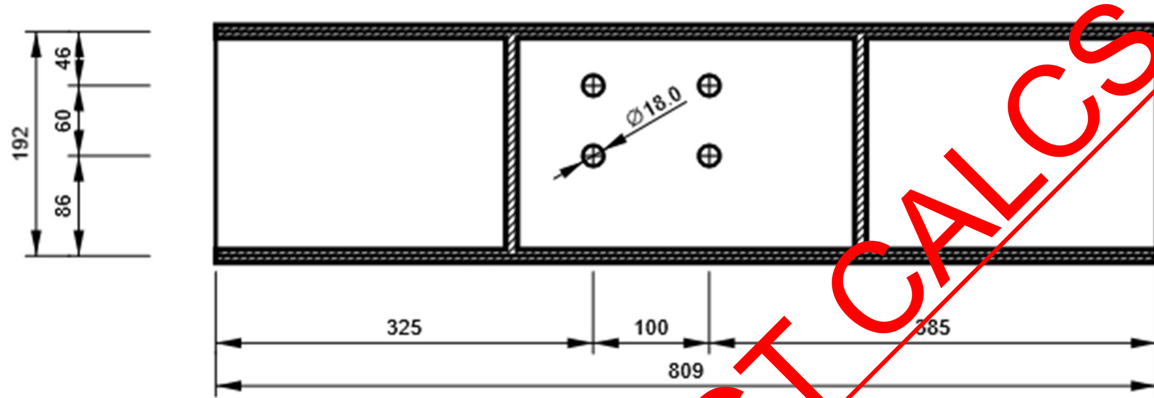

M3, UC 152 x 152 x 23 - Web 1:

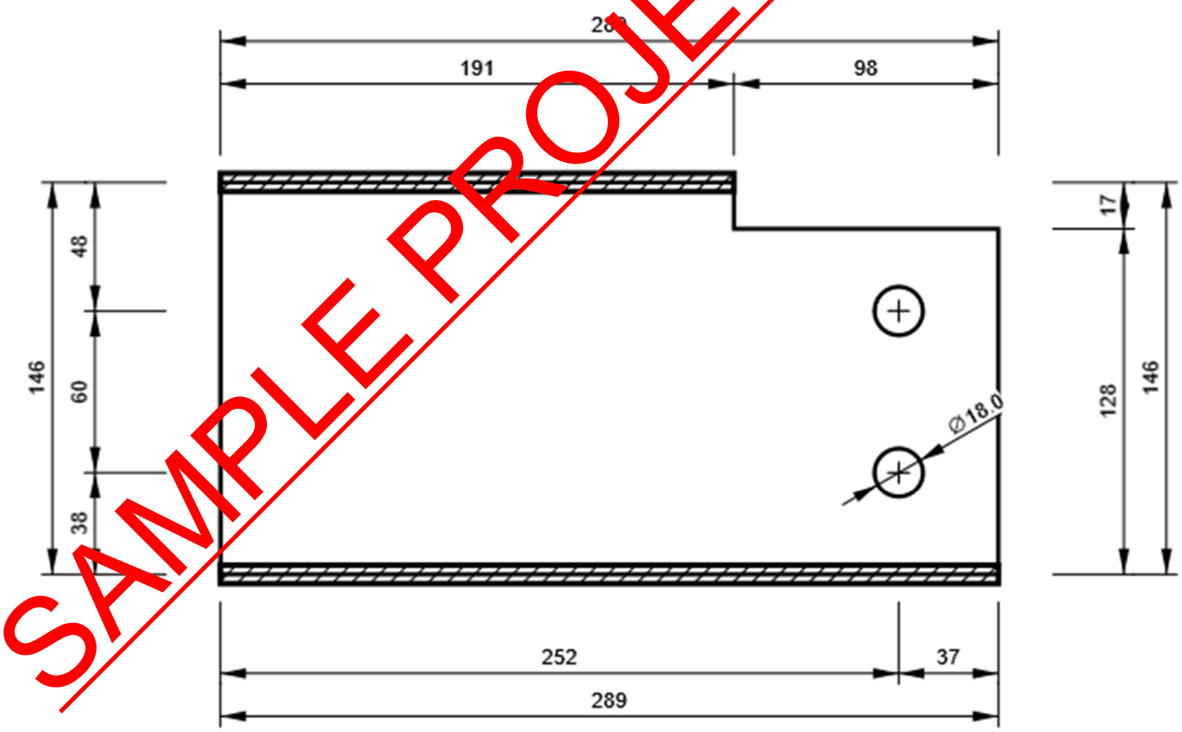

CLEAT1 a, L80X8 - Bottom flange 1:

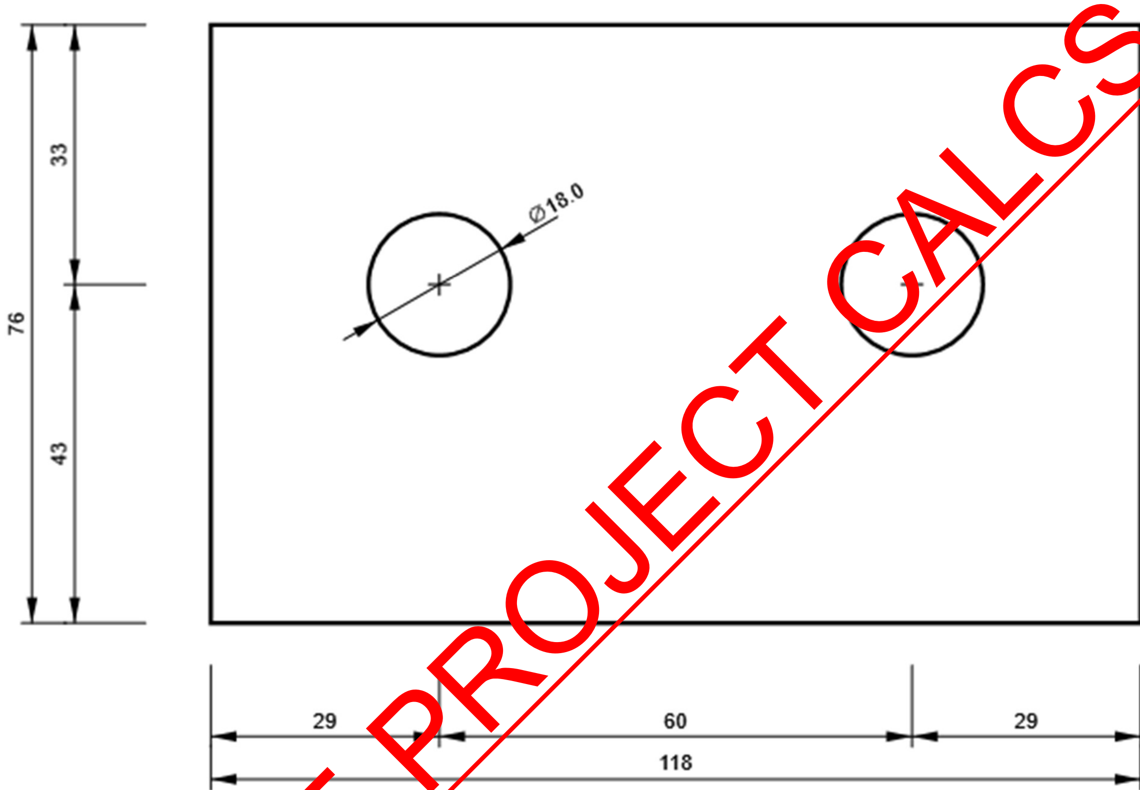

CLEAT1 a, L80X8 - Web 1:

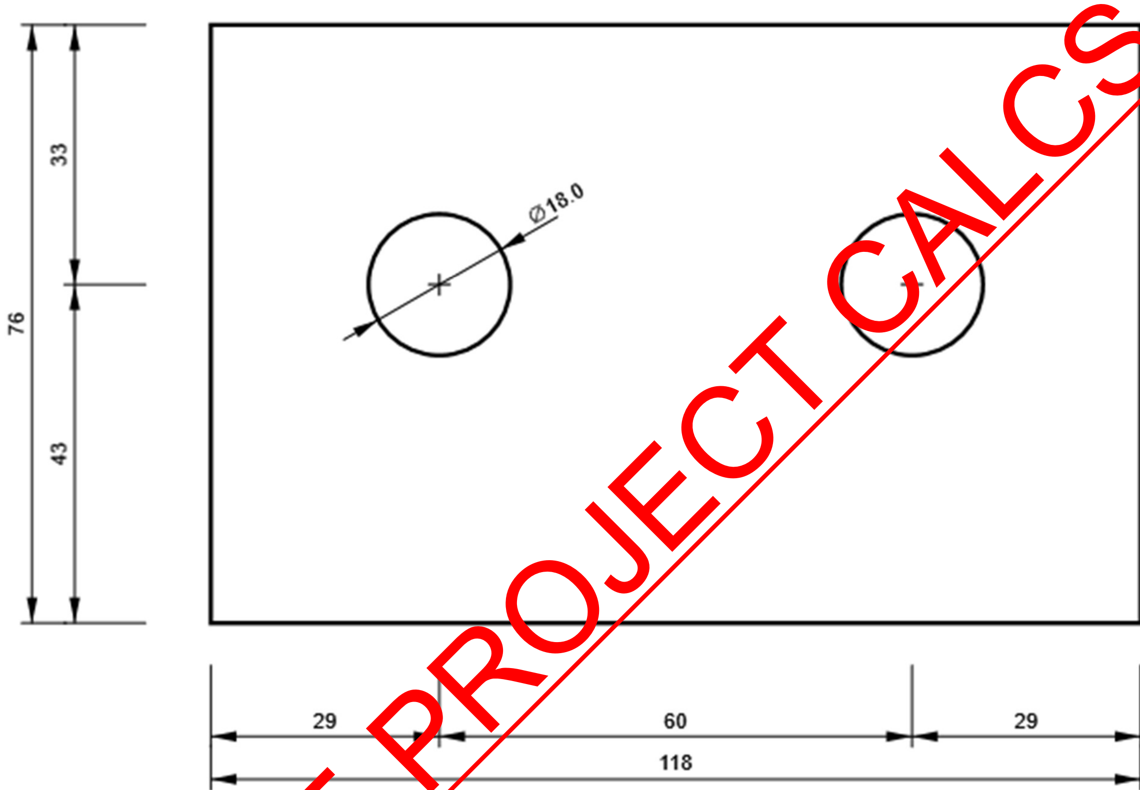

CLEAT1 b, L80X8 - Bottom flange 1:

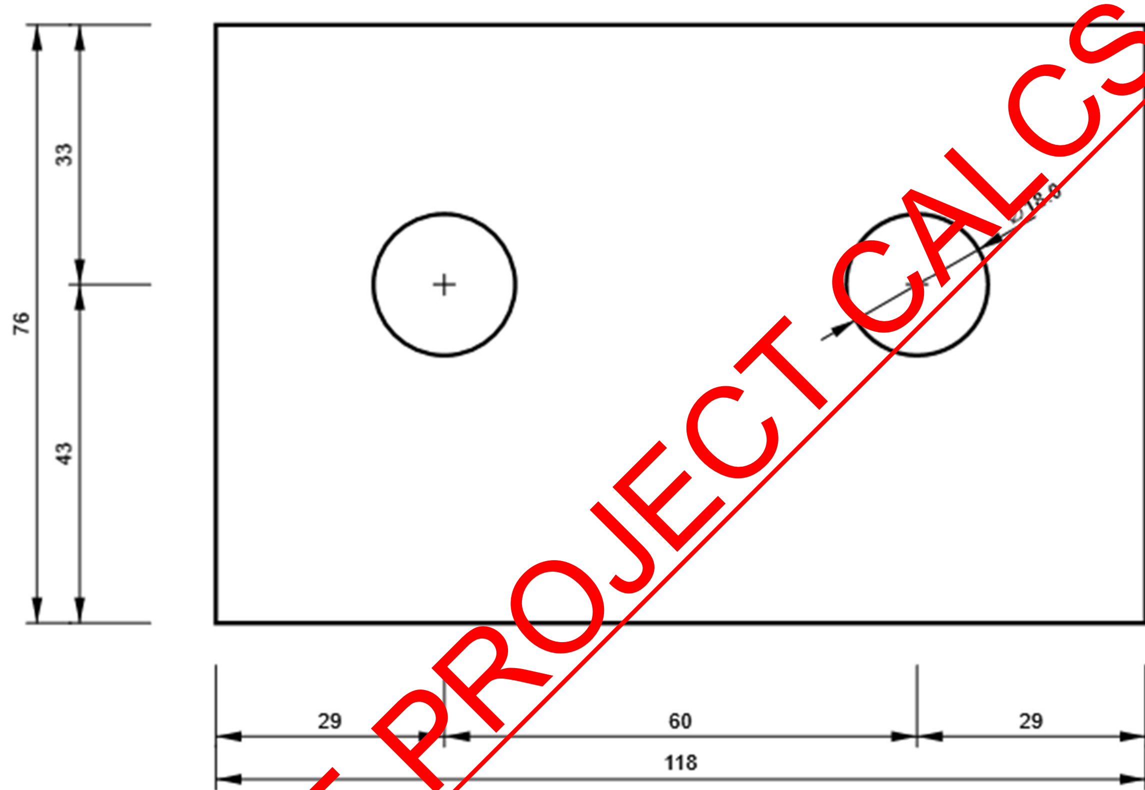

CLEAT1 b, L80X8 - Web 1:

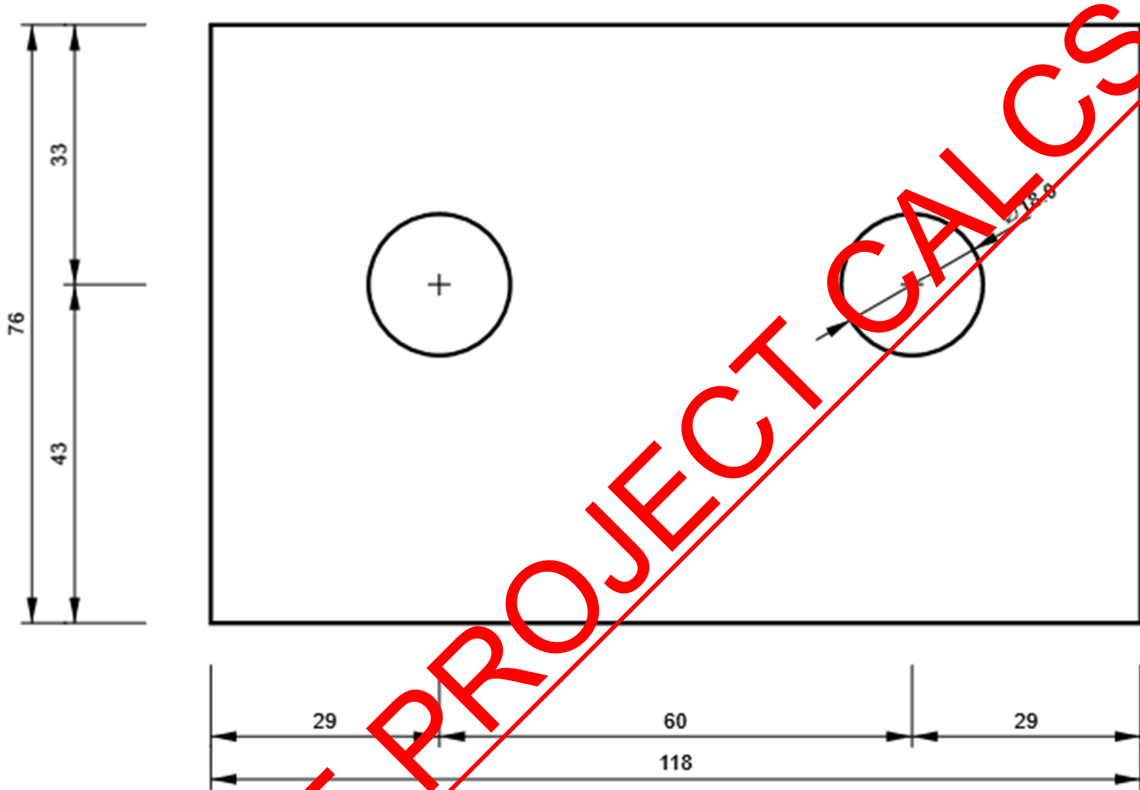

02 TOWERFIELDS WESTERHAM ROAD
BROMLEY, BR2 6HF
Email: info@Pearlepp.co.uk
Website: www. pearlepp.co.uk
Tel no. 02035763199

- **Connection-17**

Project data

Project name	
Project number	
Author	
Description	
Date	
Design code	EN

Material

Steel	S 275

Project item CON17

Design

Name	CON17
Description	
Analysis	Stress, strain/ simplified loading

Beams and columns

Name	Cross-section	β – Direction [°]	γ - Pitch [°]	α - Rotation [°]	Offset ex [mm]	Offset ey [mm]	Offset ez [mm]	Forces in	X [mm]
C	3 - SHS100/100/10.0	0.0	90.0	0.0	0	0	0	Bolts	0
B	2 - UC 203 x 203 x 46	0.0	0.0	0.0	0	0	0	Bolts	0
M3	4 - UC 152 x 152 x 23	-90.0	0.0	0.0	0	30	25	Bolts	51
M4	6 - UC 152 x 152 x 30	90.0	0.0	0.0	0	130	25	Bolts	51

PEARL ENGINEERS, PLANNERS & PROJECT MANAGERS 02 TOWERFIELDS WESTERHAM ROAD BROMLEY, BR2 6HF Email: info@Pearlepp.co.uk Website: www. pearlepp.co.uk Tel no. 02035763199	**Project:** 68 GROVE PARK RD UK		**Sheet No./Rev.** 433
	Job Ref. 2024-06-	**Structural Engineer** **MM**	**Date** **11/06/2024**

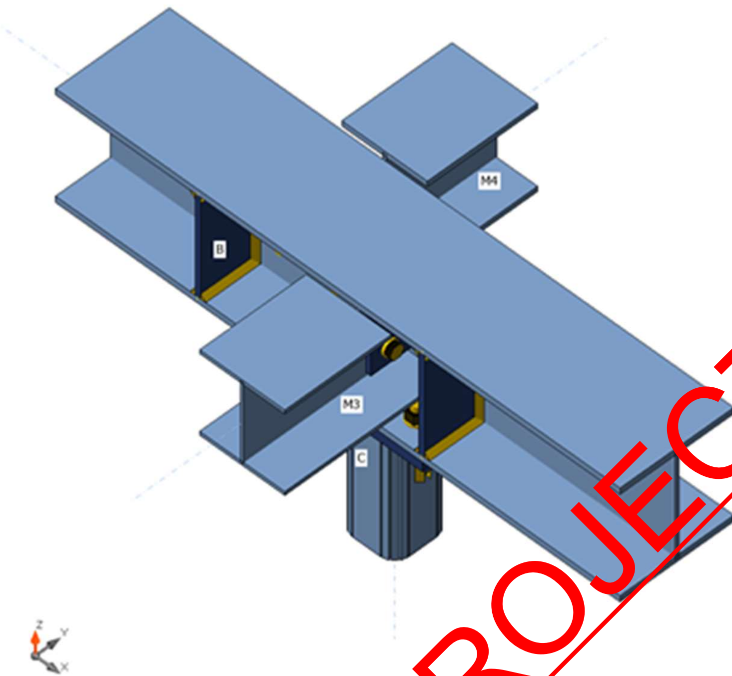

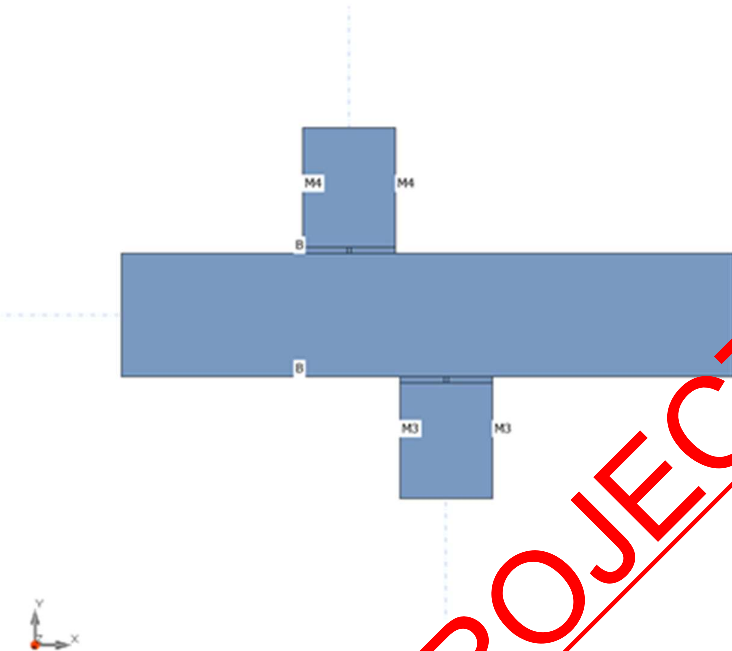

M4
M4
B
B
M3
M3
Y
X

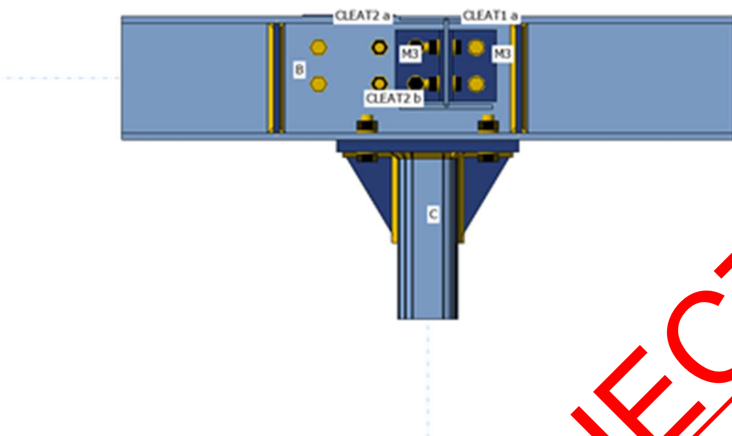

CLEAT2 a
CLEAT1 a
M3
M3
B
CLEAT2 b
C

z
x

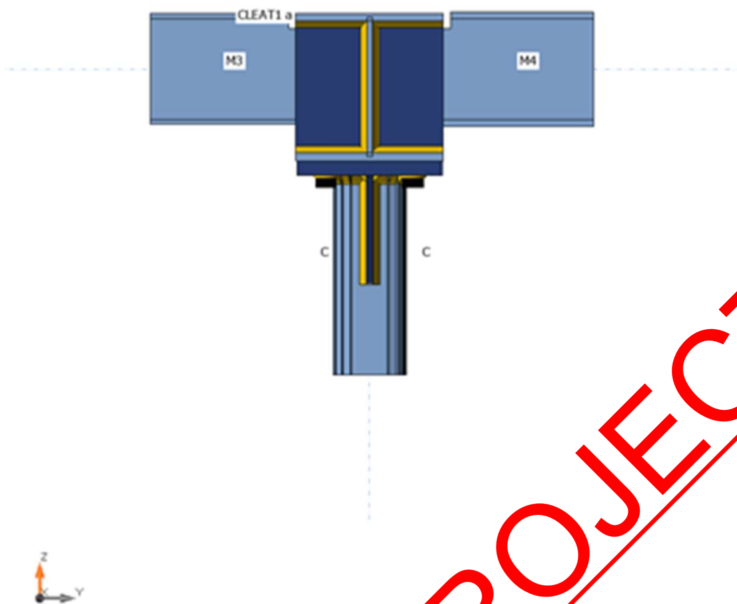

Cross-sections

Name	Material
3 - SHS100/100/10.0	S 275
2 - UC 203 x 203 x 46	S 275
4 - UC 152 x 152 x 23	S 275
6 - UC 152 x 152 x 30	S 355
5 - L80X8	S 275

Cross-sections

Name	Material	Drawing

3 - SHS100/100/10.0	S 275	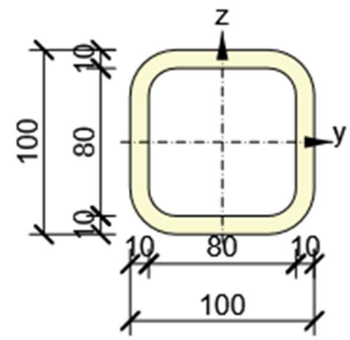
2 - UC 203 x 203 x 46	S 275	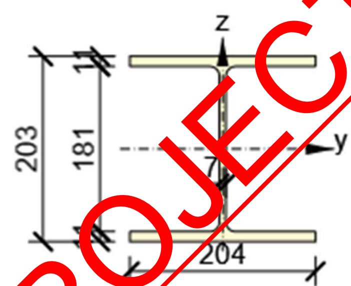
4 - UC 152 x 152 x 23	S 275	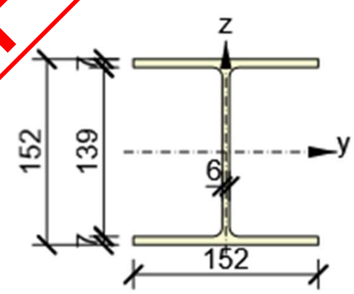
6 - UC 152 x 152 x 30	S 355	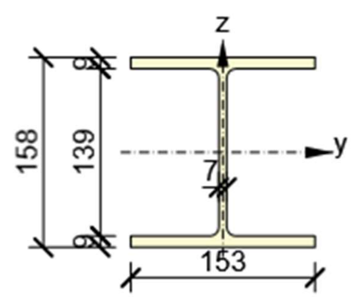

5 - L80X8	S 275	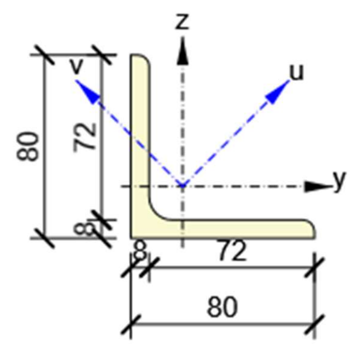

Bolts

Name	Bolt assembly	Diameter [mm]	fu [MPa]	Gross area [mm²]
M20 8.8	M20 8.8	20	800.0	314
M16 8.8	M16 8.8	16	800.0	201

Load effects (equilibrium not required)

Name	Member	N [kN]	Vy [kN]	Vz [kN]	Mx [kNm]	My [kNm]	Mz [kNm]
LE1	B	0.0	0.0	-50.0	0.0	10.0	0.0
	B	0.0	0.0	-50.0	0.0	15.0	0.0
	M3	0.0	0.0	-30.0	0.0	0.0	0.0
	M4	0.0	0.0	-30.0	0.0	0.0	0.0

Check

Summary

Name	Value	Status
Analysis	100.0%	OK
Plates	0.7 < 5.0%	OK
Bolts	32.9 < 100%	OK
Welds	73.2 < 100%	OK
Buckling	Not calculated	
GMNA	Calculated	

Plates

Name	Material	Thickness	Loads	σ_{Ed}	ε_{Pl}	σc_{Ed}	Status

		[mm]		[MPa]	[%]	[MPa]	
C	S 275	10.0	LE1	276.5	0.7	0.0	OK
B-bfl 1	S 275	11.0	LE1	246.0	0.0	24.8	OK
B-tfl 1	S 275	11.0	LE1	94.0	0.0	0.0	OK
B-w 1	S 275	7.2	LE1	275.1	0.0	166.8	OK
M3-bfl 1	S 275	6.8	LE1	49.7	0.0	0.0	OK
M3-tfl 1	S 275	6.8	LE1	64.6	0.0	0.0	OK
M3-w 1	S 275	5.8	LE1	176.0	0.0	40.1	OK
M4-bfl 1	S 355	9.4	LE1	37.8	0.0	0.0	OK
M4-tfl 1	S 355	9.4	LE1	53.3	0.0	0.0	OK
M4-w 1	S 355	6.5	LE1	158.3	0.0	39.8	OK
CLEAT1 a-bfl 1	S 275	8.0	LE1	205.6	0.0	153.0	OK
CLEAT1 a-w 1	S 275	8.0	LE1	208.2	0.0	153.0	OK
CLEAT1 b-bfl 1	S 275	8.0	LE1	275.0	0.0	137.0	OK
CLEAT1 b-w 1	S 275	8.0	LE1	221.2	0.0	137.0	OK
CLEAT2 a-bfl 1	S 275	8.0	LE1	275.0	0.0	166.8	OK
CLEAT2 a-w 1	S 275	8.0	LE1	214.5	0.0	166.8	OK
CLEAT2 b-bfl 1	S 275	8.0	LE1	223.4	0.0	160.8	OK
CLEAT2 b-w 1	S 275	8.0	LE1	212.8	0.0	160.8	OK
EP1	S 275	20.0	LE1	135.0	0.0	24.8	OK
RIB1	S 275	10.0	LE1	276.0	0.5	0.0	OK
RIB2	S 275	10.0	LE1	230.2	0.0	0.0	OK
STIFF1a	S 275	10.0	LE1	31.5	0.0	0.0	OK
STIFF1b	S 275	10.0	LE1	29.7	0.0	0.0	OK
STIFF1c	S 275	10.0	LE1	58.3	0.0	0.0	OK
STIFF1d	S 275	10.0	LE1	72.6	0.0	0.0	OK
STIFF2	S 275	10.0	LE1	115.8	0.0	0.0	OK

Design data

Material	f_y [MPa]	ε_{lim} [%]
S 275	275.0	5.0
S 355	355.0	5.0

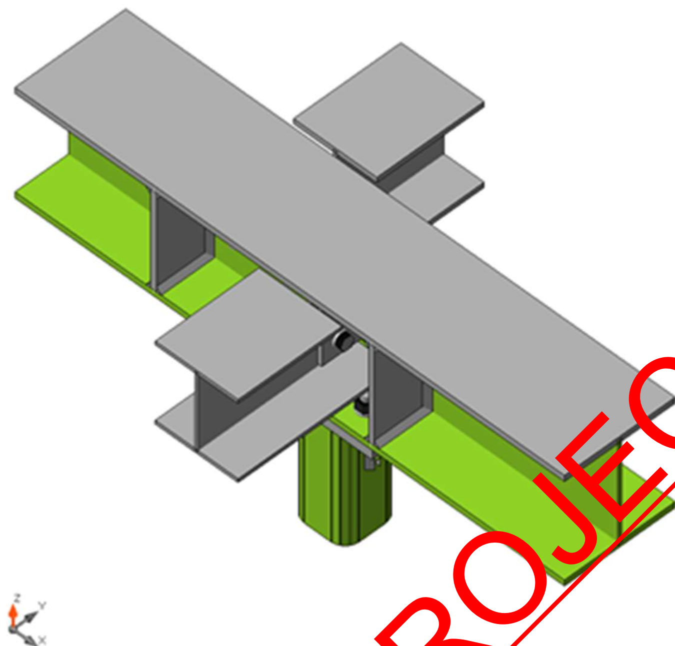

Overall check, LE1

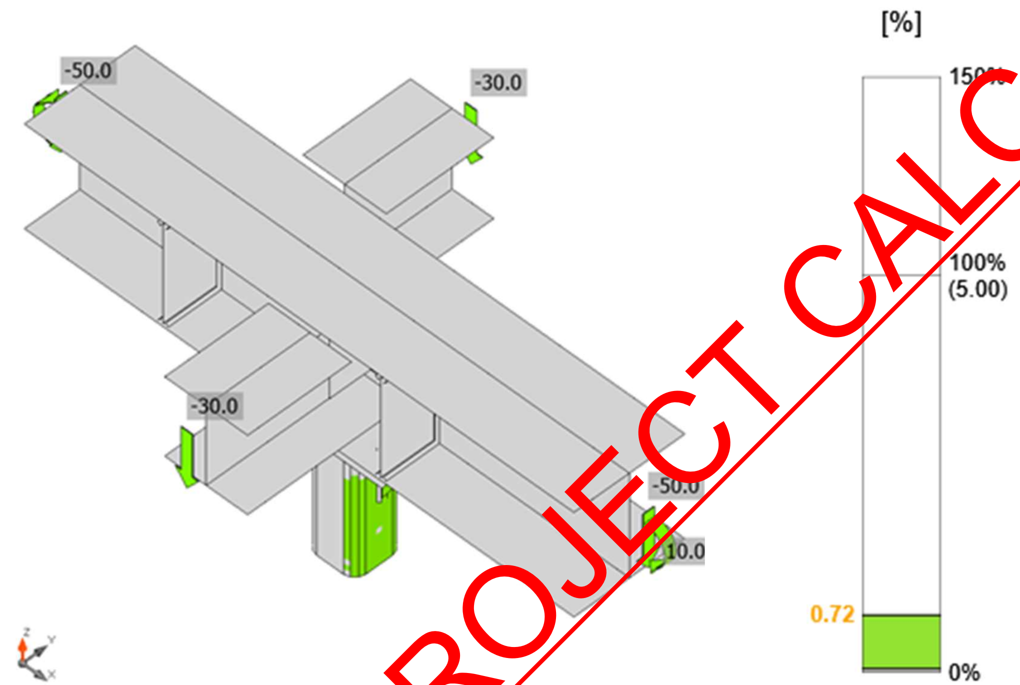

Strain check, LE1

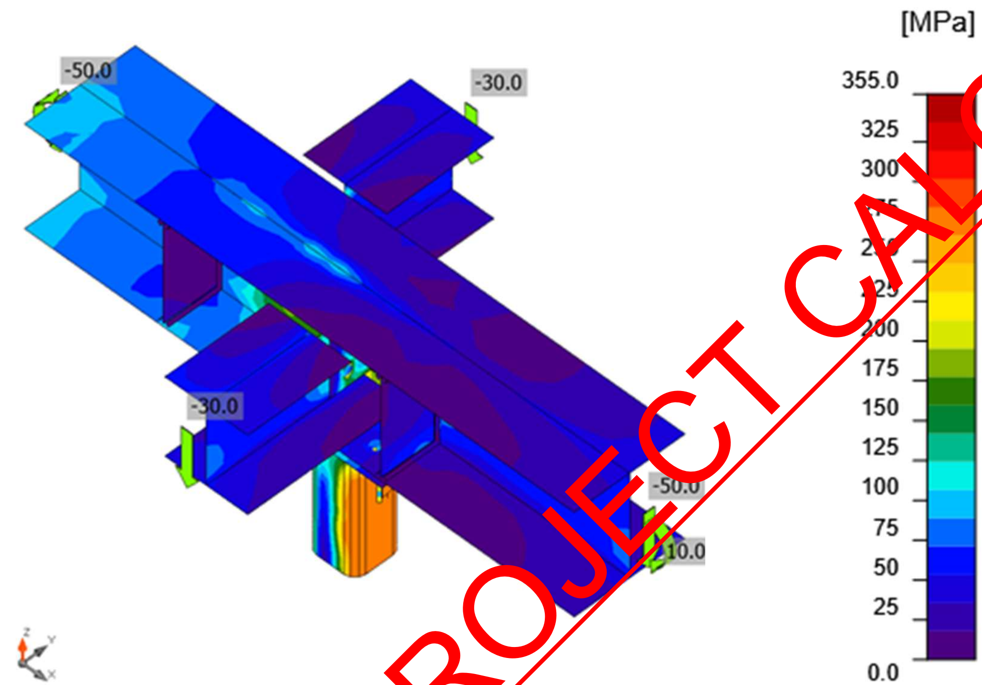

Equivalent stress, LE1

Bolts

	Name	Grade	Loads	$F_{t,Ed}$ [kN]	V [kN]	Ut_t [%]	$F_{b,Rd}$ [kN]	Ut_s [%]	Ut_{ts} [%]	Status
	B1	M20 8.8 - 1	LE1	2.1	0.3	1.5	189.2	0.4	1.4	OK
	B2	M20 8.8 - 1	LE1	1.7	1.8	1.2	189.2	1.9	2.8	OK
	B3	M20 8.8 - 1	LE1	36.1	1.5	25.5	128.1	1.6	19.8	OK
	B4	M20 8.8 - 1	LE1	32.9	1.2	23.3	130.9	1.3	17.9	OK
	B5	M16 8.8 - 2	LE1	9.8	8.0	10.9	68.7	22.0	21.0	OK
	B6	M16 8.8 - 2	LE1	5.8	7.8	6.4	45.2	32.9	17.4	OK
	B7	M16 8.8 - 3	LE1	4.5	9.4	5.0	99.1	15.5	19.1	OK

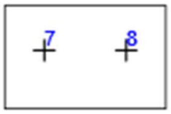	B8	M16 8.8 - 3	LE1	16.3	7.6	18.0	59.1	12.9	25.6	OK
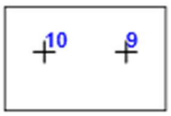	B9	M16 8.8 - 3	LE1	5.8	8.0	6.4	99.1	13.3	17.9	OK
	B10	M16 8.8 - 3	LE1	17.9	7.4	19.8	59.1	[illegible]	26.5	OK
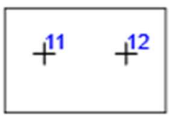	B11	M16 8.8 - 2	LE1	9.0	8.1	[illegible]	87.8	17.2	20.5	OK
	B12	M16 8.8 - 2	LE1	5.6	7.8	6.2	57.8	25.8	17.4	OK
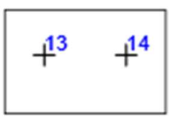	B13	M16 8.8 - 3	LE1	6.0	[illegible]	6.7	98.9	13.4	18.2	OK
	B14	M16 8.8 - 3	LE1	17.8	7.5	19.6	59.1	12.7	26.5	OK
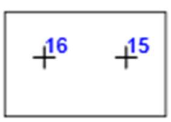	B15	M16 8.8 - 3	LE1	5.6	9.5	6.2	97.4	15.7	20.1	OK
	B16	M16 8.8 - 3	LE1	15.2	8.1	16.8	59.1	13.6	25.3	OK

Design data

Name	$F_{t,Rd}$ [kN]	$B_{p,Rd}$ [kN]	$F_{v,Rd}$ [kN]
M20 8.8 - 1	141.1	224.7	94.1
M16 8.8 - 2	90.4	129.7	60.3
M16 8.8 - 3	90.4	116.7	60.3

Detailed result for B6

Tension resistance check (EN 1993-1-8 tab 3.4)

$$F_{t,Rd} = \frac{k_2 f_{ub} A_s}{\gamma_{M2}} = \quad 90.4 \text{ kN} \geq F_t = \quad 5.8 \text{ kN}$$

where:

$k_2 = 0.90$ – Factor

PEPP
PEARL ENGINEERS, PLANNERS & PROJECT MANAGERS
02 TOWERFIELDS WESTERHAM ROAD
BROMLEY, BR2 6HF
Email: info@Pearlepp.co.uk
Website: www. pearlepp.co.uk
Tel no. 02035763199

f_{ub} = 800.0 MPa – Ultimate tensile strength of the bolt

A_s = 157 mm^2 – Tensile stress area of the bolt

γ_{M2} = 1.25 – Safety factor

Punching resistance check (EN 1993-1-8 tab 3.4)

$$B_{p,Rd} = \frac{0.6\pi d_m t_p f_u}{\gamma_{M2}} = 129.7 \text{ kN} \geq F_t = 5.8 \text{ kN}$$

where:

d_m = 25 mm – The mean of the across points and across flats dimensions of the bolt head or the nut, whichever is smaller

t_p = 8 mm – Thickness

f_u = 430.0 MPa – Ultimate strength

γ_{M2} = 1.25 – Safety factor

Shear resistance check (EN 1993-1-8 tab 3.4)

$$F_{v,Rd} = \frac{\beta_p \alpha_v f_{ub} A}{\gamma_{M2}} = 60.3 \text{ kN} \geq V = 7.8 \text{ kN}$$

where:

β_p = 1.00 – Reducing factor

α_v = 0.60 – Reducing factor

f_{ub} = 800.0 MPa – Ultimate tensile strength of the bolt

A = 157 mm^2 – Tensile stress area of the bolt

γ_{M2} = 1.25 – Safety factor

Bearing resistance check (EN 1993-1-8 tab 3.4)

$$F_{b,Rd} = \frac{k_1 \alpha_b f_u d t}{\gamma_{M2}} = 45.2 \text{ kN} \geq V = 14.9 \text{ kN}$$

where:

$k_1 = \min(2.8\frac{e_2}{d_0} - 1.7, 1.4\frac{p_2}{d_0} - 1.7, 2.5) = 2.50$ – Factor for edge distance and bolt spacing perpendicular to the direction of load transfer

$\alpha_b = \min(\frac{e_1}{3d_0}, \frac{p_1}{3d_0} - \frac{1}{4}, \frac{f_{ub}}{f_u}, 1) = 0.57$ – Factor for end distance and bolt spacing in direction of load transfer

e_2 = 33 mm – Distance to the plate edge perpendicular to the shear force

p_2 = ∞ mm – Distance between bolts perpendicular to the shear force

d_0 = 18 mm – Bolt hole diameter

e_1 = 31 mm – Distance to the plate edge in the direction of the shear force

p_1 = ∞ mm – Distance between bolts in the direction of the shear force

f_{ub} = 800.0 MPa – Ultimate tensile strength of the bolt

PEPP
PEARL ENGINEERS, PLANNERS & PROJECT MANAGERS
02 TOWERFIELDS WESTERHAM ROAD
BROMLEY, BR2 6HF
Email: info@Pearlepp.co.uk
Website: www. pearlepp.co.uk
Tel no. 02035763199

$f_u =$ 430.0 MPa – Ultimate strength

$d =$ 16 mm – Nominal diameter of the fastener

$t =$ 6 mm – Thickness of the plate

$\gamma_{M2} =$ 1.25 – Safety factor

Interaction of tension and shear (EN 1993-1-8 tab 3.4)

$$U_{tts} = \frac{F_{v,Ed}}{F_{v,Rd}} + \frac{F_{t,Ed}}{1.4F_{t,Rd}} = \quad 17.4 \quad \%$$

Utilization in tension

$$U_{tt} = \frac{F_{t,Ed}}{\min(F_{t,Rd};B_{p,Rd})} = \quad 6.4 \quad \%$$

Utilization in shear

$$U_{ts} = \frac{V_{Ed}}{\min(F_{v,Rd};F_{b,Rd})} = \quad 32.9 \quad \%$$

Welds (Plastic redistribution)

Item	Edge	Throat th. [mm]	Length [mm]	Loads	$\sigma_{w,Ed}$ [MPa]	ε_{Pl} [%]	$\sigma_\perp$ [MPa]	$\tau_{\|\|}$ [MPa]	$\tau_\perp$ [MPa]	Ut [%]	Ut$_c$ [%]	Status
EP1	C	◢8.5	324	LE1	225.5	0.0	-74.6	-5.8	122.7	55.7	32.8	OK
EP1	RIB1	◢6.5 ◣	90	LE1	266.2	0.0	-102.4	97.1	-103.5	65.8	43.0	OK
		◢6.5 ◣	90	LE1	296.1	0.0	-107.1	-118.9	106.1	73.2	47.9	OK
C-w 3	RIB1	◢6.5 ◣	150	LE1	228.5	0.0	-53.8	-116.4	-53.8	56.5	30.2	OK
		◢6.5 ◣	150	LE1	228.5	0.0	-53.8	116.4	53.8	56.5	30.1	OK
EP1	RIB2	◢6.5 ◣	90	LE1	63.5	0.0	25.7	-20.9	26.3	15.7	12.8	OK
		◢6.5 ◣	90	LE1	67.3	0.0	31.0	16.6	-30.2	16.6	13.8	OK
C-w 1	RIB2	◢6.5 ◣	150	LE1	174.3	0.0	23.1	97.0	23.1	43.1	10.1	OK
		◢6.5 ◣	150	LE1	174.2	0.0	23.1	-97.0	-23.1	43.1	10.1	OK
B-bfl 1	STIFF1a	◢6.5 ◣	98	LE1	13.9	0.0	-12.3	-3.2	-1.7	4.0	2.3	OK
		◢6.5 ◣	98	LE1	18.1	0.0	2.1	-7.3	-7.4	4.5	3.7	OK
B-w 1	STIFF1a	◢6.5 ◣	181	LE1	14.5	0.0	-0.1	3.2	7.7	3.6	1.4	OK
		◢6.5 ◣	181	LE1	14.9	0.0	8.7	4.7	-5.2	3.7	2.3	OK

B-tfl 1	STIFF1 a	◢6.5 ◣	98	LE1	16.1	0.0	8.0	5.2	6.1	4.0	3.5	OK
		◢6.5 ◣	98	LE1	11.6	0.0	-4.0	5.0	-3.8	2.9	2.1	OK
B-bfl 1	STIFF1 b	◢6.5 ◣	98	LE1	18.5	0.0	-0.9	10.7	0.6	4.6	4.[illegible]	OK
		◢6.5 ◣	98	LE1	16.1	0.0	-11.0	6.8	0.4	4.0	3.3	OK
B-w 1	STIFF1 b	◢6.5 ◣	181	LE1	9.7	0.0	-7.3	2.7	-2.5	2.4	1.3	OK
		◢6.5 ◣	181	LE1	12.9	0.0	-2.3	-1.6	1.1	3.2	1.7	OK
B-tfl 1	STIFF1 b	◢6.5 ◣	98	LE1	12.3	0.0	0.8	6.[illegible]	-2.3	3.0	2.6	OK
		◢6.5 ◣	98	LE1	14.0	0.0	10.[illegible]	5.6	-0.7	3.5	1.8	OK
B-bfl 1	STIFF1 c	◢6.5 ◣	98	LE1	37.8	0.0	-8.7	2.9	-19.3	9.3	4.6	OK
		◢6.5 ◣	98	LE1	44.3	0.0	-27.7	-10.3	17.1	10.9	6.4	OK
B-w 1	STIFF1 c	◢6.5 ◣	181	LE1	15.6	0.0	-4.1	-8.2	-4.3	4.1	3.1	OK
		◢6.5 ◣	181	LE1	17.6	0.0	2.5	9.9	-1.7	4.4	3.4	OK
B-tfl 1	STIFF1 c	◢6.5 ◣	98	LE1	11.4	0.0	-4.9	5.0	-3.1	2.8	1.7	OK
		◢6.5 ◣	98	LE1	9.9	0.0	-2.8	-2.9	4.6	2.4	1.5	OK
B-bfl 1	STIFF1 d	◢6.5 ◣	98	LE1	53.8	0.0	-27.8	17.3	-20.2	13.3	10.2	OK
		◢6.5 ◣	98	LE1	31.7	0.0	-9.1	-5.3	16.7	7.8	4.5	OK
B-w 1	STIFF1 d	◢6.5 ◣	181	LE1	22.2	0.0	-4.8	-12.0	-3.6	5.5	4.2	OK
		◢6.5 ◣	181	LE1	25.7	0.0	-3.3	14.0	4.5	6.3	5.3	OK
B-tfl 1	STIFF1 d	◢6.5 ◣	98	LE1	14.6	0.0	-1.7	7.7	-3.4	3.6	2.1	OK
		◢6.5 ◣	98	LE1	13.9	0.0	-4.9	-6.8	3.2	3.4	2.4	OK
B-bfl 1	STIFF2	◢6.5 ◣	98	LE1	71.5	0.0	-43.5	21.5	-24.7	17.7	11.6	OK
		◢6.5 ◣	98	LE1	35.2	0.0	-0.8	-5.1	19.7	8.7	5.5	OK
B-w 1	STIFF2	◢6.5 ◣	181	LE1	41.8	0.0	-20.0	-7.0	-20.0	10.3	5.4	OK
		◢6.5 ◣	181	LE1	45.7	0.0	-18.1	16.2	18.1	11.3	7.8	OK

B-tfl 1	STIFF2	◢6.5 ◣	98	LE1	16.1	0.0	11.3	5.5	-3.6	4.0	3.3	OK
		◢6.5 ◣	98	LE1	23.9	0.0	-9.3	-8.9	9.1	5.9	4.3	OK

Design data

	β_w [-]	$\sigma_{w,Rd}$ [MPa]	0.9 σ [MPa]
S 275	0.85	404.7	309.6

Detailed result for EP1 RIB1

Weld resistance check (EN 1993-1-8 4.5.3.2)

$\sigma_{w,Rd} = f_u/(\beta_w \gamma_{M2}) =$ 404.7 MPa ≥ $\sigma_{w,Ed} = [\sigma_\perp^2 + 3(\tau_\perp^2 + \tau_\parallel^2)]^{0.5} =$ 296.1 MPa

$\sigma_{\perp,Rd} = 0.9 f_u/\gamma_{M2} =$ 309.6 MPa ≥ $|\sigma_\perp| =$ 107.1 MPa

where:

$f_u =$ 430.0 MPa – Ultimate strength

$\beta_w =$ 0.85 – appropriate correlation factor taken from Table 4.1

$\gamma_{M2} =$ 1.25 – Safety factor

Stress utilization

$U_t = \max(\frac{\sigma_{w,Ed}}{\sigma_{w,Rd}}; \frac{|\sigma_\perp|}{\sigma_{\perp,Rd}}) =$ 73.2 %

Buckling

Buckling analysis was not calculated.

Bill of material

Manufacturing operations

Name	Plates [mm]	Shape	Nr.	Welds [mm]	Length [mm]	Bolts	Nr.
EP1	P20.0x200.0-300.0 (S 275)		1	Fillet: a = 8.5	324.2	M20 8.8	4

RIB1	P10.0x90.0-150.0 (S 275)		1	Double fillet: a = 6.5	240.0		
RIB2	P10.0x90.0-150.0 (S 275)		1	Double fillet: a = 6.5	240.0		
STIFF1	P10.0x98.2-181.2 (S 275)		4	Double fillet: a = 6.5	1510.4		
CUT1							
STIFF2	P10.0x98.2-181.2 (S 275)		1	Double fillet: a = 6.5	377.6		
CUT2							

Welds

Type	Material	Throat thickness [mm]	Leg size [mm]	Length [mm]
Fillet	S 275	8.5	12.0	324.2
Double fillet	S 275	6.5	9.2	2368.0

Bolts

Name	Grip length [mm]	Count
M20 8.8	31	4
M16 8.8	22	4
M16 8.8	15	8

Drawing

EP1

P20.0x300-200 (S 275)

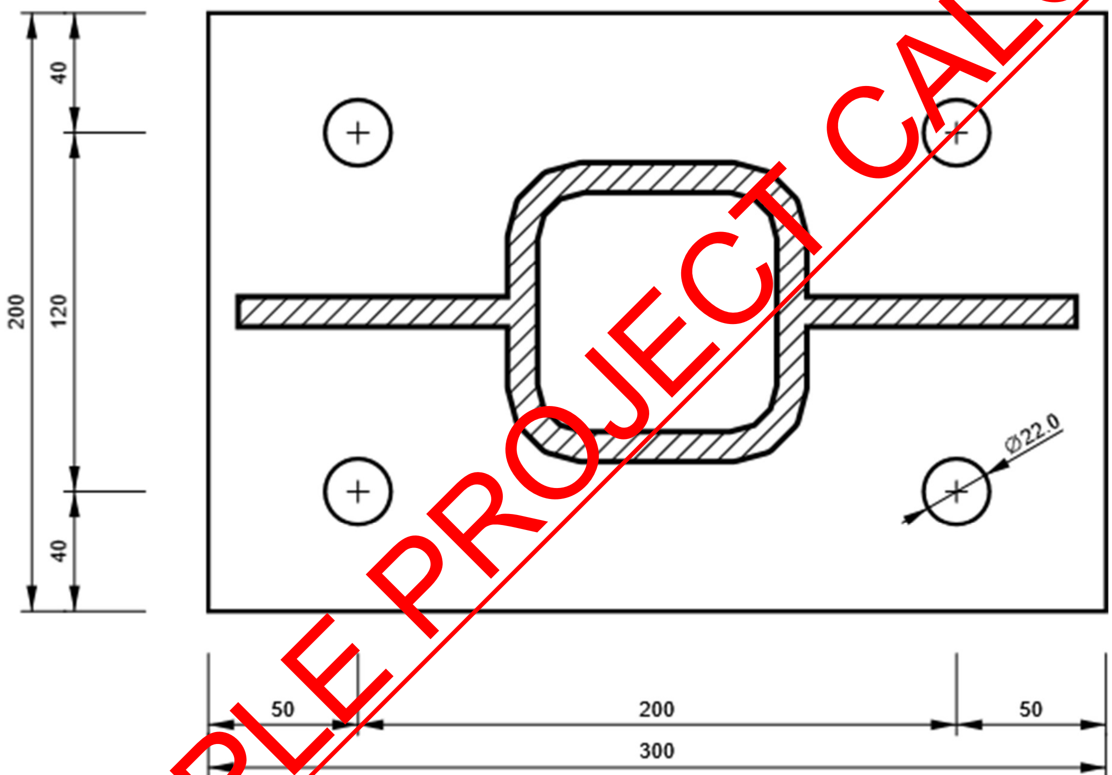

RIB1

P10.0x150-90 (S 275)

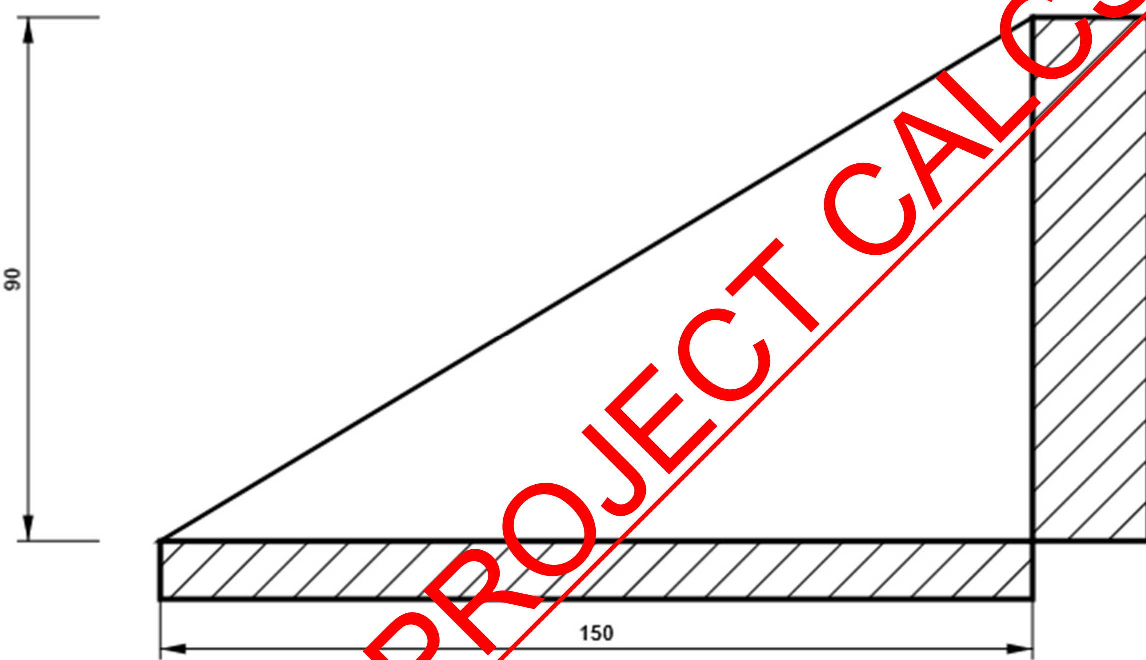

RIB2

P10.0x150-90 (S 275)

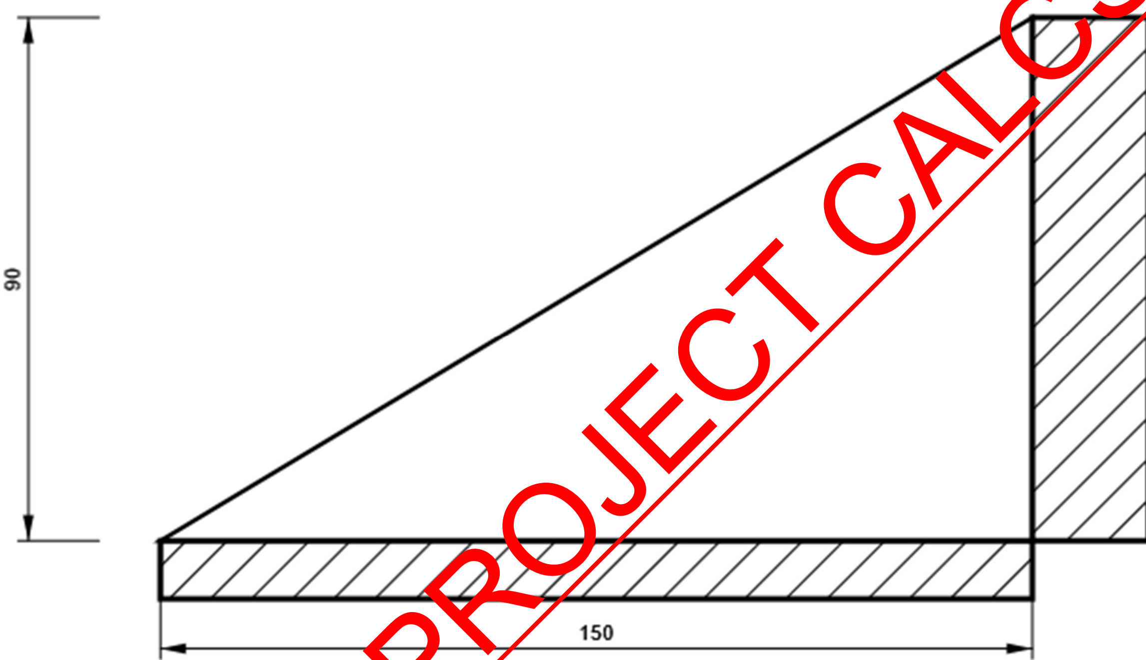

STIFF1

P10.0x181-98 (S 275)

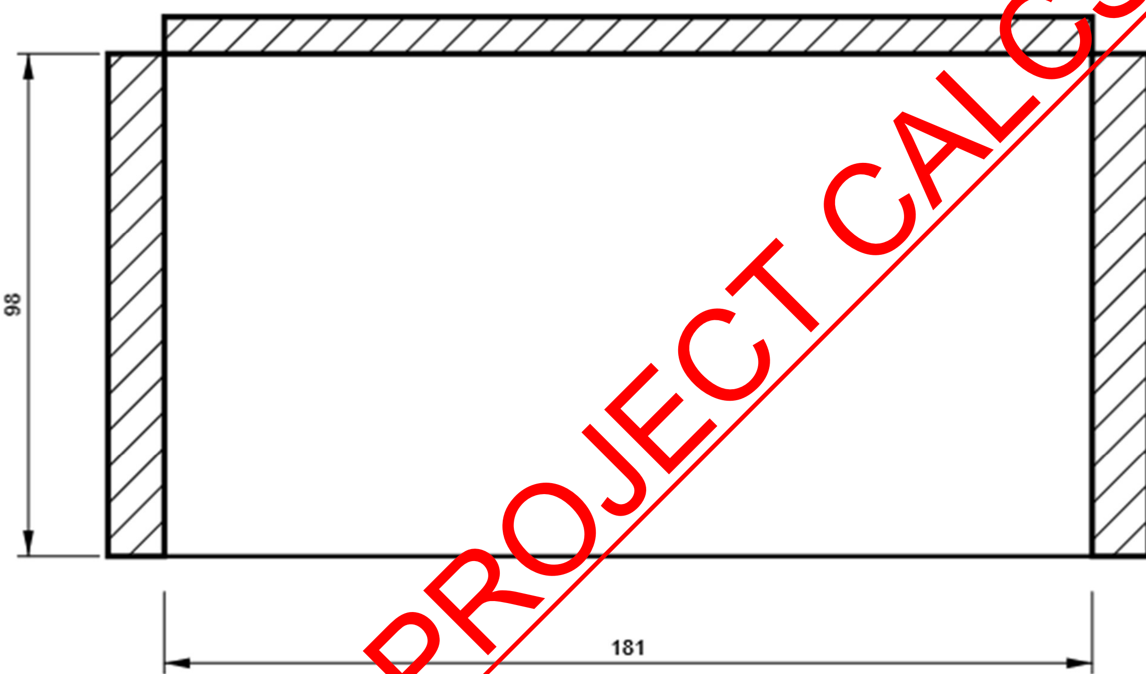

STIFF2

P10.0x181-98 (S 275)

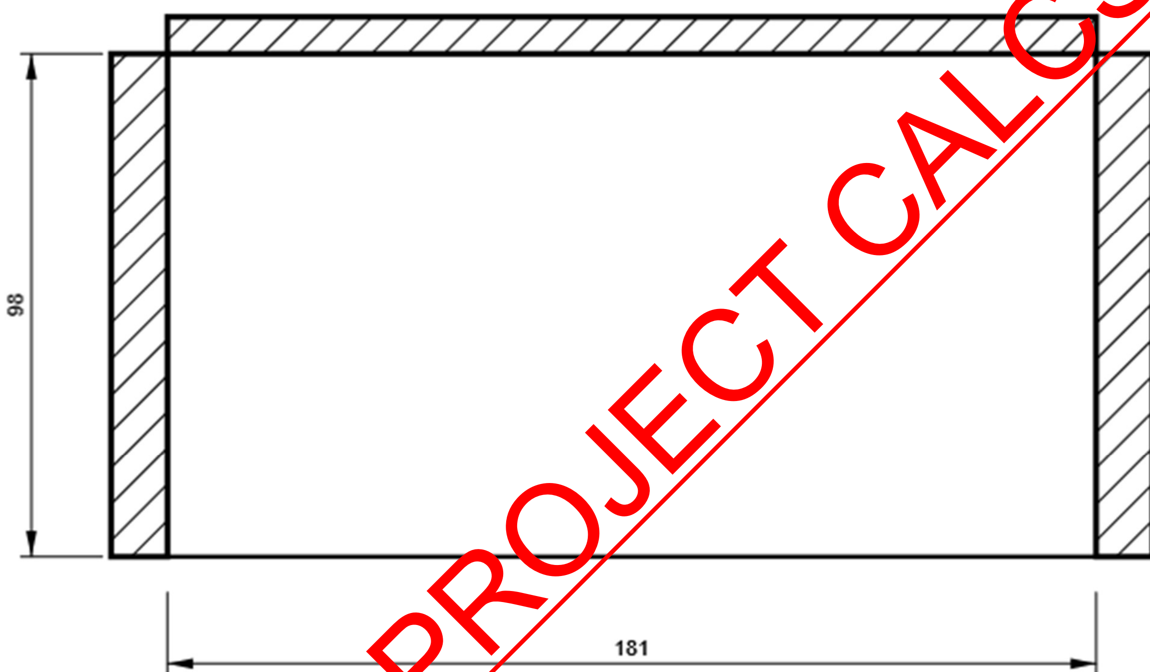

B, UC 203 x 203 x 46 - Bottom flange 1:

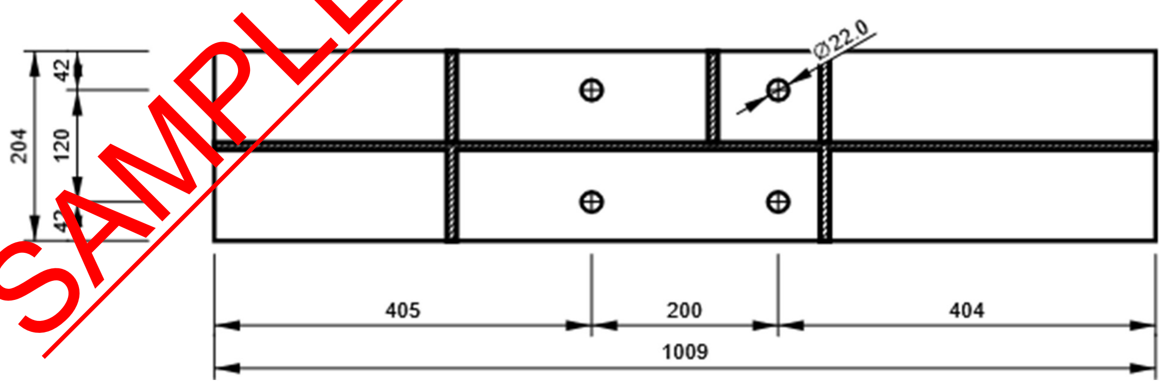

B, UC 203 x 203 x 46 - Web 1:

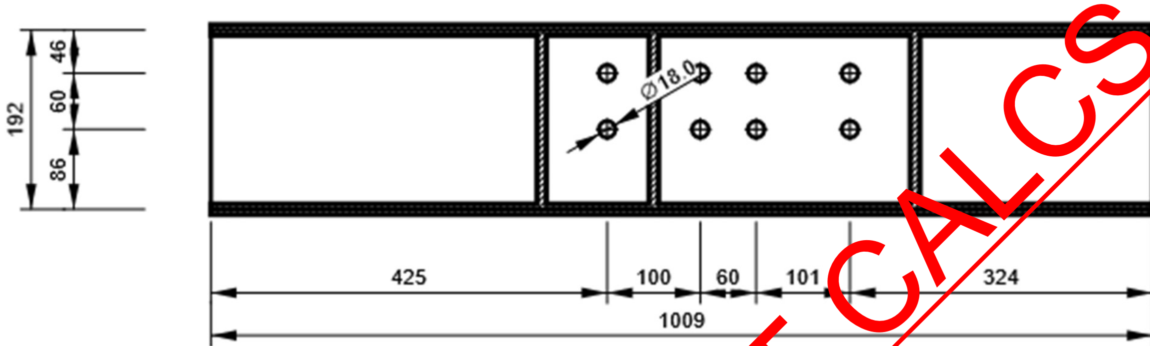

M3, UC 152 x 152 x 23 - Web 1:

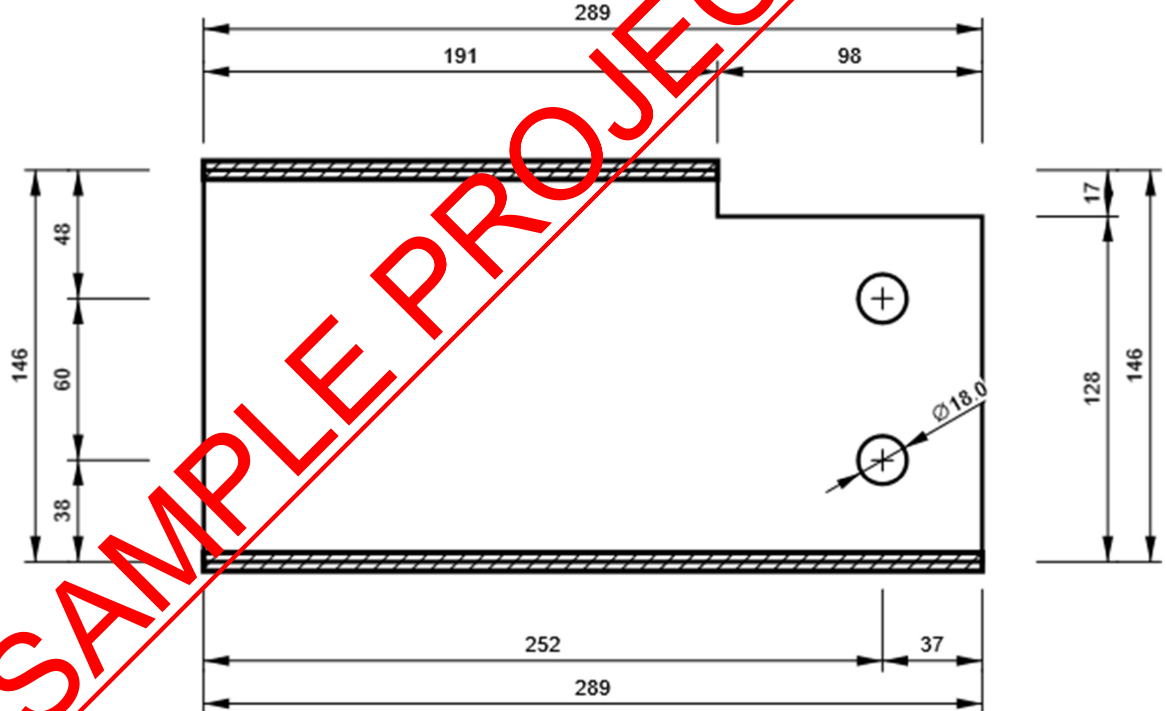

PEPP PEARL ENGINEERS, PLANNERS & PROJECT MANAGERS	**Project:** 68 GROVE PARK RD UK		**Sheet No./Rev.** 455
02 TOWERFIELDS WESTERHAM ROAD BROMLEY, BR2 6HF Email: info@Pearlepp.co.uk Website: www. pearlepp.co.uk Tel no. 02035763199	**Job Ref. 2024-06-**	**Structural Engineer** **MM**	**Date 11/06/2024**

M4, UC 152 x 152 x 30 - Web 1:

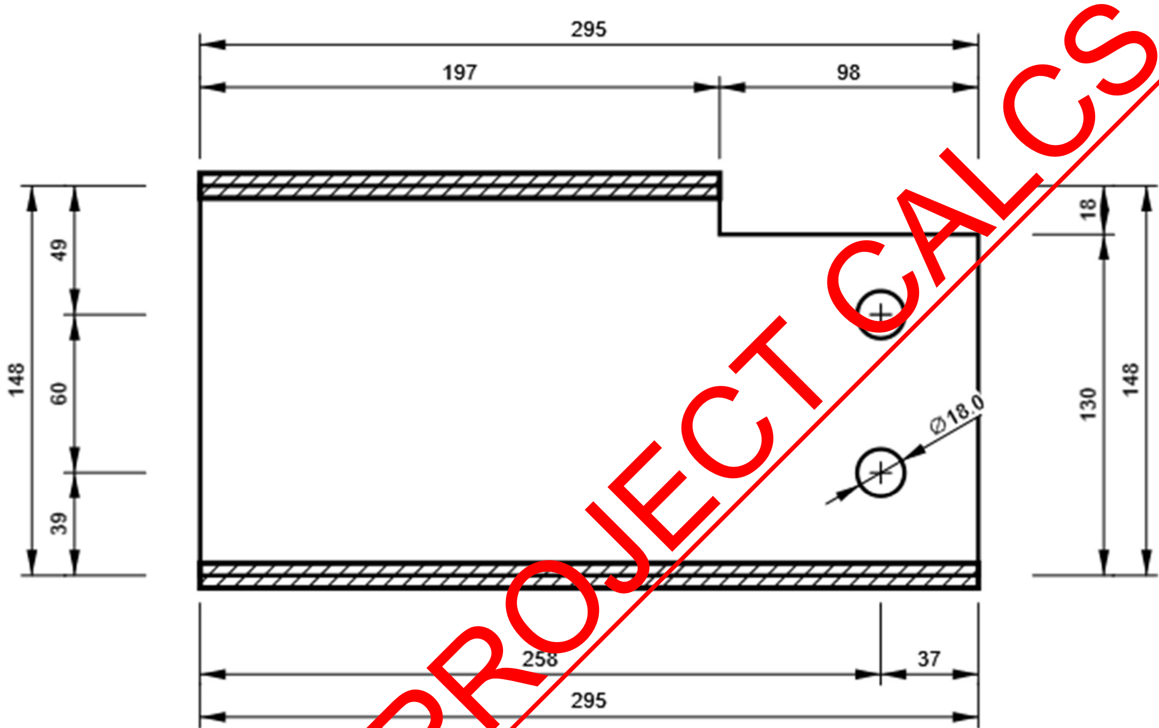

CLEAT1 a, L80X8 - Bottom flange 1:

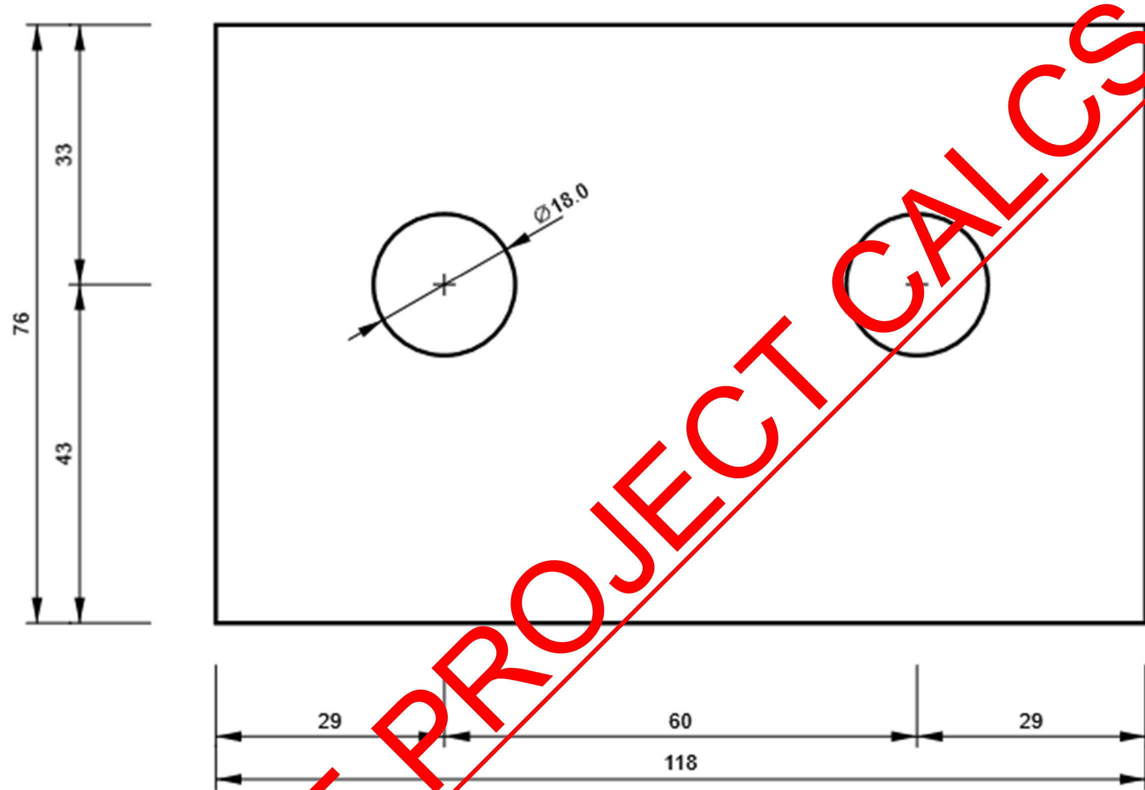

CLEAT1 a, L80X8 - Web 1:

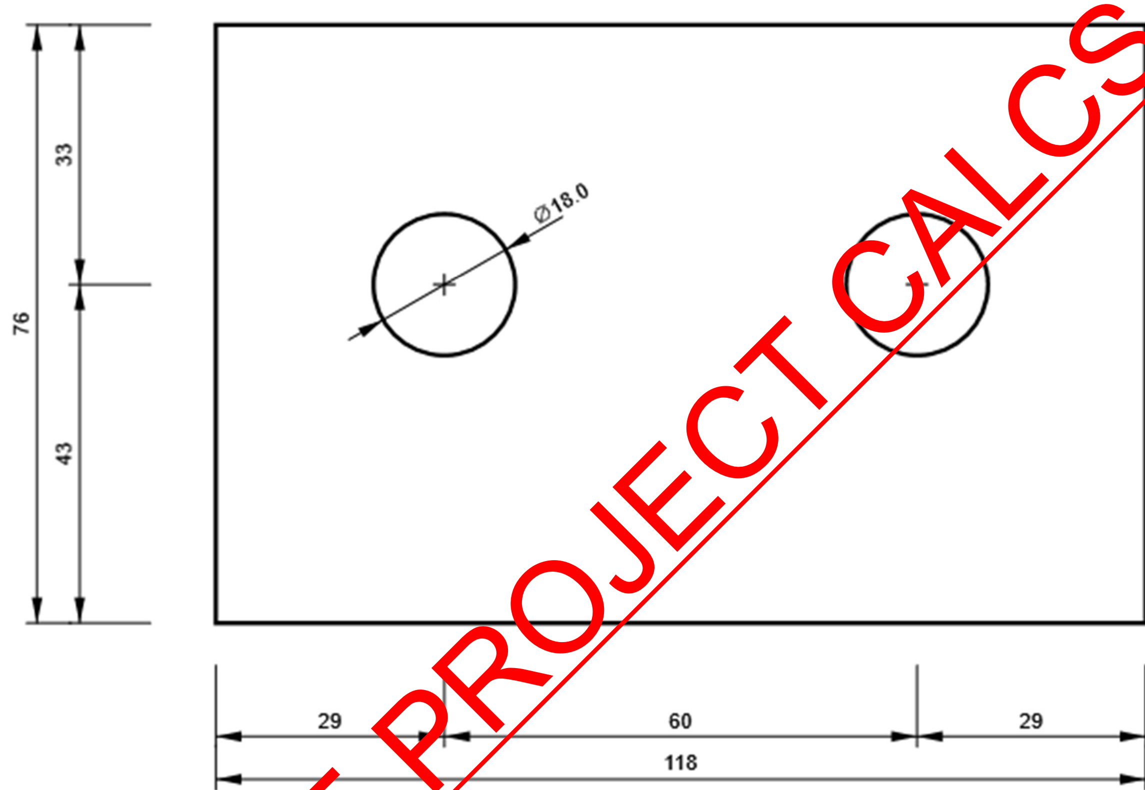

PEARL ENGINEERS, PLANNERS & PROJECT MANAGERS	**Project:** 68 GROVE PARK RD UK		**Sheet No./Rev.** 458
02 TOWERFIELDS WESTERHAM ROAD BROMLEY, BR2 6HF Email: info@Pearlepp.co.uk Website: www. pearlepp.co.uk Tel no. 02035763199	**Job Ref. 2024-06-**	**Structural Engineer** **MM**	**Date** **11/06/2024**

CLEAT1 b, L80X8 - Bottom flange 1:

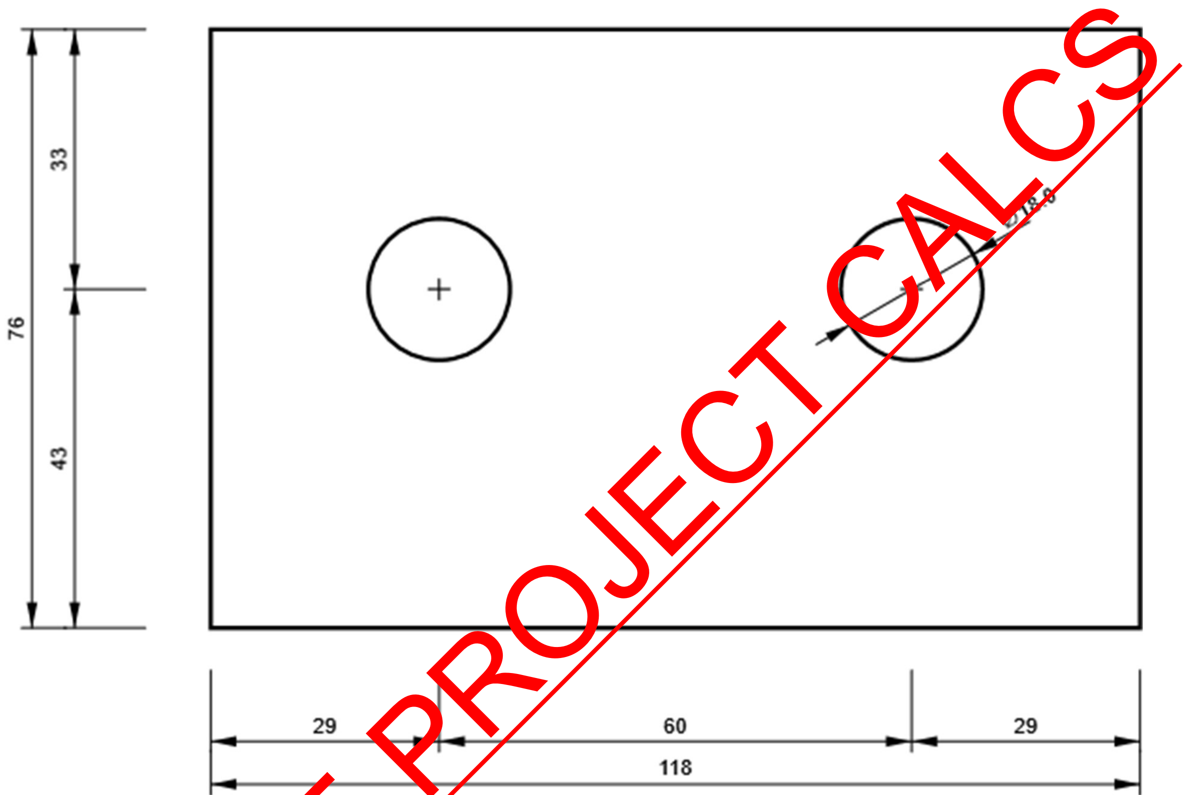

CLEAT1 b, L80X8 - Web 1:

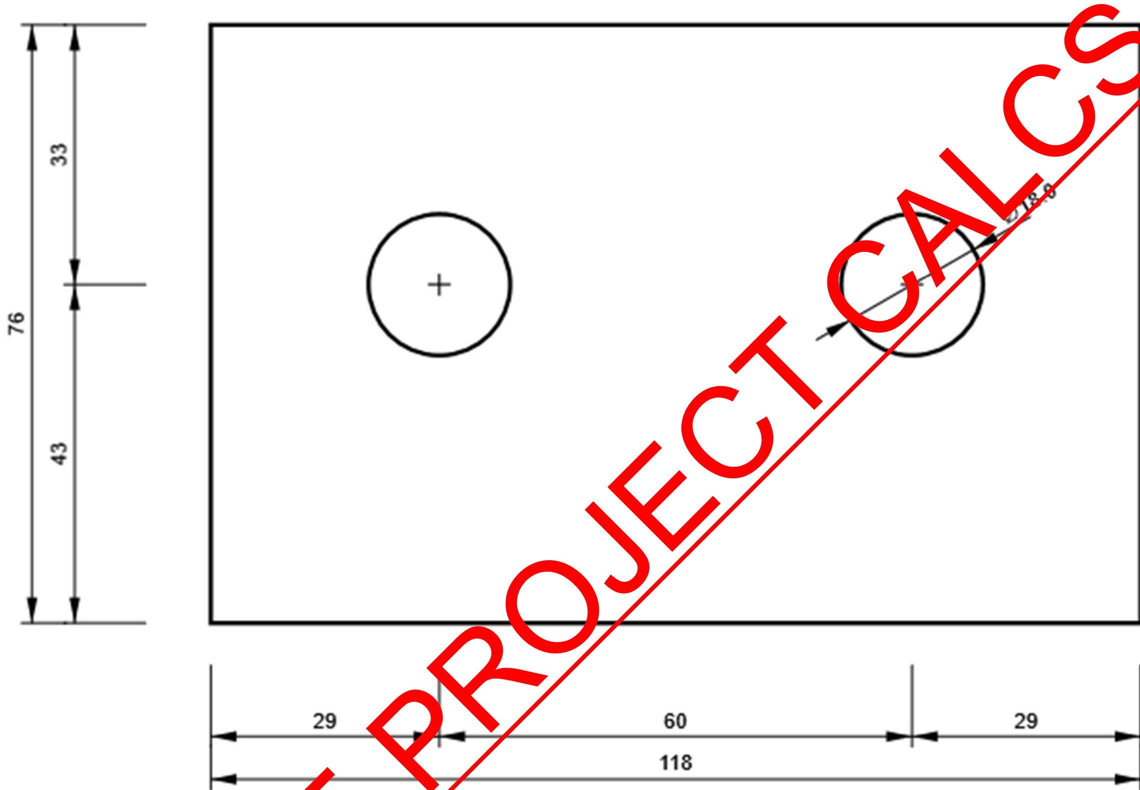

CLEAT2 a, L80X8 - Bottom flange 1:

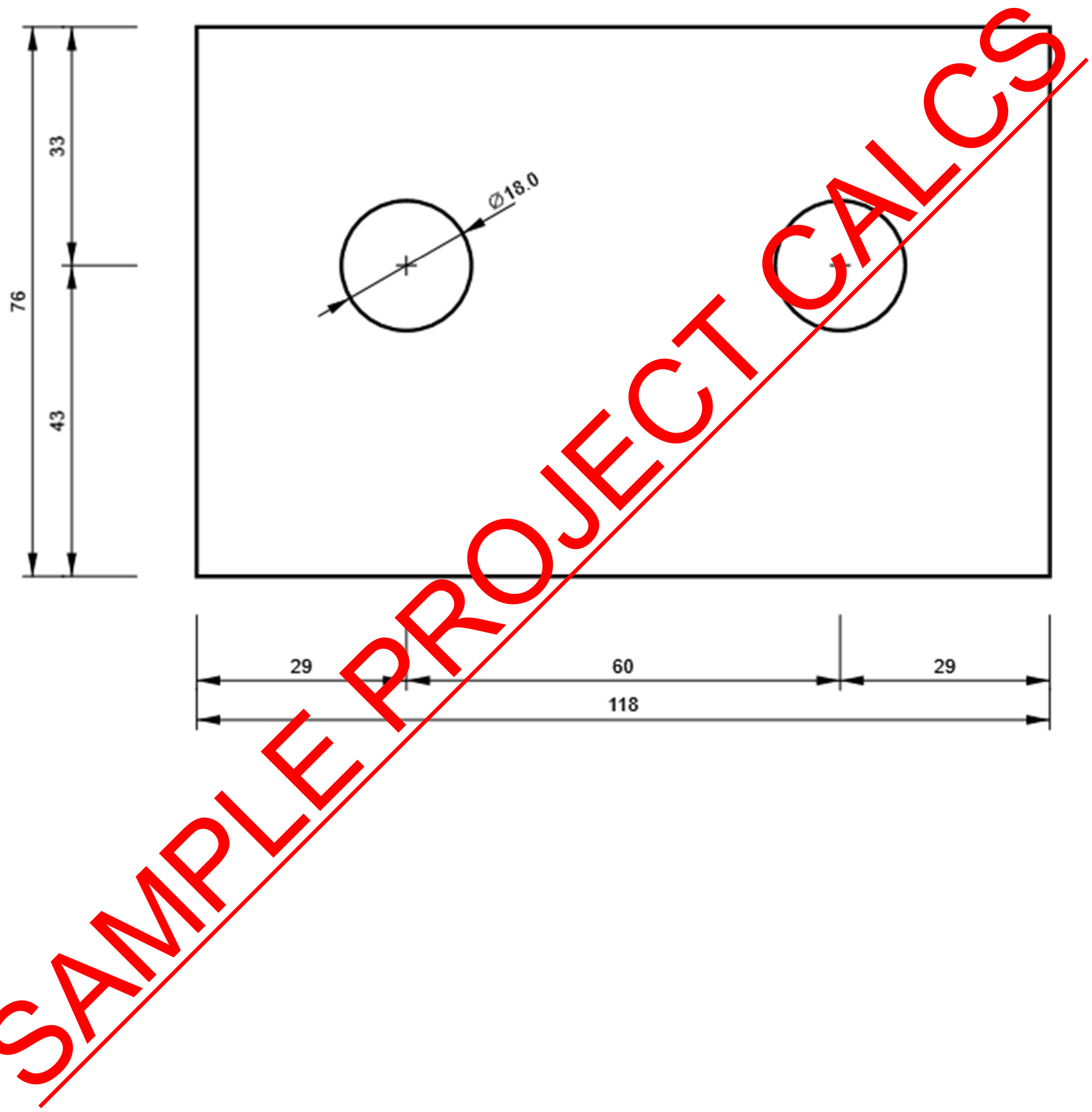

CLEAT2 a, L80X8 - Web 1:

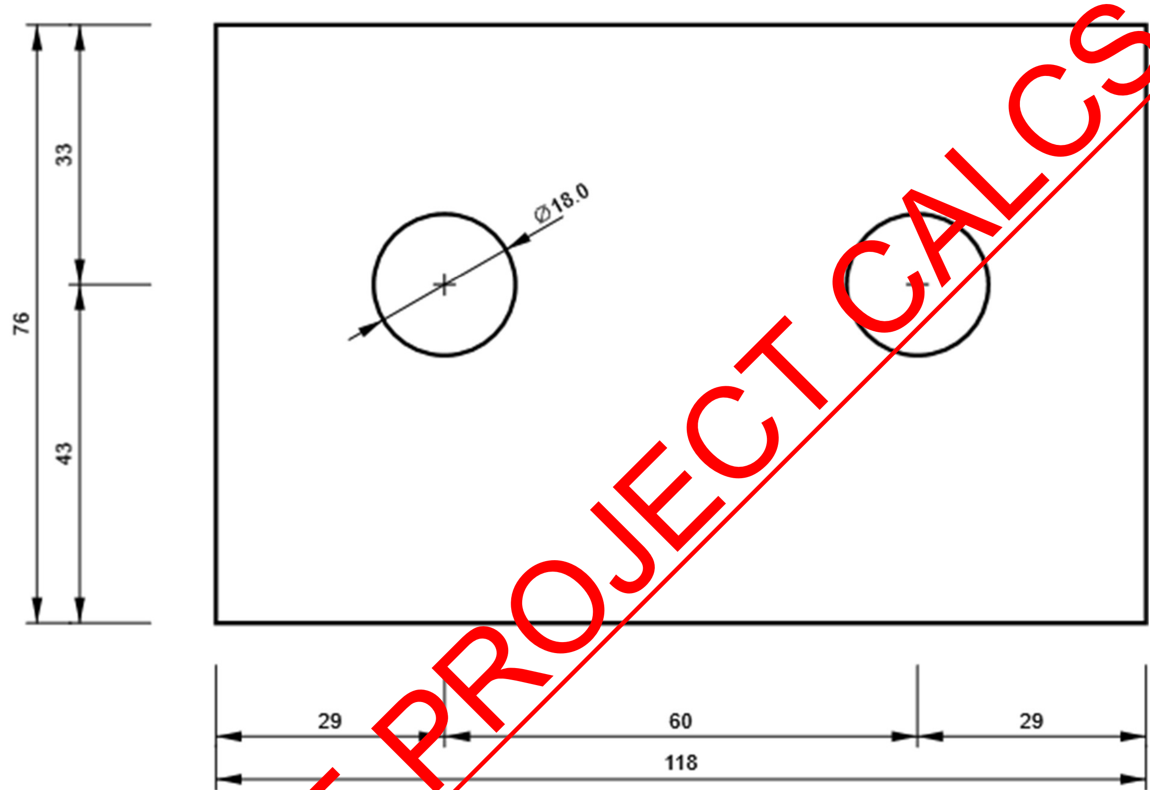

CLEAT2 b, L80X8 - Bottom flange 1:

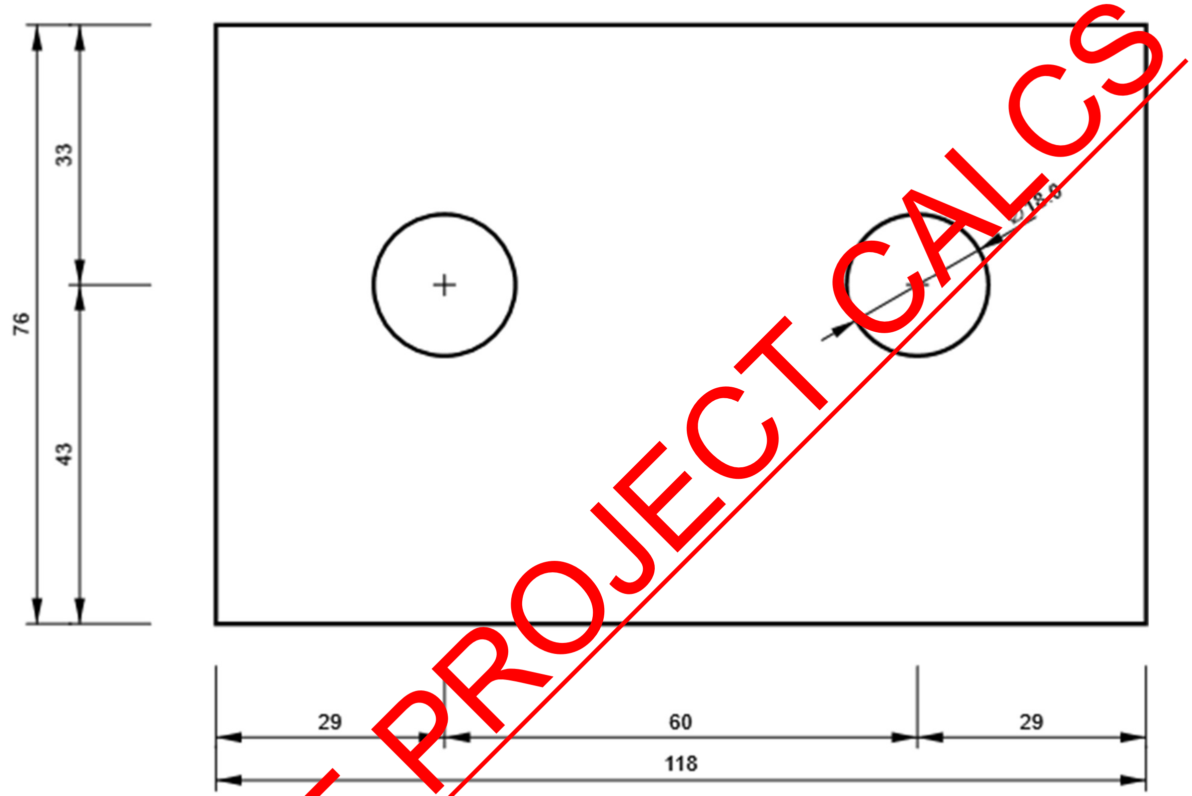

CLEAT2 b, L80X8 - Web 1:

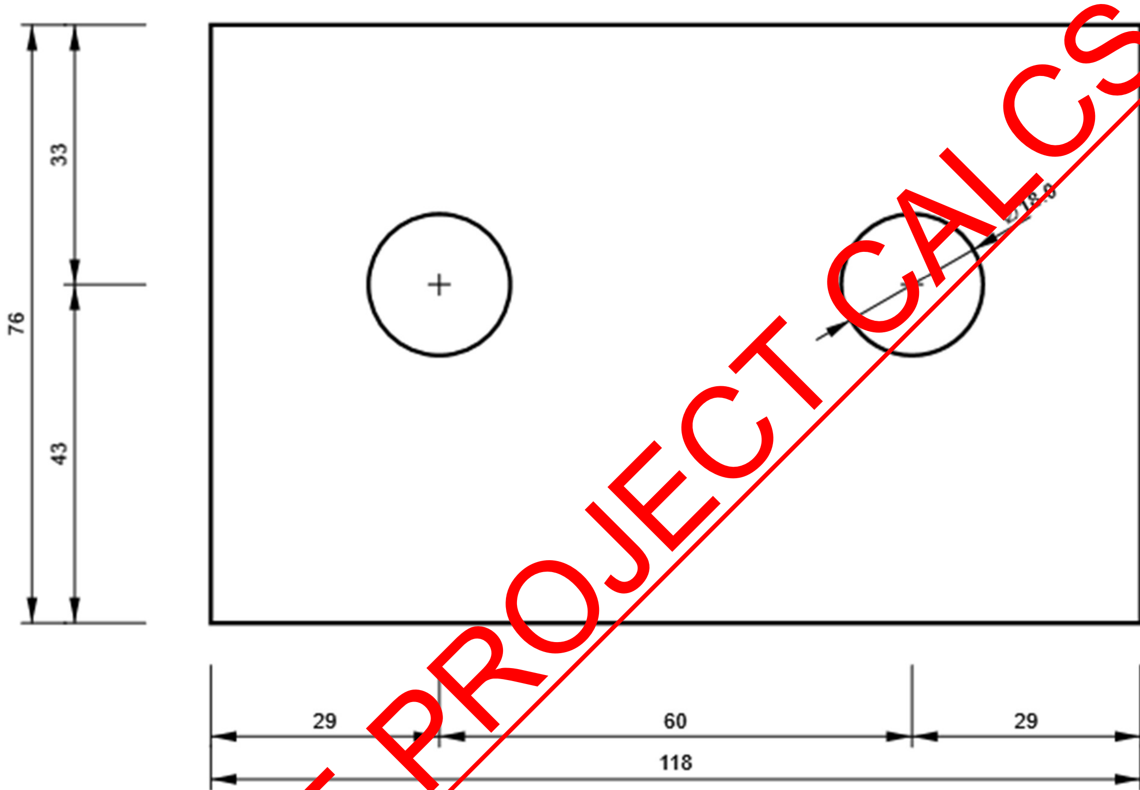

- **Connection-18**

Project data

Project name	
Project number	-
Author	
Description	CONNECTION - 18
Date	
Design code	EN

Material

Steel	S 275,
Concrete	C25/30

Project item Connection - 18

Design

Name	Connection - 18
Description	
Analysis	Stress, strain/ simplified loading

Beams and columns

Name	Cross-section	β – Direction [°]	γ - Pitch [°]	α - Rotation [°]	Offset ex [mm]	Offset ey [mm]	Offset ez [mm]	Forces in	X [mm]
M1	2 - UC 152 x 152 x 23	-90.0	0.0	0.0	0	0	0	Bolts	51
M2	2 - UC 152 x 152 x 23	0.0	0.0	0.0	0	0	0	Bolts	0

PEPP PEARL ENGINEERS, PLANNERS & PROJECT MANAGERS 02 TOWERFIELDS WESTERHAM ROAD BROMLEY, BR2 6HF Email: info@Pearlepp.co.uk Website: www. pearlepp.co.uk Tel no. 02035763199	**Project:** 68 GROVE PARK RD UK		**Sheet No./Rev.** 465
	Job Ref. 2024-06-	**Structural Engineer** **MM**	**Date** **11/06/2024**

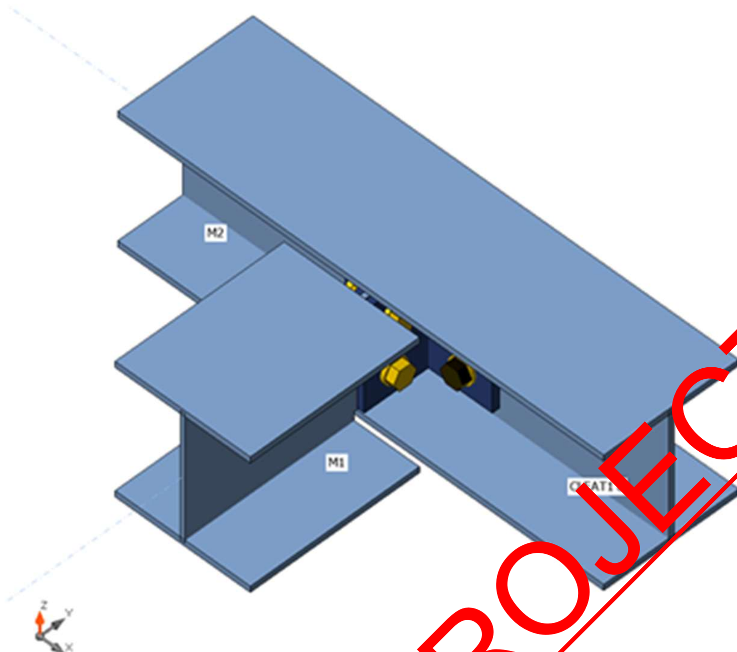

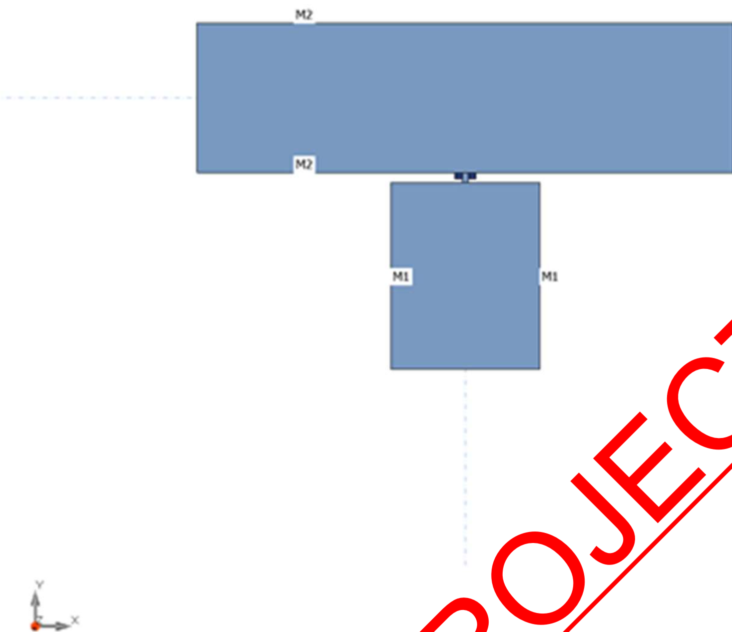

M2
M2
M1
M1
Y
X

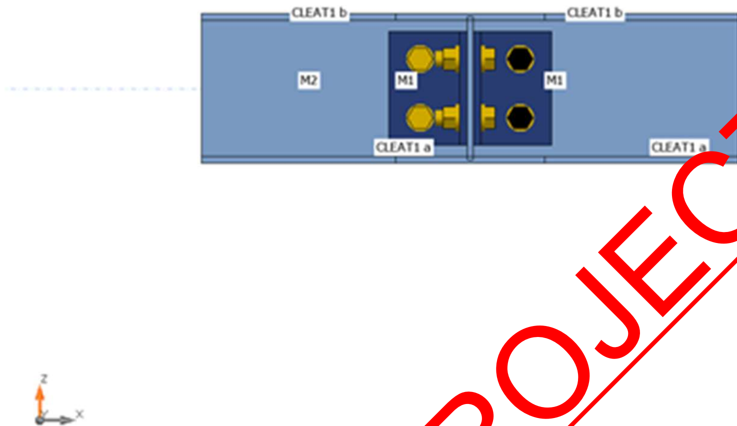
CLEAT1 b
CLEAT1 b
M2
M1
M1
CLEAT1 a
CLEAT1 a

PEPP PEARL ENGINEERS, PLANNERS & PROJECT MANAGERS 02 TOWERFIELDS WESTERHAM ROAD BROMLEY, BR2 6HF Email: info@Pearlepp.co.uk Website: www. pearlepp.co.uk Tel no. 02035763199	**Project:** 68 GROVE PARK RD UK	**Sheet No./Rev.** 468
	Job Ref. 2024-06- / **Structural Engineer** **MM**	**Date** **11/06/2024**

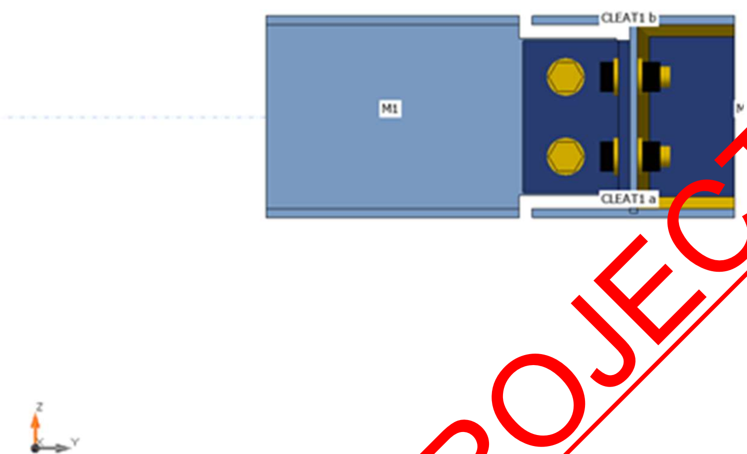

Cross-sections

Name	Material
2 - UC 152 x 152 x 23	S 355
3 - L80X8	S 355

Cross-sections

Name	Material	Drawing
2 - UC 152 x 152 x 23	S 355	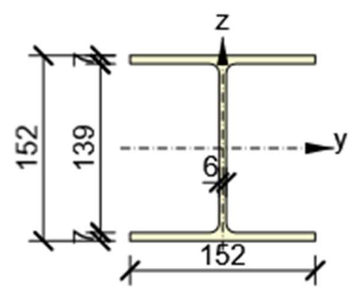

3 - L80X8	S 355	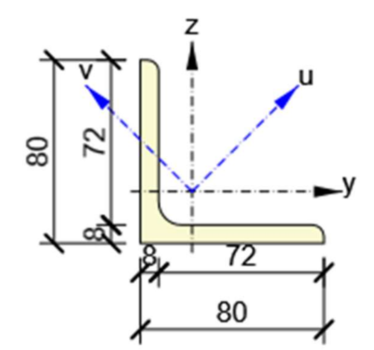

Bolts

Name	Bolt assembly	Diameter [mm]	fu [MPa]	Gross area [mm²]
M16 8.8	M16 8.8	16	800.0	201

Load effects (equilibrium not required)

Name	Member	N [kN]	Vy [kN]	Vz [kN]	Mx [kNm]	My [kNm]	Mz [kNm]
LE1	M1	0.0	0.0	50.0	0.0	0.5	0.0

Check

Summary

Name	Value	Status
Analysis	100.0%	OK
Plates	0.2 < 5.0%	OK
Bolts	53.6 < 100%	OK
Welds	33.8 < 100%	OK
Buckling	32.47	

Plates

Name	Thickness [mm]	Loads	σ_{Ed} [MPa]	ε_{Pl} [%]	σc_{Ed} [MPa]	Status
M1-bfl 1	6.8	LE1	72.5	0.0	0.0	OK
M1-tfl 1	6.8	LE1	72.4	0.0	0.0	OK
M1-w 1	5.8	LE1	298.5	0.0	69.1	OK
M2-bfl 1	6.8	LE1	205.7	0.0	0.0	OK
M2-tfl 1	6.8	LE1	246.9	0.0	0.0	OK

M2-w 1	5.8	LE1	355.4	0.2	328.9	OK
CLEAT1 a-bfl 1	8.0	LE1	355.1	0.0	118.5	OK
CLEAT1 a-w 1	8.0	LE1	355.2	0.1	118.5	OK
CLEAT1 b-bfl 1	8.0	LE1	355.1	0.0	328.9	OK
CLEAT1 b-w 1	8.0	LE1	355.2	0.1	328.9	OK
STIFF1	10.0	LE1	85.9	0.0	0.0	OK

Design data

Material	f_y [MPa]	ε_{lim} [%]
S 355	355.0	5.0

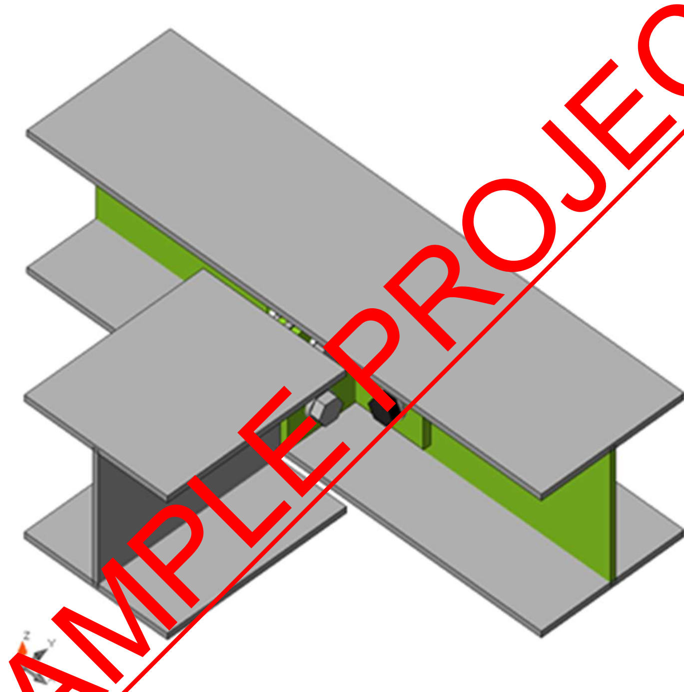

Overall check, LE1

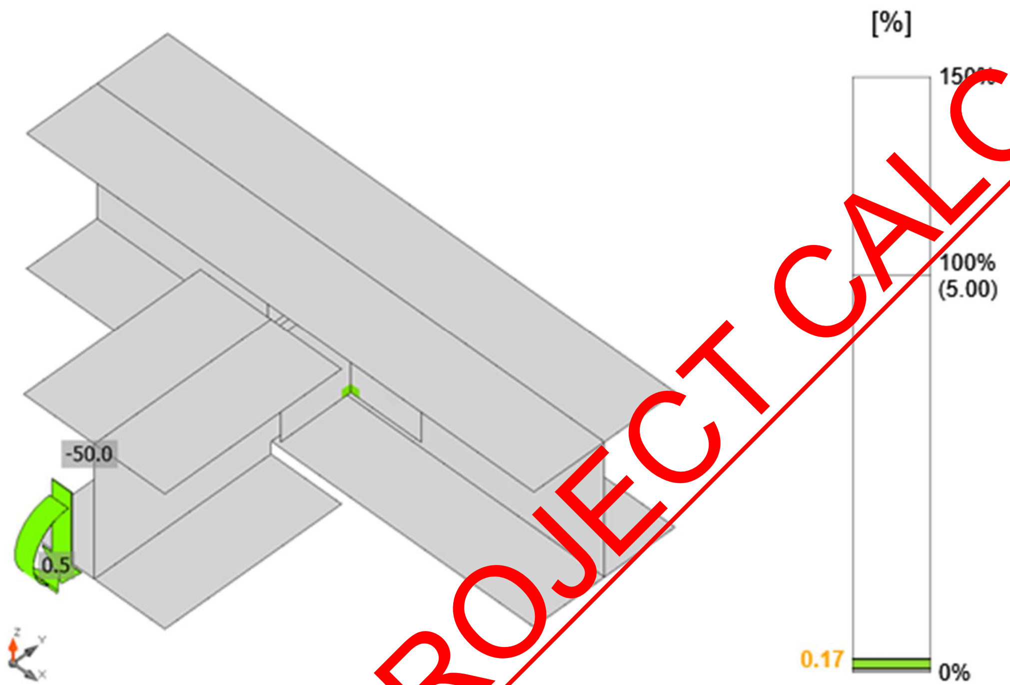

Strain check, LE1

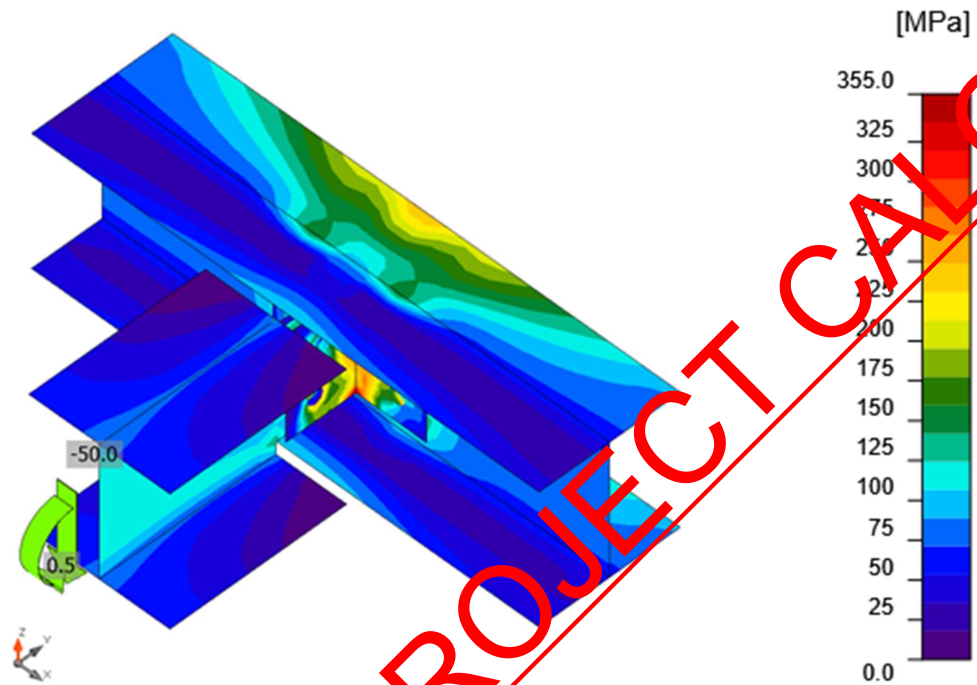

Equivalent stress, LE1

Bolts

	Name	Grade	Loads	$F_{t,Ed}$ [kN]	V [kN]	Ut_t [%]	$F_{b,Rd}$ [kN]	Ut_s [%]	Ut_{ts} [%]	Status
	B1	M16 8.8 - 1	LE1	17.1	13.5	19.0	78.3	33.9	35.9	OK
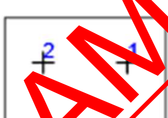	B2	M16 8.8 - 1	LE1	11.5	13.2	12.7	49.5	52.9	31.0	OK
	B3	M16 8.8 - 2	LE1	10.1	14.1	11.2	72.1	23.5	31.5	OK
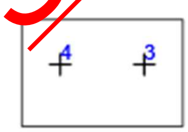	B4	M16 8.8 - 2	LE1	40.2	13.2	44.5	63.9	21.9	53.6	OK
	B5	M16 8.8 - 2	LE1	10.0	13.9	11.1	72.1	23.1	31.0	OK

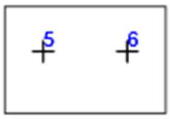	B6	M16 8.8 - 2	LE1	40.6	13.0	44.8	63.9	21.6	53.6	OK

Design data

Name	$F_{t,Rd}$ [kN]	$B_{p,Rd}$ [kN]	$F_{v,Rd}$ [kN]
M16 8.8 - 1	90.4	147.8	60.3
M16 8.8 - 2	90.4	107.1	60.3

Detailed result for B4

Tension resistance check (EN 1993-1-8 tab 3.4)

$$F_{t,Rd} = \frac{k_2 f_{ub} A_s}{\gamma_{M2}} = \quad 90.4 \quad \text{kN} \quad \geq \quad F_t = \quad 40.2 \quad \text{kN}$$

where:

$k_2 = 0.90$ – Factor

$f_{ub} = 800.0$ MPa – Ultimate tensile strength of the bolt

$A_s = 157$ mm^2 – Tensile stress area of the bolt

$\gamma_{M2} = 1.25$ – Safety factor

Punching resistance check (EN 1993-1-8 tab 3.4)

$$B_{p,Rd} = \frac{0.6 \pi d_m t_p f_u}{\gamma_{M2}} = \quad 107.1 \quad \text{kN} \quad \geq \quad F_t = \quad 40.2 \quad \text{kN}$$

where:

$d_m = 25$ mm – The mean of the across points and across flats dimensions of the bolt head or the nut, whichever is smaller

$t_p = 6$ mm – Thickness

$f_u = 490.0$ MPa – Ultimate strength

$\gamma_{M2} = 1.25$ – Safety factor

Shear resistance check (EN 1993-1-8 tab 3.4)

$$F_{v,Rd} = \frac{\beta_p \alpha_v f_{ub} A}{\gamma_{M2}} = \quad 60.3 \quad \text{kN} \quad \geq \quad V = \quad 13.2 \quad \text{kN}$$

where:

$\beta_p = 1.00$ – Reducing factor

$\alpha_v = 0.60$ – Reducing factor

$f_{ub} = 800.0$ MPa – Ultimate tensile strength of the bolt

$A =$ 157 mm^2 – Tensile stress area of the bolt

$\gamma_{M2} =$ 1.25 – Safety factor

Bearing resistance check (EN 1993-1-8 tab 3.4)

$F_{b,Rd} = \frac{k_1 \alpha_b f_u d t}{\gamma_{M2}} =$ 63.9 kN ≥ $V =$ 13.2 kN

where:

$k_1 = \min(2.8\frac{e_2}{d_0} - 1.7, 1.4\frac{p_2}{d_0} - 1.7, 2.5) =$ 2.50 – Factor for edge distance and bolt spacing perpendicular to the direction of load transfer

$\alpha_b = \min(\frac{e_1}{3d_0}, \frac{p_1}{3d_0} - \frac{1}{4}, \frac{f_{ub}}{f_u}, 1) =$ 0.51 – Factor for end distance and bolt spacing in direction of load transfer

$e_2 =$ 29 mm – Distance to the plate edge perpendicular to the shear force

$p_2 =$ ∞ mm – Distance between bolts perpendicular to the shear force

$d_0 =$ 18 mm – Bolt hole diameter

$e_1 =$ 28 mm – Distance to the plate edge in the direction of the shear force

$p_1 =$ ∞ mm – Distance between bolts in the direction of the shear force

$f_{ub} =$ 800.0 MPa – Ultimate tensile strength of the bolt

$f_u =$ 490.0 MPa – Ultimate strength

$d =$ 16 mm – Nominal diameter of the fastener

$t =$ 8 mm – Thickness of the plate

$\gamma_{M2} =$ 1.25 – Safety factor

Interaction of tension and shear (EN 1993-1-8 tab 3.4)

$U_{tts} = \frac{F_{v,Ed}}{F_{v,Rd}} + \frac{F_{t,Ed}}{1.4F_{t,Rd}} =$ 53.6 %

Utilization in tension

$U_t = \frac{F_{t,Ed}}{\min(F_{t,Rd}; B_{p,Rd})} =$ 44.5 %

Utilization in shear

$U_s = \frac{V_{Ed}}{\min(F_{v,Rd}; F_{b,Rd})} =$ 21.9 %

Welds (Plastic redistribution)

Item	Edge	Throat th. [mm]	Length [mm]	Loads	$\sigma_{w,Ed}$ [MPa]	ε_{Pl} [%]	$\sigma_{\perp}$ [MPa]	$\tau_{\parallel}$ [MPa]	$\tau_{\perp}$ [MPa]	Ut [%]	Ut_c [%]	Status
M2-bfl 1	STIFF 1	◢6.5 ◣	73	LE1	46.9	0.0	-10.9	22.9	-13.0	10.8	6.7	OK

		◢6.5 ◣	73	LE1	43.6	0.0	-12.0	-22.0	10.0	10.0	6.5	OK
M2-w 1	STIFF 1	◢6.5 ◣	139	LE1	147.3	0.0	-74.0	-21.2	-70.4	33.8	11.1	OK
		◢6.5 ◣	139	LE1	142.2	0.0	-65.9	21.3	69.6	32.7	10.9	OK
M2-tfl 1	STIFF 1	◢6.5 ◣	73	LE1	34.4	0.0	-8.3	17.4	-8.3	7.9	5.5	OK
		◢6.5 ◣	73	LE1	34.4	0.0	-8.4	-17.3	8.4	7.9	5.5	OK

Design data

	β_w [-]	$\sigma_{w,Rd}$ [MPa]	0.9 σ [MPa]
S 275	0.90	435.6	352.8

Detailed result for M2-w 1 STIFF1

Weld resistance check (EN 1993-1-8 4.5.3.2)

$\sigma_{w,Rd} = f_u/(\beta_w \gamma_{M2}) =$ 435.6 MPa ≥ $\sigma_{w,Ed} = [\sigma_\perp^2 + 3(\tau_\perp^2 + \tau_\parallel^2)]^{0.5} =$ 147.3 MPa

$\sigma_{\perp,Rd} = 0.9 f_u/\gamma_{M2} =$ 352.8 MPa ≥ $|\sigma_\perp| =$ 74.0 MPa

where:

$f_u =$ 490.0 MPa – Ultimate strength

$\beta_w =$ 0.90 – appropriate correlation factor taken from Table 4.1

$\gamma_{M2} =$ 1.25 – Safety factor

Stress utilization

$U_t = \max(\frac{\sigma_{w,Ed}}{\sigma_{w,Rd}}; \frac{|\sigma_\perp|}{\sigma_{\perp,Rd}}) =$ 33.8 %

Buckling

Loads	Shape	Factor [-]
LE1	1	32.47
	2	39.89
	3	50.79
	4	51.75
	5	52.48
	6	57.49

PEPP PEARL ENGINEERS, PLANNERS & PROJECT MANAGERS 02 TOWERFIELDS WESTERHAM ROAD BROMLEY, BR2 6HF Email: info@Pearlepp.co.uk Website: www. pearlepp.co.uk Tel no. 02035763199	**Project:** 68 GROVE PARK RD UK	**Sheet No./Rev.** 476
	Job Ref. 2024-06- | **Structural Engineer** **MM**	**Date** **11/06/2024**

Bill of material

Manufacturing operations

Name	Plates [mm]	Shape	Nr.	Welds [mm]	Length [mm]	Bolts	Nr.
CUT1							
STIFF1	P10.0x73.2-138.8 (S 275)		1	Double fillet: a = 6.5	285.2		

Welds

Type	Material	Throat thickness [mm]	Leg size [mm]	Length [mm]
Double fillet	S 275	6.5	9.2	285.2

Bolts

Name	Grip length [mm]	Count
M16 8.8	22	2
M16 8.8	14	4

Drawing

STIFF1

P10.0x139-73 (S 355)

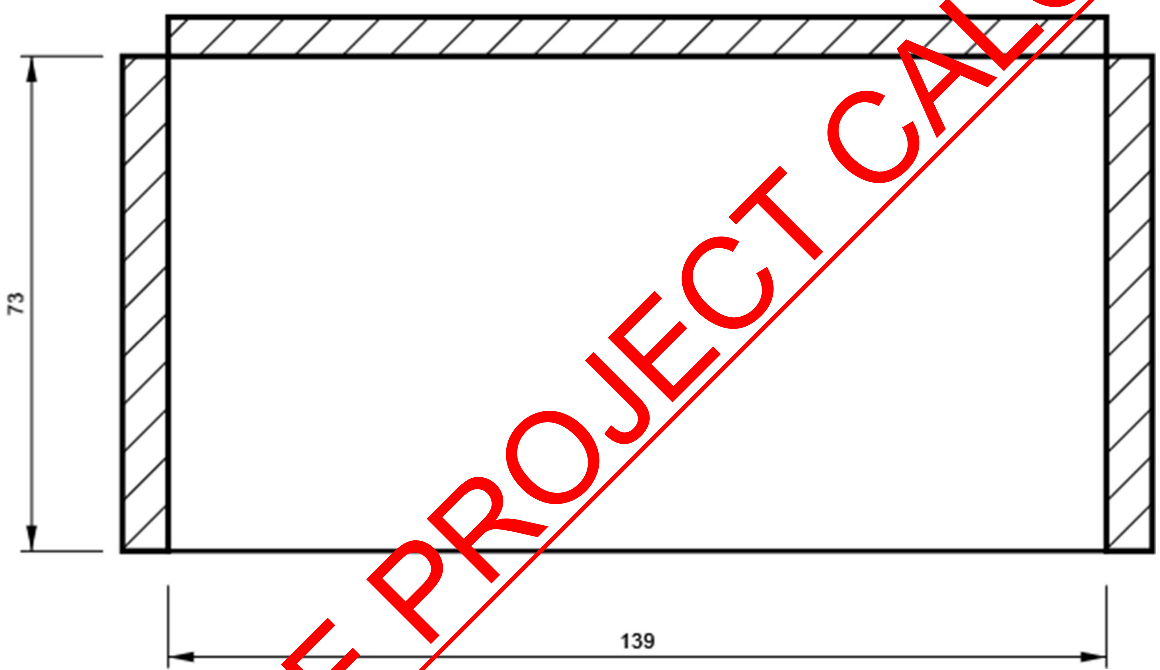

M1, UC 152 x 152 x 23 - Web 1:

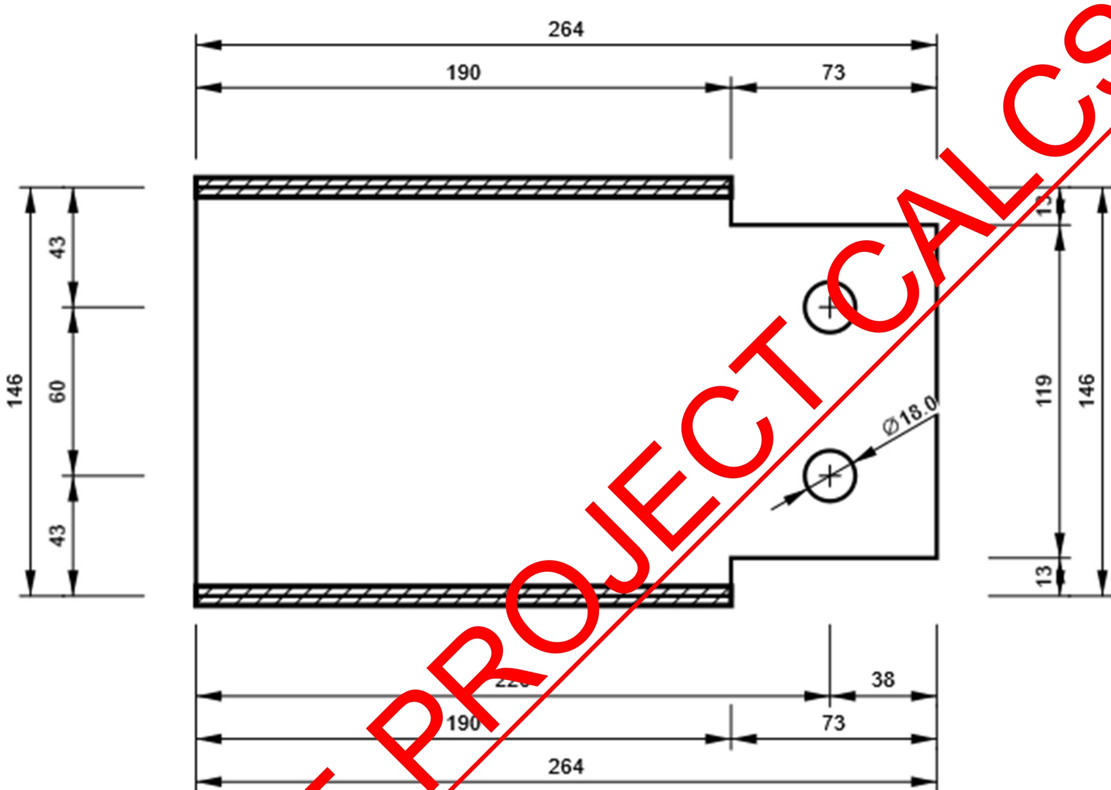

M2, UC 152 x 152 x 23 - Web 1:

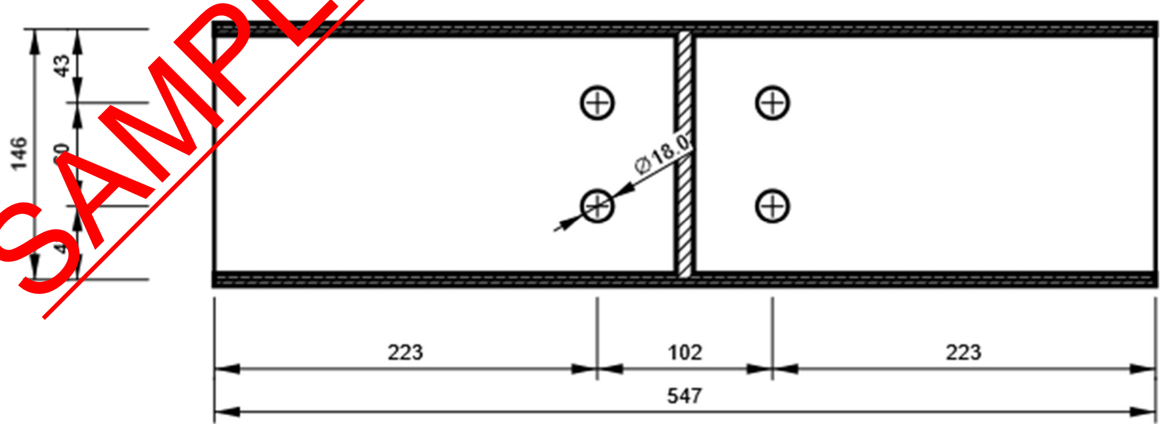

PEPP
PEARL ENGINEERS, PLANNERS & PROJECT MANAGERS
02 TOWERFIELDS WESTERHAM ROAD
BROMLEY, BR2 6HF
Email: info@Pearlepp.co.uk
Website: www. pearlepp.co.uk
Tel no. 02035763199

Project: 68 GROVE PARK RD UK		**Sheet No./Rev.** 479
Job Ref. 2024-06-	**Structural Engineer** **MM**	**Date** **11/06/2024**

CLEAT1 a, L80X8 - Bottom flange 1:

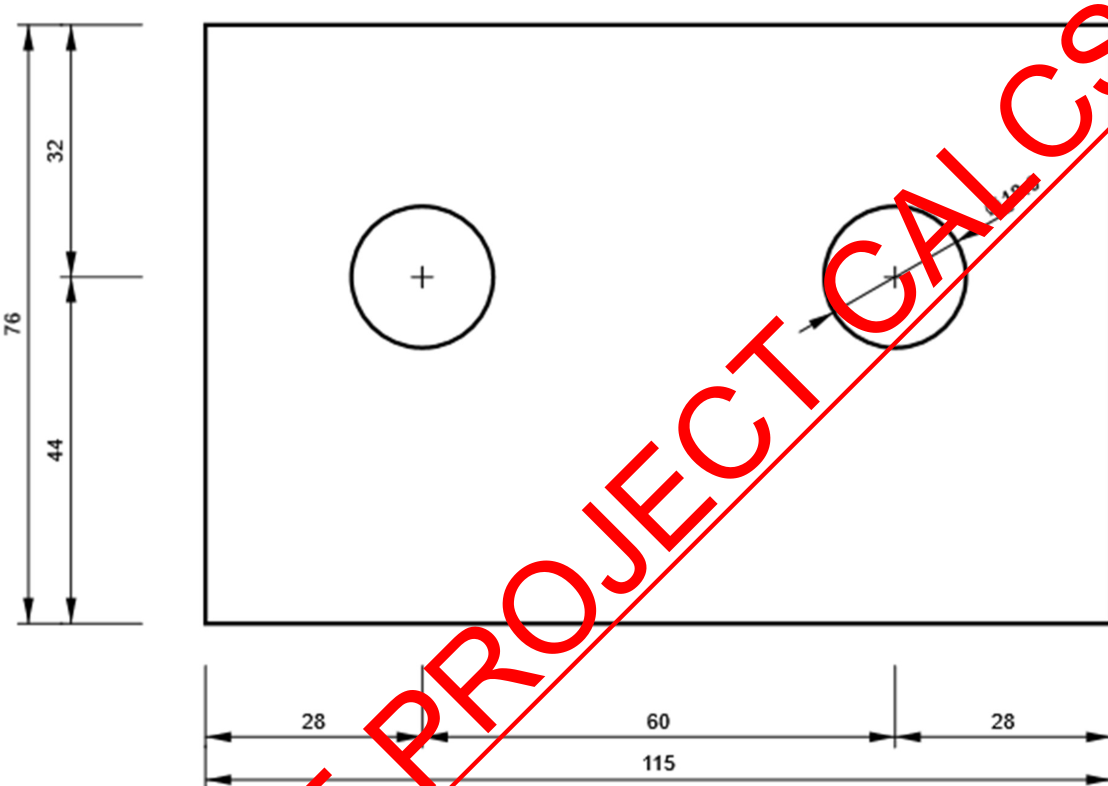

CLEAT1 a, L80X8 - Web 1:

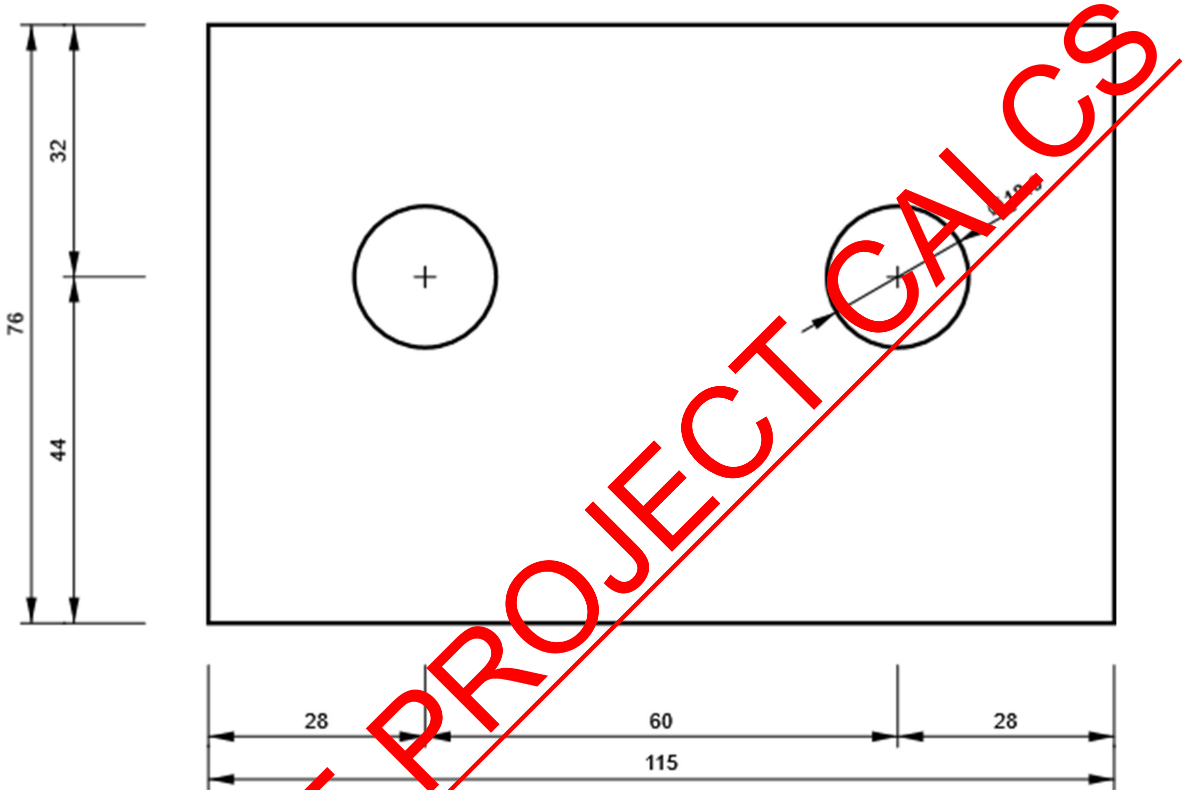

CLEAT1 b, L80X8 - Bottom flange 1:

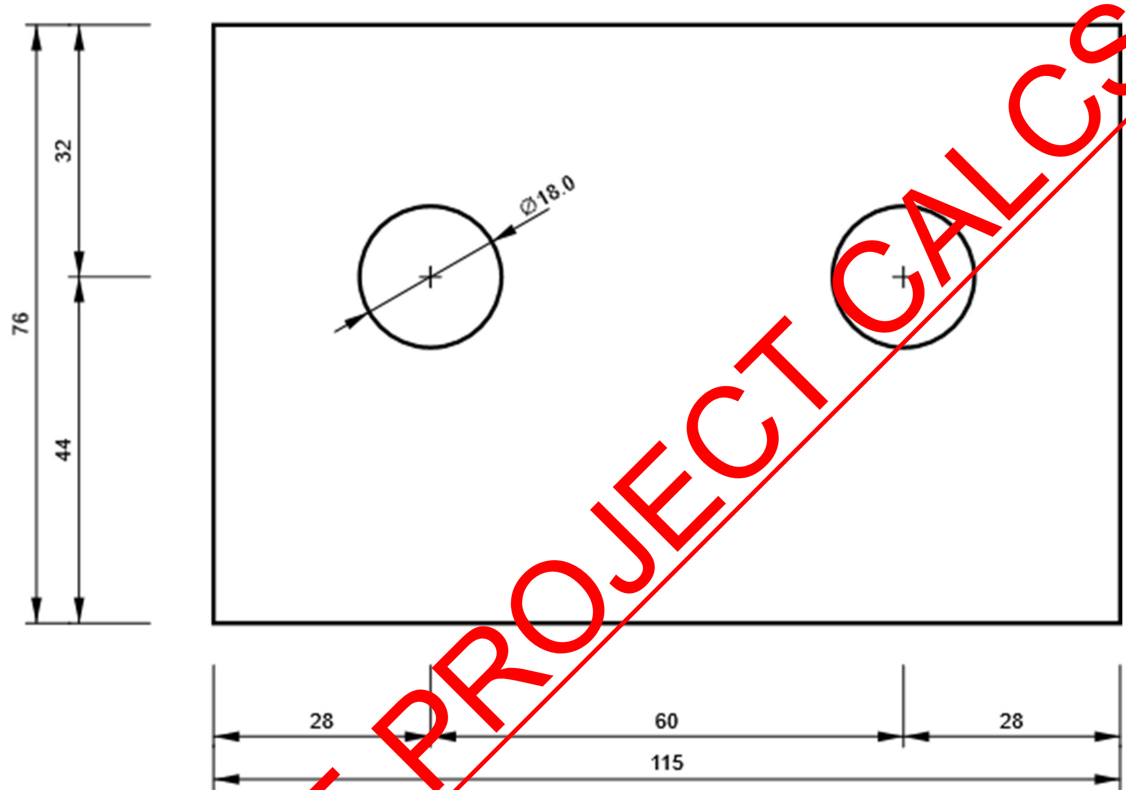

CLEAT1 b, L80X8 - Web 1:

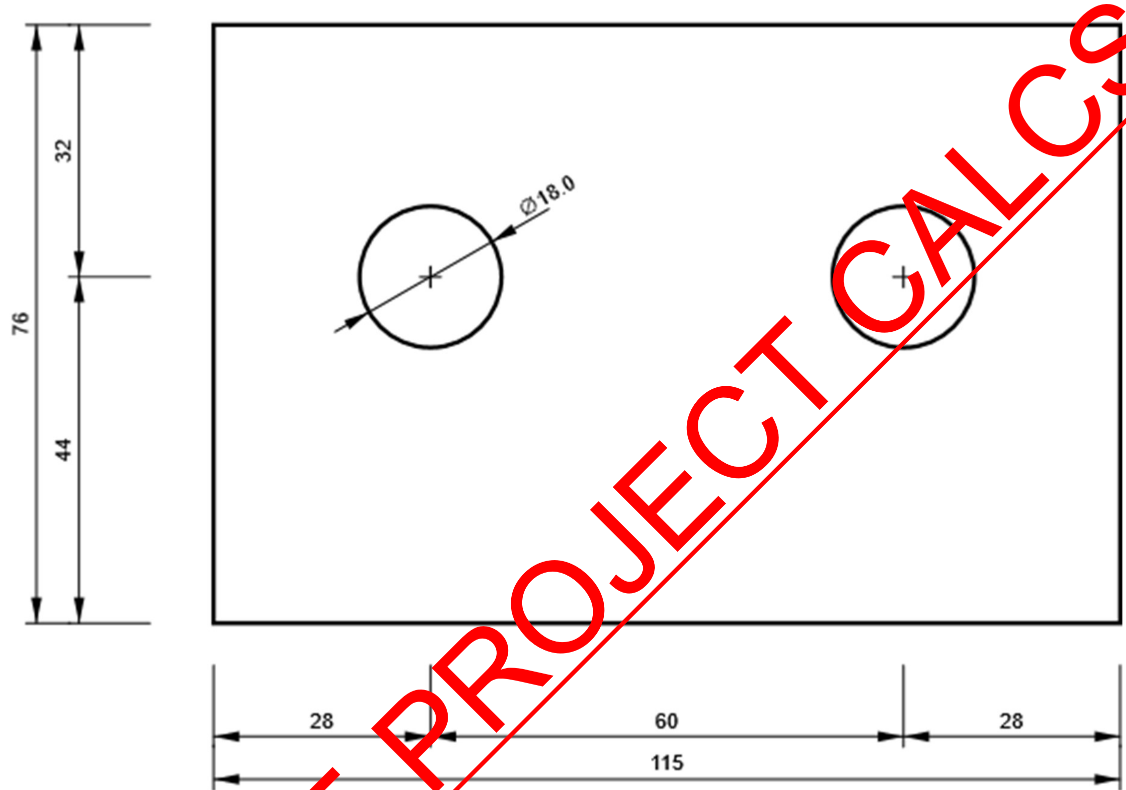

- **Connection-19**

Project data

Project name	
Project number	-
Author	
Description	CONNECTION - 19
Date	
Design code	EN

Material

Steel	S 275,
Concrete	C25/30

Project item Connection - 19

Design

Name	Connection - 19
Description	
Analysis	Stress, strain/ simplified loading

Beams and columns

Name	Cross-section	β – Direction [°]	γ - Pitch [°]	α - Rotation [°]	Offset ex [mm]	Offset ey [mm]	Offset ez [mm]	Forces in	X [mm]
M1	1 - UC 152 x 152 x 23	-90.0	0.0	0.0	0	0	25	Bolts	57
M2	2 - UC 203 x 203 x 46	0.0	0.0	0.0	0	0	0	Bolts	0
M3	1 - UC 152 x 152 x 23	90.0	0.0	0.0	0	0	25	Bolts	57

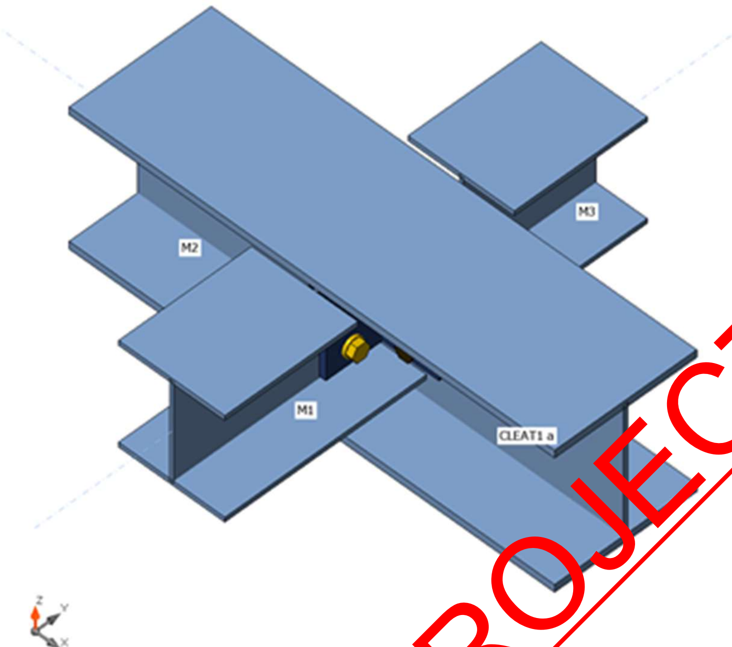
M2
M3
M1
CLEAT1 a

PEPP PEARL ENGINEERS, PLANNERS & PROJECT MANAGERS	**Project:** 68 GROVE PARK RD UK		**Sheet No./Rev.** 485
02 TOWERFIELDS WESTERHAM ROAD BROMLEY, BR2 6HF Email: info@Pearlepp.co.uk Website: www. pearlepp.co.uk Tel no. 02035763199	**Job Ref. 2024-06-**	**Structural Engineer** **MM**	**Date** **11/06/2024**

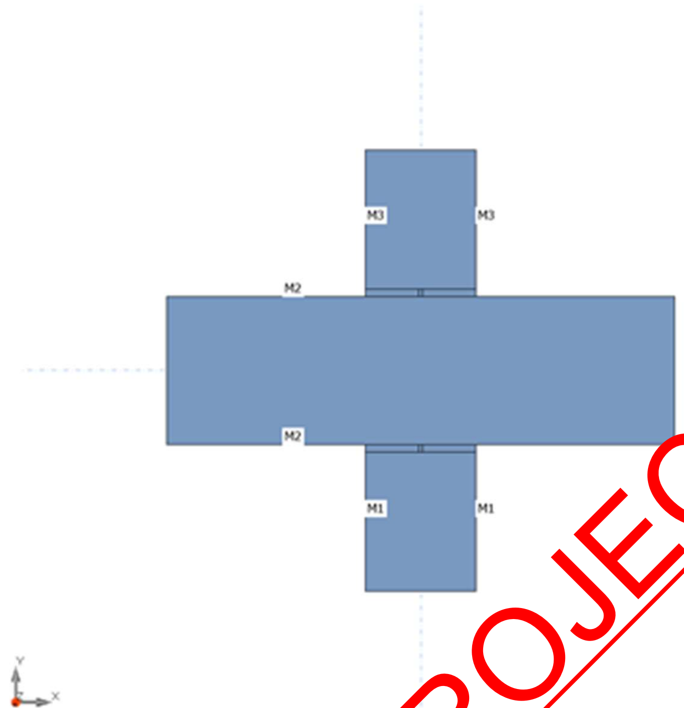

PEPP PEARL ENGINEERS, PLANNERS & PROJECT MANAGERS	**Project:** 68 GROVE PARK RD UK	**Sheet No./Rev.** 486

02 TOWERFIELDS WESTERHAM ROAD
BROMLEY, BR2 6HF
Email: info@Pearlepp.co.uk
Website: www. pearlepp.co.uk
Tel no. 02035763199

Job Ref. 2024-06-	**Structural Engineer** **MM**	**Date** **11/06/2024**

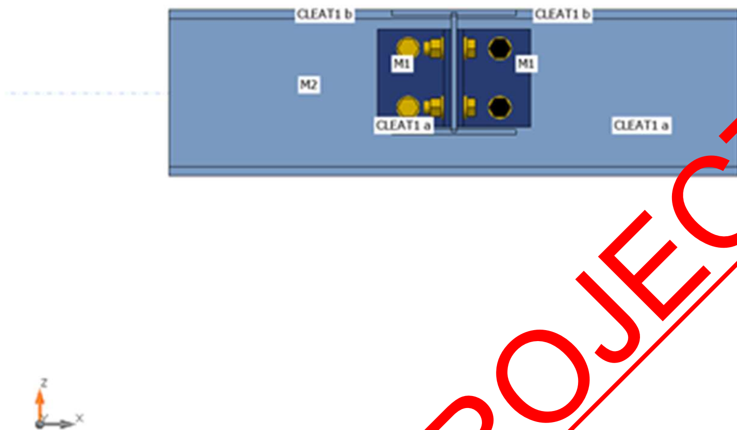

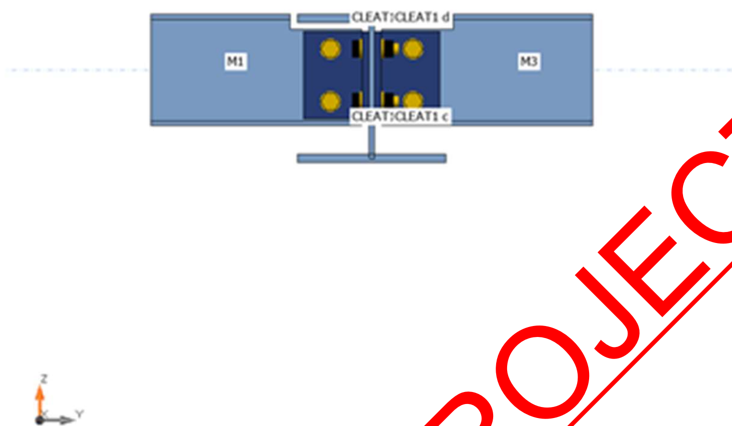

Cross-sections

Name	Material
1 - UC 152 x 152 x 23	S 275
2 - UC 203 x 203 x 46	S 275
3 - L90X9	S 275

Cross-sections

Name	Material	Drawing

PEPP PEARL ENGINEERS, PLANNERS & PROJECT MANAGERS 02 TOWERFIELDS WESTERHAM ROAD BROMLEY, BR2 6HF Email: info@Pearlepp.co.uk Website: www. pearlepp.co.uk Tel no. 02035763199	**Project:** 68 GROVE PARK RD UK		**Sheet No./Rev.** 488
	Job Ref. 2024-06-	**Structural Engineer** **MM**	**Date** **11/06/2024**

1 - UC 152 x 152 x 23	S 275	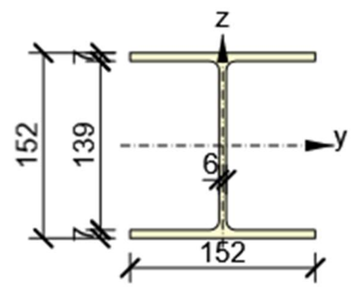
2 - UC 203 x 203 x 46	S 275	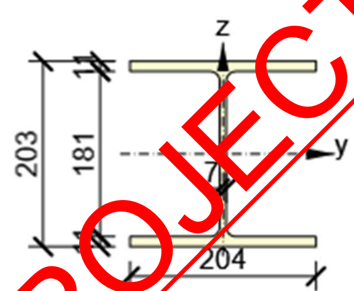
3 - L90X9	S 275	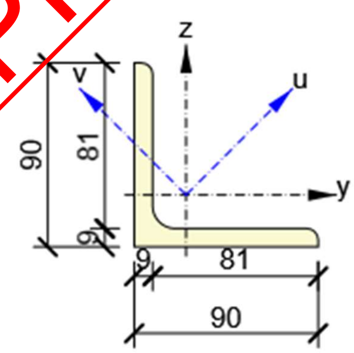

Bolts

Name	Bolt assembly	Diameter [mm]	fu [MPa]	Gross area [mm^2]
M16 8.8	M16 8.8	16	800.0	201

Load effects (equilibrium not required)

Name	Member	N [kN]	Vy [kN]	Vz [kN]	Mx [kNm]	My [kNm]	Mz [kNm]

PEPP PEARL ENGINEERS, PLANNERS & PROJECT MANAGERS 02 TOWERFIELDS WESTERHAM ROAD BROMLEY, BR2 6HF Email: info@Pearlepp.co.uk Website: www. pearlepp.co.uk Tel no. 02035763199	**Project:** 68 GROVE PARK RD UK	**Sheet No./Rev.** 489
	Job Ref. 2024-06- / **Structural Engineer** **MM**	**Date** **11/06/2024**

LE1	M1	0.0	0.0	-50.0	0.0	0.5	0.0
	M3	0.0	0.0	-50.0	0.0	0.5	0.0

Check

Summary

Name	Value	Status
Analysis	100.0%	OK
Plates	0.1 < 5.0%	OK
Bolts	65.2 < 100%	OK
Buckling	27.67	

Plates

Name	Material	Thickness [mm]	Loads	σ_{Ed} [MPa]	ε_{Pl} [%]	σc_{Ed} [MPa]	Status
M1-bfl 1	S 275	6.8	LE1	76.6	0.0	0.0	OK
M1-tfl 1	S 275	6.8	LE1	78.5	0.0	0.0	OK
M1-w 1	S 275	5.8	LE1	269.3	0.0	64.1	OK
M2-bfl 1	S 275	11.0	LE1	70.9	0.0	0.0	OK
M2-tfl 1	S 275	11.0	LE1	69.7	0.0	0.0	OK
M2-w 1	S 275	7.2	LE1	231.8	0.0	233.8	OK
M3-bfl 1	S 275	6.8	LE1	76.6	0.0	0.0	OK
M3-tfl 1	S 275	6.8	LE1	78.5	0.0	0.0	OK
M3-w 1	S 275	5.8	LE1	269.3	0.0	64.1	OK
CLEAT1 a-bfl 1	S 355	9.0	LE1	355.1	0.1	233.8	OK
CLEAT1 a-w 1	S 355	9.0	LE1	355.1	0.0	233.8	OK
CLEAT1 b-bfl 1	S 355	9.0	LE1	355.1	0.1	228.5	OK
CLEAT1 b-w 1	S 355	9.0	LE1	355.1	0.0	228.5	OK
CLEAT1 c-bfl 1	S 355	9.0	LE1	355.1	0.1	228.5	OK
CLEAT1 c-w 1	S 355	9.0	LE1	355.1	0.0	228.5	OK
CLEAT1 d-bfl 1	S 355	9.0	LE1	355.1	0.1	233.8	OK
CLEAT1 d-w 1	S 355	9.0	LE1	355.1	0.0	233.8	OK

Design data

Material	f_y [MPa]	ε_{lim} [%]
S 275	275.0	5.0
S 355	355.0	5.0

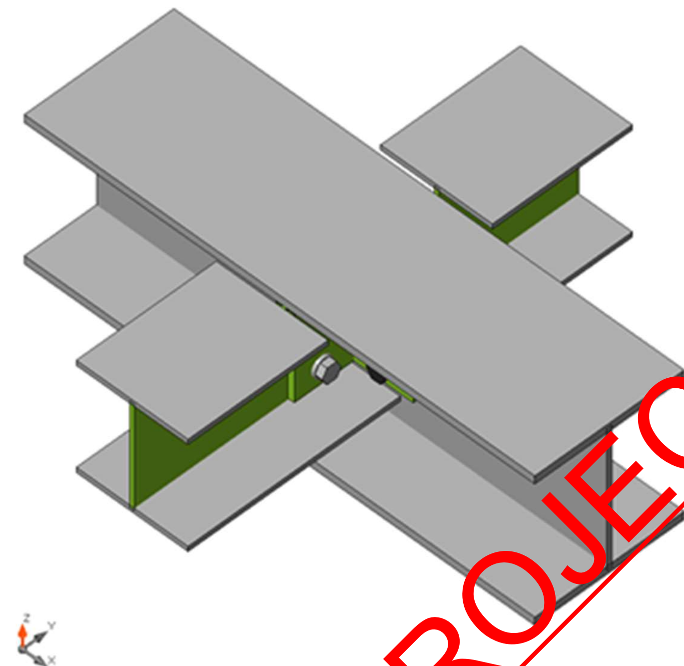

Overall check, LE1

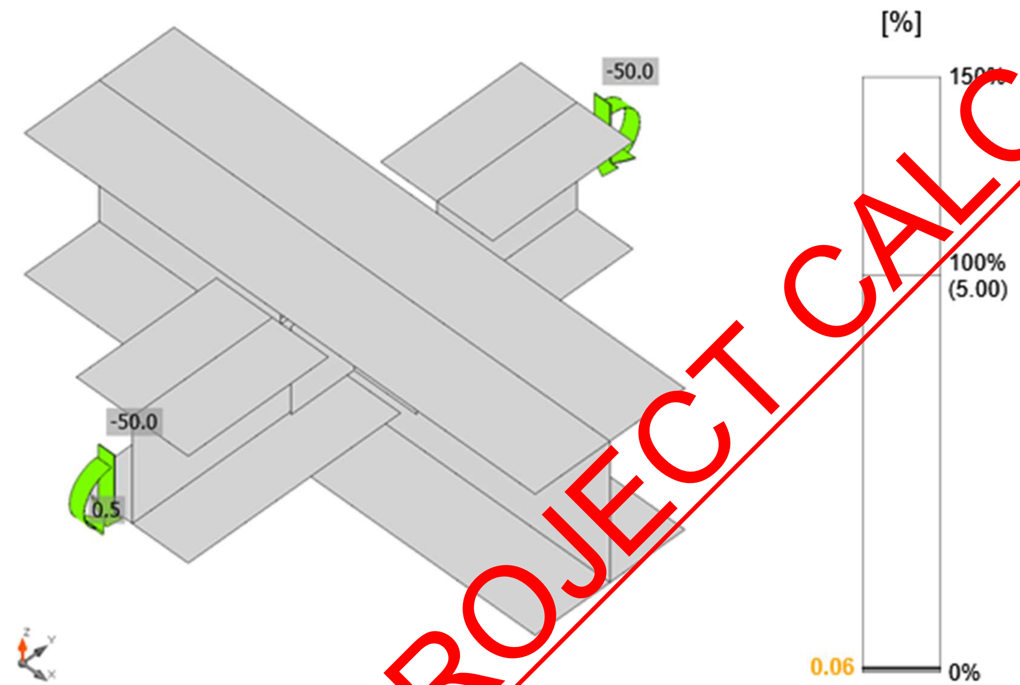

Strain check, LE1

PEPP PEARL ENGINEERS, PLANNERS & PROJECT MANAGERS 02 TOWERFIELDS WESTERHAM ROAD BROMLEY, BR2 6HF Email: info@Pearlepp.co.uk Website: www. pearlepp.co.uk Tel no. 02035763199	**Project:** 68 GROVE PARK RD UK		**Sheet No./Rev.** 492
	Job Ref. 2024-06-	**Structural Engineer** **MM**	**Date** **11/06/2024**

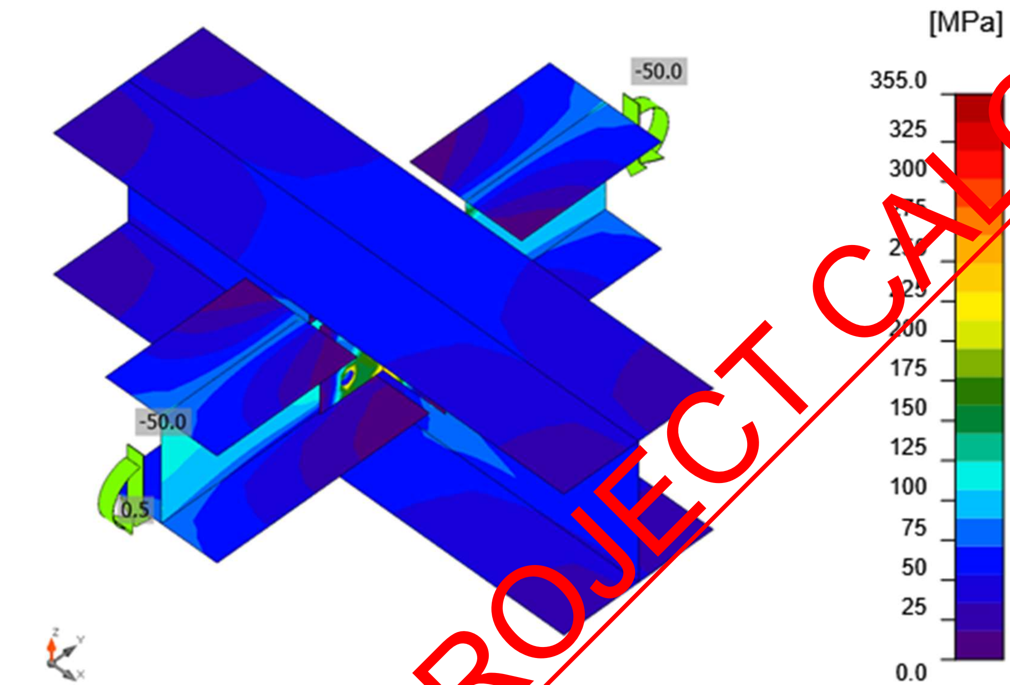

Equivalent stress, LE1

Bolts

	Name	Loads	$F_{t,Ed}$ [kN]	V [kN]	Ut_t [%]	$F_{b,Rd}$ [kN]	Ut_s [%]	Ut_{ts} [%]	Status
	B1	LE1	15.4	13.1	17.0	79.8	32.9	34.0	OK
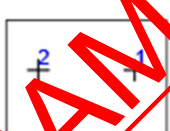	B2	LE1	10.7	12.8	11.9	39.3	65.2	29.7	OK
	B3	LE1	15.4	13.1	17.0	79.8	32.9	34.0	OK
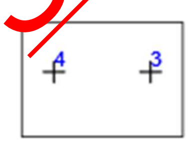	B4	LE1	10.7	12.8	11.9	39.3	65.2	29.7	OK
	B5	LE1	10.0	14.4	11.0	99.1	29.1	31.8	OK

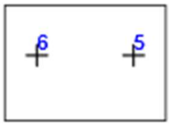	B6	LE1	32.4	12.6	35.8	99.1	25.4	46.4	OK
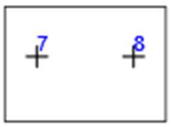	B7	LE1	10.1	14.4	11.2	99.1	29.1	31.9	OK
	B8	LE1	32.4	12.6	35.9	99.1	25.4	46.5	OK

Design data

Name	$F_{t,Rd}$ [kN]	$B_{p,Rd}$ [kN]	$F_{v,Rd}$ [kN]
M16 8.8 - 1	90.4	166.3	60.3

Detailed result for B2

Tension resistance check (EN 1993-1-8 tab 3.4)

$$F_{t,Rd} = \frac{k_2 f_{ub} A_s}{\gamma_{M2}} = \quad 90.4 \text{ kN} \geq F_t = \quad 10.7 \text{ kN}$$

where:

$k_2 = 0.90$ – Factor

$f_{ub} = 800.0$ MPa – Ultimate tensile strength of the bolt

$A_s = 157$ mm^2 – Tensile stress area of the bolt

$\gamma_{M2} = 1.25$ – Safety factor

Punching resistance check (EN 1993-1-8 tab 3.4)

$$B_{p,Rd} = \frac{0.6 \pi d_m t_p f_u}{\gamma_{M2}} = \quad 166.3 \text{ kN} \geq F_t = \quad 10.7 \text{ kN}$$

where:

$d_m = 25$ mm – The mean of the across points and across flats dimensions of the bolt head or the nut, whichever is smaller

$t_p = 9$ mm – Thickness

$f_u = 490.0$ MPa – Ultimate strength

$\gamma_{M2} = 1.25$ – Safety factor

Shear resistance check (EN 1993-1-8 tab 3.4)

$$F_{v,Rd} = \frac{\beta_p \alpha_v f_{ub} A}{\gamma_{M2}} = \quad 60.3 \text{ kN} \geq V = \quad 12.8 \text{ kN}$$

where:

PEPP PEARL ENGINEERS, PLANNERS & PROJECT MANAGERS 02 TOWERFIELDS WESTERHAM ROAD BROMLEY, BR2 6HF Email: info@Pearlepp.co.uk Website: www. pearlepp.co.uk Tel no. 02035763199	**Project:** 68 GROVE PARK RD UK **Job Ref. 2024-06-**	**Structural Engineer** **MM**	**Sheet No./Rev.** 494 **Date 11/06/2024**

$\beta_p = 1.00$ – Reducing factor

$\alpha_v = 0.60$ – Reducing factor

$f_{ub} = 800.0$ MPa – Ultimate tensile strength of the bolt

$A = 157$ mm^2 – Tensile stress area of the bolt

$\gamma_{M2} = 1.25$ – Safety factor

Bearing resistance check (EN 1993-1-8 tab 3.4)

$F_{b,Rd} = \frac{k_1 \alpha_b f_u d t}{\gamma_{M2}} =$ 39.3 kN $\geq$ $V =$ 25.6 kN

where:

$k_1 = \min(2.8\frac{e_2}{d_0} - 1.7, 1.4\frac{p_2}{d_0} - 1.7, 2.5) = 2.50$ – Factor for edge distance and bolt spacing perpendicular to the direction of load transfer

$\alpha_b = \min(\frac{e_1}{3d_0}, \frac{p_1}{3d_0} - \frac{1}{4}, \frac{f_{ub}}{f_u}, 1) = 0.49$ – Factor for end distance and bolt spacing in direction of load transfer

$e_2 = 27$ mm – Distance to the plate edge perpendicular to the shear force

$p_2 = \infty$ mm – Distance between bolts perpendicular to the shear force

$d_0 = 18$ mm – Bolt hole diameter

$e_1 = 27$ mm – Distance to the plate edge in the direction of the shear force

$p_1 = \infty$ mm – Distance between bolts in the direction of the shear force

$f_{ub} = 800.0$ MPa – Ultimate tensile strength of the bolt

$f_u = 430.0$ MPa – Ultimate strength

$d = 16$ mm – Nominal diameter of the fastener

$t =$ [illegible] mm – Thickness of the plate

$\gamma_{M2} = 1.25$ – Safety factor

Interaction of tension and shear (EN 1993-1-8 tab 3.4)

$U_{tt} = \frac{F_{v,Ed}}{F_{v,Rd}} + \frac{F_{t,Ed}}{1.4F_{t,Rd}} =$ 29.7 %

Utilization in tension

$U_{tt} = \frac{F_{t,Ed}}{\min(F_{t,Rd};B_{p,Rd})} =$ 11.9 %

Utilization in shear

$U_{ts} = \frac{V_{Ed}}{\min(F_{v,Rd};F_{b,Rd})} =$ 65.2 %

PEPP
PEARL ENGINEERS, PLANNERS & PROJECT MANAGERS
02 TOWERFIELDS WESTERHAM ROAD
BROMLEY, BR2 6HF
Email: info@Pearlepp.co.uk
Website: www. pearlepp.co.uk
Tel no. 02035763199

Buckling

Loads	Shape	Factor [-]
LE1	1	27.67
	2	27.74
	3	33.21
	4	33.42
	5	40.62
	6	40.86

Bill of material

Manufacturing operations

Name	Plates [mm]	Shape	Nr.	Welds [mm]	Length [mm]	Bolts	Nr.
CUT1							
CUT2							

Bolts

Name	Grip length [mm]	Count
M16 8.8	24	4
M16 8.8	23	4

PEPP
PEARL ENGINEERS, PLANNERS & PROJECT MANAGERS
02 TOWERFIELDS WESTERHAM ROAD
BROMLEY, BR2 6HF
Email: info@Pearlepp.co.uk
Website: www. pearlepp.co.uk
Tel no. 02035763199

Project: 68 GROVE PARK RD UK		**Sheet No./Rev.** 496
Job Ref. 2024-06-	**Structural Engineer** **MM**	**Date** **11/06/2024**

Drawing

M1, UC 152 x 152 x 23 - Web 1:

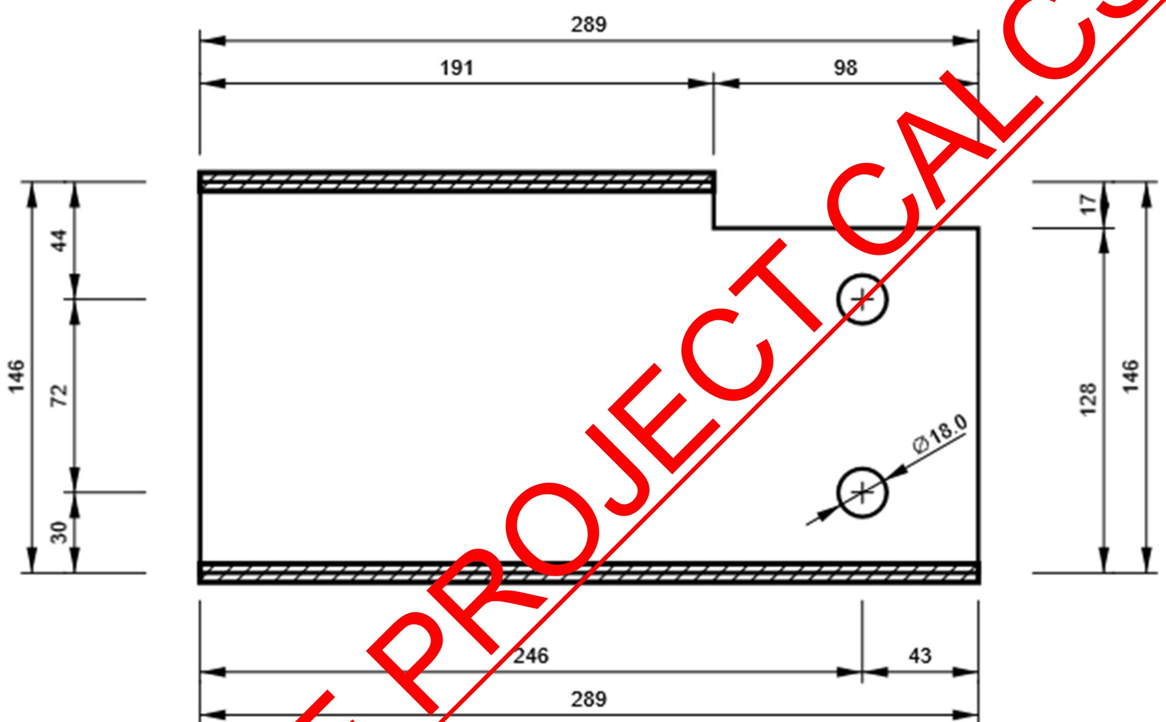

M2, UC 203 x 203 x 46 - Web 1:

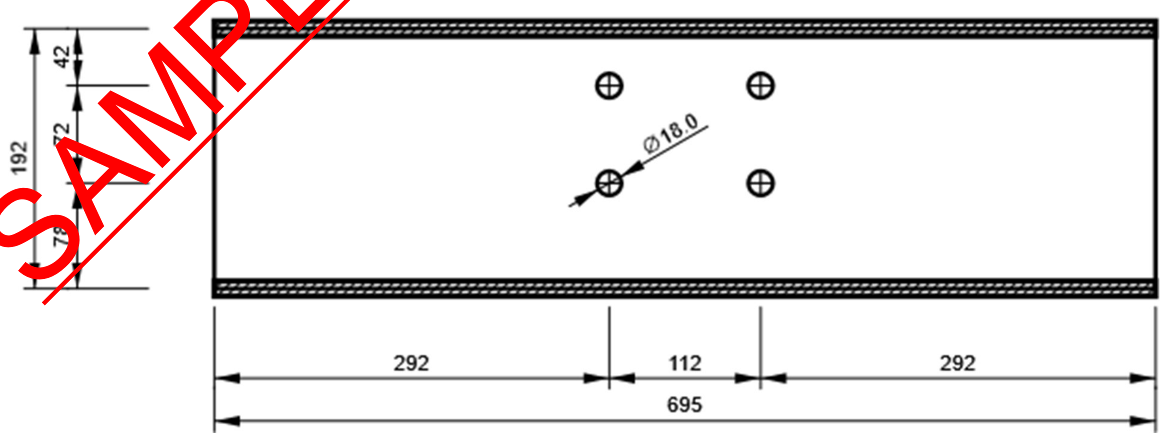

M3, UC 152 x 152 x 23 - Web 1:

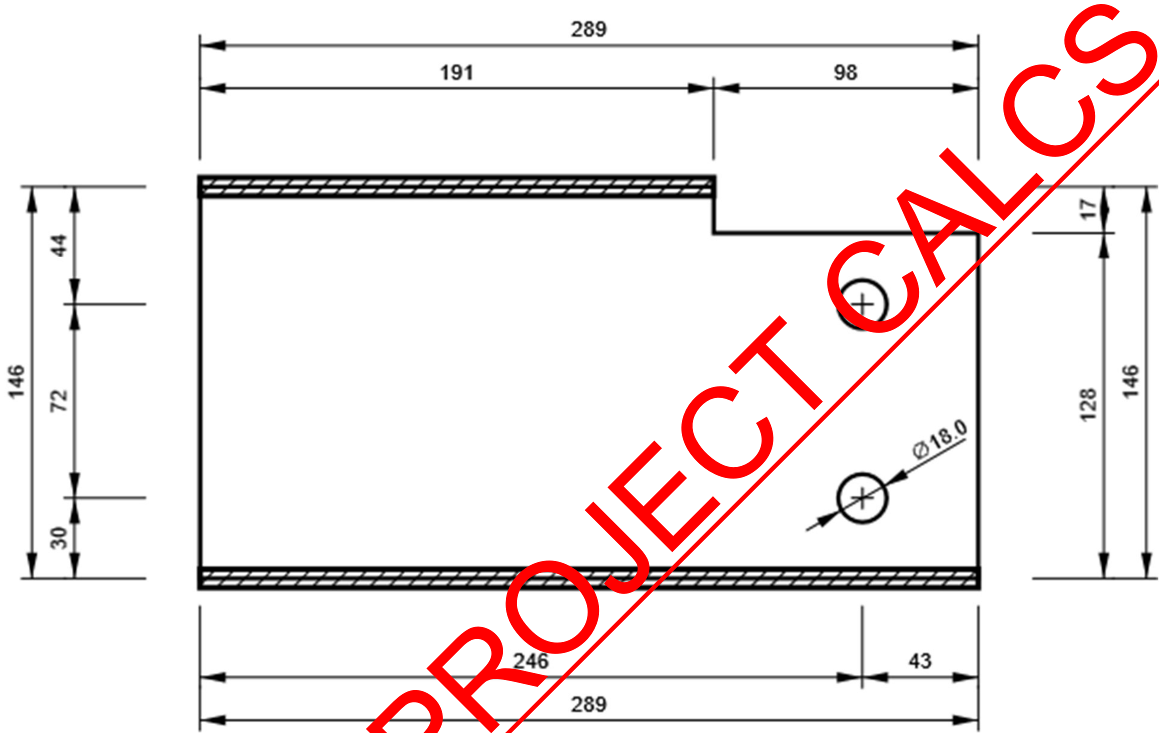

PEPP PEARL ENGINEERS, PLANNERS & PROJECT MANAGERS	**Project:** 68 GROVE PARK RD UK		**Sheet No./Rev.** 498
02 TOWERFIELDS WESTERHAM ROAD BROMLEY, BR2 6HF Email: info@Pearlepp.co.uk Website: www. pearlepp.co.uk Tel no. 02035763199	**Job Ref. 2024-06-**	**Structural Engineer** **MM**	**Date** **11/06/2024**

CLEAT1 a, L90X9 - Bottom flange 1:

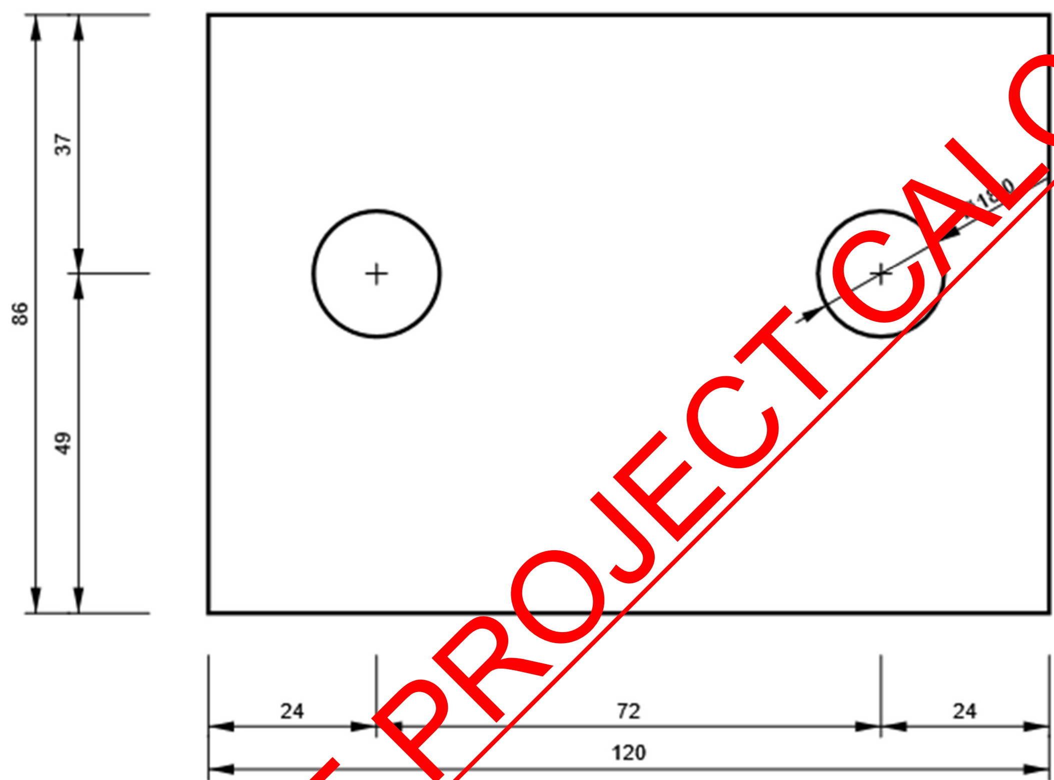

PEPP PEARL ENGINEERS, PLANNERS & PROJECT MANAGERS 02 TOWERFIELDS WESTERHAM ROAD BROMLEY, BR2 6HF Email: info@Pearlepp.co.uk Website: www. pearlepp.co.uk Tel no. 02035763199	**Project:** 68 GROVE PARK RD UK		**Sheet No./Rev.** 499
	Job Ref. 2024-06-	**Structural Engineer** **MM**	**Date** **11/06/2024**

CLEAT1 a, L90X9 - Web 1:

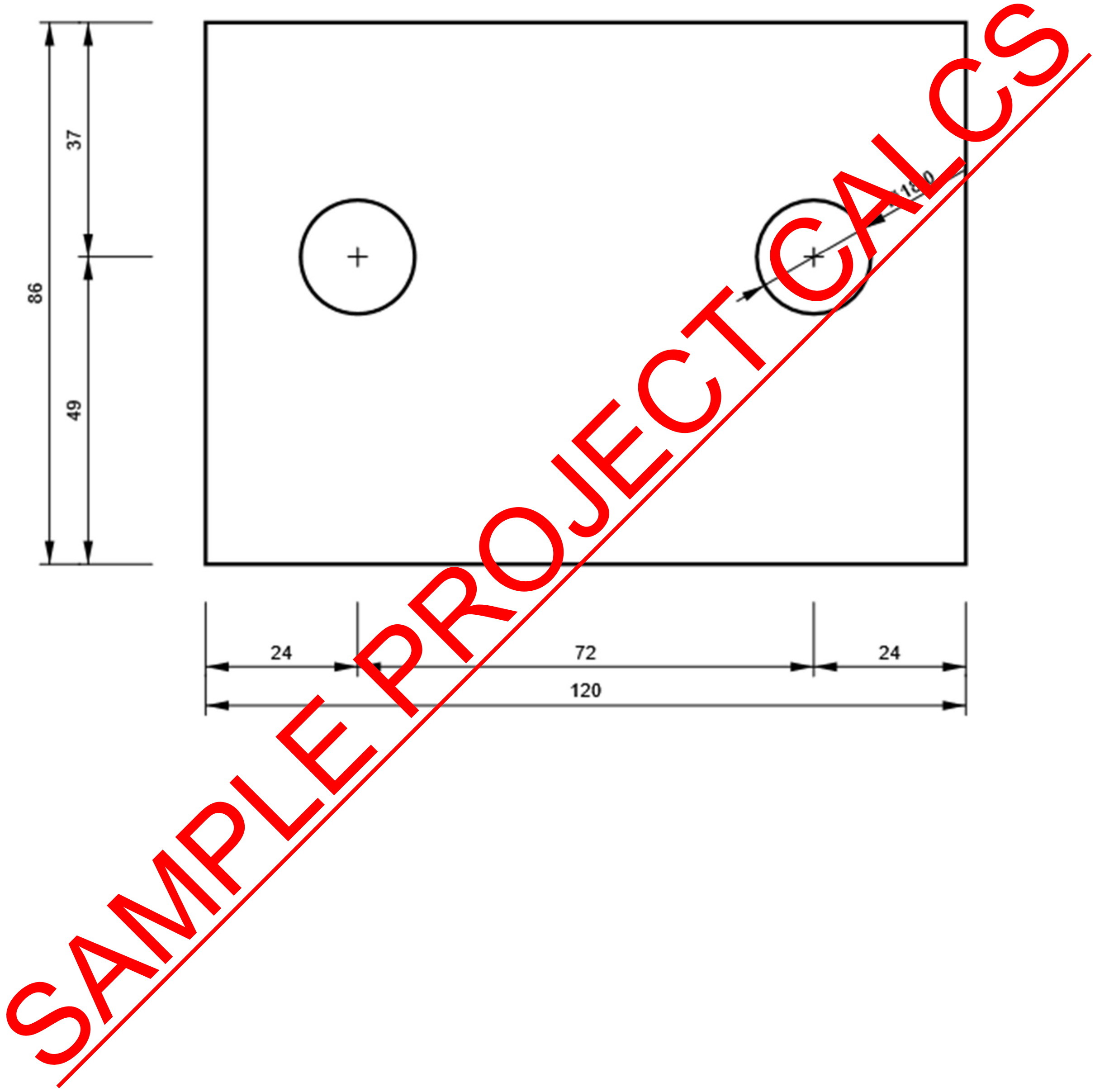

CLEAT1 b, L90X9 - Bottom flange 1:

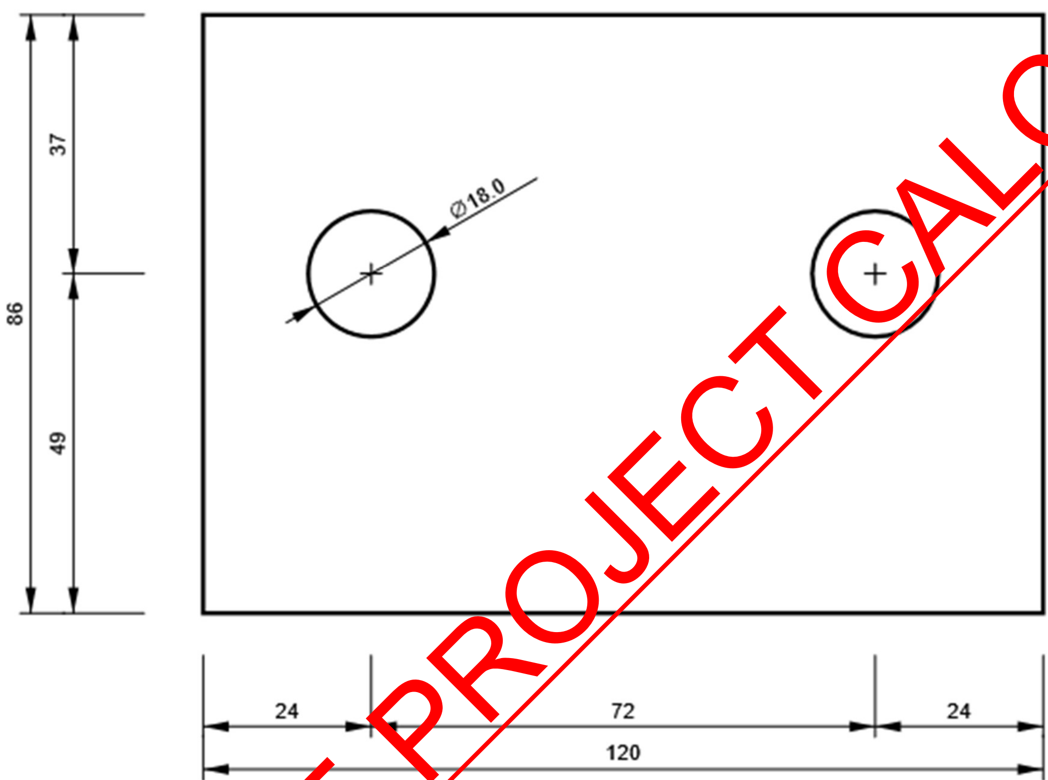

02 TOWERFIELDS WESTERHAM ROAD BROMLEY, BR2 6HF Email: info@Pearlepp.co.uk Website: www. pearlepp.co.uk Tel no. 02035763199	**Project:** 68 GROVE PARK RD UK		**Sheet No./Rev.** 501
	Job Ref. 2024-06-	**Structural Engineer** **MM**	**Date** **11/06/2024**

CLEAT1 b, L90X9 - Web 1:

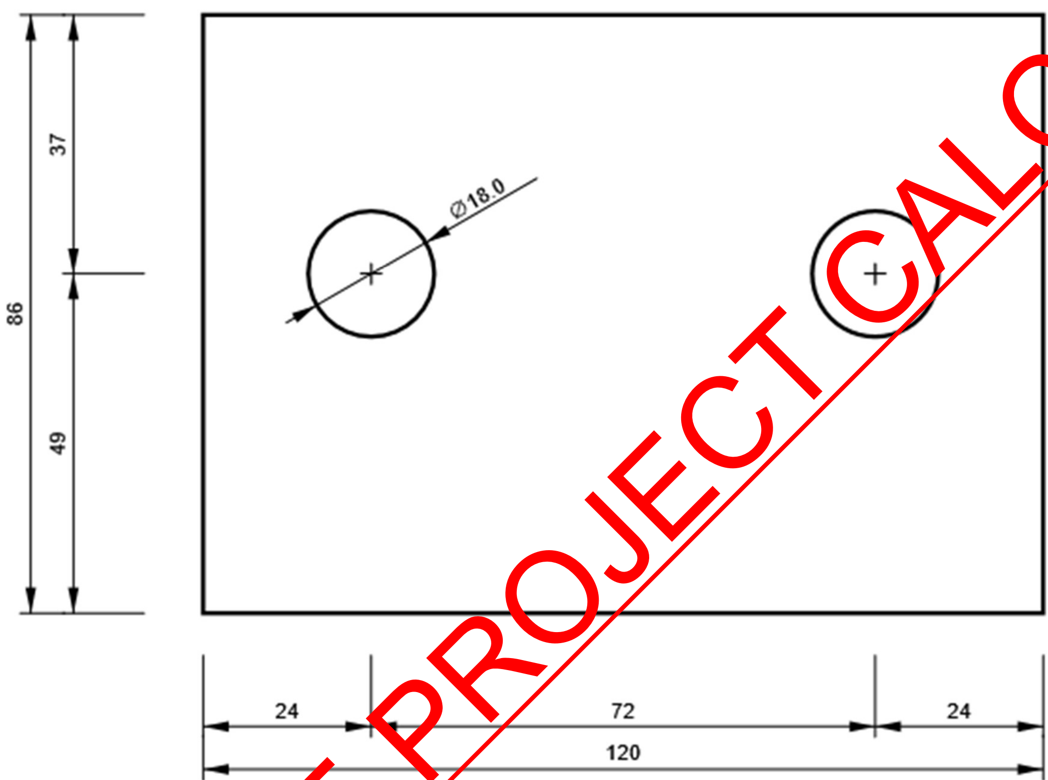

CLEAT1 c, L90X9 - Bottom flange 1:

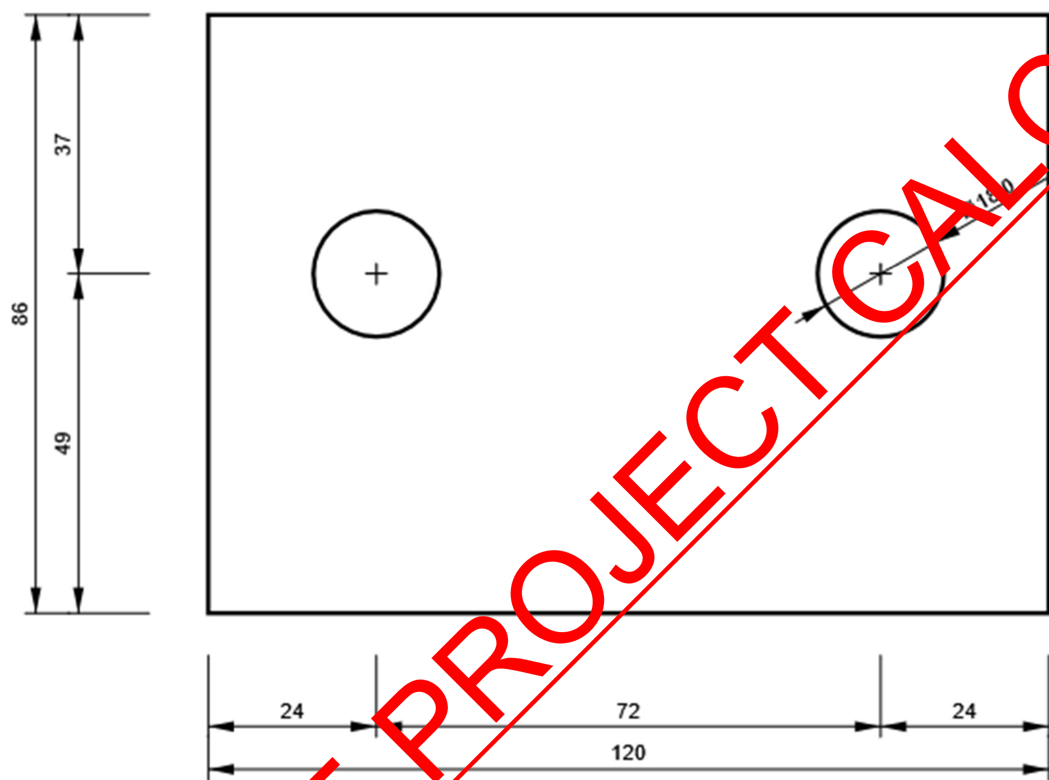

CLEAT1 c, L90X9 - Web 1:

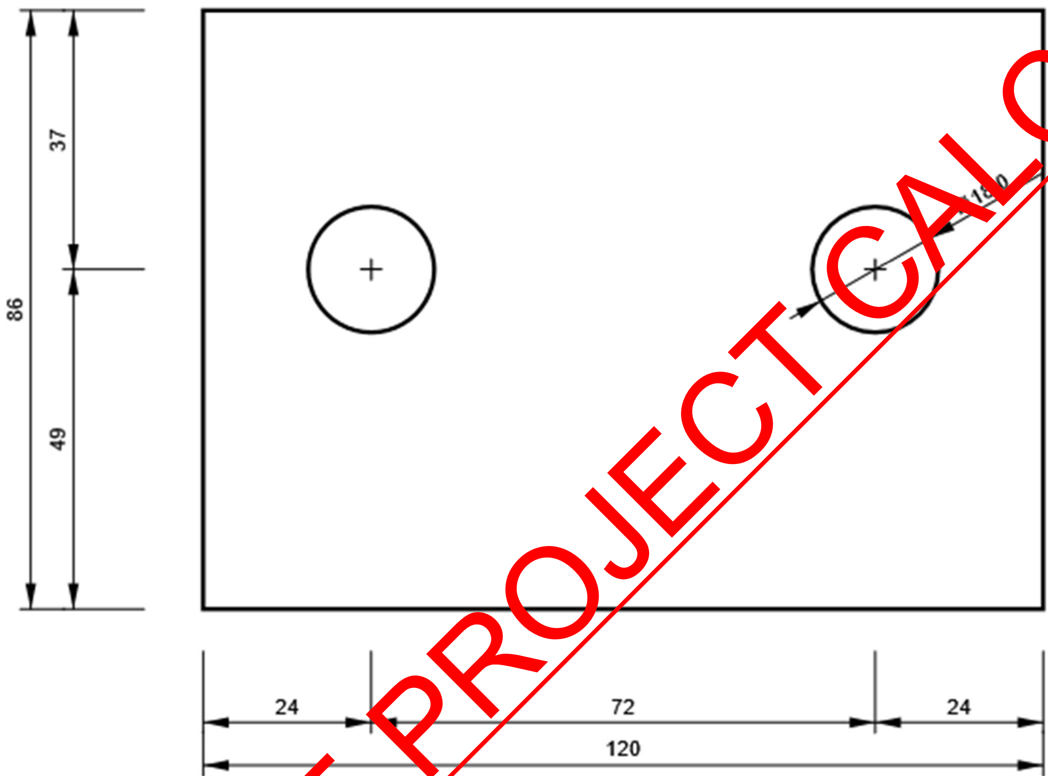

CLEAT1 d, L90X9 - Bottom flange 1:

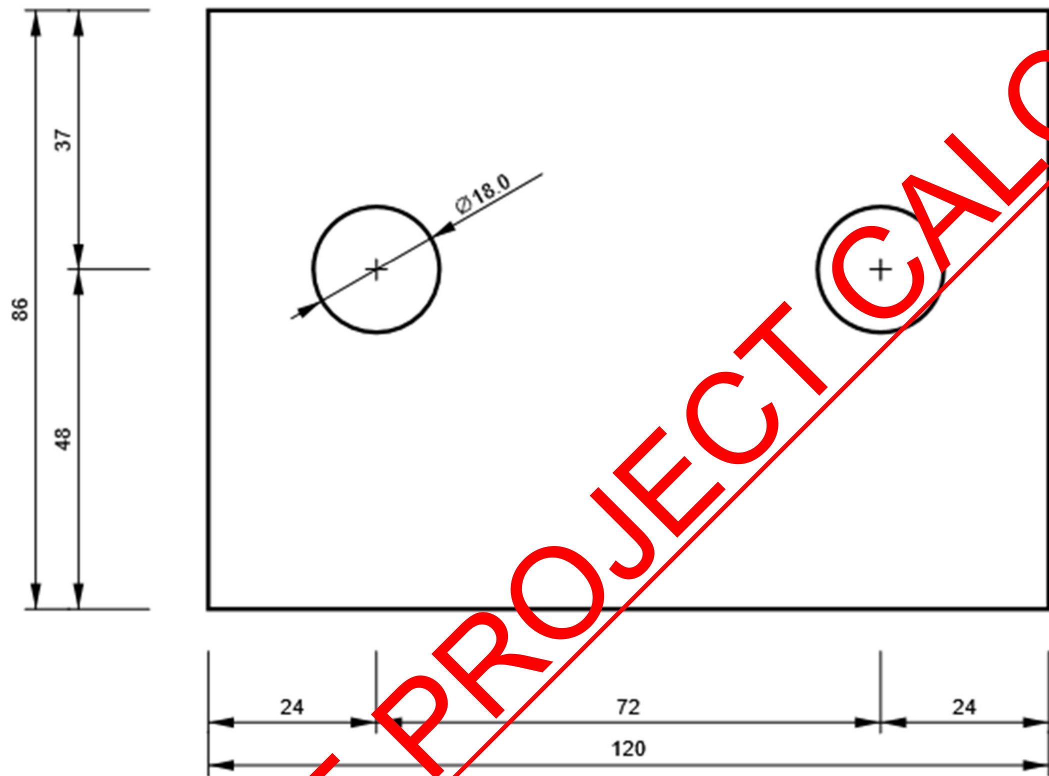

CLEAT1 d, L90X9 - Web 1:

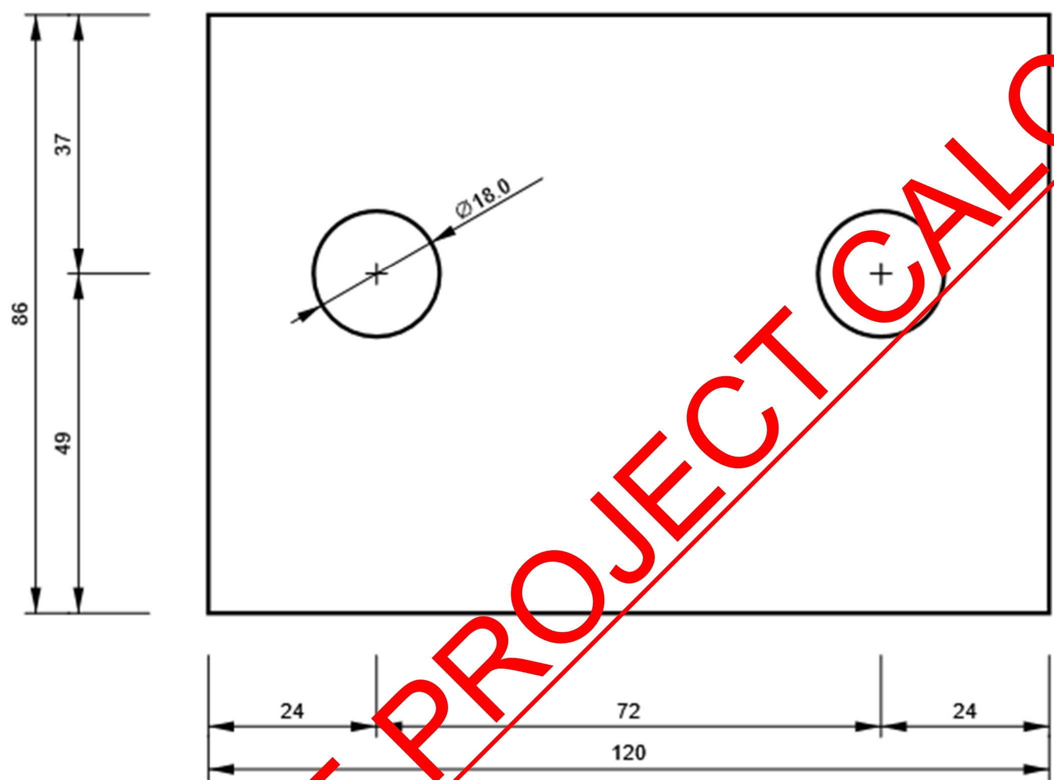

- **BP-1**

Project data

Project name
Project number
Author
Description
Date
Design code EN

Material

Steel S 275
Concrete C25/30

Project item BP-1

Design

Name BP-1

Description
Analysis Stress, strain/ simplified loading

Beams and columns

Name	Cross-section	β – Direction [°]	γ - Pitch [°]	α - Rotation [°]	Offset ex [mm]	Offset ey [mm]	Offset ez [mm]	Forces in
COL	2 - SHS100/100/10.0	0.0	-90.0	0.0	0	0	0	Node

02 TOWERFIELDS WESTERHAM ROAD BROMLEY, BR2 6HF Email: info@Pearlepp.co.uk Website: www. pearlepp.co.uk Tel no. 02035763199	**Project:** 68 GROVE PARK RD UK		**Sheet No./Rev.** 507
	Job Ref. 2024-06-	**Structural Engineer** **MM**	**Date** **11/06/2024**

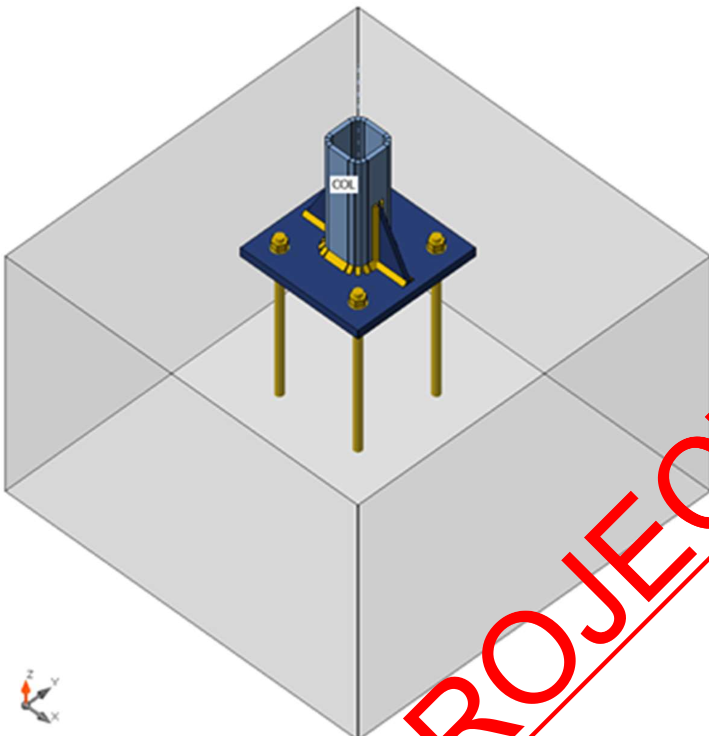

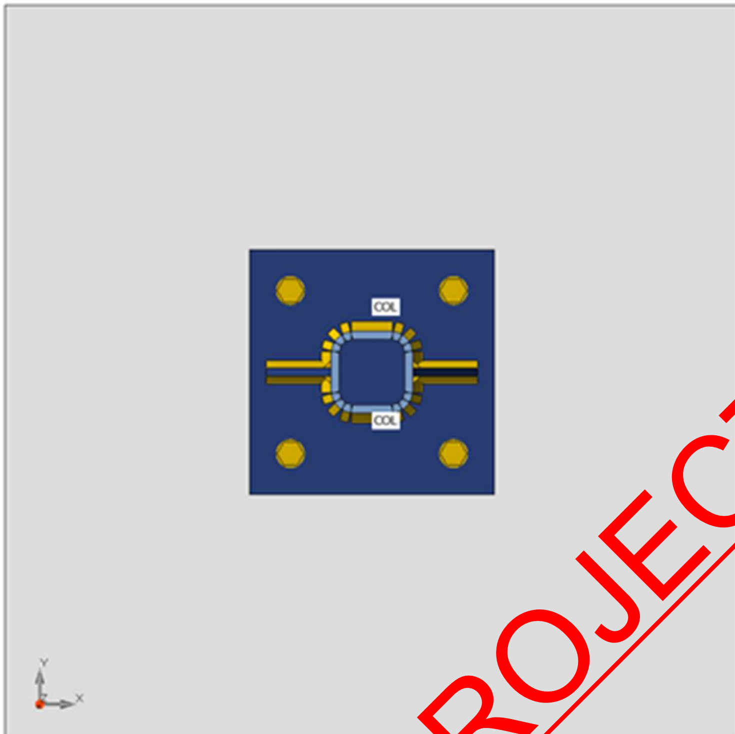
COL
COL

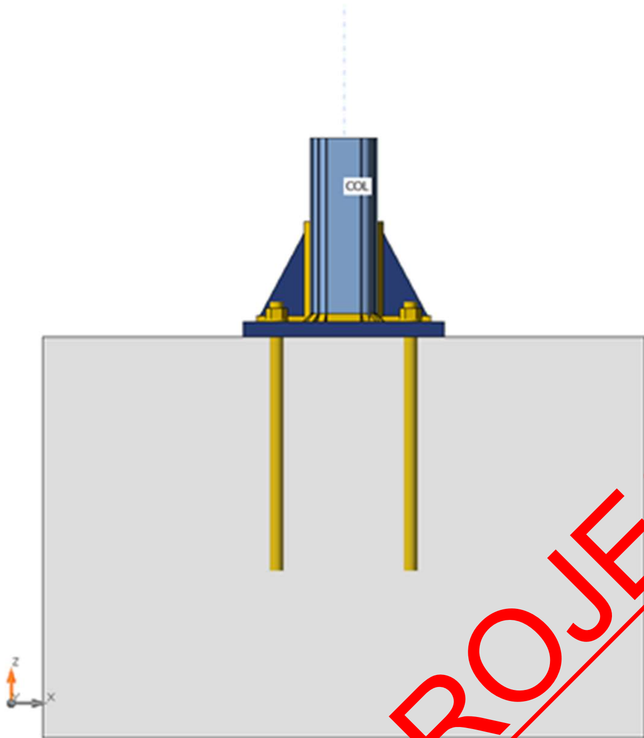

COL
z
x

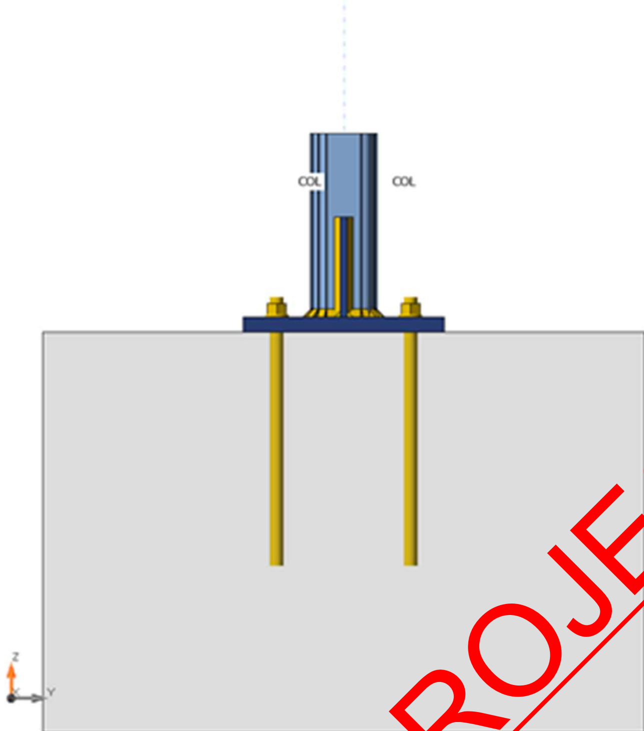

Cross-sections

Name	Material
2 - SHS100/100/10.0	S 275

Cross-sections

Name	Material	Drawing
2 - SHS100/100/10.0	S 275	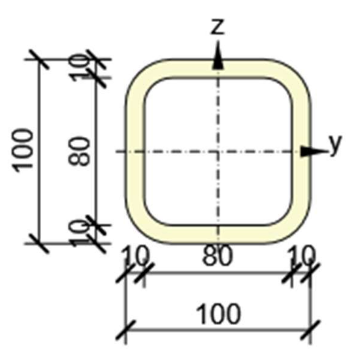

Anchors

Name	Bolt assembly	Diameter [mm]	fu [MPa]	Gross area [mm^2]
M20 8.8	M20 8.8	20	800.0	314

Load effects (equilibrium not required)

Name	Member	N [kN]	Vy [kN]	Vz [kN]	Mx [kNm]	My [kNm]	Mz [kNm]
LE1	COL	-145.0	2.0	1.0	2.0	2.0	0.0

Foundation block

Item	Value	Unit
CB 1		
Dimensions	900 x 900	mm
Depth	600	mm
Anchor	M20 8.8	
Anchoring length	350	mm
Shear force transfer	Friction	

Check

Summary

Name	Value	Status
Analysis	100.0%	OK
Plates	0.0 < 5.0%	OK
Anchors	0.6 < 100%	OK
Welds	21.7 < 100%	OK
Concrete block	10.8 < 100%	OK
Shear	6.1 < 100%	OK
Buckling	178.34	

Plates

Name	Thickness [mm]	Loads	σ_{Ed} [MPa]	ε_{Pl} [%]	σc_{Ed} [MPa]	Status
COL	10.0	LE1	114.8	0.0	0.0	OK
BP1	22.0	LE1	40.0	0.0	0.0	OK
RIB1	10.0	LE1	107.6	0.0	0.0	OK
RIB2	10.0	LE1	37.9	0.0	0.0	OK

Design data

Material	f_y [MPa]	ε_{lim} [%]
S 275	275.0	5.0

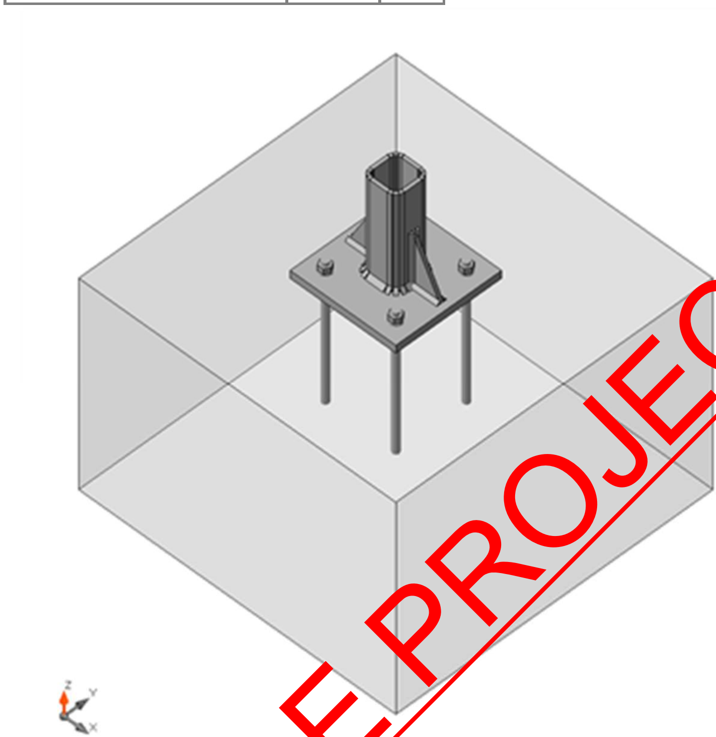

Overall check, LE1

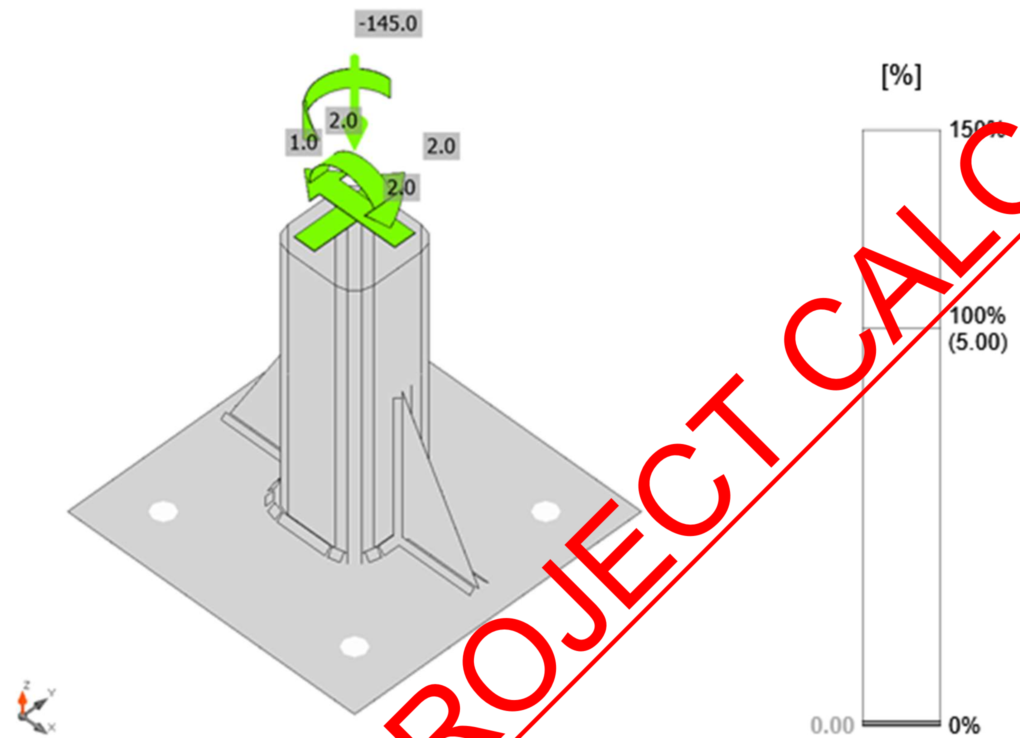

Strain check, LE1

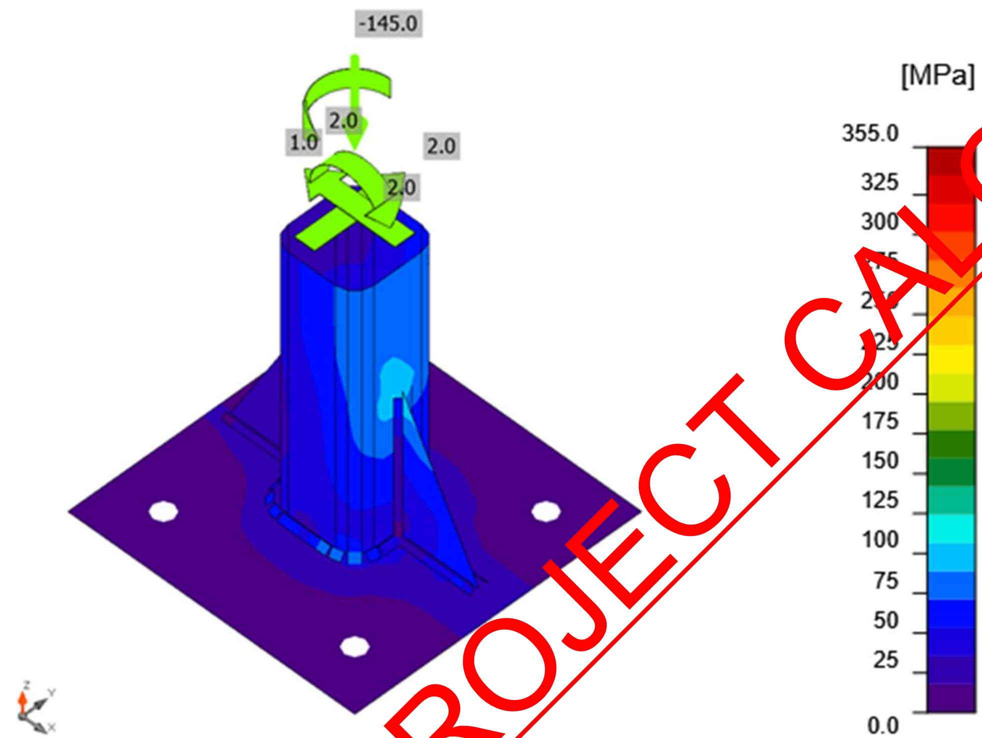

Equivalent stress, LE1

Anchors

Shape	Item	Loads	N_{Ed} [kN]	V_{Ed} [kN]	$N_{Rd,c}$ [kN]	$V_{Rd,cp}$ [kN]	Ut_t [%]	Ut_s [%]	Ut_{ts} [%]	Status
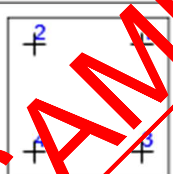	A1	LE1	0.3	0.0	96.5	302.4	0.6	0.0	0.0	OK
	A2	LE1	0.3	0.0	96.5	302.4	0.6	0.0	0.0	OK
	A3	LE1	0.0	0.0	-	302.4	0.0	0.0	0.0	OK
	A4	LE1	0.0	0.0	-	302.4	0.0	0.0	0.0	OK

Design data

Grade	$N_{Rd,s}$ [kN]	$V_{Rd,s}$ [kN]
M20 8.8 - 1	111.1	78.4

Detailed result for A1

Anchor tensile resistance (EN1992-4 - Cl. 7.2.1.3)

$N_{Rd,s} = \frac{N_{Rk,s}}{\gamma_{Ms}} =$ 111.1 kN $\geq$ $N_{Ed} =$ 0.3 kN

$N_{Rk,s} = c \cdot A_s \cdot f_{uk} =$ 166.6 kN

Where:

$c = 0.85$ – reduction factor for cut thread

$A_s = 245\ mm^2$ – tensile stress area

$f_{uk} = 800.0$ MPa – minimum tensile strength of the bolt

$\gamma_{Ms} = 1.50$ – safety factor for steel

$\gamma_{Ms} = 1.2 \cdot \frac{f_{uk}}{f_{yk}} \geq 1.4$

, where:

$f_{yk} =$

640.0 MPa – minimum yield strength of the bolt

Concrete breakout resistance of anchor in tension (EN1992-4 - Cl. 7.2.1.4)
The check is performed for group of anchors that form common tension breakout cone: A1, A2

$N_{Rd,c} = \frac{N_{Rk,c}}{\gamma_{Mc}} =$ 96.5 kN $\geq$ $N_{Ed,g} =$ 0.6 kN

$N_{Rk,c} = N^0_{Rk,c} \cdot \frac{A_{c,N}}{A^0_{c,N}} \cdot \psi_{s,N} \cdot \psi_{re,N} \cdot \psi_{ec,N} \cdot \psi_{M,N} =$ 173.7 kN

Where:

$N_{Ed,g} = 0.6$ kN – sum of tension forces of anchors with common concrete breakout cone area

$N^0_{Rk,c} = 137.2$ kN – characteristic strength of a fastener, remote from the effects of adjacent fasteners or edges of the concrete member

$N^0_{Rk,c} = k_1 \cdot \sqrt{f_c} \cdot h_{ef}^{1.5}$

, where:

$k_1 =$

7.70 – parameter accounting for anchor type and concrete condition

$f_c =$

25.0 MPa – concrete compressive strength

$h_{ef} = \min(h_{emb}, \max(\frac{c_{a,max}}{1.5}, \frac{s_{max}}{3})) =$

233 mm – depth of embedment, where:

$h_{emb} =$

350 mm – anchor length embedded in concrete

$c_{a,max} =$

350 mm – maximum distance from the anchor to one of the three closest edges

$s_{max} =$

200 mm – maximum spacing between anchors

$A_{c,N}$ = 630000 mm^2 – concrete breakout cone area for group of anchors

$A^0_{c,N}$ = 490000 mm^2 – concrete breakout cone area for single anchor not influenced by edges

$A^0_{c,N} = (3 \cdot h_{ef})^2$

, where:
h_{ef} =
233 mm – depth of embedment

$\psi_{s,N}$ = 1.00 – parameter related to the distribution of stresses in the concrete due to the proximity of the fastener to an edge of the concrete member:

$\psi_{s,N} = 0.7 + 0.3 \cdot \frac{c}{1.5 \cdot h_{ef}} \leq 1$

, where:
c =
350 mm – minimum distance from the anchor to the edge
h_{ef} =
233 mm – depth of embedment

$\psi_{re,N}$ = 1.00 – parameter accounting for the shell spalling:

$\psi_{re,N} = 0.5 + \frac{h_{emb}}{200} \leq 1$

, where:
h_{emb} =
350 mm – anchor length embedded in concrete

$\psi_{ec,N}$ = 0.98 – modification factor for anchor groups loaded eccentrically in tension:

$\psi_{ec,N} = \psi_{ecx,N} \cdot \psi_{ecy,N}$

, where:
$\psi_{ecx,N} = \frac{1}{1+\frac{2 \cdot e_{x,N}}{3 \cdot h_{ef}}}$ =
1.00 – modification factor that depends on eccentricity in x-direction
$e_{x,N}$ =
0 mm – tension load eccentricity in x-direction
$\psi_{ecy,N} = \frac{1}{1+\frac{2 \cdot e_{y,N}}{3 \cdot h_{ef}}}$ =
0.98 – modification factor that depends on eccentricity in y-direction
$e_{y,N}$ =
5 mm – tension load eccentricity in y-direction
h_{ef} =
233 mm – depth of embedment

$\psi_{M,N}$ = 1.00 – parameter accounting for the effect of a compression force between the fixture and concrete; this parameter is equal to 1 if c < 1.5h_{ef} or the ratio of the compressive force (including the compression due to bending) to the sum of tensile forces in anchors is smaller than 0.8

$\psi_{M,N} = 2 - \frac{2 \cdot z}{3 \cdot h_{ef}} \geq 1$

, where:
z =
115 mm – internal lever arm
h_{ef} =
233 mm – depth of embedment

$\gamma_{Mc} = 1.80$ – safety factor for concrete

Shear resistance (EN1992-4 - Cl.7.2.2.3.1)

$V_{Rd,s} = \frac{V_{Rk,s}}{\gamma_{Ms}} =$ 78.4 kN ≥ $V_{Ed} =$ 0.0 kN

$V_{Rk,s} = k_7 \cdot V^0_{Rk,s} =$ 98.0 kN

Where:

$k_7 = 1.00$ – coefficient for anchor steel ductility

$$k_7 = \begin{cases} 0.8, & A < 0.08 \\ 1.0, & A \geq 0.08 \end{cases}$$

, where:

$A =$

0.12 – bolt grade elongation at rupture

$V^0_{Rk,s} = 98.0$ kN – the characteristic shear strength

$V^0_{Rk,s} = k_6 \cdot A_s \cdot f_{uk}$

, where:

$k_6 =$

0.50 – coefficient for anchor resistance in shear

$A_s =$

245 mm^2 – tensile stress area

$f_{uk} =$

800.0 MPa – specified ultimate strength of anchor steel

$\gamma_{Ms} = 1.25$ – safety factor for steel

Concrete pryout resistance (EN1992-4 - Cl. 7.2.2.4)

The check is performed for group of anchors on common base plate

$V_{Rd,cp} = \frac{V_{Rk,cp}}{\gamma_{Mc}} =$ 302.4 kN ≥ $V_{Ed,g} =$ 0.0 kN

$V_{Rk,cp} = k_8 \cdot N_{Rk,c} =$ 453.7 kN

Where:

$k_8 = 2.00$ – factor taking into account fastener embedment depth

$N_{Rk,c} = 226.8$ kN – characteristic concrete cone strength for a single fastener or fastener in a group

$\gamma_{Mc} = 1.50$ – safety factor for concrete

Interaction of tensile and shear forces in steel (EN 1992-4 - Table 7.3)

$\left(\frac{N_{Ed}}{N_{Rd,s}}\right)^2 + \left(\frac{V_{Ed}}{V_{Rd,s}}\right)^2 =$ 0.00 ≤ 1.0

Where:

N_{Ed} = 0.3 kN – design tension force

$N_{Rd,s}$ = 111.1 kN – fastener tensile strength

V_{Ed} = 0.0 kN – design shear force

$V_{Rd,s}$ = 78.4 kN – fastener shear strength

Interaction of tensile and shear forces in concrete (EN 1992-4 - Table 7.3)

$$(\frac{N_{Ed}}{N_{Rd,i}})^{1.5} + (\frac{V_{Ed}}{V_{Rd,i}})^{1.5} = \quad 0.00 \leq 1.0$$

Where:

$\frac{N_{Ed}}{N_{Rd,i}}$ – the largest utilization value for tension failure modes

$\frac{V_{Ed}}{V_{Rd,i}}$ – the largest utilization value for shear failure modes

$\frac{N_{Ed}}{N_{Rd,c}}$ = 0% – concrete breakout failure of anchor in tension

$\frac{N_{Ed}}{N_{Rd,p}}$ = 0% – concrete pullout failure

$\frac{N_{Ed}}{N_{Rd,cb}}$ = 0% – concrete blowout failure

$\frac{V_{Ed}}{V_{Rd,c}}$ = 0% – concrete edge failure

$\frac{V_{Ed}}{V_{Rd,cp}}$ = 0% – concrete pryout failure

Welds (Plastic redistribution)

Item	Edge	Throat th. [mm]	Length [mm]	Loads	$\sigma_{w,Ed}$ [MPa]	ε_{Pl} [%]	$\sigma_\perp$ [MPa]	$\tau_{\|\|}$ [MPa]	$\tau_\perp$ [MPa]	Ut [%]	Ut_c [%]	Status
BP1	COL	◢8.5	324	LE1	94.5	0.0	-65.1	23.8	31.6	21.7	13.4	OK
BP1	RIB1	◢6.5 ◣	80	LE1	62.5	0.0	-25.1	21.1	-25.4	14.4	9.4	OK
		◢6.5 ◣	80	LE1	66.6	0.0	-27.7	-21.6	27.4	15.3	10.5	OK
COL-w 1	RIB1	◢6.5 ◣	150	LE1	63.3	0.0	-6.4	-36.1	-4.4	14.5	7.0	OK
		◢6.5 ◣	150	LE1	60.3	0.0	-4.9	34.0	6.8	13.8	5.1	OK
BP1	RIB2	◢6.5 ◣	80	LE1	23.7	0.0	-9.8	7.2	-10.1	5.4	4.2	OK
		◢6.5 ◣	80	LE1	27.5	0.0	-12.2	-7.7	12.0	6.3	5.3	OK

COL -w 3	RIB2	◢6.5 ◣	150	LE1	21.9	0.0	-2.8	-12.5	-0.8	5.0	3.8	OK
		◢6.5 ◣	150	LE1	19.0	0.0	-1.2	10.5	3.2	4.4	1.9	OK

Design data

	β_w [-]	$\sigma_{w,Rd}$ [MPa]	0.9 σ [MPa]
S 355	0.90	435.6	352.8

Detailed result for BP1 COL

Weld resistance check (EN 1993-1-8 4.5.3.2)

$\sigma_{w,Rd} = f_u/(\beta_w \gamma_{M2}) =$ 435.6 MPa $\geq$ $\sigma_{w,Ed} = [\sigma_\perp^2 + 3(\tau_\perp^2 + \tau_\parallel^2)]^{0.5} =$ 94.5 MPa

$\sigma_{\perp,Rd} = 0.9 f_u/\gamma_{M2} =$ 352.8 MPa $\geq$ $|\sigma_\perp| =$ 65.1 MPa

where:

$f_u =$ 490.0 MPa – Ultimate strength

$\beta_w =$ 0.90 – appropriate correlation factor taken from Table 4.1

$\gamma_{M2} =$ 1.25 – Safety factor

Stress utilization

$U_t = \max(\frac{\sigma_{w,Ed}}{\sigma_{w,Rd}}; \frac{|\sigma_\perp|}{\sigma_{\perp,Rd}}) =$ 21.7 %

Concrete block

Item	Loads	c [mm]	A_{eff} [mm^2]	σ [MPa]	k_j [-]	F_{jd} [MPa]	Ut [%]	Status
CB 1	LE1	41	40281	3.6	3.00	33.5	10.8	OK

Detailed result for CB 1

Concrete block compressive resistance check (EN 1993-1-8 6.2.5)

$\sigma = \frac{N}{A_{eff}} =$ 3.6 MPa

$F_{jd} = \alpha_{cc} \beta_j k_j f_{ck}/\gamma_c =$ 33.5 MPa

where:

$N =$ 146.1 kN – Design normal force

$A_{eff} =$ 40281 mm^2 – Effective area, on which the column force N is distributed

PEARL ENGINEERS, PLANNERS & PROJECT MANAGERS
02 TOWERFIELDS WESTERHAM ROAD
BROMLEY, BR2 6HF
Email: info@Pearlepp.co.uk
Website: www. pearlepp.co.uk
Tel no. 02035763199

$\alpha_{cc} = 1.00$ – Long-term effects on Fcd

$\beta_j = 0.67$ – Joint coefficient βj

$k_j = 3.00$ – Concentration factor

$f_{ck} = 25.0$ MPa – Characteristic compressive concrete strength

$\gamma_c = 1.50$ – Safety factor

Stress utilization

$U_t = \frac{\sigma}{F_{jd}} =$ 10.8 %

Shear in contact plane

Name	Loads	V_y [kN]	V_z [kN]	$V_{Rd,y}$ [kN]	$V_{Rd,z}$ [kN]	$V_{c,Rd}$ [kN]	Ut [%]	Status
BP1	LE1	2.0	1.0	36.5	36.5	0.0	6.1	OK

Detailed result for BP1

Base plate shear resistance check (EN 1993-1-8 – 6.2.2)

$V_{Rd,y} = NC_f =$ 36.5 kN

$V_{Rd,z} = NC_f =$ 36.5 kN

where:

$N = 146.1$ kN – Design normal force

$C_f = 0.25$ – Friction coefficient

Utilization in shear

$U_t = \max\left(\frac{\sqrt{Vy^2+Vz^2}}{V_{Rd,y}}, \frac{\sqrt{Vy^2+Vz^2}}{V_{Rd,z}}\right) =$ 6.1 %

Buckling

Loads	Shape	Factor [-]
LE1	1	178.34
	2	183.46
	3	189.11
	4	226.50
	5	241.17
	6	247.82

Bill of material

Manufacturing operations

Name	Plates [mm]	Shape	Nr.	Welds [mm]	Length [mm]	Bolts	Nr.
BP1	P22.0x300.0-300.0 (S 275)		1	Fillet: a = 8.5	324.2	M20 8.8	4
RIB1	P10.0x80.0-150.0 (S 275)		1	Double fillet: a = 6.5	230.0		
RIB2	P10.0x80.0-150.0 (S 275)		1	Double fillet: a = 6.5	230.0		

Welds

Type	Material	Throat thickness [mm]	Leg size [mm]	Length [mm]
Fillet	S 275	8.5	12.0	324.2
Double fillet	S 275	6.5	9.2	460.0

Anchors

Name	Length [mm]	Drill length [mm]	Count
M20 8.8	372	350	4

Drawing

BP1

P22.0x300-300 (S 275)

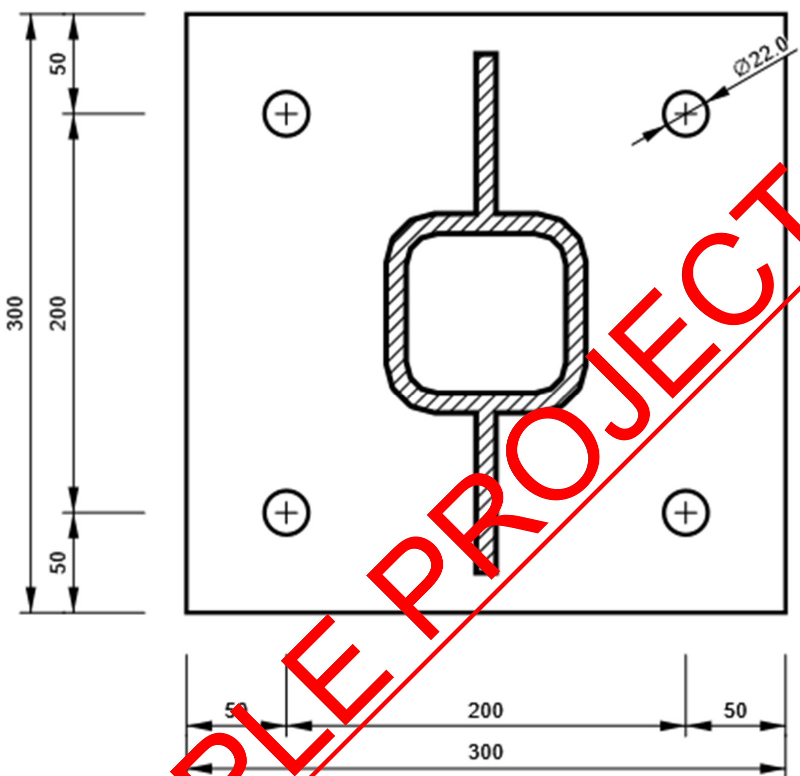

RIB1

P10.0x150-80 (S 275)

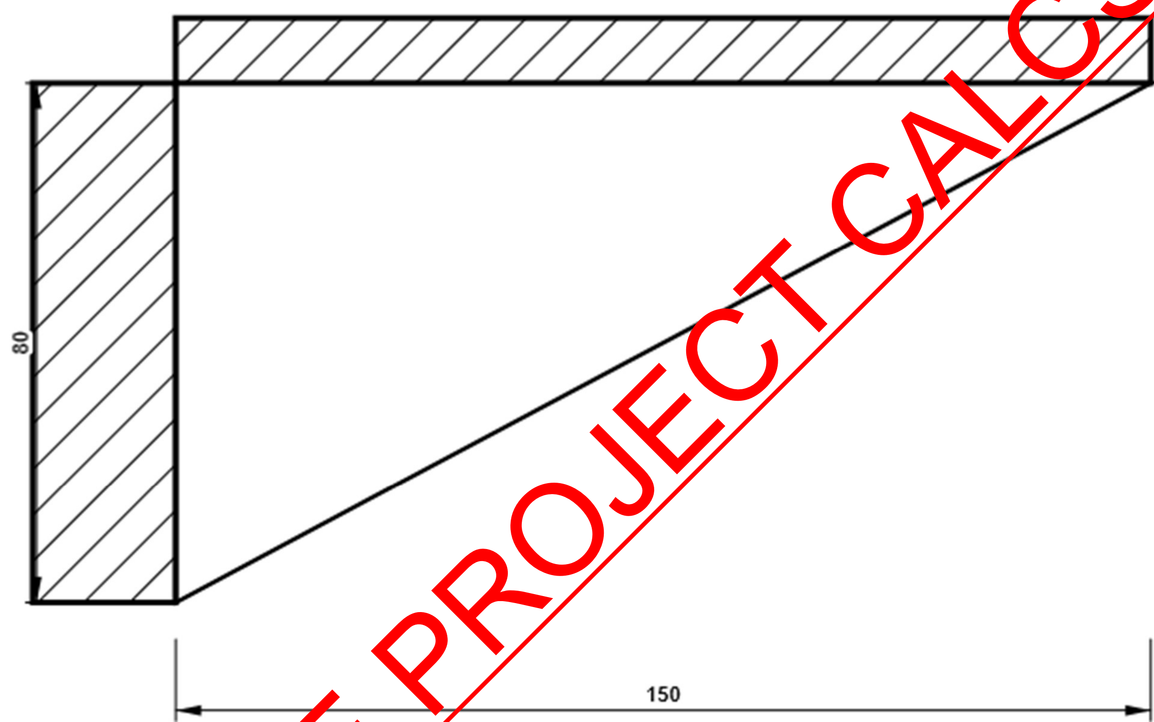

RIB2

P10.0x150-80 (S 275)

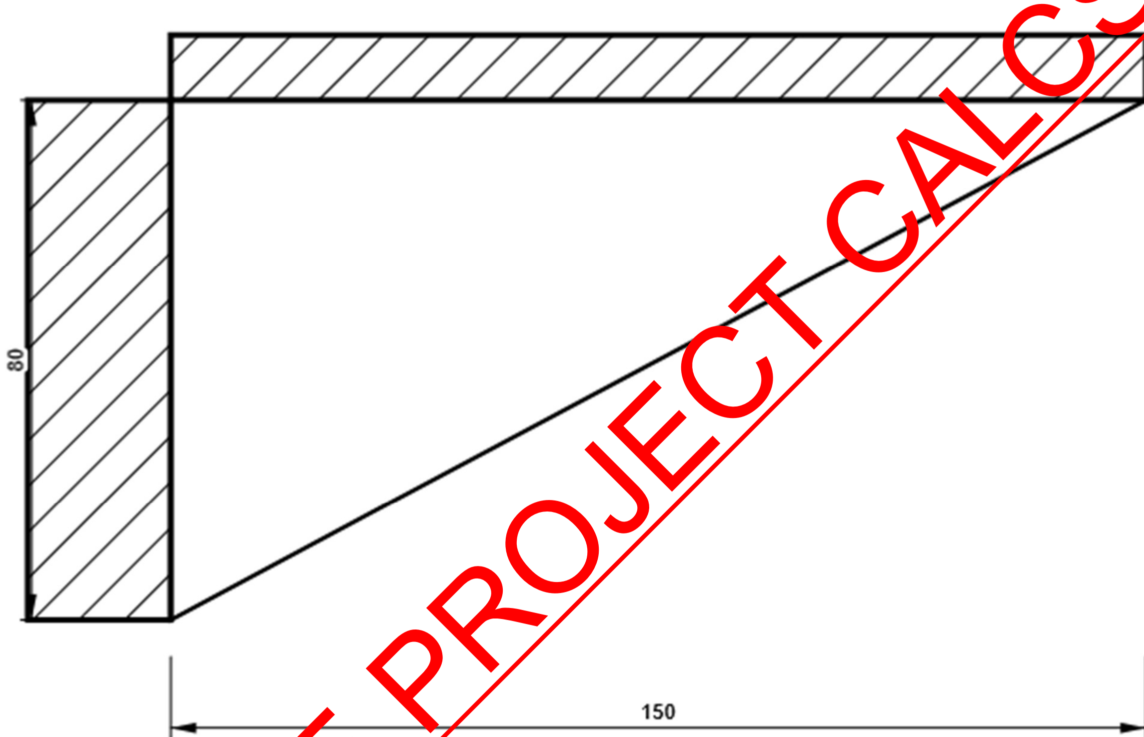

- **BP-2**

Project data

Project name	
Project number	
Author	
Description	
Date	
Design code	EN

Material

Steel	S 275
Concrete	C25/30

Project item BP-2

Design

Name	BP-2
Description	
Analysis	Stress, strain/ simplified loading

Beams and columns

Name	Cross-section	β – Direction [°]	γ - Pitch [°]	α - Rotation [°]	Offset ex [mm]	Offset ey [mm]	Offset ez [mm]	Forces in
COL	1 - CON1(UC 152 x 152 x 30)	0.0	-90.0	0.0	0	0	0	Bolts

PEPP — PEARL ENGINEERS, PLANNERS & PROJECT MANAGERS 02 TOWERFIELDS WESTERHAM ROAD BROMLEY, BR2 6HF Email: info@Pearlepp.co.uk Website: www. pearlepp.co.uk Tel no. 02035763199	**Project:** 68 GROVE PARK RD UK		**Sheet No./Rev.** 526
	Job Ref. 2024-06-	**Structural Engineer** **MM**	**Date** **11/06/2024**

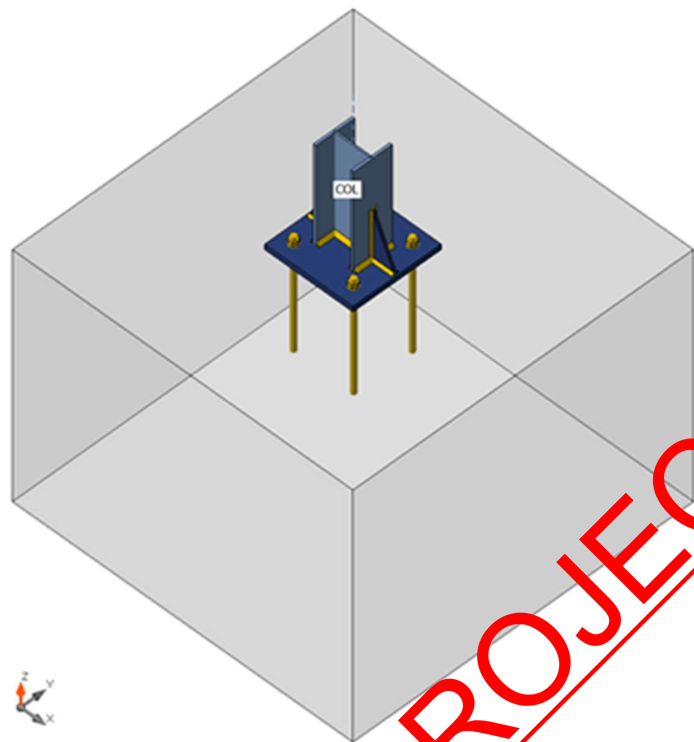

PEPP PEARL ENGINEERS, PLANNERS & PROJECT MANAGERS 02 TOWERFIELDS WESTERHAM ROAD BROMLEY, BR2 6HF Email: info@Pearlepp.co.uk Website: www. pearlepp.co.uk Tel no. 02035763199	**Project:** 68 GROVE PARK RD UK	**Sheet No./Rev.** 527
	Job Ref. 2024-06- | **Structural Engineer** **MM**	**Date** **11/06/2024**

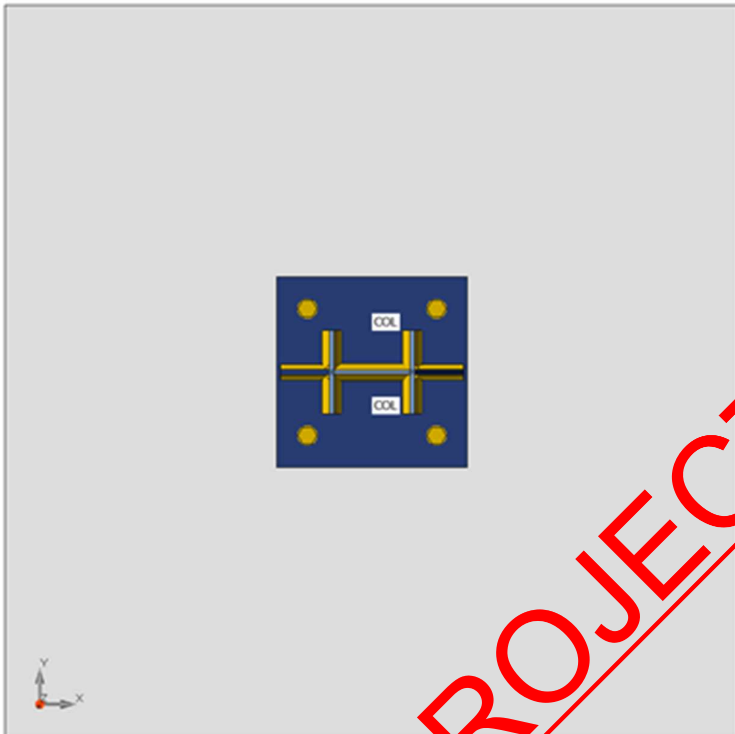

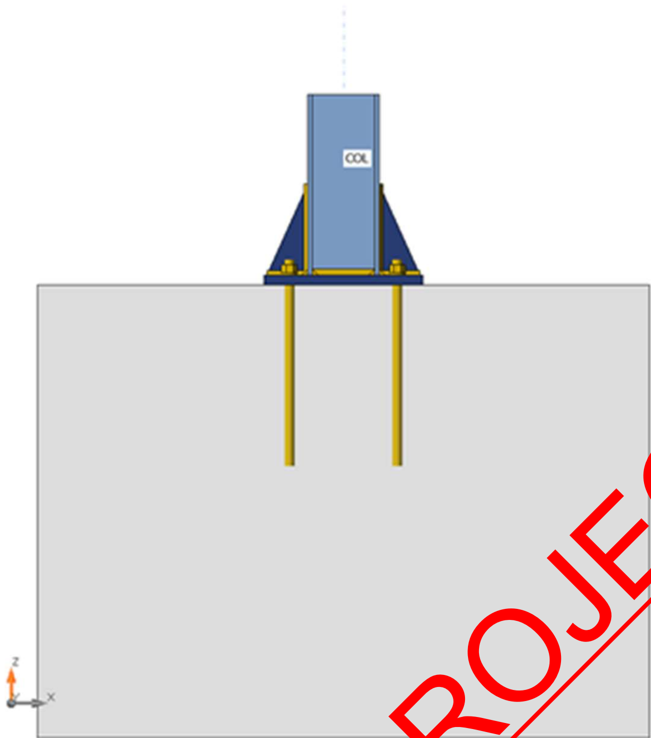

COL
z
x

02 TOWERFIELDS WESTERHAM ROAD BROMLEY, BR2 6HF Email: info@Pearlepp.co.uk Website: www. pearlepp.co.uk Tel no. 02035763199	**Project:** 68 GROVE PARK RD UK	**Sheet No./Rev.** 529
	Job Ref. 2024-06-	**Structural Engineer** **MM**
		Date **11/06/2024**

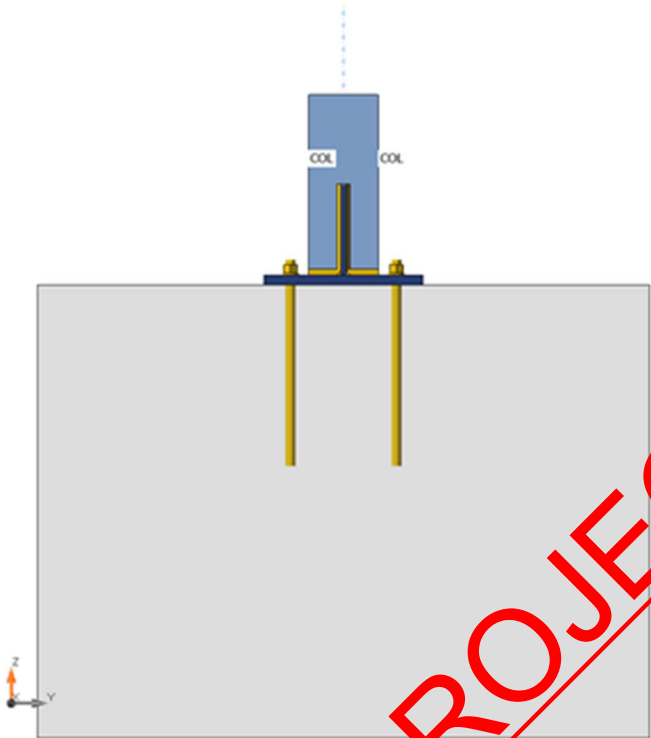

Cross-sections

Name	Material
1 - CON1(UC 152 x 152 x 30)	S 275

Cross-sections

Name	Material	Drawing
1 - CON1(UC 152 x 152 x 30)	S 275	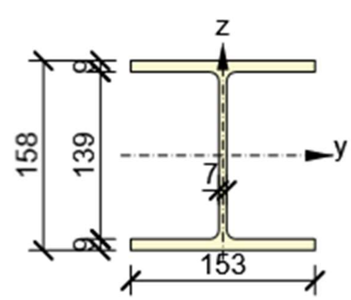

PEPP
PEARL ENGINEERS, PLANNERS & PROJECT MANAGERS

02 TOWERFIELDS WESTERHAM ROAD
BROMLEY, BR2 6HF
Email: info@Pearlepp.co.uk
Website: www. pearlepp.co.uk
Tel no. 02035763199

Anchors

Name	Bolt assembly	Diameter [mm]	fu [MPa]	Gross area [mm^2]
M22 8.8	M22 8.8	22	800.0	380

Load effects (equilibrium not required)

Name	Member	N [kN]	Vy [kN]	Vz [kN]	Mx [kNm]	My [kNm]	Mz [kNm]
LE1	COL	-107.0	0.0	-15.0	0.0	20.0	0.0

Foundation block

Item	Value	Unit
CB 1		
Dimensions	1350 x 1350	mm
Depth	1000	mm
Anchor	M22 8.8	
Anchoring length	400	mm
Shear force transfer	Anchors	

Check

Summary

Name	Value	Status
Analysis	100.0%	OK
Plates	0.0 < 5.0%	OK
Anchors	18.3 < 100%	OK
Welds	33.2 < 100%	OK
Concrete block	16.3 < 100%	OK
Buckling	24.41	

Plates

Name	Material	Thickness [mm]	Loads	σ_{Ed} [MPa]	ε_{Pl} [%]	σc_{Ed} [MPa]	Status
COL-bfl 1	S 275	9.4	LE1	121.2	0.0	0.0	OK
COL-tfl 1	S 275	9.4	LE1	93.0	0.0	0.0	OK
COL-w 1	S 275	6.5	LE1	100.6	0.0	0.0	OK
BP1	S 355	22.0	LE1	90.6	0.0	0.0	OK
RIB1	S 355	10.0	LE1	72.9	0.0	0.0	OK
RIB2	S 355	10.0	LE1	145.2	0.0	0.0	OK

Design data

Material	f_y [MPa]	ε_{lim} [%]
S 275	275.0	5.0
S 355	355.0	5.0

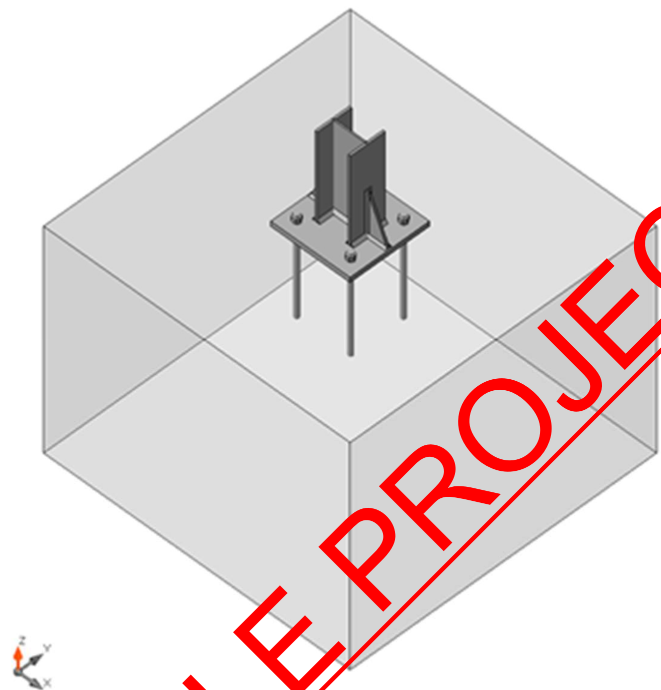

Overall check, LE1

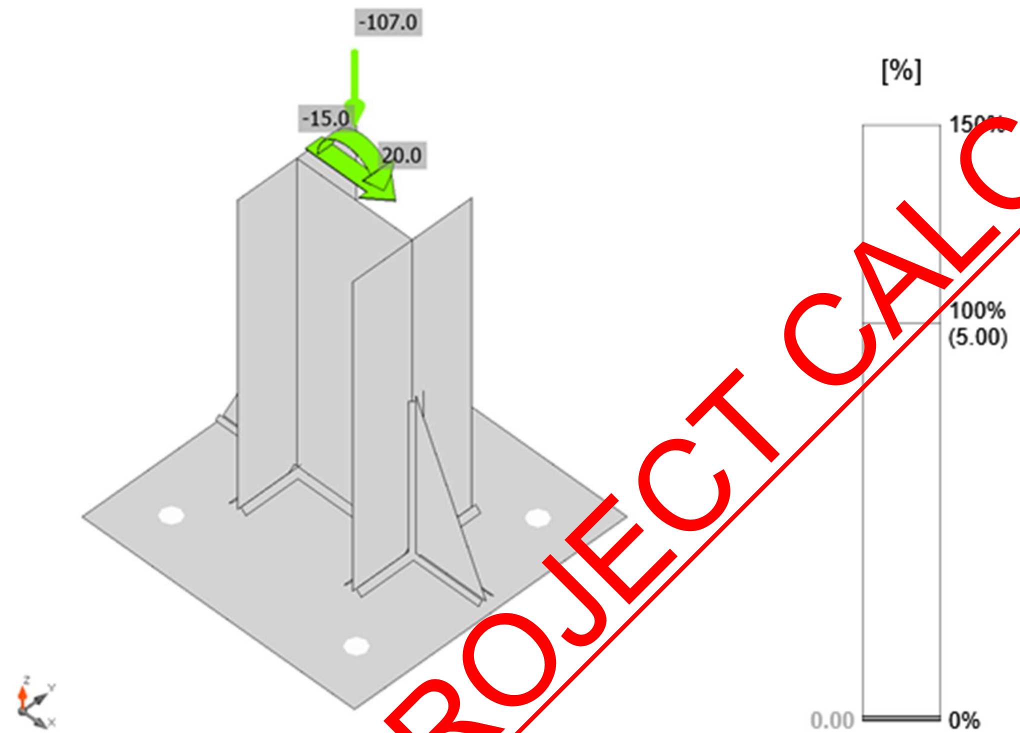

Strain check, LE1

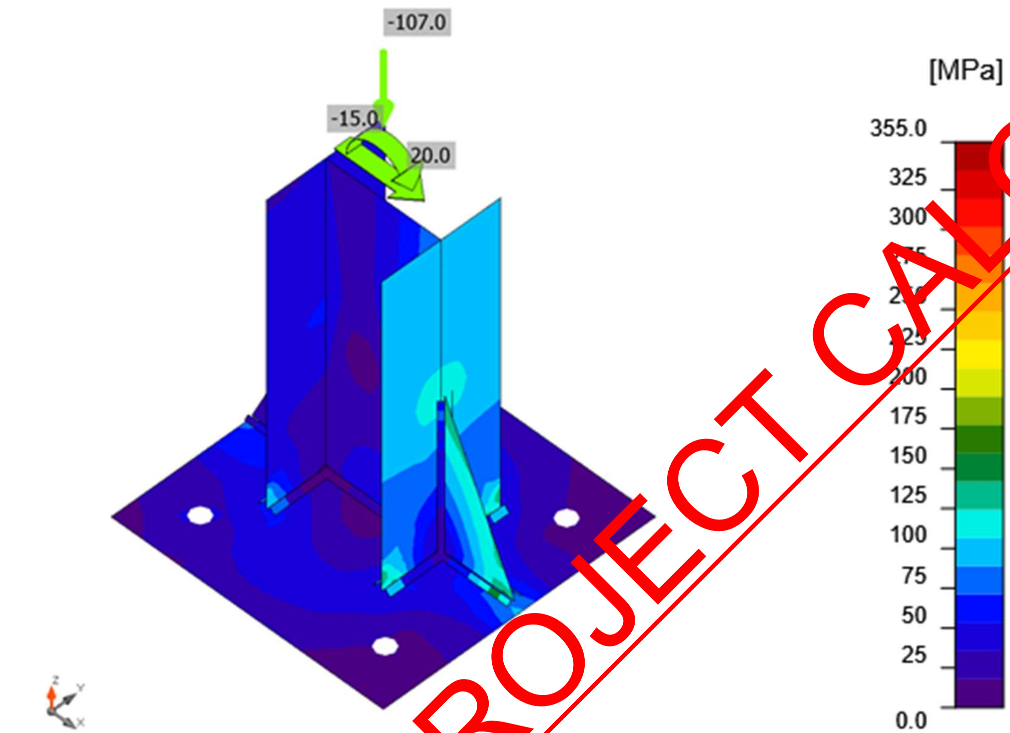

Equivalent stress, LE1

Anchors

Shape	Item	Loads	N_{Ed} [kN]	V_{Ed} [kN]	$N_{Rd,c}$ [kN]	$V_{Rd,c}$ [kN]	$V_{Rd,cp}$ [kN]	Ut_t [%]	Ut_s [%]	Ut_{ts} [%]	Status
	A1	LE1	20.3	3.7	296.6	-	537.2	14.8	3.8	5.5	OK
	A2	LE1	20.3	3.7	296.6	-	537.2	14.8	3.8	5.5	OK
	A3	LE1	0.0	3.8	-	81.8	537.2	0.0	18.3	7.9	OK
	A4	LE1	0.0	3.8	-	81.8	537.2	0.0	18.3	7.9	OK

Design data

Grade	$N_{Rd,s}$ [kN]	$V_{Rd,s}$ [kN]
M22 8.8 - 1	137.4	97.0

02 TOWERFIELDS WESTERHAM ROAD
BROMLEY, BR2 6HF
Email: info@Pearlepp.co.uk
Website: www. pearlepp.co.uk
Tel no. 02035763199

Detailed result for A3

Anchor tensile resistance (EN1992-4 - Cl. 7.2.1.3)

$N_{Rd,s} = \frac{N_{Rk,s}}{\gamma_{Ms}} =$ 137.4 kN ≥ $N_{Ed} =$ 0.0 kN

$N_{Rk,s} = c \cdot A_s \cdot f_{uk} =$ 206.0 kN

Where:

$c = 0.85$ – reduction factor for cut thread

$A_s = 303\ mm^2$ – tensile stress area

$f_{uk} = 800.0\ MPa$ – minimum tensile strength of the bolt

$\gamma_{Ms} = 1.50$ – safety factor for steel

$\gamma_{Ms} = 1.2 \cdot \frac{f_{uk}}{f_{yk}} \geq 1.4$

, where:

$f_{yk} =$

640.0 MPa – minimum yield strength of the bolt

Shear resistance (EN1992-4 - Cl.7.2.2.3.1)

$V_{Rd,s} = \frac{V_{Rk,s}}{\gamma_{Ms}} =$ 97.0 kN ≥ $V_{Ed} =$ 3.8 kN

$V_{Rk,s} = k_7 \cdot V^0_{Rk,s} =$ 121.2 kN

Where:

$k_7 = 1.00$ – coefficient for anchor steel ductility

$k_7 = \begin{cases} 0.8, & A < 0.08 \\ 1.0, & A \geq 0.08 \end{cases}$

, where:

$A =$

0.12 – bolt grade elongation at rupture

$V^0_{Rk,s} = 121.2\ kN$ – the characteristic shear strength

$V^0_{Rk,s} = k_6 \cdot A_s \cdot f_{uk}$

, where:

$k_6 =$

0.50 – coefficient for anchor resistance in shear

$A_s =$

303 mm² – tensile stress area

$f_{uk} =$

800.0 MPa – specified ultimate strength of anchor steel

$\gamma_{Ms} = 1.25$ – safety factor for steel

Concrete edge failure resistance (EN1992-4 - Cl. 7.2.2.5)
The check is performed for group of anchors that form shear breakout cones: A3, A4

$$V_{Rd,c} = \frac{V_{Rk,c}}{\gamma_{Mc}} = \quad 81.8 \text{ kN} \geq V_{Ed,g} = \quad 15.0 \text{ kN}$$

$$V_{Rk,c} = V^0_{Rk,c} \cdot \frac{A_{c,V}}{A^0_{c,V}} \cdot \psi_{s,V} \cdot \psi_{h,V} \cdot \psi_{ec,V} \cdot \psi_{re,V} = \quad 122.7 \text{ kN}$$

Where:

$V_{Ed,g} = 15.0$ kN – sum of shear forces of anchors on common base plate

$V^0_{Rk,c} = 184.7$ kN – initial value of the characteristic shear strength of the fastener

$V^0_{Rk,c} = k_9 \cdot d_{nom}^{\alpha} \cdot l_f^{\beta} \cdot \sqrt{f_{ck}} \cdot c_1^{1.5}$

, where:

$k_9 =$

1.70 – parameter accounting for the state of the concrete

$d_{nom} =$

22 mm – anchor diameter

$\alpha = 0.1 \cdot \left(\frac{l_f}{c_1}\right)^{0.5} =$

0.07 – factor

$l_f = \min(h_{ef}, 12 \cdot d) =$

264 mm – parameter related to the length of the fastener, where:

$h_{ef} =$

400 mm – anchor length embedded in concrete

$d_{nom} =$

22 mm – anchor diameter

$\beta = 0.1 \cdot \left(\frac{d_{nom}}{c_1}\right)^{0.2} =$

0.05 – factor

$f_{ck} =$

25.0 MPa – concrete compressive strength

$c_1 =$

556 mm – edge distance of fastener in direction 1 towards the edge in the direction of loading

$A_{c,V} = 1125900 \text{ mm}^2$ – actual area of idealised concrete break-out body

$A^0_{c,V} = 1391112 \text{ mm}^2$ – reference projected area of failure cone

$A^0_{c,V} = 4.5 \cdot c_1^2$

, where:

$c_1 =$

556 mm – edge distance of fastener in direction 1 towards the edge in the direction of loading

$\psi_{s,V} = 0.90$ – parameter related to the distribution of stresses in the concrete due to the proximity of the fastener to an edge of the concrete member:

$\psi_{s,V} = 0.7 + 0.3 \cdot \frac{c_2}{1.5 \cdot c_1} \leq 1$

, where:

$c_1 =$

556 mm – edge distance of fastener in direction 1 towards the edge in the direction of loading

$c_2 =$

PEARL ENGINEERS, PLANNERS & PROJECT MANAGERS

02 TOWERFIELDS WESTERHAM ROAD
BROMLEY, BR2 6HF
Email: info@Pearlepp.co.uk
Website: www. pearlepp.co.uk
Tel no. 02035763199

559 mm – edge distance of fastener perpendicular to direction 1 that is the smallest edge distance in a narrow member with multiple edge distances

$\psi_{h,V} = 0.91$ – modification factor for anchors located in a shallow concrete member:

$\psi_{h,V} = \left(\frac{1.5 \cdot c_1}{h}\right)^{0.5} \geq 1$

, where:

$h =$

1000 mm – concrete member thickness

$c_1 =$

556 mm – edge distance of fastener in direction 1 towards the edge in the direction of loading

$\psi_{ec,V} = 1.00$ – modification factor for anchor groups loaded eccentrically in shear:

$\psi_{ec,V} = \frac{1}{1+\frac{2 \cdot e_V}{3 \cdot c_1}} \leq 1$

, where:

$e_V =$

2 mm – shear load eccentricity

$c_1 =$

556 mm – edge distance of fastener in direction 1 towards the edge in the direction of loading

$\psi_{\alpha,V} = 1.00$ – modification factor for anchors loaded at an angle with the concrete edge

$\psi_{\alpha,V} = \sqrt{\frac{1}{(\cos \alpha_V)^2+(0.5 \cdot \sin \alpha_V)^2}} \geq 1$

, where:

$\alpha_V =$

0.0 ° – angle between the applied load to the fastener or fastener group and the direction perpendicular to the free edge under consideration

$\psi_{re,V} = 1.00$ – parameter accounting for the shell spalling effect, no edge reinforcement or stirrups are assumed

$\gamma_{Mc} = 1.50$ – safety factor for concrete

Concrete pryout resistance (EN1992-4 - Cl. 7.2.2.4)

The check is performed for group of anchors on common base plate

$V_{Rd,cp} = \frac{V_{Rk,cp}}{\gamma_{Mc}} =$ 537.2 kN ≥ $V_{Ed,g} =$ 15.0 kN

$V_{Rk,cp} = k_8 \cdot N_{Rk,c} =$ 805.8 kN

Where:

$k_8 = 2.00$ – factor taking into account fastener embedment depth

$N_{Rk,c} = 402.9$ kN – characteristic concrete cone strength for a single fastener or fastener in a group

$\gamma_{Mc} = 1.50$ – safety factor for concrete

Interaction of tensile and shear forces in steel (EN 1992-4 - Table 7.3)

$\left(\frac{N_{Ed}}{N_{Rd,s}}\right)^2 + \left(\frac{V_{Ed}}{V_{Rd,s}}\right)^2 =$ 0.00 ≤ 1.0

Where:

$N_{Ed} = 0.0$ kN – design tension force

$N_{Rd,s} = 137.4$ kN – fastener tensile strength

$V_{Ed} = 3.8$ kN – design shear force

$V_{Rd,s} = 97.0$ kN – fastener shear strength

Interaction of tensile and shear forces in concrete (EN 1992-4 - Table 7.3)

$\left(\frac{N_{Ed}}{N_{Rd,i}}\right)^{1.5} + \left(\frac{V_{Ed}}{V_{Rd,i}}\right)^{1.5} =$ 0.08 ≤ 1.0

Where:

$\frac{N_{Ed}}{N_{Rd,i}}$ – the largest utilization value for tension failure modes

$\frac{V_{Ed}}{V_{Rd,i}}$ – the largest utilization value for shear failure modes

$\frac{N_{Ed}}{N_{Rd,c}} = 0\%$ – concrete breakout failure of anchor in tension

$\frac{N_{Ed}}{N_{Rd,p}} = 0\%$ – concrete pullout failure

$\frac{N_{Ed}}{N_{Rd,sb}} = 0\%$ – concrete blowout failure

$\frac{V_{Ed}}{V_{Rd,c}} = 18\%$ – concrete edge failure

$\frac{V_{Ed}}{V_{Rd,cp}} = 2\%$ – concrete pryout failure

Welds (Plastic redistribution)

Item	Edge	Throat th. [mm]	Length [mm]	Loads	$\sigma_{w,Ed}$ [MPa]	ε_{Pl} [%]	$\sigma_{\perp}$ [MPa]	$\tau_{\|\|}$ [MPa]	$\tau_{\perp}$ [MPa]	Ut [%]	Ut_c [%]	Status
BP1	COL-bfl 1	◢9.0◣	153	LE1	101.6	0.0	-39.2	28.2	-46.2	23.3	11.4	OK
		◢9.0◣	153	LE1	105.7	0.0	-46.6	-37.9	39.5	24.3	13.0	OK
BP1	COL-tfl 1	◢9.0◣	153	LE1	92.7	0.0	37.3	-40.8	27.1	21.3	8.5	OK
		◢9.0◣	153	LE1	85.4	0.0	27.1	28.4	-37.1	19.6	7.1	OK
BP1	COL-w 1	◢9.0◣	148	LE1	21.5	0.0	-2.6	12.0	-2.6	4.9	3.6	OK
		◢9.0◣	148	LE1	21.5	0.0	-2.6	-12.0	2.6	4.9	3.6	OK

BP1	RIB1	◢6.5◣	90	LE1	39.4	0.0	16.2	-12.8	16.3	9.0	4.1	OK
		◢6.5◣	90	LE1	39.3	0.0	16.3	12.8	-16.2	9.0	4.1	OK
COL -tfl 1	RIB1	◢6.5◣	200	LE1	38.0	0.0	4.9	21.2	4.9	8.7	3.3	OK
		◢6.5◣	200	LE1	38.0	0.0	4.9	-21.2	-4.9	8.7	3.3	OK
BP1	RIB2	◢6.5◣	90	LE1	144.5	0.0	-65.5	35.3	-65.5	33.2	20.6	OK
		◢6.5◣	90	LE1	144.6	0.0	-65.5	-35.4	65.5	33.1	20.6	OK
COL -bfl 1	RIB2	◢6.5◣	200	LE1	72.2	0.0	-12.5	-39.1	-12.5	16.6	10.4	OK
		◢6.5◣	200	LE1	72.2	0.0	-12.5	39.1	12.5	16.6	10.4	OK

Design data

	β_w [-]	$\sigma_{w,Rd}$ [MPa]	0.9 σ [MPa]
S 355	0.90	435.6	352.8

Detailed result for BP1 RIB2

Weld resistance check (EN 1993-1-8 4.5.3.2)

$\sigma_{w,Rd} = f_u/(\beta_w \gamma_{M2}) =$ 435.6 MPa ≥ $\sigma_{w,Ed} = [\sigma_\perp^2 + 3(\tau_\perp^2 + \tau_\parallel^2)]^{0.5} =$ 144.6 MPa

$\sigma_{\perp,Rd} = 0.9 f_u/\gamma_{M2} =$ 352.8 MPa ≥ $|\sigma_\perp| =$ 65.5 MPa

where:

f_u = 490.0 MPa – Ultimate strength

β_w = 0.90 – appropriate correlation factor taken from Table 4.1

γ_{M2} = 1.25 – Safety factor

Stress utilization

$U = \max(\frac{\sigma_{w,Ed}}{\sigma_{w,Rd}}; \frac{|\sigma_\perp|}{\sigma_{\perp,Rd}}) =$ 33.2 %

Concrete block

Item	Loads	c [mm]	A_{eff} [mm^2]	σ [MPa]	k_j [-]	F_{jd} [MPa]	Ut [%]	Status
CB 1	LE1	41	27319	5.5	3.00	33.5	16.3	OK

Detailed result for CB 1

Concrete block compressive resistance check (EN 1993-1-8 6.2.5)

$\sigma = \frac{N}{A_{eff}} =$ 5.5 MPa

$F_{jd} = \alpha_{cc} \beta_j k_j f_{ck} / \gamma_c =$ 33.5 MPa

where:

$N =$ 149.5 kN	– Design normal force
$A_{eff} =$ 27319 mm^2	– Effective area, on which the column force N is distributed
$\alpha_{cc} =$ 1.00	– Long-term effects on Fcd
$\beta_j =$ 0.67	– Joint coefficient βj
$k_j =$ 3.00	– Concentration factor
$f_{ck} =$ 25.0 MPa	– Characteristic compressive concrete strength
$\gamma_c =$ 1.50	– Safety factor

Stress utilization

$U_t = \frac{\sigma}{F_{jd}} =$ 16.3 %

Buckling

Loads	Shape	Factor [-]
LE1	1	24.41
	2	24.61
	3	34.68
	4	41.21
	5	41.79
	6	42.19

Bill of material

Manufacturing operations

Name	Plates [mm]	Shape	Nr.	Welds [mm]	Length [mm]	Bolts	Nr.

PEPP
PEARL ENGINEERS, PLANNERS & PROJECT MANAGERS
02 TOWERFIELDS WESTERHAM ROAD
BROMLEY, BR2 6HF
Email: info@Pearlepp.co.uk
Website: www. pearlepp.co.uk
Tel no. 02035763199

BP1	P22.0x349.9-349.6 (S 355)		1	Double fillet: a = 9.0	454.0	M22 8.8	4
RIB1	P10.0x90.0-200.0 (S 355)		1	Double fillet: a = 6.5	290.0		
RIB2	P10.0x90.0-200.0 (S 355)		1	Double fillet: a = 6.5	290.0		

Welds

Type	Material	Throat thickness [mm]	Leg size [mm]	Length [mm]
Double fillet	S 355	9.0	12.7	454.0
Double fillet	S 355	6.5	9.2	580.0

Anchors

Name	Length [mm]	Drill length [mm]	Count
M22 8.8	422	400	4

Drawing

BP1

P22.0x350-350 (S 355)

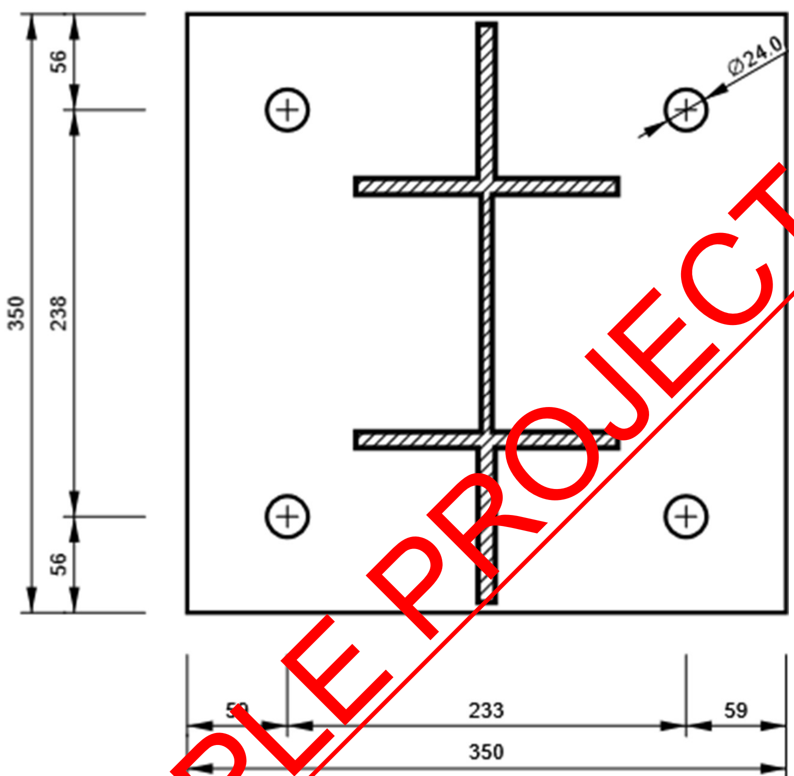

RIB1

P10.0x200-90 (S 355)

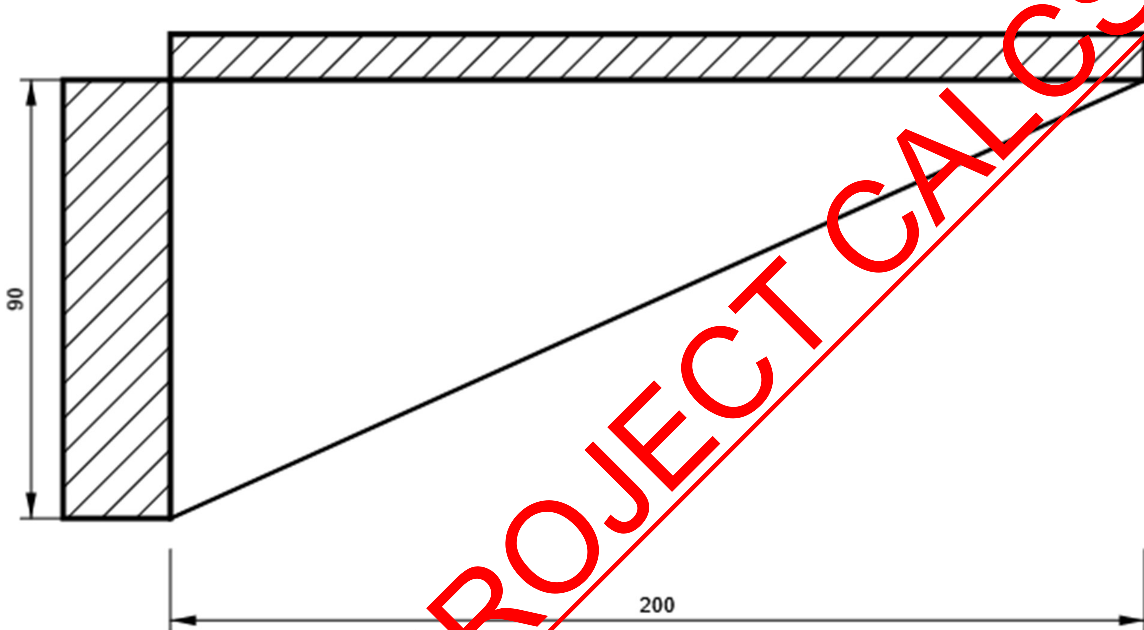

RIB2

P10.0x200-90 (S 355)

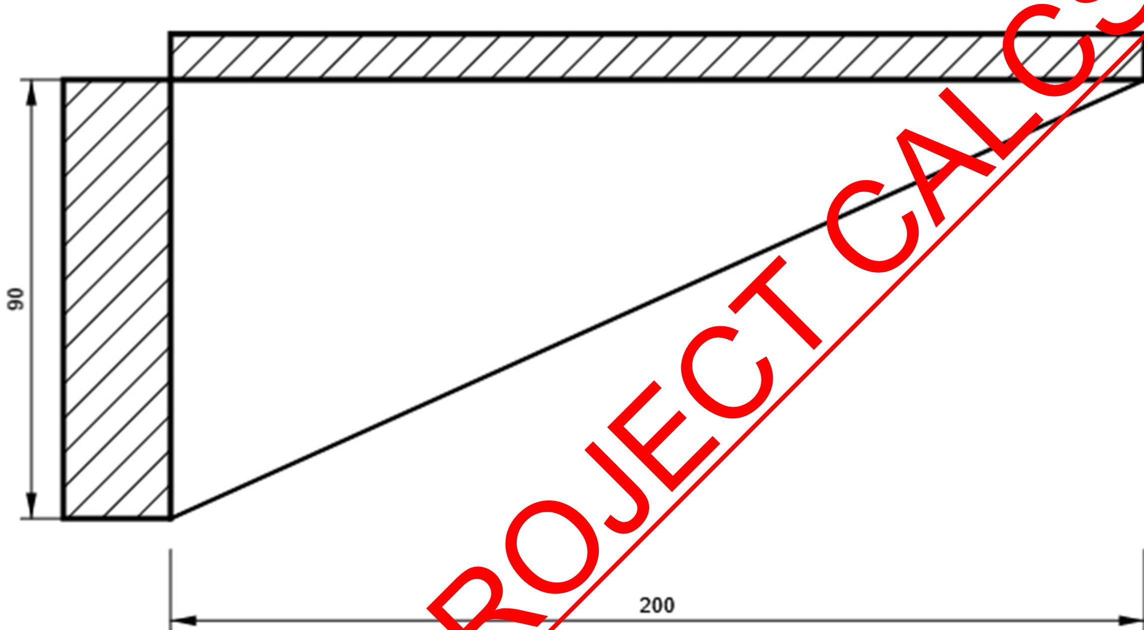

- **BP-3**

Project data

Project name	
Project number	
Author	
Description	
Date	
Design code	EN

Material

Steel	S 275
Concrete	C25/30

Project item BP-3

Design

Name	
Description	
Analysis	Stress, strain/ simplified loading

Beams and columns

Name	Cross-section	β – Direction [°]	γ - Pitch [°]	α - Rotation [°]	Offset ex [mm]	Offset ey [mm]	Offset ez [mm]	Forces in
COL	2 - SHS100/100/5.0	0.0	-90.0	0.0	0	0	0	Node

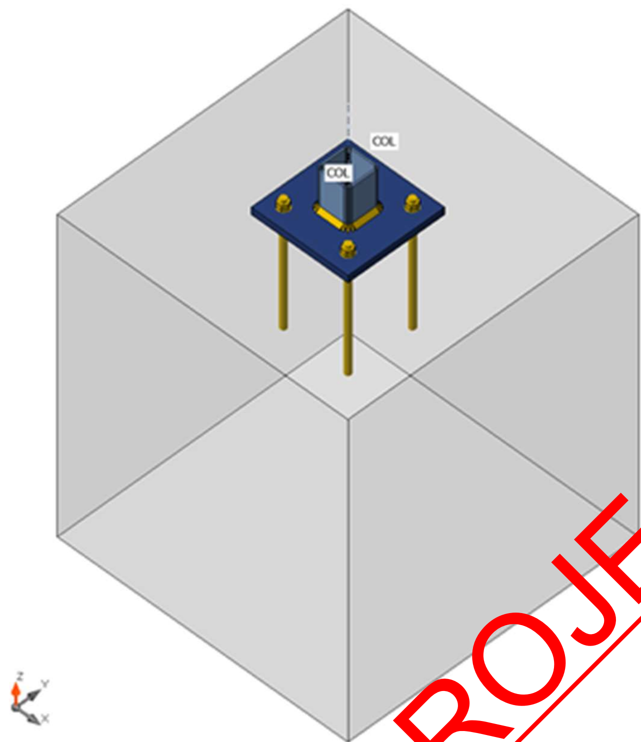

COL
COL

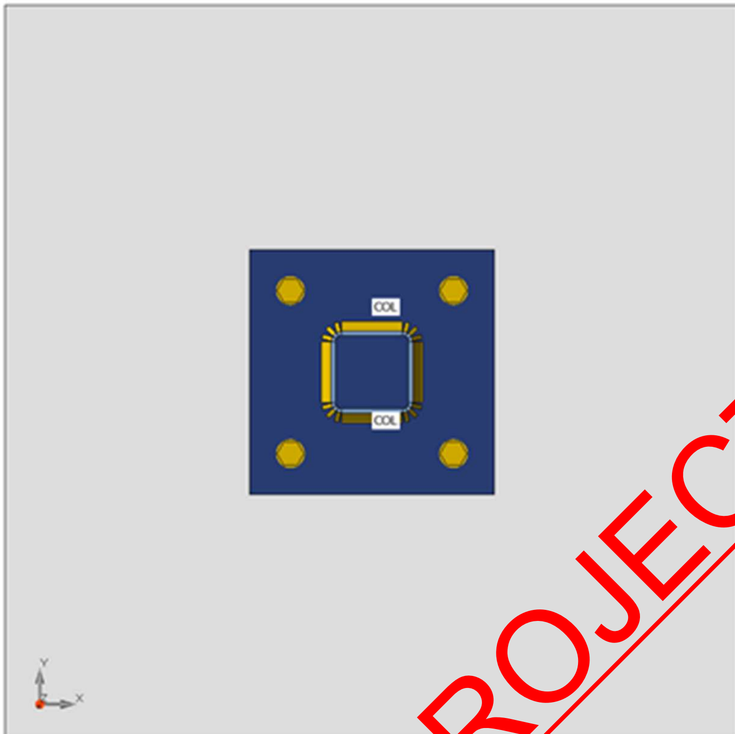
COL
COL
Y
X

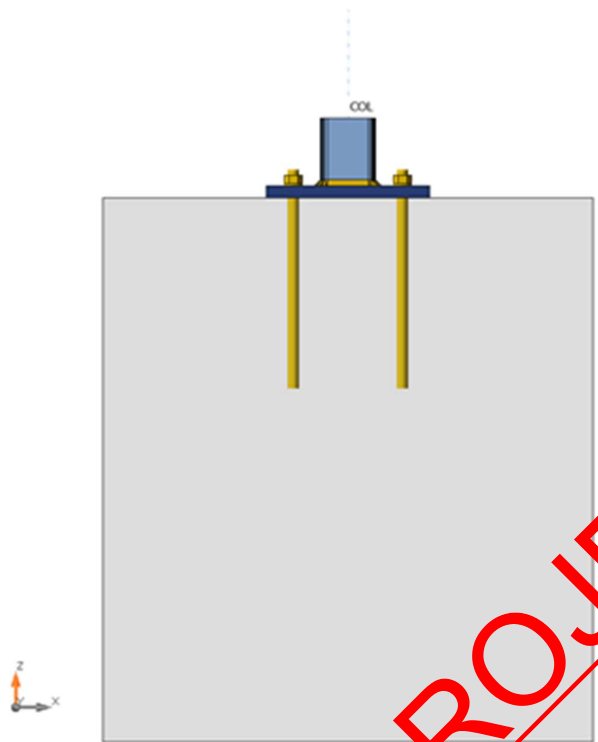

COL
z
x

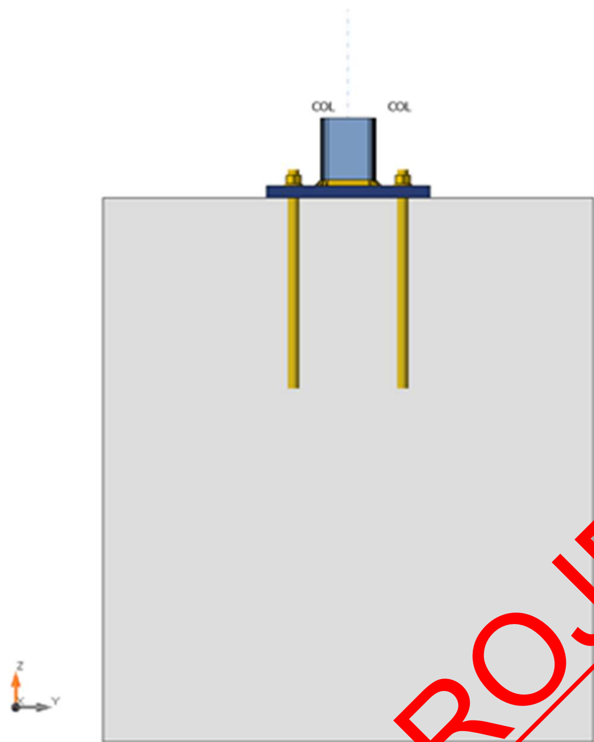

Cross-sections

Name	Material
2 - SHS100/100/5.0	S 275

Cross-sections

Name	Material	Drawing
2 - SHS100/100/5.0	S 275	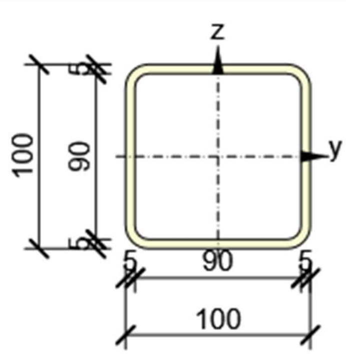

Anchors

Name	Bolt assembly	Diameter [mm]	fu [MPa]	Gross area [mm²]
M20 8.8	M20 8.8	20	800.0	314

Load effects (equilibrium not required)

Name	Member	N [kN]	Vy [kN]	Vz [kN]	Mx [kNm]	My [kNm]	Mz [kNm]
LE1	COL	-145.0	2.0	1.0	2.0	2.0	0.0

Foundation block

Item	Value	Unit
CB 1		
Dimensions	900 x 900	mm
Depth	1000	mm
Anchor	M20 8.8	
Anchoring length	350	mm
Shear force transfer	Friction	

Check

Summary

Name	Value	Status
Analysis	100.0%	OK
Plates	0.0 < 5.0%	OK
Anchors	1.9 < 100%	OK
Welds	36.4 < 100%	OK
Concrete block	16.0 < 100%	OK
Shear	6.0 < 100%	OK
Buckling	22.97	

Plates

Name	Thickness [mm]	Loads	σ_{Ed} [MPa]	ε_{Pl} [%]	σc_{Ed} [MPa]	Status
COL	5.0	LE1	207.5	0.0	0.0	OK
BP1	22.0	LE1	62.3	0.0	0.0	OK

Design data

Material	f_y [MPa]	ε_{lim} [%]
S 275	275.0	5.0

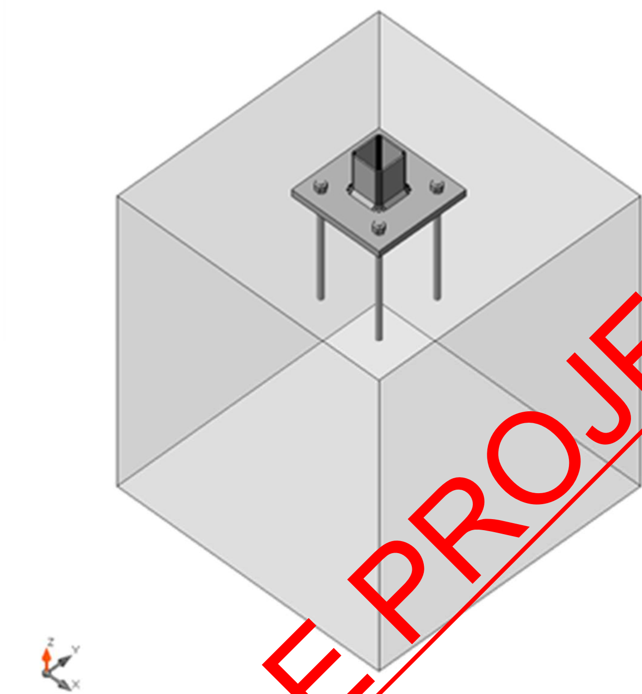

Overall check, LE1

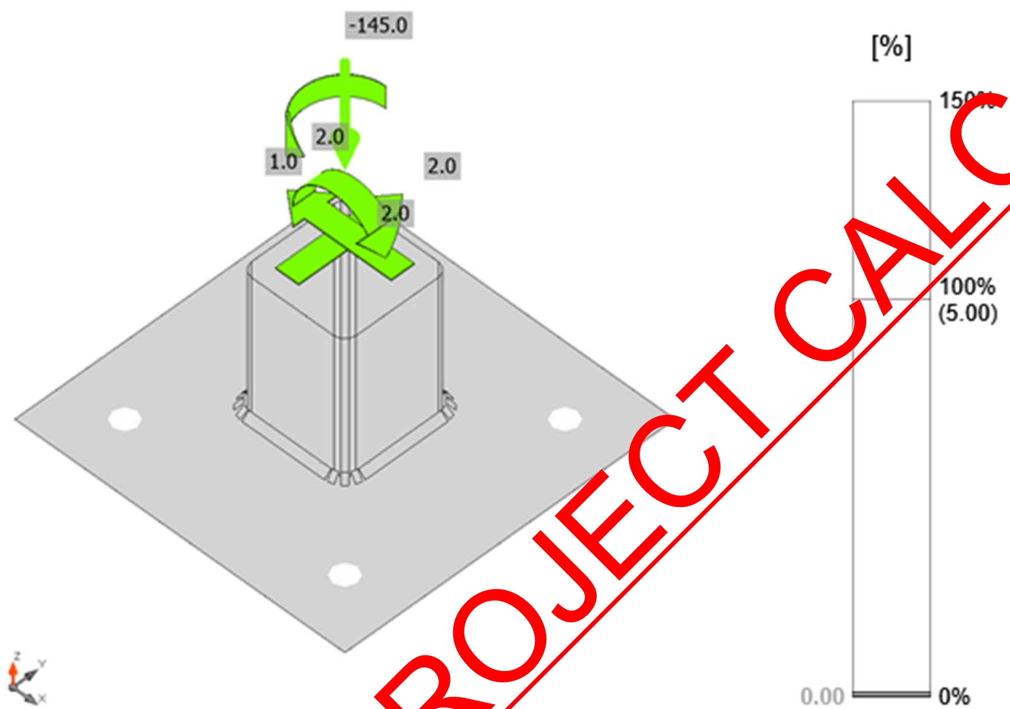

Strain check, LE1

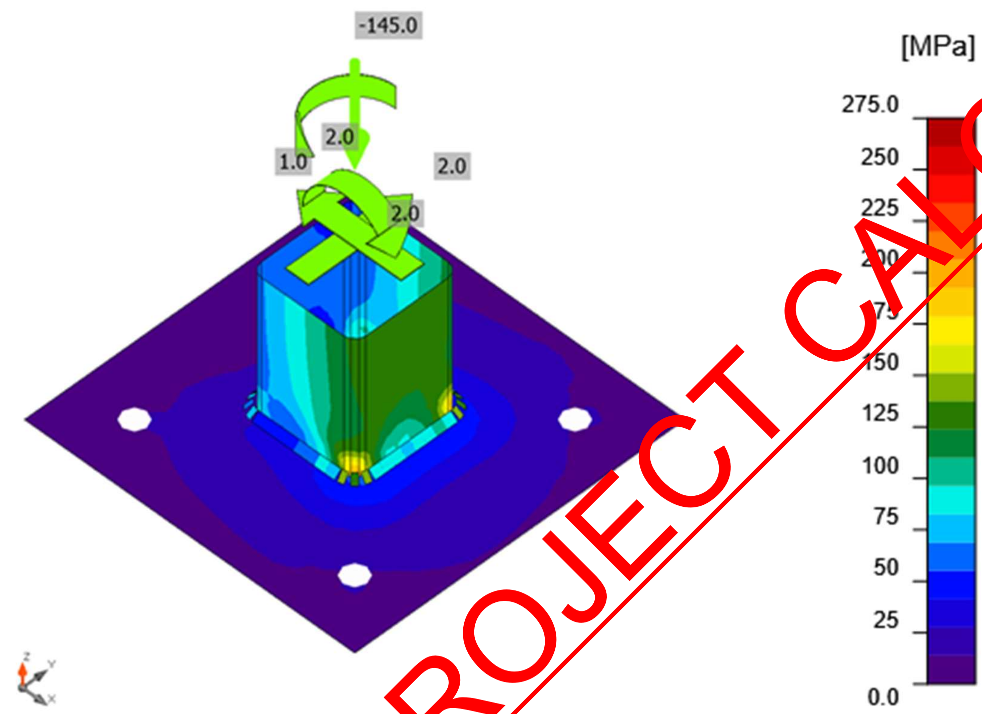

Equivalent stress, LE1

Anchors

Shape	Item	Loads	N_{Ed} [kN]	V_{Ed} [kN]	$N_{Rd,c}$ [kN]	$V_{Rd,cp}$ [kN]	Ut_t [%]	Ut_s [%]	Ut_{ts} [%]	Status
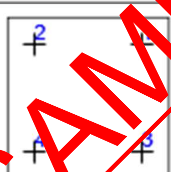	A1	LE1	0.9	0.0	97.1	302.1	1.9	0.0	0.3	OK
	A2	LE1	1.0	0.0	97.1	302.1	1.9	0.0	0.3	OK
	A3	LE1	0.0	0.0	-	302.1	0.0	0.0	0.0	OK
	A4	LE1	0.0	0.0	-	302.1	0.0	0.0	0.0	OK

Design data

Grade	$N_{Rd,s}$ [kN]	$V_{Rd,s}$ [kN]
M20 8.8 - 1	111.1	78.4

Detailed result for A1

Anchor tensile resistance (EN1992-4 - Cl. 7.2.1.3)

$N_{Rd,s} = \frac{N_{Rk,s}}{\gamma_{Ms}} =$ 111.1 kN ≥ $N_{Ed} =$ 0.9 kN

$N_{Rk,s} = c \cdot A_s \cdot f_{uk} =$ 166.6 kN

Where:

$c = 0.85$ – reduction factor for cut thread

$A_s = 245\ mm^2$ – tensile stress area

$f_{uk} = 800.0$ MPa – minimum tensile strength of the bolt

$\gamma_{Ms} = 1.50$ – safety factor for steel

$\gamma_{Ms} = 1.2 \cdot \frac{f_{uk}}{f_{yk}} \geq 1.4$

, where:

$f_{yk} =$

640.0 MPa – minimum yield strength of the bolt

Concrete breakout resistance of anchor in tension (EN1992-4 - Cl. 7.2.1.4)
The check is performed for group of anchors that form common tension breakout cone: A1, A2

$N_{Rd,c} = \frac{N_{Rk,c}}{\gamma_{Mc}} =$ 97.1 kN ≥ $N_{Ed,g} =$ 1.9 kN

$N_{Rk,c} = N^0_{Rk,c} \cdot \frac{A_{c,N}}{A^0_{c,N}} \cdot \psi_{s,N} \cdot \psi_{re,N} \cdot \psi_{ec,N} \cdot \psi_{M,N} =$ 174.7 kN

Where:

$N_{Ed,g} = 1.9$ kN – sum of tension forces of anchors with common concrete breakout cone area

$N^0_{Rk,c} = 137.2$ kN – characteristic strength of a fastener, remote from the effects of adjacent fasteners or edges of the concrete member

$N^0_{Rk,c} = k_1 \cdot \sqrt{f_c} \cdot h_{ef}^{1.5}$

, where:

$k_1 =$

7.70 – parameter accounting for anchor type and concrete condition

$f_c =$

25.0 MPa – concrete compressive strength

$h_{ef} = \min(h_{emb}, \max(\frac{c_{a,max}}{1.5}, \frac{s_{max}}{3})) =$

233 mm – depth of embedment, where:

$h_{emb} =$

350 mm – anchor length embedded in concrete

$c_{a,max} =$

350 mm – maximum distance from the anchor to one of the three closest edges

$s_{max} =$

200 mm – maximum spacing between anchors

$A_{c,N} = 629300\ \text{mm}^2$ – concrete breakout cone area for group of anchors

$A^0_{c,N} = 490000\ \text{mm}^2$ – concrete breakout cone area for single anchor not influenced by edges

$A^0_{c,N} = (3 \cdot h_{ef})^2$

, where:

$h_{ef} =$

233 mm – depth of embedment

$\psi_{s,N} = 1.00$ – parameter related to the distribution of stresses in the concrete due to the proximity of the fastener to an edge of the concrete member:

$\psi_{s,N} = 0.7 + 0.3 \cdot \frac{c}{1.5 \cdot h_{ef}} \leq 1$

, where:

$c =$

350 mm – minimum distance from the anchor to the edge

$h_{ef} =$

233 mm – depth of embedment

$\psi_{re,N} = 1.00$ – parameter accounting for the shell spalling:

$\psi_{re,N} = 0.5 + \frac{h_{emb}}{200} \leq 1$

, where:

$h_{emb} =$

350 mm – anchor length embedded in concrete

$\psi_{ec,N} = 0.99$ – modification factor for anchor groups loaded eccentrically in tension:

$\psi_{ec,N} = \psi_{ecx,N} \cdot \psi_{ecy,N}$

, where:

$\psi_{ecx,N} = \frac{1}{1+\frac{2 \cdot e_{x,N}}{3 \cdot h_{ef}}} =$

1.00 – modification factor that depends on eccentricity in x-direction

$e_{x,N} =$

0 mm – tension load eccentricity in x-direction

$\psi_{ecy,N} = \frac{1}{1+\frac{2 \cdot e_{y,N}}{3 \cdot h_{ef}}} =$

0.99 – modification factor that depends on eccentricity in y-direction

$e_{y,N} =$

3 mm – tension load eccentricity in y-direction

$h_{ef} =$

233 mm – depth of embedment

$\psi_{M,N} = 1.00$ – parameter accounting for the effect of a compression force between the fixture and concrete; this parameter is equal to 1 if c < 1.5h_{ef} or the ratio of the compressive force (including the compression due to bending) to the sum of tensile forces in anchors is smaller than 0.8

$\psi_{M,N} = 2 - \frac{2 \cdot z}{3 \cdot h_{ef}} \geq 1$

, where:

$z =$

113 mm – internal lever arm

$h_{ef} =$

233 mm – depth of embedment

γ_{Mc} = 1.80 – safety factor for concrete

Shear resistance (EN1992-4 - Cl.7.2.2.3.1)

$V_{Rd,s} = \frac{V_{Rk,s}}{\gamma_{Ms}} =$ 78.4 kN ≥ $V_{Ed} =$ 0.0 kN

$V_{Rk,s} = k_7 \cdot V^0_{Rk,s} =$ 98.0 kN

Where:

k_7 = 1.00 – coefficient for anchor steel ductility

$$k_7 = \begin{cases} 0.8, & A < 0.08 \\ 1.0, & A \geq 0.08 \end{cases}$$

, where:

$A =$

0.12 – bolt grade elongation at rupture

$V^0_{Rk,s}$ = 98.0 kN – the characteristic shear strength

$V^0_{Rk,s} = k_6 \cdot A_s \cdot f_{uk}$

, where:

$k_6 =$

0.50 – coefficient for anchor resistance in shear

$A_s =$

245 mm^2 – tensile stress area

$f_{uk} =$

800.0 MPa – specified ultimate strength of anchor steel

γ_{Ms} = 1.25 – safety factor for steel

Concrete pryout resistance (EN1992-4 - Cl. 7.2.2.4)

The check is performed for group of anchors on common base plate

$V_{Rd,cp} = \frac{V_{Rk,cp}}{\gamma_{Mc}} =$ 302.1 kN ≥ $V_{Ed,g} =$ 0.0 kN

$V_{Rk,cp} = k_8 \cdot N_{Rk,c} =$ 453.2 kN

Where:

k_8 = 2.00 – factor taking into account fastener embedment depth

$N_{Rk,c}$ = 226.6 kN – characteristic concrete cone strength for a single fastener or fastener in a group

γ_{Mc} = 1.50 – safety factor for concrete

Interaction of tensile and shear forces in steel (EN 1992-4 - Table 7.3)

$\left(\frac{N_{Ed}}{N_{Rd,s}}\right)^2 + \left(\frac{V_{Ed}}{V_{Rd,s}}\right)^2 =$ 0.00 ≤ 1.0

Where:

N_{Ed} = 0.9 kN – design tension force

$N_{Rd,s}$ = 111.1 kN – fastener tensile strength

V_{Ed} = 0.0 kN – design shear force

$V_{Rd,s}$ = 78.4 kN – fastener shear strength

Interaction of tensile and shear forces in concrete (EN 1992-4 - Table 7.3)

$(\frac{N_{Ed}}{N_{Rd,i}})^{1.5} + (\frac{V_{Ed}}{V_{Rd,i}})^{1.5} =$ 0.00 ≤ 1.0

Where:

$\frac{N_{Ed}}{N_{Rd,i}}$ – the largest utilization value for tension failure modes

$\frac{V_{Ed}}{V_{Rd,i}}$ – the largest utilization value for shear failure modes

$\frac{N_{Ed}}{N_{Rd,c}}$ = 1% – concrete breakout failure of anchor in tension

$\frac{N_{Ed}}{N_{Rd,p}}$ = 0% – concrete pullout failure

$\frac{N_{Ed}}{N_{Rd,cb}}$ = 0% – concrete blowout failure

$\frac{V_{Ed}}{V_{Rd,c}}$ = 0% – concrete edge failure

$\frac{V_{Ed}}{V_{Rd,cp}}$ = 0% – concrete pryout failure

Welds (Plastic redistribution)

Item	Edge	Throat th. [mm]	Length [mm]	Loads	$\sigma_{w,Ed}$ [MPa]	ε_{Pl} [%]	$\sigma_\perp$ [MPa]	$\tau_{\parallel}$ [MPa]	$\tau_\perp$ [MPa]	Ut [%]	Ut_c [%]	Status
BP1	COL	◢8.5	362	LE1	147.5	0.0	-93.1	33.0	57.2	36.4	17.3	OK

Design data

	β_w [-]	$\sigma_{w,Rd}$ [MPa]	0.9 σ [MPa]
S 275	0.85	404.7	309.6

Detailed result for BP1 COL

Weld resistance check (EN 1993-1-8 4.5.3.2)

$\sigma_{w,Rd} = f_u/(\beta_w \gamma_{M2}) =$ 404.7 MPa ≥ $\sigma_{w,Ed} = [\sigma_\perp^2 + 3(\tau_\perp^2 + \tau_\parallel^2)]^{0.5} =$ 147.5 MPa

$\sigma_{\perp,Rd} = 0.9 f_u / \gamma_{M2} =$ 309.6 MPa ≥ $|\sigma_\perp| =$ 93.1 MPa

where:

$f_u =$ 430.0 MPa – Ultimate strength

$\beta_w =$ 0.85 – appropriate correlation factor taken from Table 4.1

$\gamma_{M2} =$ 1.25 – Safety factor

Stress utilization

$U_t = \max(\frac{\sigma_{w,Ed}}{\sigma_{w,Rd}}; \frac{|\sigma_\perp|}{\sigma_{\perp,Rd}}) =$ 36.4 %

Concrete block

Item	Loads	c [mm]	A_{eff} [mm^2]	σ [MPa]	k_j [-]	F_{jd} [MPa]	Ut [%]	Status
CB 1	LE1	36	27573	5.4	3.00	33.5	16.0	OK

Detailed result for CB 1

Concrete block compressive resistance check (EN 1993-1-8 6.2.5)

$\sigma = \frac{N}{A_{eff}} =$ 5.4 MPa

$F_{jd} = \alpha_{cc} \beta_j k_j f_{ck} / \gamma_c =$ 33.5 MPa

where:

$N =$ 147.9 kN – Design normal force

$A_{eff} =$ 27573 mm^2 – Effective area, on which the column force N is distributed

$\alpha_{cc} =$ 1.00 – Long-term effects on Fcd

$\beta_j =$ 0.67 – Joint coefficient βj

$k_j =$ 3.00 – Concentration factor

$f_{ck} =$ 25.0 MPa – Characteristic compressive concrete strength

$\gamma_c =$ 1.50 – Safety factor

Stress utilization

$U_t = \frac{\sigma}{F_{jd}} =$ 16.0 %

Shear in contact plane

Name	Loads	V_y [kN]	V_z [kN]	$V_{Rd,y}$ [kN]	$V_{Rd,z}$ [kN]	$V_{c,Rd}$ [kN]	Ut [%]	Status

BP1	LE1	2.0	1.0	37.0	37.0	0.0	6.0	OK

Detailed result for BP1

Base plate shear resistance check (EN 1993-1-8 - 6.2.2)

$V_{Rd,y} = NC_f =$ 37.0 kN

$V_{Rd,z} = NC_f =$ 37.0 kN

where:

$N =$ 147.9 kN – Design normal force

$C_f = 0.25$ – Friction coefficient

Utilization in shear

$U_t = \max\left(\frac{\sqrt[2]{Vy^2+Vz^2}}{V_{Rd,y}}, \frac{\sqrt[2]{Vy^2+Vz^2}}{V_{Rd,z}}\right) =$ 6.0 %

Buckling

Loads	Shape	Factor [-]
LE1	1	22.37
	2	28.31
	3	3[illegible].75
	4	39.00
	5	40.10
	6	46.02

Bill of material

Manufacturing operations

Name	Plates [mm]	Shape	Nr.	Welds [mm]	Length [mm]	Bolts	Nr.
BP1	P22.0x300.0-300.0 (S 275)	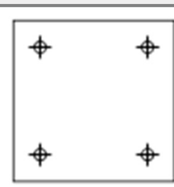	1	Fillet: a = 8.5	362.1	M20 8.8	4

Welds

Type	Material	Throat thickness [mm]	Leg size [mm]	Length [mm]
Fillet	S 275	8.5	12.0	362.1

Anchors

Name	Length [mm]	Drill length [mm]	Count
M20 8.8	372	350	4

Drawing

BP1

P22.0x300-300 (S 275)

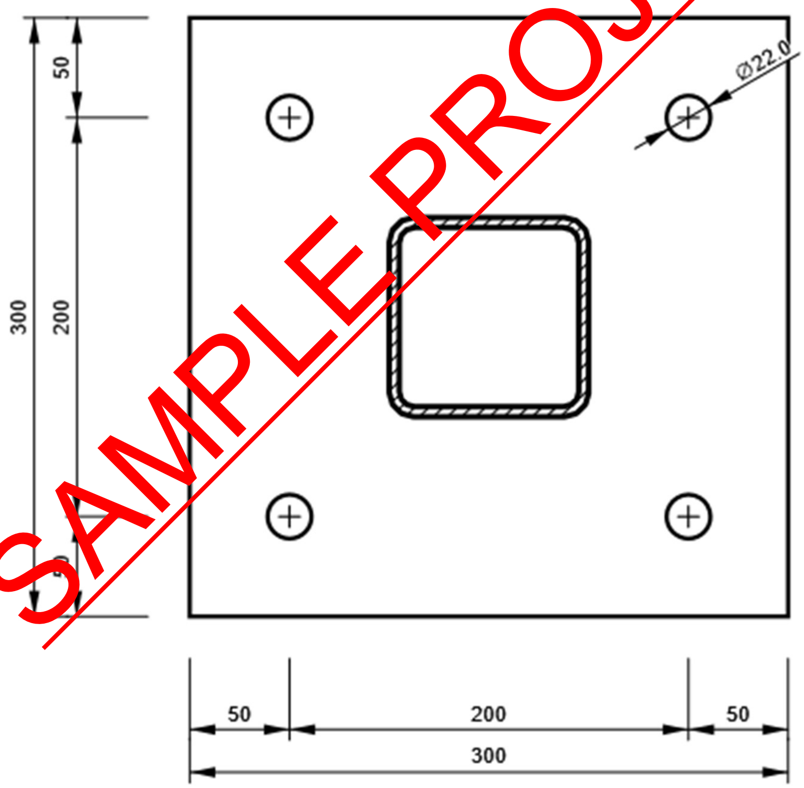

- **BP-4**

Project data

Project name	
Project number	
Author	
Description	
Date	
Design code	EN

Material

Steel	S 275
Concrete	C25/30

Project item BP-4

Design

Name	BP-4
Description	
Analysis	Stress, strain/ simplified loading

Beams and columns

Name	Cross-section	β – Direction [°]	γ - Pitch [°]	α - Rotation [°]	Offset ex [mm]	Offset ey [mm]	Offset ez [mm]	Forces in
COL	3 - CHS88.9/5.0	0.0	-90.0	0.0	0	0	0	Node

PEPP 02 TOWERFIELDS WESTERHAM ROAD BROMLEY, BR2 6HF Email: info@Pearlepp.co.uk Website: www. pearlepp.co.uk Tel no. 02035763199	**Project:** 68 GROVE PARK RD UK		**Sheet No./Rev.** 561
	Job Ref. 2024-06-	**Structural Engineer** **MM**	**Date** **11/06/2024**

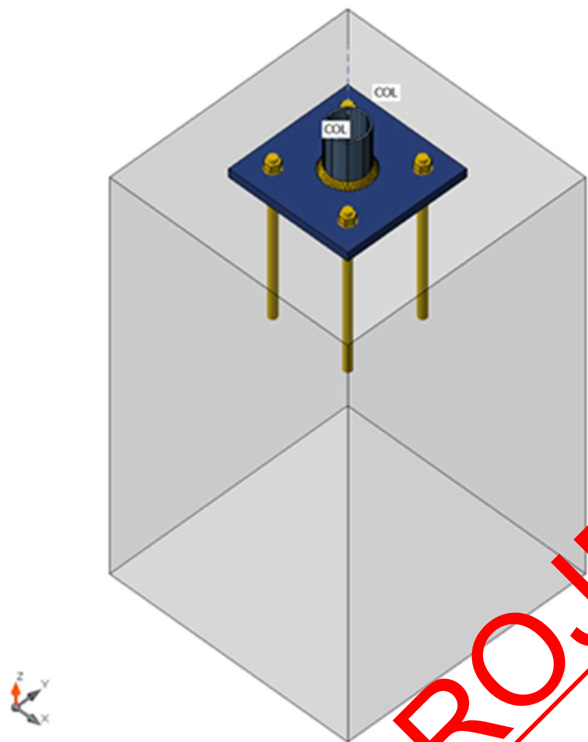

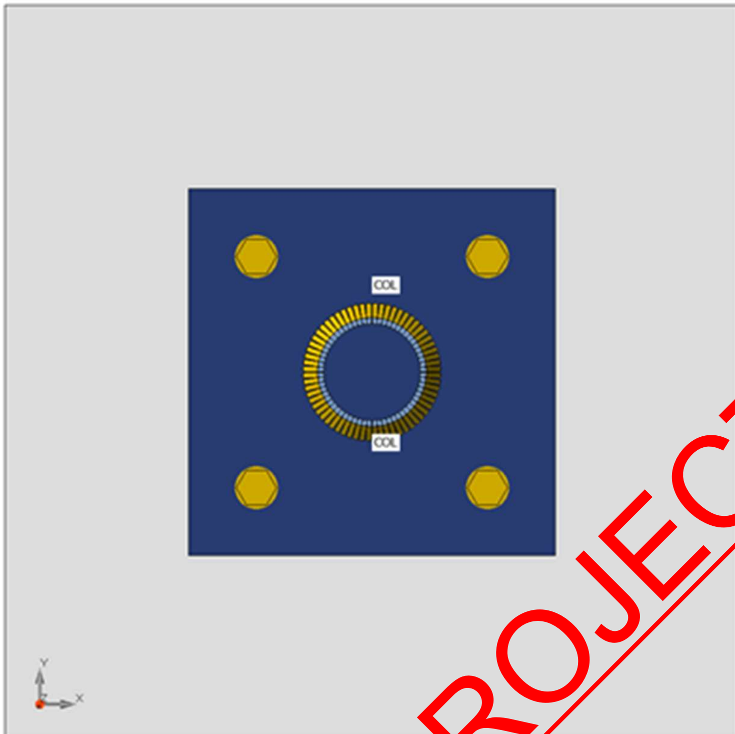

COL
COL
Y
X

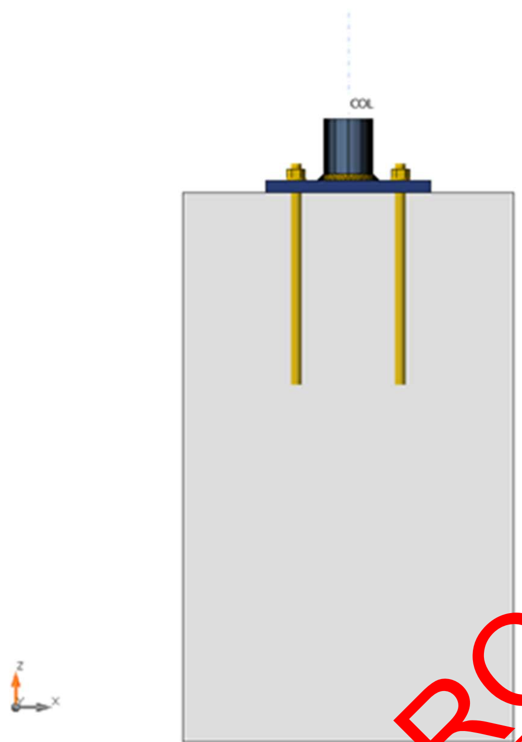

COL
z
x

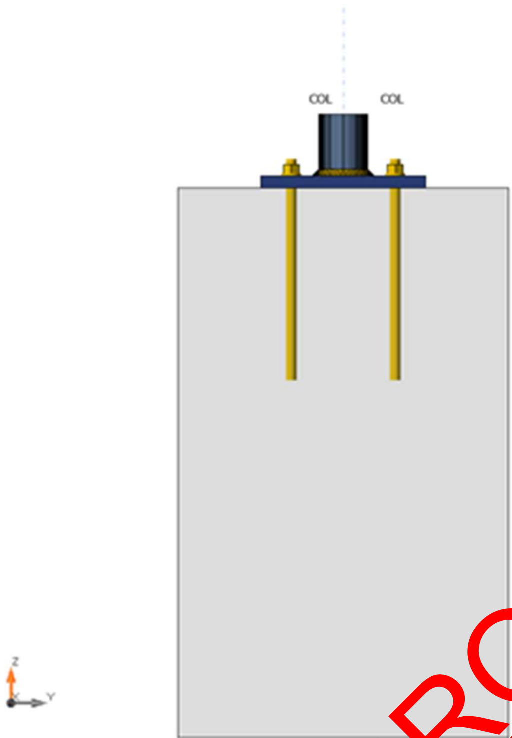

Cross-sections

Name	Material
3 - CHS88.9/5.0	S 275

Cross-sections

Name	Material	Drawing
3 - CHS88.9/5.0	S 275	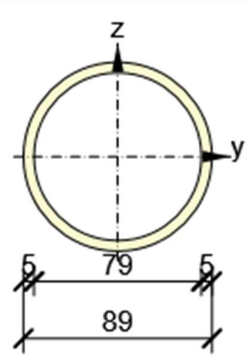

Anchors

Name	Bolt assembly	Diameter [mm]	fu [MPa]	Gross area [mm^2]
M20 8.8	M20 8.8	20	800.0	314

Load effects (equilibrium not required)

Name	Member	N [kN]	Vy [kN]	Vz [kN]	Mx [kNm]	My [kNm]	Mz [kNm]
LE1	COL	-145.0	2.0	1.0	2.0	2.0	0.0

Foundation block

Item	Value	Unit
CB 1		
Dimensions	600 x 600	mm
Depth	1000	mm
Anchor	M20 8.8	
Anchoring length	350	mm
Shear force transfer	Friction	

Check

Summary

Name	Value	Status
Analysis	100.0%	OK
Plates	0.0 < 5.0%	OK
Anchors	4.7 < 100%	OK
Welds	41.0 < 100%	OK
Concrete block	21.7 < 100%	OK
Shear	6.0 < 100%	OK
Buckling	59.43	

Plates

Name	Thickness [mm]	Loads	σ_{Ed} [MPa]	ε_{Pl} [%]	σc_{Ed} [MPa]	Status
COL	5.0	LE1	230.8	0.0	0.0	OK
BP1	22.0	LE1	89.6	0.0	0.0	OK

Design data

Material	f_y [MPa]	ε_{lim} [%]
S 275	275.0	5.0

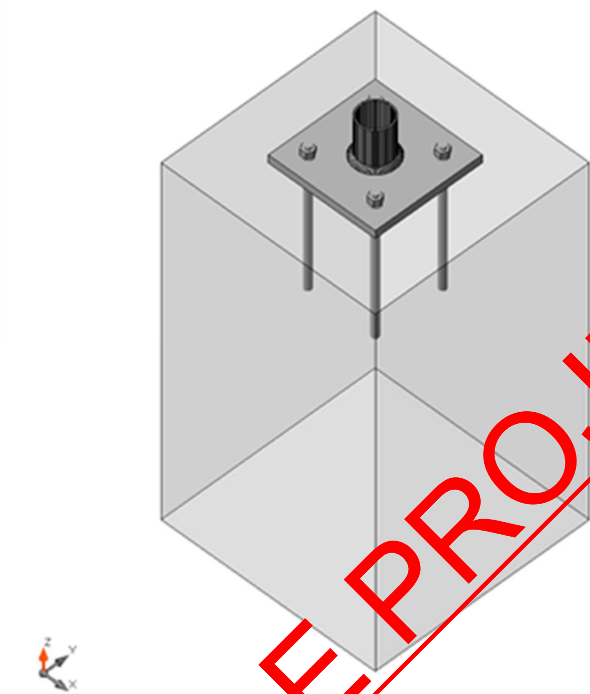

Overall check, LE1

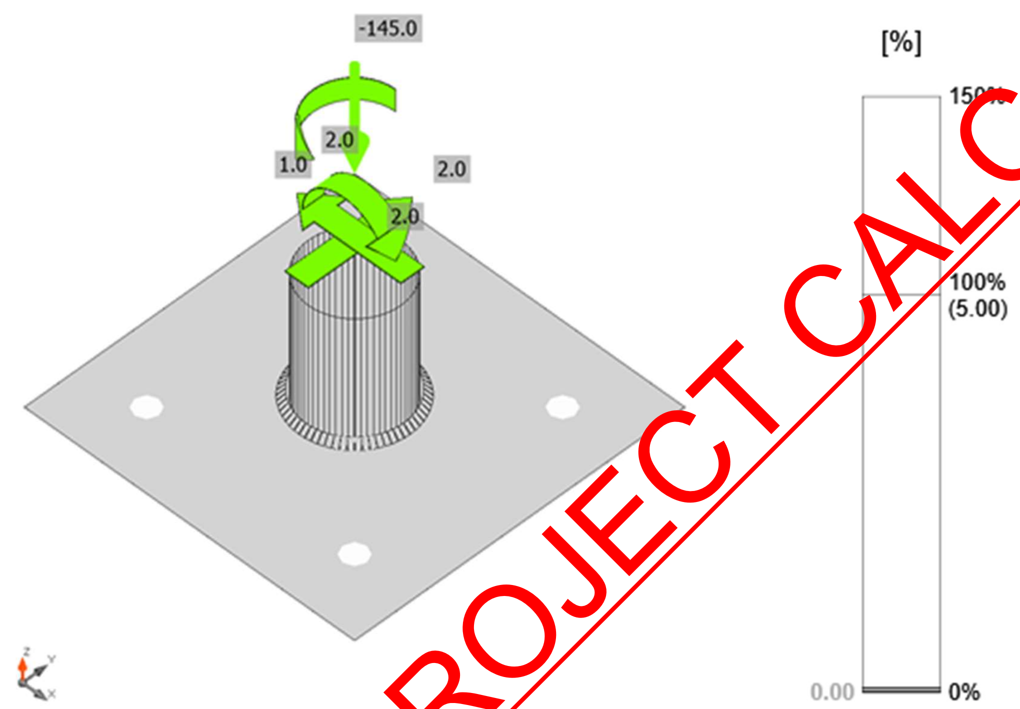

Strain check, LE1

PEPP
PEARL ENGINEERS, PLANNERS & PROJECT MANAGERS
02 TOWERFIELDS WESTERHAM ROAD
BROMLEY, BR2 6HF
Email: info@Pearlepp.co.uk
Website: www. pearlepp.co.uk
Tel no. 02035763199

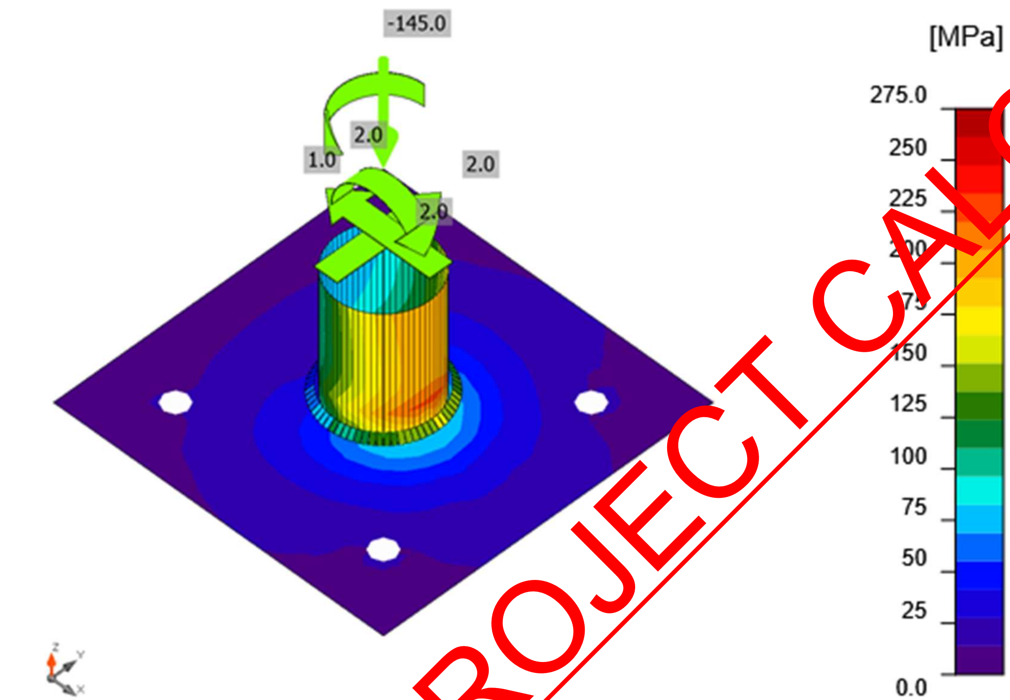

Equivalent stress, LE1

Anchors

Shape	Item	Loads	N_{Ed} [kN]	V_{Ed} [kN]	$N_{Rd,c}$ [kN]	$V_{Rd,cp}$ [kN]	Ut_t [%]	Ut_s [%]	Ut_{ts} [%]	Status
	A1	LE1	1.5	0.0	65.5	174.8	4.7	0.0	1.0	OK
	A2	LE1	1.6	0.0	65.5	174.8	4.7	0.0	1.0	OK
	A3	LE1	0.0	0.0	-	174.8	0.0	0.0	0.0	OK
	A4	LE1	0.0	0.0	-	174.8	0.0	0.0	0.0	OK

Design data

Grade	$N_{Rd,s}$ [kN]	$V_{Rd,s}$ [kN]
M20 8.8 - 1	111.1	78.4

Detailed result for A1

Anchor tensile resistance (EN1992-4 - Cl. 7.2.1.3)

$N_{Rd,s} = \frac{N_{Rk,s}}{\gamma_{Ms}} =$ 111.1 kN $\geq$ $N_{Ed} =$ 1.5 kN

$N_{Rk,s} = c \cdot A_s \cdot f_{uk} =$ 166.6 kN

Where:

$c = 0.85$ – reduction factor for cut thread

$A_s = 245\ mm^2$ – tensile stress area

$f_{uk} = 800.0$ MPa – minimum tensile strength of the bolt

$\gamma_{Ms} = 1.50$ – safety factor for steel

$\gamma_{Ms} = 1.2 \cdot \frac{f_{uk}}{f_{yk}} \geq 1.4$

, where:

$f_{yk} =$

640.0 MPa – minimum yield strength of the bolt

Concrete breakout resistance of anchor in tension (EN1992-4 - Cl. 7.2.1.4)
The check is performed for group of anchors that form common tension breakout cone: A1, A2, A4

$N_{Rd,c} = \frac{N_{Rk,c}}{\gamma_{Mc}} =$ 65.5 kN $\geq$ $N_{Ed,g} =$ 3.1 kN

$N_{Rk,c} = N^0_{Rk,c} \cdot \frac{A_{c,N}}{A^0_{c,N}} \cdot \psi_{s,N} \cdot \psi_{re,N} \cdot \psi_{ec,N} \cdot \psi_{M,N} =$ 117.8 kN

Where:

$N_{Ed,g} = 3.1$ kN – sum of tension forces of anchors with common concrete breakout cone area

$N^0_{Rk,c} = 61.7$ kN – characteristic strength of a fastener, remote from the effects of adjacent fasteners or edges of the concrete member

$N^0_{Rk,c} = k_1 \cdot \sqrt{f_c} \cdot h_{ef}^{1.5}$

, where:

$k_1 =$

7.70 – parameter accounting for anchor type and concrete condition

$f_c =$

25.0 MPa – concrete compressive strength

$h_{ef} = \min(h_{emb}, \max(\frac{c_{a,max}}{1.5}, \frac{s_{max}}{3})) =$

137 mm – depth of embedment, where:

$h_{emb} =$

350 mm – anchor length embedded in concrete

$c_{a,max} =$

206 mm – maximum distance from the anchor to one of the three closest edges

$s_{max} =$

189 mm – maximum spacing between anchors

$A_{c,N}$ = 323269 mm^2 – concrete breakout cone area for group of anchors

$A^0_{c,N}$ = 168921 mm^2 – concrete breakout cone area for single anchor not influenced by edges

$A^0_{c,N} = (3 \cdot h_{ef})^2$

, where:

h_{ef} =

137 mm – depth of embedment

$\psi_{s,N}$ = 1.00 – parameter related to the distribution of stresses in the concrete due to the proximity of the fastener to an edge of the concrete member:

$\psi_{s,N} = 0.7 + 0.3 \cdot \frac{c}{1.5 \cdot h_{ef}} \leq 1$

, where:

c =

206 mm – minimum distance from the anchor to the edge

h_{ef} =

137 mm – depth of embedment

$\psi_{re,N}$ = 1.00 – parameter accounting for the shell spalling:

$\psi_{re,N} = 0.5 + \frac{h_{emb}}{200} \leq 1$

, where:

h_{emb} =

350 mm – anchor length embedded in concrete

$\psi_{ec,N}$ = 0.67 – modification factor for anchor groups loaded eccentrically in tension:

$\psi_{ec,N} = \psi_{ecx,N} \cdot \psi_{ecy,N}$

, where:

$\psi_{ecx,N} = \frac{1}{1+\frac{2 \cdot e_{x,N}}{3 \cdot h_{ef}}}$ =

0.77 – modification factor that depends on eccentricity in x-direction

$e_{x,N}$ =

62 mm – tension load eccentricity in x-direction

$\psi_{ecy,N} = \frac{1}{1+\frac{2 \cdot e_{y,N}}{3 \cdot h_{ef}}}$ =

0.88 – modification factor that depends on eccentricity in y-direction

$e_{y,N}$ =

29 mm – tension load eccentricity in y-direction

h_{ef} =

137 mm – depth of embedment

$\psi_{M,N}$ = 1.48 – parameter accounting for the effect of a compression force between the fixture and concrete; this parameter is equal to 1 if c < 1.5h_{ef} or the ratio of the compressive force (including the compression due to bending) to the sum of tensile forces in anchors is smaller than 0.8

$\psi_{M,N} = 2 - \frac{2 \cdot z}{3 \cdot h_{ef}} \geq 1$

, where:

z =

106 mm – internal lever arm

h_{ef} =

137 mm – depth of embedment

02 TOWERFIELDS WESTERHAM ROAD
BROMLEY, BR2 6HF
Email: info@Pearlepp.co.uk
Website: www. pearlepp.co.uk
Tel no. 02035763199

γ_{Mc} = 1.80 – safety factor for concrete

Shear resistance (EN1992-4 - Cl.7.2.2.3.1)

$V_{Rd,s} = \frac{V_{Rk,s}}{\gamma_{Ms}} =$ 78.4 kN ≥ $V_{Ed} =$ 0.0 kN

$V_{Rk,s} = k_7 \cdot V^0_{Rk,s} =$ 98.0 kN

Where:

k_7 = 1.00 – coefficient for anchor steel ductility

$$k_7 = \begin{cases} 0.8, & A < 0.08 \\ 1.0, & A \geq 0.08 \end{cases}$$

, where:
A =
0.12 – bolt grade elongation at rupture

$V^0_{Rk,s}$ = 98.0 kN – the characteristic shear strength

$V^0_{Rk,s} = k_6 \cdot A_s \cdot f_{uk}$

, where:
k_6 =
0.50 – coefficient for anchor resistance in shear
A_s =
245 mm^2 – tensile stress area
f_{uk} =
800.0 MPa – specified ultimate strength of anchor steel

γ_{Ms} = 1.25 – safety factor for steel

Concrete pryout resistance (EN1992-4 - Cl. 7.2.2.4)
The check is performed for group of anchors on common base plate

$V_{Rd,cp} = \frac{V_{Rk,cp}}{\gamma_{Mc}} =$ 174.8 kN ≥ $V_{Ed,g} =$ 0.0 kN

$V_{Rk,cp} = k_8 \cdot N_{Rk,c} =$ 262.3 kN

Where:

k_8 = 2.00 – factor taking into account fastener embedment depth

$N_{Rk,c}$ = 131.1 kN – characteristic concrete cone strength for a single fastener or fastener in a group

γ_{Mc} = 1.50 – safety factor for concrete

Interaction of tensile and shear forces in steel (EN 1992-4 - Table 7.3)

$\left(\frac{N_{Ed}}{N_{Rd,s}}\right)^2 + \left(\frac{V_{Ed}}{V_{Rd,s}}\right)^2 =$ 0.00 ≤ 1.0

Where:

N_{Ed} = 1.5 kN – design tension force

$N_{Rd,s}$ = 111.1 kN – fastener tensile strength

V_{Ed} = 0.0 kN – design shear force

$V_{Rd,s}$ = 78.4 kN – fastener shear strength

Interaction of tensile and shear forces in concrete (EN 1992-4 - Table 7.3)

$(\frac{N_{Ed}}{N_{Rd,i}})^{1.5} + (\frac{V_{Ed}}{V_{Rd,i}})^{1.5} =$ 0.01 ≤ 1.0

Where:

$\frac{N_{Ed}}{N_{Rd,i}}$ – the largest utilization value for tension failure modes

$\frac{V_{Ed}}{V_{Rd,i}}$ – the largest utilization value for shear failure modes

$\frac{N_{Ed}}{N_{Rd,c}}$ = 4% – concrete breakout failure of anchor in tension

$\frac{N_{Ed}}{N_{Rd,p}}$ = 0% – concrete pullout failure

$\frac{N_{Ed}}{N_{Rd,cb}}$ = 0% – concrete blowout failure

$\frac{V_{Ed}}{V_{Rd,c}}$ = 0% – concrete edge failure

$\frac{V_{Ed}}{V_{Rd,cp}}$ = 0% – concrete pryout failure

Welds (Plastic redistribution)

Item	Edge	Throat th. [mm]	Length [mm]	Loads	$\sigma_{w,Ed}$ [MPa]	ε_{Pl} [%]	$\sigma_{\perp}$ [MPa]	$\tau_{\parallel}$ [MPa]	$\tau_{\perp}$ [MPa]	Ut [%]	Ut_c [%]	Status
BP1	COL	◢8.5	263	LE1	165.8	0.0	-86.0	50.6	64.3	41.0	23.6	OK

Design data

	β_w [-]	$\sigma_{w,Rd}$ [MPa]	0.9 σ [MPa]
S 275	0.85	404.7	309.6

Detailed result for BP1 COL

Weld resistance check (EN 1993-1-8 4.5.3.2)

$\sigma_{w,Rd} = f_u/(\beta_w \gamma_{M2}) =$ 404.7 MPa ≥ $\sigma_{w,Ed} = [\sigma_{\perp}^2 + 3(\tau_{\perp}^2 + \tau_{\parallel}^2)]^{0.5} =$ 165.8 MPa

$\sigma_{\perp,Rd} = 0.9 f_u / \gamma_{M2} =$ 309.6 MPa ≥ $|\sigma_\perp| =$ 86.0 MPa

where:

$f_u =$ 430.0 MPa – Ultimate strength

$\beta_w =$ 0.85 – appropriate correlation factor taken from Table 4.1

$\gamma_{M2} =$ 1.25 – Safety factor

Stress utilization

$U_t = \max(\frac{\sigma_{w,Ed}}{\sigma_{w,Rd}}; \frac{|\sigma_\perp|}{\sigma_{\perp,Rd}}) =$ 41.0 %

Concrete block

Item	Loads	c [mm]	A_{eff} [mm^2]	σ [MPa]	k_j [-]	F_{jd} [MPa]	Ut [%]	Status
CB 1	LE1	36	20490	7.3	3.00	33.5	21.7	OK

Detailed result for CB 1

Concrete block compressive resistance check (EN 1993-1-8 6.2.5)

$\sigma = \frac{N}{A_{eff}} =$ 7.3 MPa

$F_{jd} = \alpha_{cc} \beta_j k_j f_{ck} / \gamma_c =$ 33.5 MPa

where:

$N =$ 148.9 kN – Design normal force

$A_{eff} =$ 20490 mm^2 – Effective area, on which the column force N is distributed

$\alpha_{cc} =$ 1.00 – Long-term effects on Fcd

$\beta_j =$ 0.67 – Joint coefficient βj

$k_j =$ 3.00 – Concentration factor

$f_{ck} =$ 25.0 MPa – Characteristic compressive concrete strength

$\gamma_c =$ 1.50 – Safety factor

Stress utilization

$U_t = \frac{\sigma}{F_{jd}} =$ 21.7 %

Shear in contact plane

Name	Loads	V_y [kN]	V_z [kN]	$V_{Rd,y}$ [kN]	$V_{Rd,z}$ [kN]	$V_{c,Rd}$ [kN]	Ut [%]	Status

PEPP PEARL ENGINEERS, PLANNERS & PROJECT MANAGERS 02 TOWERFIELDS WESTERHAM ROAD BROMLEY, BR2 6HF Email: info@Pearlepp.co.uk Website: www. pearlepp.co.uk Tel no. 02035763199	**Project:** 68 GROVE PARK RD UK	**Sheet No./Rev.** 574
	Job Ref. 2024-06- / **Structural Engineer MM**	**Date 11/06/2024**

BP1	LE1	2.0	1.0	37.2	37.2	0.0	6.0	OK

Detailed result for BP1

Base plate shear resistance check (EN 1993-1-8 - 6.2.2)

$V_{Rd,y} = NC_f =$ 37.2 kN

$V_{Rd,z} = NC_f =$ 37.2 kN

where:

$N =$ 148.9 kN – Design normal force

$C_f = 0.25$ – Friction coefficient

Utilization in shear

$U_t = \max(\frac{\sqrt[2]{Vy^2+Vz^2}}{V_{Rd,y}}, \frac{\sqrt[2]{Vy^2+Vz^2}}{V_{Rd,z}}) =$ 6.0 %

Buckling

Loads	Shape	Factor [-]
LE1	1	59.43
	2	59.93
	3	67.48
	4	68.92
	5	77.71
	6	84.83

Bill of material

Manufacturing operations

Name	Plates [mm]	Shape	Nr.	Welds [mm]	Length [mm]	Bolts	Nr.
BP1	P22.0x299.9-299.9 (S 275)	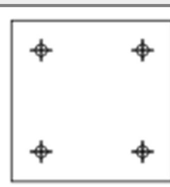	1	Fillet: a = 8.5	263.5	M20 8.8	4

Welds

Type	Material	Throat thickness [mm]	Leg size [mm]	Length [mm]
Fillet	S 275	8.5	12.0	263.5

Anchors

Name	Length [mm]	Drill length [mm]	Count
M20 8.8	372	350	4

Drawing

BP1

P22.0x300-300 (S 275)

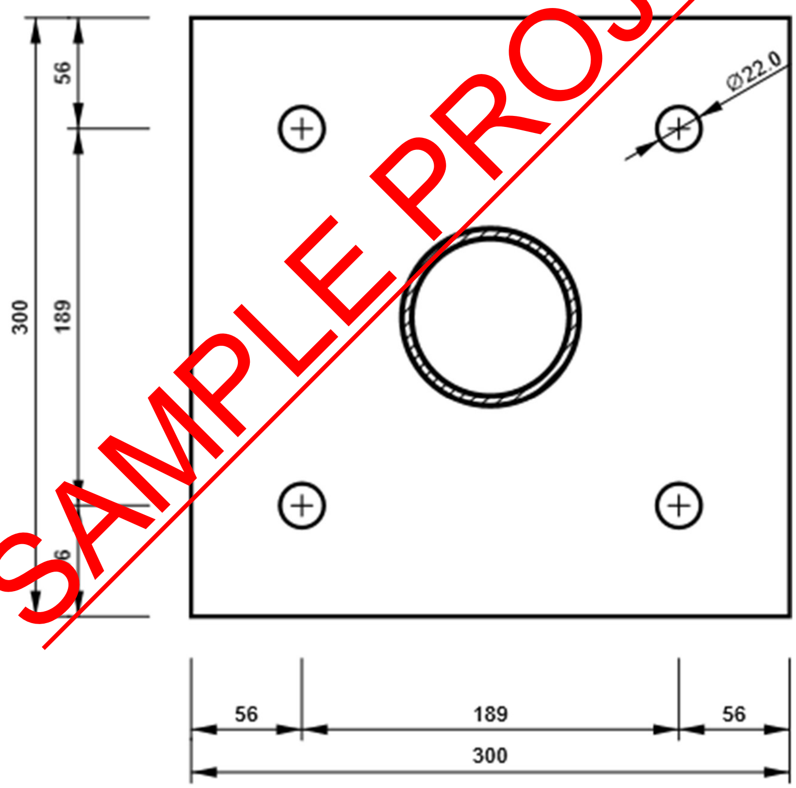

- **Splice Connection-1**

Project data

Project name
Project number
Author
Description — Splice Details UC 254x254x73
Date
Design code — EN

Material

Steel — S 275

Project item Splice 1

Design

Name
Description
Analysis — Stress, strain/ simplified loading

Beams and columns

Name	Cross-section	β – Direction [°]	γ - Pitch [°]	α - Rotation [°]	Offset ex [mm]	Offset ey [mm]	Offset ez [mm]	Forces in	X [mm]
B1	2 - UC 254 x 254 x 73	0.0	0.0	0.0	0	0	0	Bolts	152
B2	2 - UC 254 x 254 x 73	180.0	0.0	0.0	0	0	0	Bolts	152

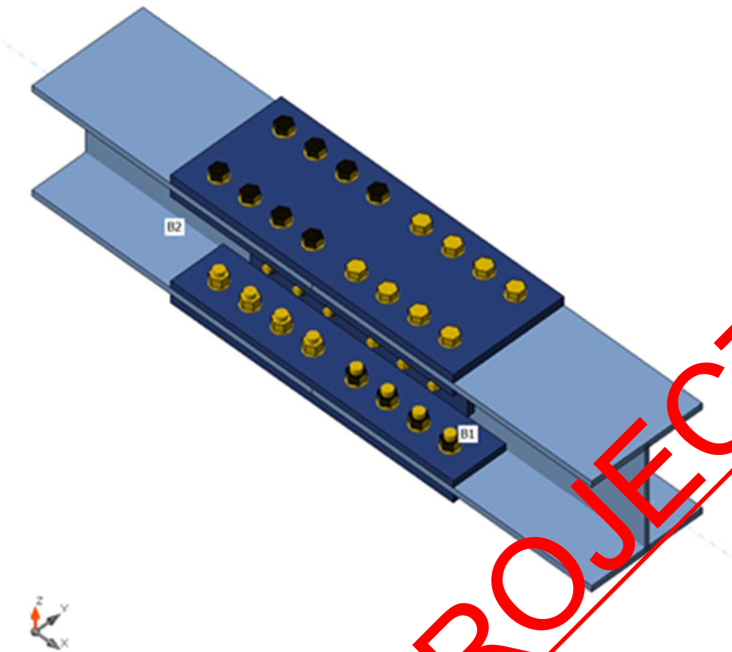

B2
B1

B2
B1
B2
B1

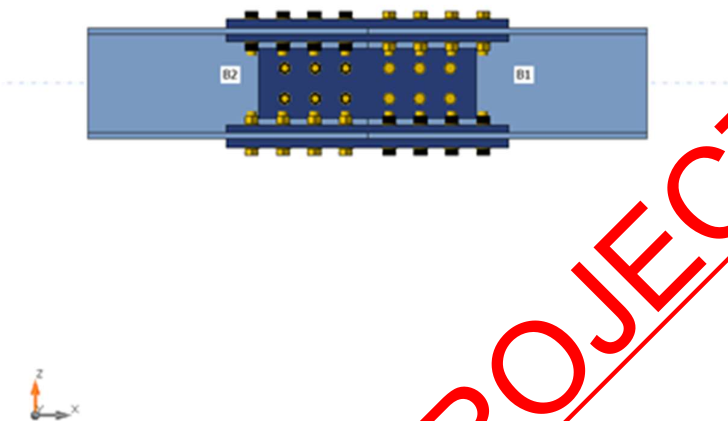

B2
B1

02 TOWERFIELDS WESTERHAM ROAD
BROMLEY, BR2 6HF
Email: info@Pearlepp.co.uk
Website: www. pearlepp.co.uk
Tel no. 02035763199

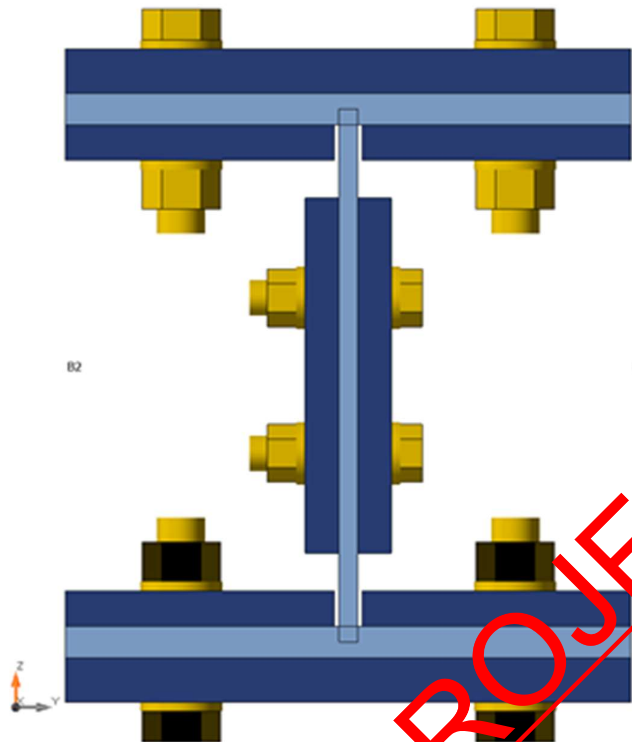

Cross-sections

Name	Material
2 - UC 254 x 254 x 73	S 275

Cross-sections

Name	Material	Drawing
2 - UC 254 x 254 x 73	S 275	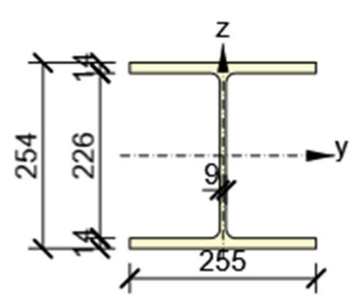

Bolts

Name	Bolt assembly	Diameter [mm]	fu [MPa]	Gross area [mm^2]
M22 8.8	M22 8.8	22	800.0	380
M16 8.8	M16 8.8	16	800.0	201

Load effects (equilibrium not required)

Name	Member	N [kN]	Vy [kN]	Vz [kN]	Mx [kNm]	My [kNm]	Mz [kNm]
LE1	B1	0.0	0.0	-100.0	0.0	130.0	0.0

Check

Summary

Name	Value	Status
Analysis	100.0%	OK
Plates	0.1 < 5.0%	OK
Bolts	41.6 < 100%	OK
Buckling	10.31	

Plates

Name	Thickness [mm]	Loads	σ_{Ed} [MPa]	ε_{Pl} [%]	σc_{Ed} [MPa]	Status
B1-bfl 1	14.2	LE1	219.8	0.0	4.1	OK
B1-tfl 1	14.2	LE1	250.0	0.0	4.8	OK
B1-w 1	8.[illegible]	LE1	153.4	0.0	3.4	OK
B2-bfl 1	14.2	LE1	255.0	0.0	35.5	OK
B2-tfl 1	14.2	LE1	275.2	0.1	63.5	OK
B2-w 1	8.6	LE1	221.9	0.0	63.5	OK
SPL1a	20.0	LE1	216.8	0.0	63.5	OK
SPL1b	16.0	LE1	210.1	0.0	4.8	OK
SPL1c	16.0	LE1	217.4	0.0	4.8	OK
SPL2a	20.0	LE1	185.0	0.0	4.0	OK
SPL2b	16.0	LE1	174.3	0.0	35.5	OK
SPL2c	16.0	LE1	174.1	0.0	35.5	OK
SPL3a	15.0	LE1	84.3	0.0	1.5	OK
SPL3b	15.0	LE1	85.2	0.0	1.5	OK

Design data

Material	f_y	ε_{lim}

	[MPa]	[%]
S 275	275.0	5.0

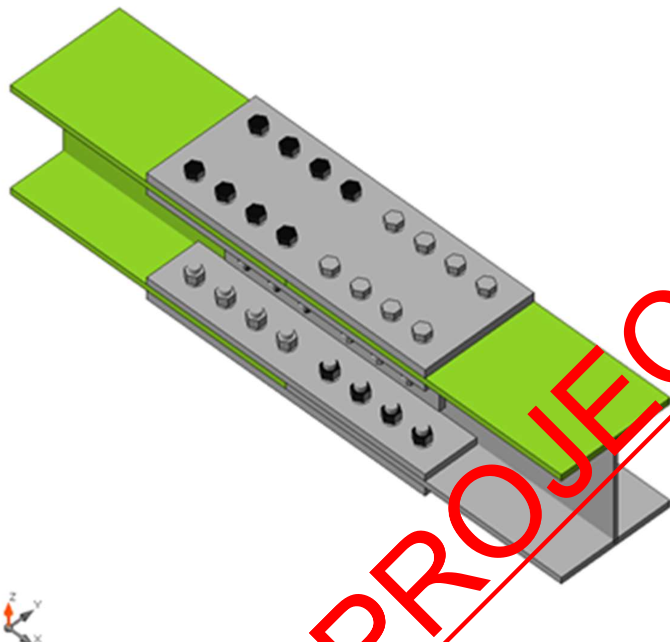

Overall check, LE1

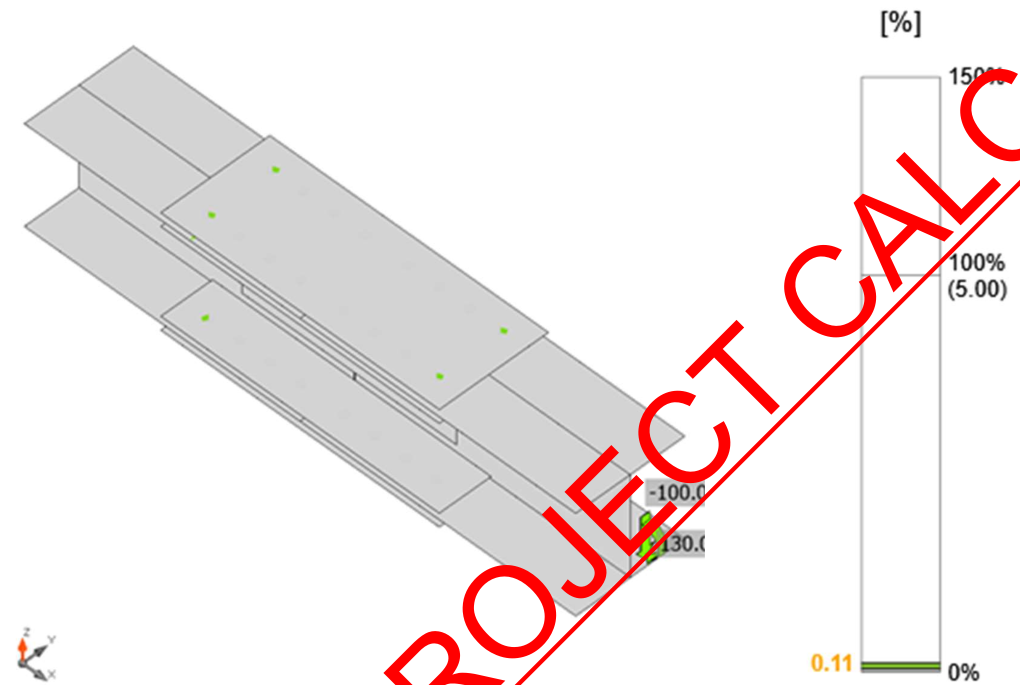

Strain check, LE1

PEPP PEARL ENGINEERS, PLANNERS & PROJECT MANAGERS 02 TOWERFIELDS WESTERHAM ROAD BROMLEY, BR2 6HF Email: info@Pearlepp.co.uk Website: www. pearlepp.co.uk Tel no. 02035763199	**Project:** 68 GROVE PARK RD UK **Job Ref. 2024-06-** **Structural Engineer** **MM**	**Sheet No./Rev.** 584 **Date** **11/06/2024**

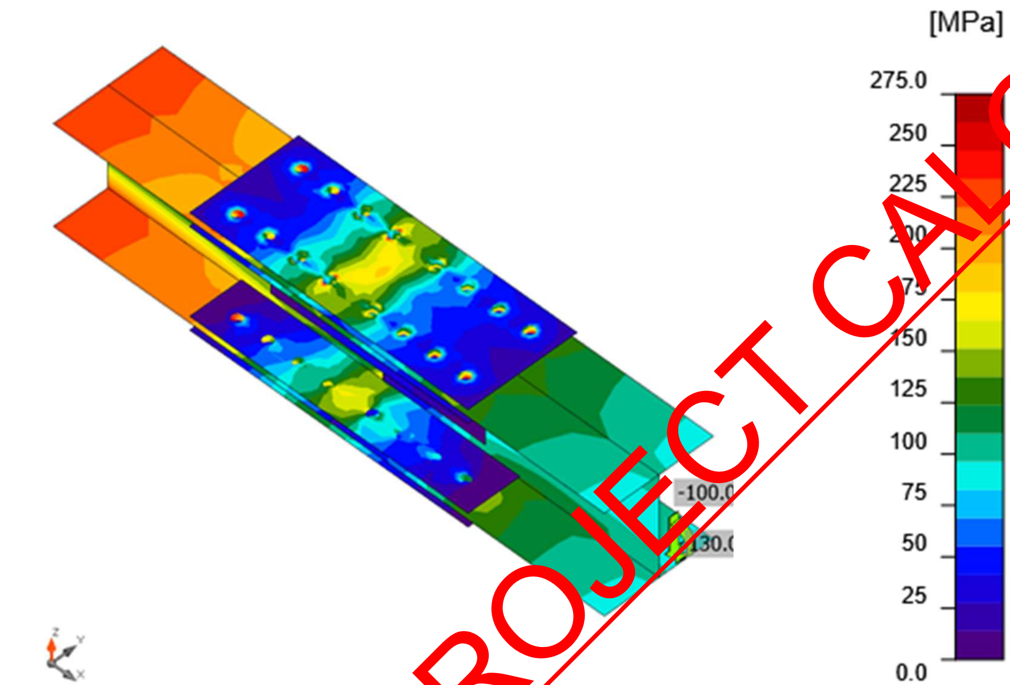

Equivalent stress, LE1

Bolts

	Name	Grade	Loads	$F_{t,Ed}$ [kN]	V [kN]	Ut_t [%]	$F_{b,Rd}$ [kN]	Ut_s [%]	Ut_{ts} [%]	Status
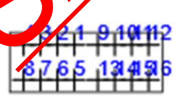	B1	M22 8.8 - 1	LE1	15.3	37.0	8.8	186.6	35.4	38.1	OK
	B2	M22 8.8 - 1	LE1	6.5	37.7	3.7	201.5	32.4	35.0	OK
	B3	M22 8.8 - 1	LE1	2.5	38.7	1.4	201.5	33.3	34.2	OK
	B4	M22 8.8 - 1	LE1	7.1	40.9	4.0	201.5	35.4	38.0	OK
	B5	M22 8.8 - 1	LE1	15.3	37.0	8.8	186.6	35.4	38.1	OK
	B6	M22 8.8 - 1	LE1	6.5	37.7	3.7	201.5	32.4	35.0	OK
	B7	M22 8.8 - 1	LE1	2.5	38.7	1.4	201.5	33.3	34.2	OK
	B8	M22 8.8 - 1	LE1	7.1	40.9	4.0	201.5	35.4	38.0	OK
	B9	M22 8.8 - 1	LE1	9.6	33.7	5.5	186.6	34.3	32.9	OK
	B10	M22 8.8 - 1	LE1	3.6	36.8	2.1	201.5	31.8	33.1	OK
	B11	M22 8.8 - 1	LE1	2.6	39.9	1.5	201.5	34.3	35.4	OK
	B12	M22 8.8 - 1	LE1	9.6	43.8	5.5	201.5	37.6	41.6	OK
	B13	M22 8.8 - 1	LE1	9.8	33.7	5.6	186.6	34.3	33.0	OK
	B14	M22 8.8 - 1	LE1	3.6	36.8	2.1	201.5	31.8	33.1	OK
	B15	M22 8.8 - 1	LE1	2.6	39.9	1.5	201.5	34.3	35.4	OK
	B16	M22 8.8 - 1	LE1	9.7	43.8	5.5	201.5	37.6	41.6	OK

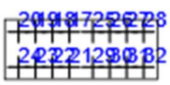	B17	M22 8.8 - 1	LE1	17.6	36.7	10.1	201.5	32.9	38.7	OK
	B18	M22 8.8 - 1	LE1	4.9	37.4	2.8	201.5	32.6	34.2	OK
	B19	M22 8.8 - 1	LE1	2.3	38.7	1.3	201.5	33.6	34.2	OK
	B20	M22 8.8 - 1	LE1	1.8	41.4	1.0	268.7	35.6	36.4	OK
	B21	M22 8.8 - 1	LE1	17.6	36.7	10.1	201.5	32.9	38.7	OK
	B22	M22 8.8 - 1	LE1	4.9	37.4	2.8	201.5	32.6	34.2	OK
	B23	M22 8.8 - 1	LE1	2.3	38.7	1.3	201.5	33.6	34.2	OK
	B24	M22 8.8 - 1	LE1	1.8	41.4	1.0	268.7	35.6	36.3	OK
	B25	M22 8.8 - 1	LE1	16.4	33.2	9.4	201.5	31.5	35.2	OK
	B26	M22 8.8 - 1	LE1	3.6	36.3	2.1	201.5	31.9	32.7	OK
	B27	M22 8.8 - 1	LE1	2.4	39.9	1.4	201.5	34.3	35.3	OK
	B28	M22 8.8 - 1	LE1	2.1	44.8	1.2	268.7	38.5	39.4	OK
	B29	M22 8.8 - 1	LE1	16.5	33.2	9.4	201.5	31.5	35.3	OK
	B30	M22 8.8 - 1	LE1	3.7	36.3	2.1	201.5	31.9	32.7	OK
	B31	M22 8.8 - 1	LE1	2.4	40.0	1.4	201.5	34.3	35.3	OK
	B32	M22 8.8 - 1	LE1	2.1	44.8	1.2	268.7	38.5	39.4	OK
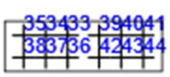	B33	M16 8.8 - 2	LE1	0.4	4.1	0.4	114.4	7.2	7.1	OK
	B34	M16 8.8 - 2	LE1	0.1	2.1	0.1	118.3	5.2	5.2	OK
	B35	M16 8.8 - 2	LE1	0.3	7.6	0.4	118.3	12.8	12.8	OK
	B36	M16 8.8 - 2	LE1	0.2	3.5	0.2	118.3	5.9	5.9	OK
	B37	M16 8.8 - 2	LE1	0.4	2.5	0.4	118.3	4.3	4.5	OK
	B38	M16 8.8 - 2	LE1	0.9	7.4	1.0	118.3	12.4	12.9	OK
	B39	M16 8.8 - 2	LE1	1.4	15.0	1.5	118.3	25.4	26.0	OK
	B40	M16 8.8 - 2	LE1	0.6	7.8	0.6	118.3	13.2	13.4	OK
	B41	M16 8.8 - 2	LE1	0.7	12.2	0.8	118.3	20.7	20.8	OK
	B42	M16 8.8 - 2	LE1	0.7	15.0	0.7	118.3	25.3	25.3	OK
	B43	M16 8.8 - 2	LE1	0.3	7.1	0.3	118.3	11.9	11.9	OK
	B44	M16 8.8 - 2	LE1	0.9	11.4	1.0	118.3	19.2	19.5	OK

Design data

Name	$F_{t,Rd}$ [kN]	$B_{p,Rd}$ [kN]	$F_{v,Rd}$ [kN]
M22 8.8 - 1	174.5	357.9	116.4
M16 8.8 - 2	90.4	243.2	60.3

Detailed result for B16

Tension resistance check (EN 1993-1-8 tab 3.4)

$$F_{t,Rd} = \frac{k_2 f_{ub} A_s}{\gamma_{M2}} = \quad 174.5 \text{ kN} \geq F_t = \quad 9.7 \text{ kN}$$

where:

k_2 = 0.90 – Factor

f_{ub} = 800.0 MPa – Ultimate tensile strength of the bolt

A_s = 303 mm^2 – Tensile stress area of the bolt

γ_{M2} = 1.25 – Safety factor

Punching resistance check (EN 1993-1-8 tab 3.4)

$$B_{p,Rd} = \frac{0.6\pi d_m t_p f_u}{\gamma_{M2}} = 357.9 \text{ kN} \geq F_t = 9.7 \text{ kN}$$

where:

d_m = 35 mm – The mean of the across points and across flats dimensions of the bolt head or the nut, whichever is smaller

t_p = 16 mm – Thickness

f_u = 430.0 MPa – Ultimate strength

γ_{M2} = 1.25 – Safety factor

Shear resistance check (EN 1993-1-8 tab 3.4)

$$F_{v,Rd} = \frac{\beta_p \alpha_v f_{ub} A}{\gamma_{M2}} = 116.4 \text{ kN} \geq V = 43.8 \text{ kN}$$

where:

β_p = 1.00 – Reducing factor

α_v = 0.60 – Reducing factor

f_{ub} = 800.0 MPa – Ultimate tensile strength of the bolt

A = 303 mm^2 – Tensile stress area of the bolt

γ_{M2} = 1.25 – Safety factor

Bearing resistance check (EN 1993-1-8 tab 3.4)

$$F_{b,Rd} = \frac{k_1 \alpha_b f_u d t}{\gamma_{M2}} = 201.5 \text{ kN} \geq V = 74.1 \text{ kN}$$

where:

$k_1 = \min(2.8\frac{e_2}{d_0} - 1.7, 1.4\frac{p_2}{d_0} - 1.7, 2.5) =$ 2.50 – Factor for edge distance and bolt spacing perpendicular to the direction of load transfer

$\alpha_b = \min(\frac{e_1}{3d_0}, \frac{p_1}{3d_0} - \frac{1}{4}, \frac{f_{ub}}{f_u}, 1) =$ 0.75 – Factor for end distance and bolt spacing in direction of load transfer

e_2 = 52 mm – Distance to the plate edge perpendicular to the shear force

p_2 = 150 mm – Distance between bolts perpendicular to the shear force

d_0 = 24 mm – Bolt hole diameter

e_1 = 266 mm – Distance to the plate edge in the direction of the shear force

p_1 = 72 mm – Distance between bolts in the direction of the shear force

f_{ub} = 800.0 MPa – Ultimate tensile strength of the bolt

f_u = 430.0 MPa – Ultimate strength

d = 22 mm – Nominal diameter of the fastener

PEPP
PEARL ENGINEERS, PLANNERS & PROJECT MANAGERS
02 TOWERFIELDS WESTERHAM ROAD
BROMLEY, BR2 6HF
Email: info@Pearlepp.co.uk
Website: www. pearlepp.co.uk
Tel no. 02035763199

$t =$ 14 mm – Thickness of the plate

$\gamma_{M2} =$ 1.25 – Safety factor

Interaction of tension and shear (EN 1993-1-8 tab 3.4)

$$U_{tts} = \frac{F_{v,Ed}}{F_{v,Rd}} + \frac{F_{t,Ed}}{1.4F_{t,Rd}} = \quad 41.6 \quad \%$$

Utilization in tension

$$U_{tt} = \frac{F_{t,Ed}}{\min(F_{t,Rd};B_{p,Rd})} = \quad 5.5 \quad \%$$

Utilization in shear

$$U_{ts} = \frac{V_{Ed}}{\min(F_{v,Rd};F_{b,Rd})} = \quad 37.6 \quad \%$$

Buckling

Loads	Shape	Factor [-]
LE1	1	10.31
	2	12.78
	3	17.23
	4	18.44
	5	19.80
	6	22.25

Bill of material

Manufacturing operations

Name	Plates [mm]	Shape	Nr.	Welds [mm]	Length [mm]	Bolts	Nr.
SPL1	P20.0x650.0-254.6 (S 275)	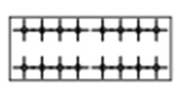	1			M22 8.8	16
	P16.0x650.0-121.0 (S 275)	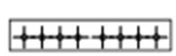	1				

PEPP PEARL ENGINEERS, PLANNERS & PROJECT MANAGERS 02 TOWERFIELDS WESTERHAM ROAD BROMLEY, BR2 6HF Email: info@Pearlepp.co.uk Website: www. pearlepp.co.uk Tel no. 02035763199	**Project:** 68 GROVE PARK RD UK		**Sheet No./Rev.** 588
	Job Ref. 2024-06-	**Structural Engineer** **MM**	**Date** **11/06/2024**

	P16.0x650.0-121.0 (S 275)	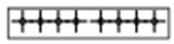	1				
SPL2	P20.0x650.0-254.6 (S 275)	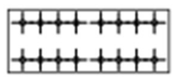	1			M22 8.8	16
	P16.0x650.0-121.0 (S 275)	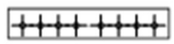	1				
	P16.0x650.0-121.0 (S 275)		1				
SPL3	P15.0x500.0-159.9 (S 275)	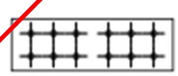	1			M16 8.8	12
	P15.0x500.0-159.9 (S 275)	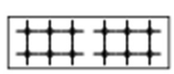	1				

Bolts

Name	Grip length [mm]	Count
M22 8.8	50	32
M16 8.8	39	12

Drawing

SPL1 - SPL1a

P20.0x255-650 (S 275)

SPL1 - SPL1b

P16.0x121-650 (S 275)

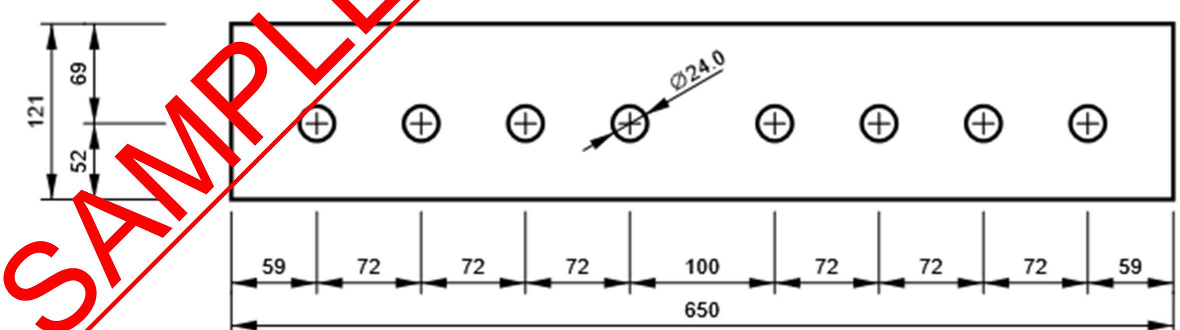

SPL1 - SPL1c

P16.0x121-650 (S 275)

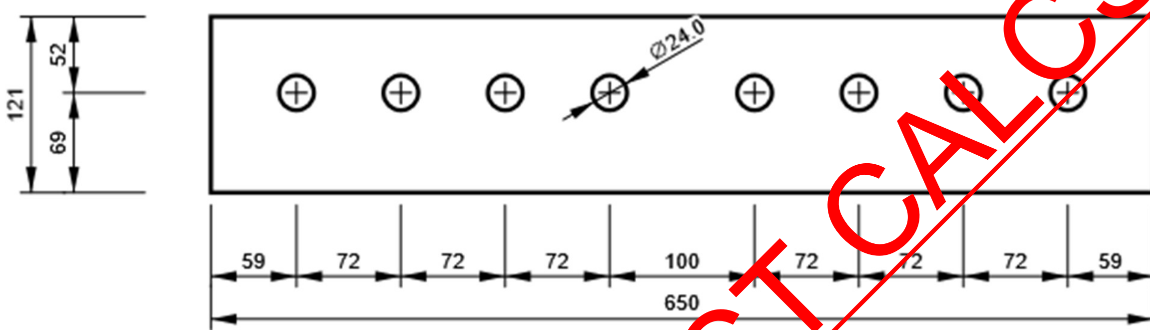

SPL2 - SPL2a

P20.0x255-650 (S 275)

PEPP PEARL ENGINEERS, PLANNERS & PROJECT MANAGERS 02 TOWERFIELDS WESTERHAM ROAD BROMLEY, BR2 6HF Email: info@Pearlepp.co.uk Website: www. pearlepp.co.uk Tel no. 02035763199	**Project:** 68 GROVE PARK RD UK		**Sheet No./Rev.** 591
	Job Ref. 2024-06-	**Structural Engineer** **MM**	**Date** **11/06/2024**

SPL2 - SPL2b

P16.0x121-650 (S 275)

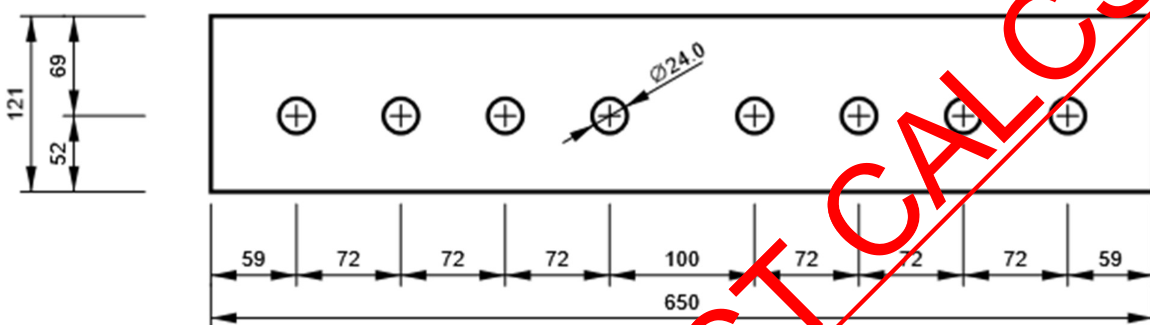

SPL2 - SPL2c

P16.0x121-650 (S 275)

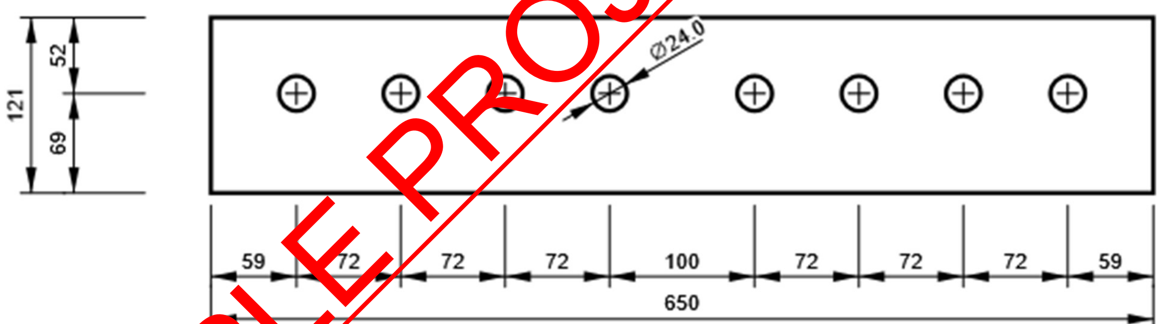

SPL3 - SPL3a

P15.0x160-500 (S 275)

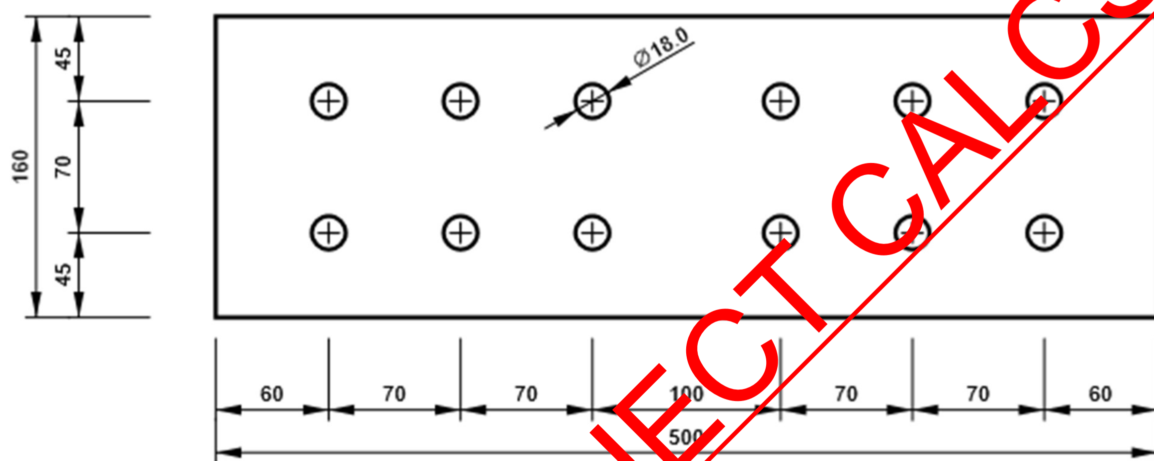

SPL3 - SPL3b

P15.0x160-500 (S 275)

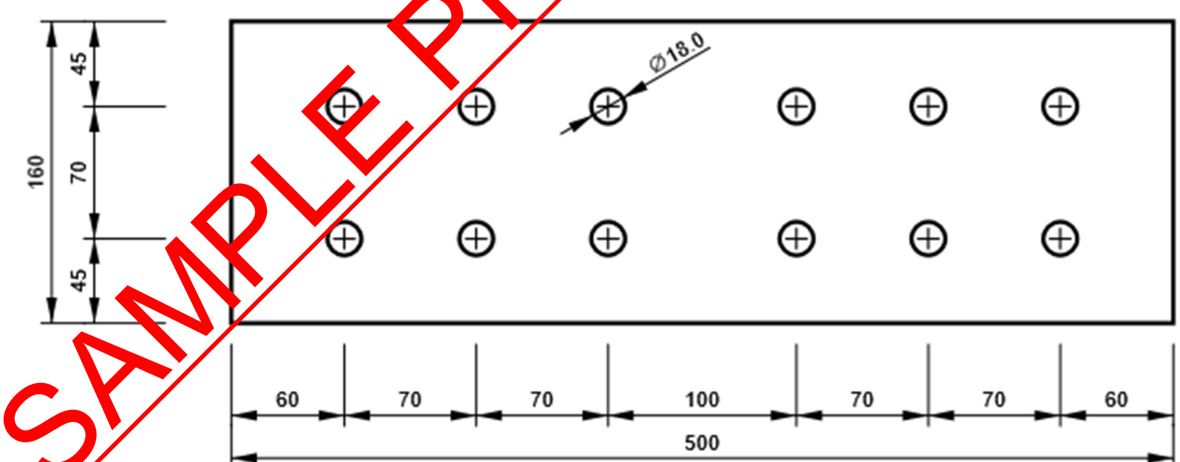

B1, UC 254 x 254 x 73 - Bottom flange 1:

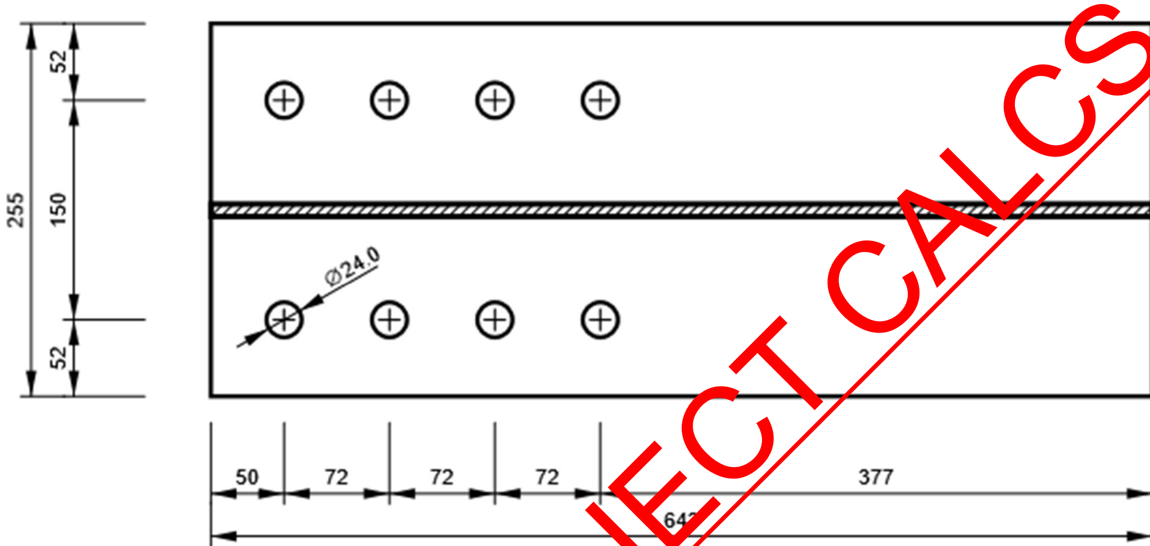

B1, UC 254 x 254 x 73 - Top flange 1:

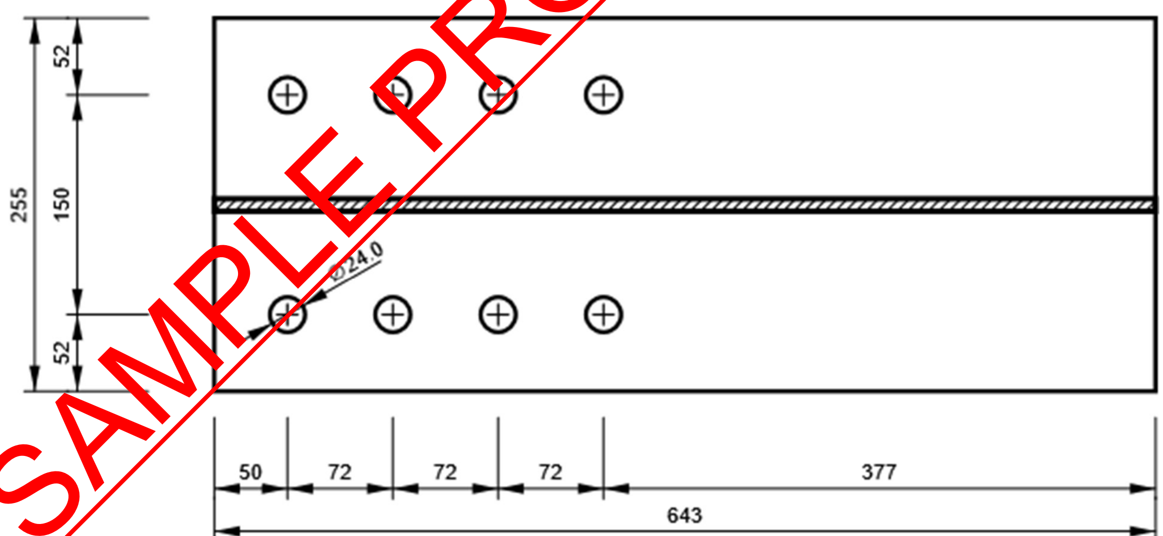

B1, UC 254 x 254 x 73 - Web 1:

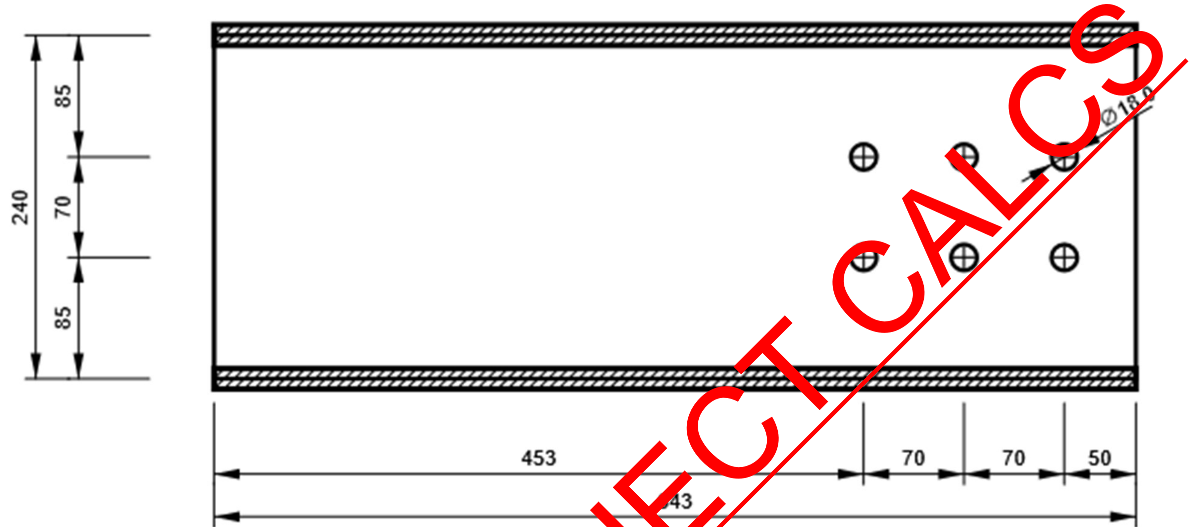

B2, UC 254 x 254 x 73 - Bottom flange 1:

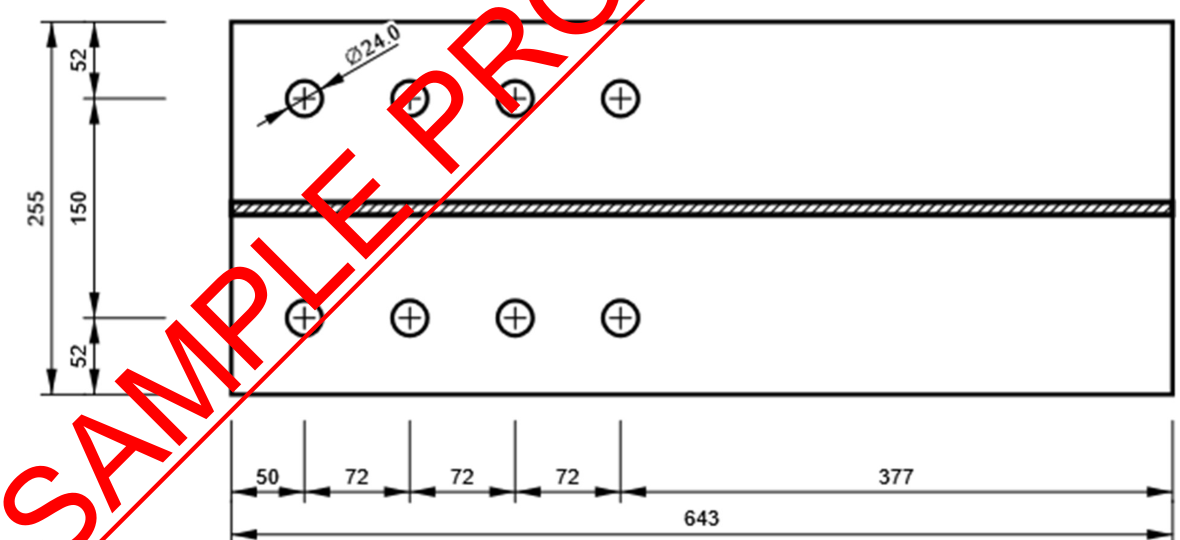

B2, UC 254 x 254 x 73 - Top flange 1:

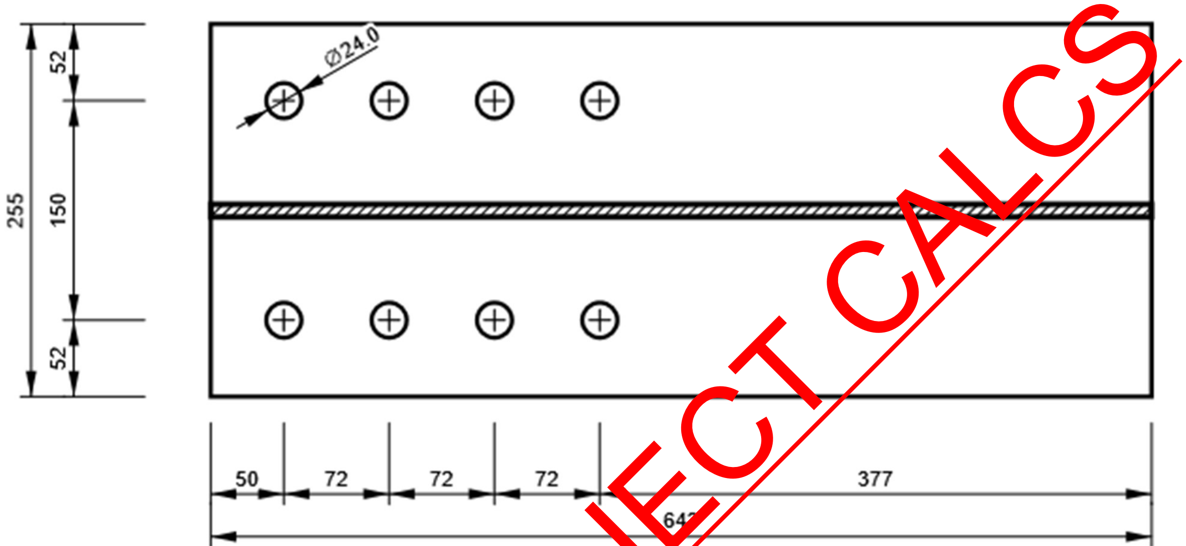

B2, UC 254 x 254 x 73 - Web 1:

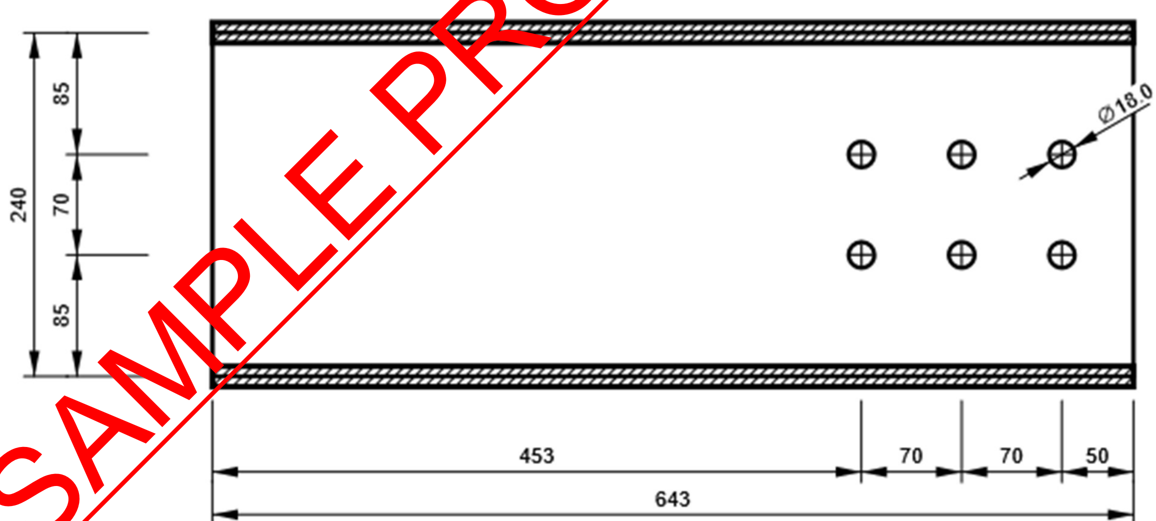

- **Splice Connection-2**

Project data

Project name	
Project number	
Author	
Description	Splice Details UC 254x254x89
Date	
Design code	EN

Material

Steel	S 275,

Project item Splice Connection 2

Design

Name	
Description	
Analysis	Stress, strain/ simplified loading

Beams and columns

Name	Cross-section	β – Direction [°]	γ - Pitch [°]	α - Rotation [°]	Offset ex [mm]	Offset ey [mm]	Offset ez [mm]	Forces in	X [mm]
B1	2 - UC 254 x 254 x 89	0.0	0.0	0.0	0	0	0	Bolts	152
B2	2 - UC 254 x 254 x 89	180.0	0.0	0.0	0	0	0	Bolts	152

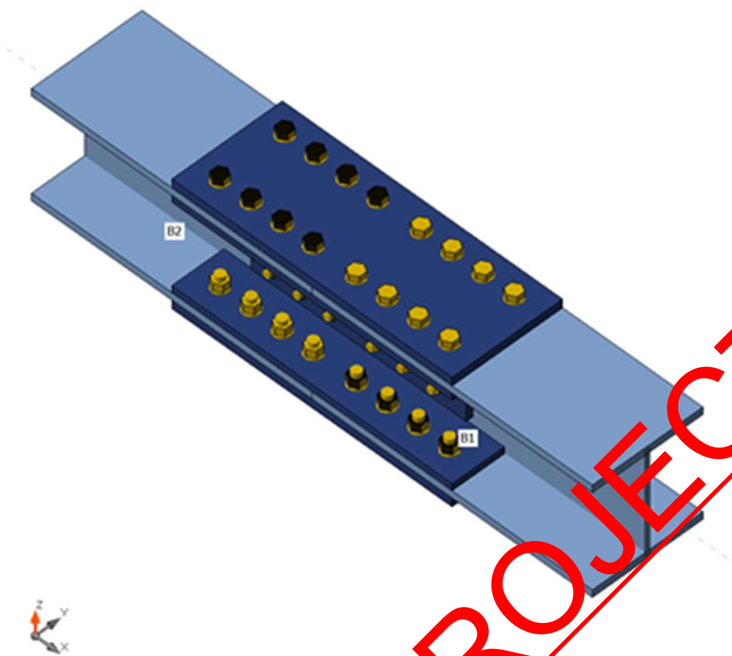

B2
B1

PEPP PEARL ENGINEERS, PLANNERS & PROJECT MANAGERS 02 TOWERFIELDS WESTERHAM ROAD BROMLEY, BR2 6HF Email: info@Pearlepp.co.uk Website: www. pearlepp.co.uk Tel no. 02035763199	**Project:** 68 GROVE PARK RD UK		**Sheet No./Rev.** 598
	Job Ref. 2024-06-	**Structural Engineer** **MM**	**Date** **11/06/2024**

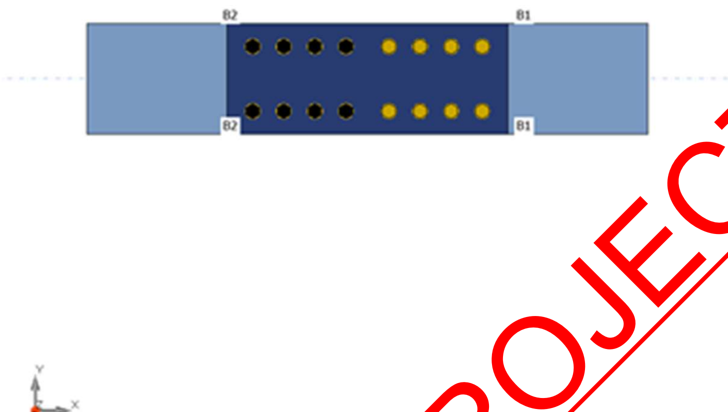

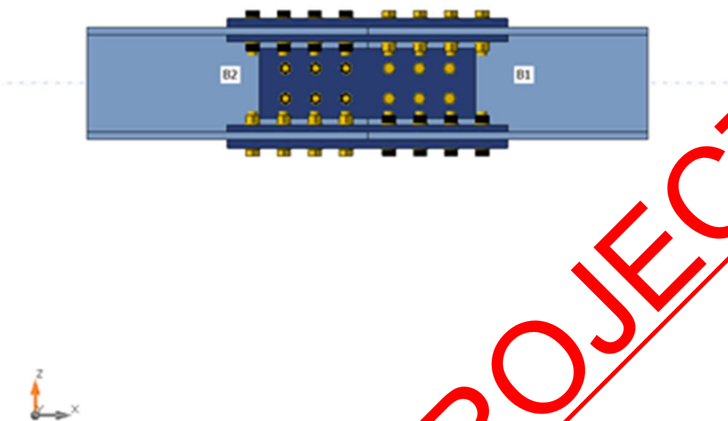

B2
B1

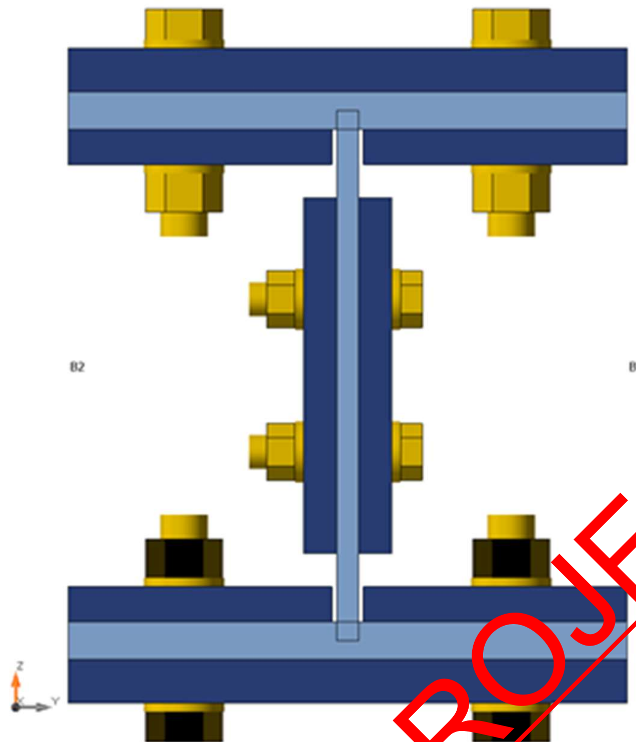

Cross-sections

Name	Material
2 - UC 254 x 254 x 89	S 275

Cross-sections

Name	Material	Drawing
2 - UC 254 x 254 x 89	S 275	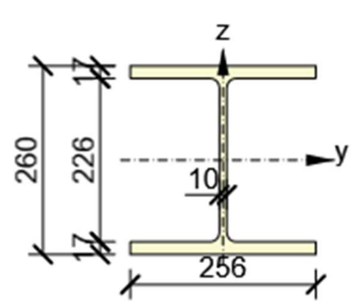

Bolts

Name	Bolt assembly	Diameter [mm]	fu [MPa]	Gross area [mm^2]
M22 8.8	M22 8.8	22	800.0	380
M16 8.8	M16 8.8	16	800.0	201

Load effects (equilibrium not required)

Name	Member	N [kN]	Vy [kN]	Vz [kN]	Mx [kNm]	My [kNm]	Mz [kNm]
LE1	B1	0.0	0.0	-100.0	0.0	130.0	0.0

Check

Summary

Name	Value	Status
Analysis	100.0%	OK
Plates	0.0 < 5.0%	OK
Bolts	41.1 < 100%	OK
Buckling	17.90	

Plates

Name	Thickness [mm]	Loads	σ_{Ed} [MPa]	ε_{Pl} [%]	σc_{Ed} [MPa]	Status
B1-bfl 1	17.3	LE1	176.2	0.0	4.2	OK
B1-tfl 1	17.3	LE1	216.4	0.0	5.6	OK
B1-w 1	10.3	LE1	124.6	0.0	2.8	OK
B2-bfl 1	17.3	LE1	206.3	0.0	32.0	OK
B2-tfl 1	17.3	LE1	264.4	0.0	61.2	OK
B2-w 1	10.3	LE1	222.3	0.0	61.2	OK
SPL1a	20.0	LE1	208.2	0.0	61.2	OK
SPL1b	16.0	LE1	194.5	0.0	5.6	OK
SPL1c	16.0	LE1	201.4	0.0	5.6	OK
SPL2a	20.0	LE1	179.9	0.0	3.5	OK
SPL2b	16.0	LE1	170.4	0.0	32.0	OK
SPL2c	16.0	LE1	170.2	0.0	32.0	OK
SPL3a	15.0	LE1	81.7	0.0	1.4	OK
SPL3b	15.0	LE1	81.7	0.0	1.5	OK

Design data

Material	f_y	ε_{lim}

	[MPa]	[%]
S 275	275.0	5.0

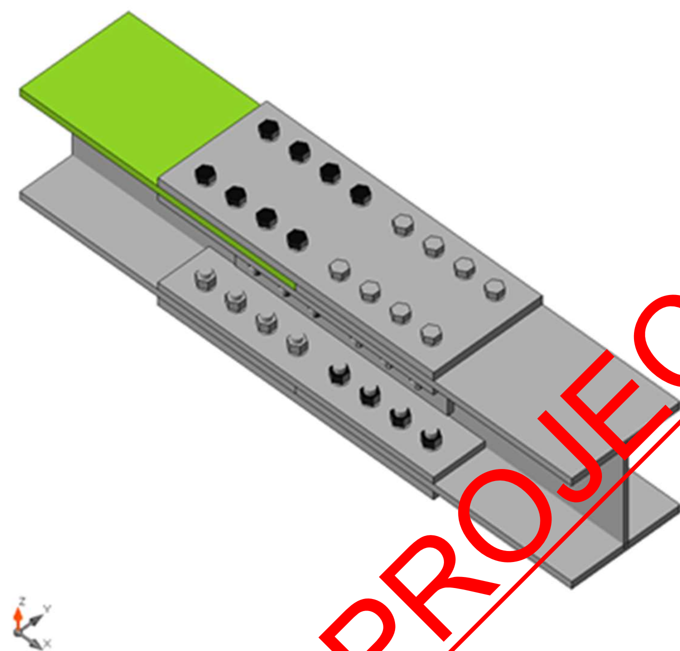

Overall check, LE1

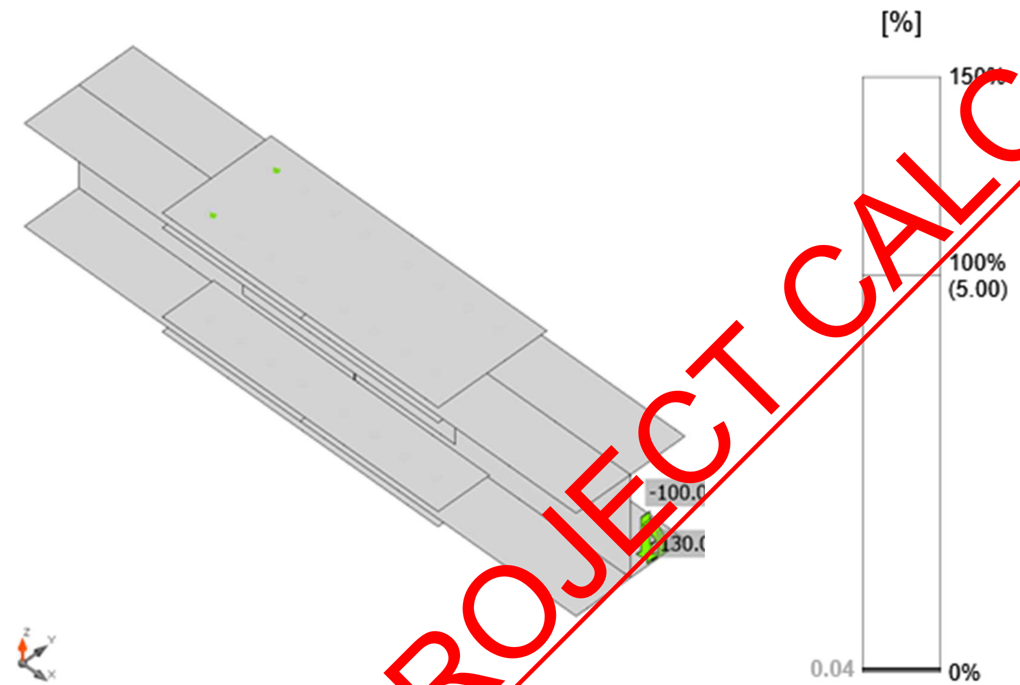

Strain check, LE1

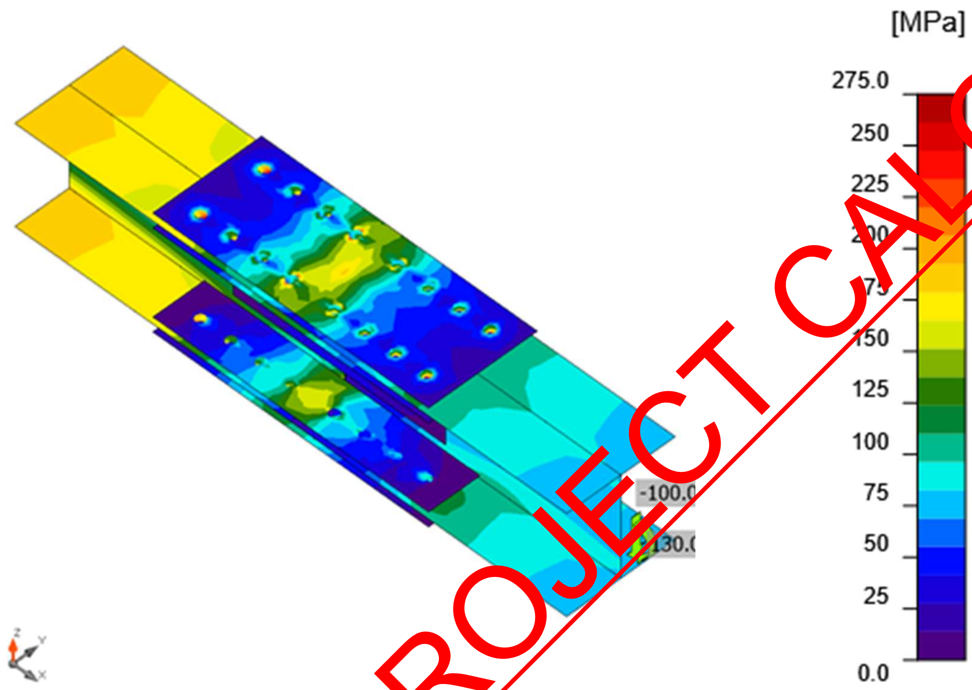

Equivalent stress, LE1

Bolts

	Name	Grade	Loads	$F_{t,Ed}$ [kN]	V [kN]	Ut_t [%]	$F_{b,Rd}$ [kN]	Ut_s [%]	Ut_{ts} [%]	Status
	B1	M22 8.8 - 1	LE1	15.3	37.6	8.8	227.3	32.3	38.6	OK
	B2	M22 8.8 - 1	LE1	6.1	38.0	3.5	245.5	32.7	35.1	OK
	B3	M22 8.8 - 1	LE1	1.9	38.7	1.1	245.5	33.2	34.0	OK
	B4	M22 8.8 - 1	LE1	7.3	40.5	4.2	245.5	34.8	37.8	OK
	B5	M22 8.8 - 1	LE1	15.5	37.7	8.9	227.3	32.4	38.7	OK
	B6	M22 8.8 - 1	LE1	6.1	38.0	3.5	245.5	32.7	35.2	OK
	B7	M22 8.8 - 1	LE1	1.9	38.7	1.1	245.5	33.2	34.0	OK
	B8	M22 8.8 - 1	LE1	7.3	40.5	4.2	245.5	34.8	37.8	OK
	B9	M22 8.8 - 1	LE1	8.9	34.4	5.1	227.3	29.6	33.2	OK
	B10	M22 8.8 - 1	LE1	3.2	37.2	1.8	245.5	32.0	33.3	OK
	B11	M22 8.8 - 1	LE1	2.0	39.9	1.2	245.5	34.3	35.1	OK
	B12	M22 8.8 - 1	LE1	9.4	43.4	5.4	245.5	37.3	41.1	OK
	B13	M22 8.8 - 1	LE1	9.2	34.4	5.3	227.3	29.6	33.3	OK
	B14	M22 8.8 - 1	LE1	3.2	37.2	1.8	245.5	32.0	33.3	OK
	B15	M22 8.8 - 1	LE1	2.0	39.9	1.2	245.5	34.3	35.1	OK
	B16	M22 8.8 - 1	LE1	9.4	43.4	5.4	245.5	37.3	41.1	OK

	B17	M22 8.8 - 1	LE1	18.0	37.3	10.3	245.5	32.1	39.5	OK
	B18	M22 8.8 - 1	LE1	4.5	37.9	2.6	245.5	32.5	34.4	OK
	B19	M22 8.8 - 1	LE1	2.2	38.8	1.2	245.5	33.3	34.2	OK
	B20	M22 8.8 - 1	LE1	1.8	41.2	1.0	327.3	35.4	36.1	OK
	B21	M22 8.8 - 1	LE1	18.0	37.3	10.3	245.5	32.1	39.5	OK
	B22	M22 8.8 - 1	LE1	4.5	37.9	2.6	245.5	32.6	34.4	OK
	B23	M22 8.8 - 1	LE1	2.1	38.8	1.2	245.5	33.3	34.2	OK
	B24	M22 8.8 - 1	LE1	1.8	41.2	1.0	327.3	35.4	36.1	OK
	B25	M22 8.8 - 1	LE1	16.3	34.0	9.4	245.5	29.2	35.9	OK
	B26	M22 8.8 - 1	LE1	3.2	36.9	1.9	245.5	31.7	33.1	OK
	B27	M22 8.8 - 1	LE1	2.3	40.1	1.3	245.5	34.4	35.4	OK
	B28	M22 8.8 - 1	LE1	2.0	44.3	1.1	327.3	38.1	38.9	OK
	B29	M22 8.8 - 1	LE1	16.4	34.0	9.4	245.5	29.2	35.9	OK
	B30	M22 8.8 - 1	LE1	3.3	36.9	1.9	245.5	31.7	33.1	OK
	B31	M22 8.8 - 1	LE1	2.3	40.1	1.3	245.5	34.4	35.4	OK
	B32	M22 8.8 - 1	LE1	2.0	44.3	1.1	327.3	38.1	38.9	OK
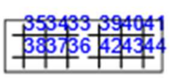	B33	M16 8.8 - 2	LE1	0.4	4.4	0.5	138.3	7.4	7.7	OK
	B34	M16 8.8 - 2	LE1	0.1	2.1	0.1	141.7	5.2	5.3	OK
	B35	M16 8.8 - 2	LE1	0.4	7.6	0.4	141.7	12.6	12.9	OK
	B36	M16 8.8 - 2	LE1	0.2	3.9	0.2	141.7	6.4	6.6	OK
	B37	M16 8.8 - 2	LE1	0.4	2.6	0.4	141.7	4.3	4.6	OK
	B38	M16 8.8 - 2	LE1	0.9	7.4	1.0	141.7	12.3	13.0	OK
	B39	M16 8.8 - 2	LE1	1.4	14.5	1.5	141.7	24.1	25.2	OK
	B40	M16 8.8 - 2	LE1	0.6	7.5	0.6	141.7	12.4	12.9	OK
	B41	M16 8.8 - 2	LE1	0.7	11.9	0.8	141.7	19.7	20.3	OK
	B42	M16 8.8 - 2	LE1	0.7	14.5	0.7	141.7	24.0	24.5	OK
	B43	M16 8.8 - 2	LE1	0.3	6.8	0.3	141.7	11.3	11.5	OK
	B44	M16 8.8 - 2	LE1	0.9	11.1	1.0	141.7	18.4	19.1	OK

Design data

Name	$F_{t,Rd}$ [kN]	$B_{p,Rd}$ [kN]	$F_{v,Rd}$ [kN]
M22 8.8 - 1	174.5	357.9	116.4
M16 8.8 - 2	90.4	243.2	60.3

Detailed result for B16

Tension resistance check (EN 1993-1-8 tab 3.4)

$$F_{t,Rd} = \frac{k_2 f_{ub} A_s}{\gamma_{M2}} = 174.5 \text{ kN} \geq F_t = 9.4 \text{ kN}$$

where:

$k_2 = 0.90$ – Factor

$f_{ub} = 800.0$ MPa – Ultimate tensile strength of the bolt

$A_s = 303$ mm^2 – Tensile stress area of the bolt

γ_{M2} = 1.25 – Safety factor

Punching resistance check (EN 1993-1-8 tab 3.4)

$B_{p,Rd} = \frac{0.6\pi d_m t_p f_u}{\gamma_{M2}} =$ 357.9 kN ≥ $F_t =$ 9.4 kN

where:

d_m = 35 mm – The mean of the across points and across flats dimensions of the bolt head or the nut, whichever is smaller

t_p = 16 mm – Thickness

f_u = 430.0 MPa – Ultimate strength

γ_{M2} = 1.25 – Safety factor

Shear resistance check (EN 1993-1-8 tab 3.4)

$F_{v,Rd} = \frac{\beta_p \alpha_v f_{ub} A}{\gamma_{M2}} =$ 116.4 kN ≥ $V =$ 43.4 kN

where:

β_p = 1.00 – Reducing factor

α_v = 0.60 – Reducing factor

f_{ub} = 800.0 MPa – Ultimate tensile strength of the bolt

A = 303 mm^2 – Tensile stress area of the bolt

γ_{M2} = 1.25 – Safety factor

Bearing resistance check (EN 1993-1-8 tab 3.4)

$F_{b,Rd} = \frac{k_1 \alpha_b f_u d t}{\gamma_{M2}} =$ 245.5 kN ≥ $V =$ 71.9 kN

where:

$k_1 = \min(2.8\frac{e_2}{d_0} - 1.7, 1.4\frac{p_2}{d_0} - 1.7, 2.5) =$ 2.50 – Factor for edge distance and bolt spacing perpendicular to the direction of load transfer

$\alpha_b = \min(\frac{e_1}{3d_0}, \frac{p_1}{3d_0} - \frac{1}{4}, \frac{f_{ub}}{f_u}, 1) =$ 0.75 – Factor for end distance and bolt spacing in direction of load transfer

e_2 = 53 mm – Distance to the plate edge perpendicular to the shear force

p_2 = 150 mm – Distance between bolts perpendicular to the shear force

d_0 = 24 mm – Bolt hole diameter

e_1 = 266 mm – Distance to the plate edge in the direction of the shear force

p_1 = 72 mm – Distance between bolts in the direction of the shear force

f_{ub} = 800.0 MPa – Ultimate tensile strength of the bolt

f_u = 430.0 MPa – Ultimate strength

d = 22 mm – Nominal diameter of the fastener

$t =$ 17 mm – Thickness of the plate

$\gamma_{M2} =$ 1.25 – Safety factor

Interaction of tension and shear (EN 1993-1-8 tab 3.4)

$$U_{tts} = \frac{F_{v,Ed}}{F_{v,Rd}} + \frac{F_{t,Ed}}{1.4F_{t,Rd}} = \quad 41.1 \quad \%$$

Utilization in tension

$$U_{tt} = \frac{F_{t,Ed}}{\min(F_{t,Rd};B_{p,Rd})} = \quad 5.4 \quad \%$$

Utilization in shear

$$U_{ts} = \frac{V_{Ed}}{\min(F_{v,Rd};F_{b,Rd})} = \quad 37.3 \quad \%$$

Buckling

Loads	Shape	Factor [-]
LE1	1	17.90
	2	21.38
	3	29.47
	4	31.00
	5	34.30
	6	35.89

Bill of material

Manufacturing operations

Name	Plates [mm]	Shape	Nr.	Welds [mm]	Length [mm]	Bolts	Nr.
SPL1	P20.0x650.0-256.3 (S 275)	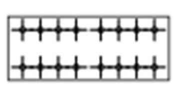	1			M22 8.8	16
	P16.0x650.0-121.0 (S 275)	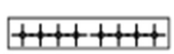	1				

	P16.0x650.0-121.0 (S 275)		1				
SPL2	P20.0x650.0-256.3 (S 275)		1			M22 8.8	16
	P16.0x650.0-121.0 (S 275)	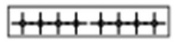	1				
	P16.0x650.0-121.0 (S 275)		1				
SPL3	P15.0x500.0-163.0 (S 275)	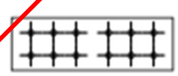	1			M16 8.8	12
	P15.0x500.0-163.0 (S 275)	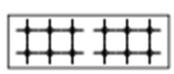	1				

Bolts

Name	Grip length [mm]	Count
M22 8.8	53	32
M16 8.8	40	12

PEPP 02 TOWERFIELDS WESTERHAM ROAD BROMLEY, BR2 6HF Email: info@Pearlepp.co.uk Website: www. pearlepp.co.uk Tel no. 02035763199	**Project:** 68 GROVE PARK RD UK		**Sheet No./Rev.** 609
	Job Ref. 2024-06-	**Structural Engineer** **MM**	**Date** **11/06/2024**

Drawing

SPL1 - SPL1a

P20.0x256-650 (S 275)

SPL1 - SPL1b

P16.0x121-650 (S 275)

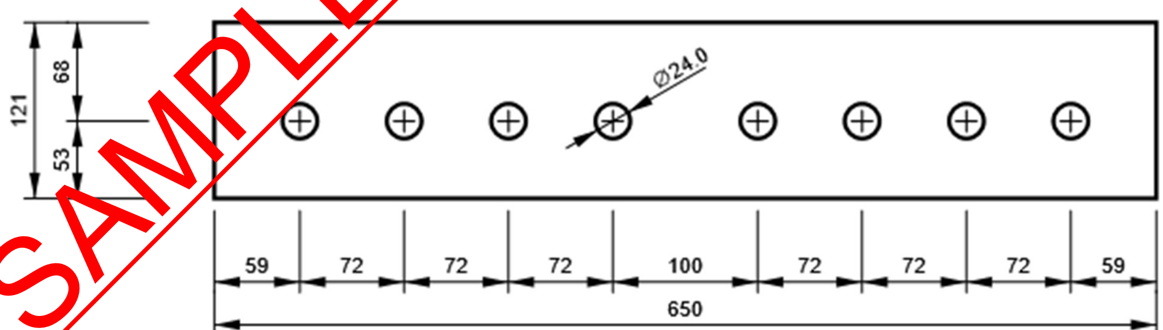

SPL1 - SPL1c

P16.0x121-650 (S 275)

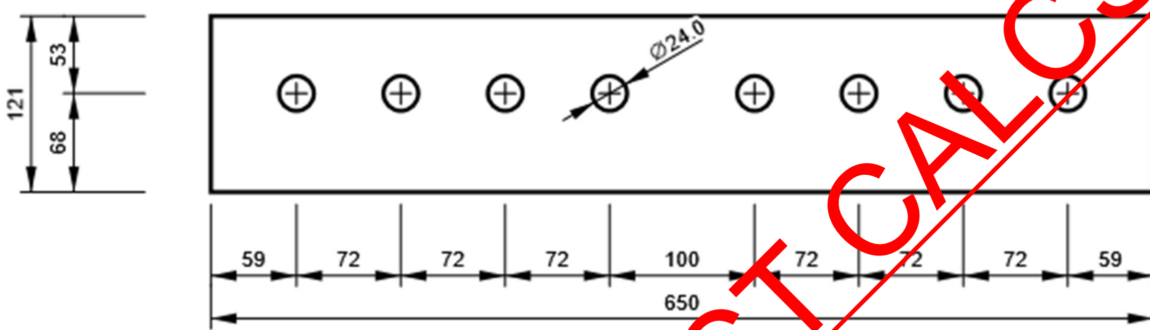

SPL2 - SPL2a

P20.0x256-650 (S 275)

SPL2 - SPL2b

P16.0x121-650 (S 275)

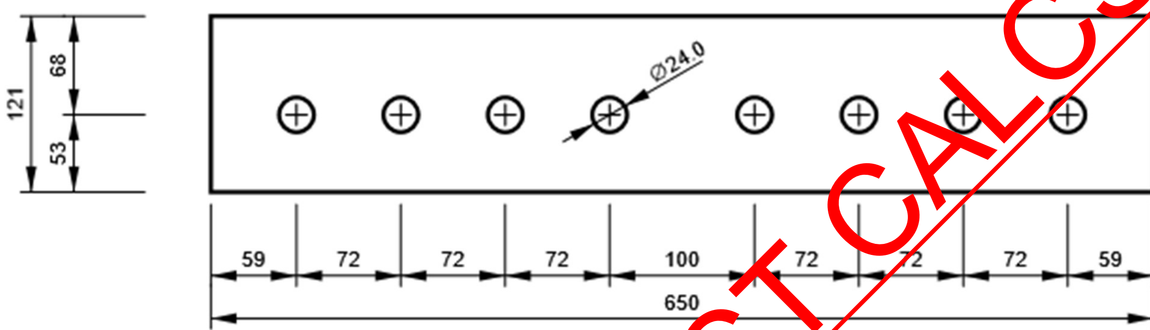

SPL2 - SPL2c

P16.0x121-650 (S 275)

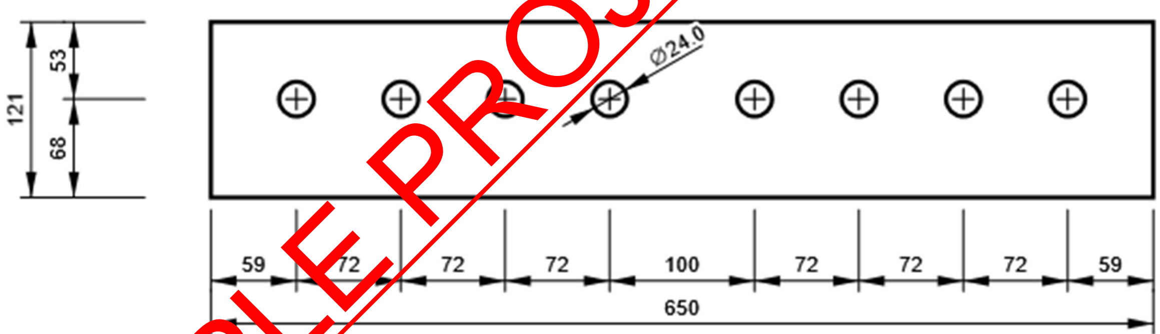

02 TOWERFIELDS WESTERHAM ROAD
BROMLEY, BR2 6HF
Email: info@Pearlepp.co.uk
Website: www. pearlepp.co.uk
Tel no. 02035763199

Project: 68 GROVE PARK RD UK			**Sheet No./Rev.** 612
Job Ref. 2024-06-		**Structural Engineer** **MM**	**Date** **11/06/2024**

SPL3 - SPL3a

P15.0x163-500 (S 275)

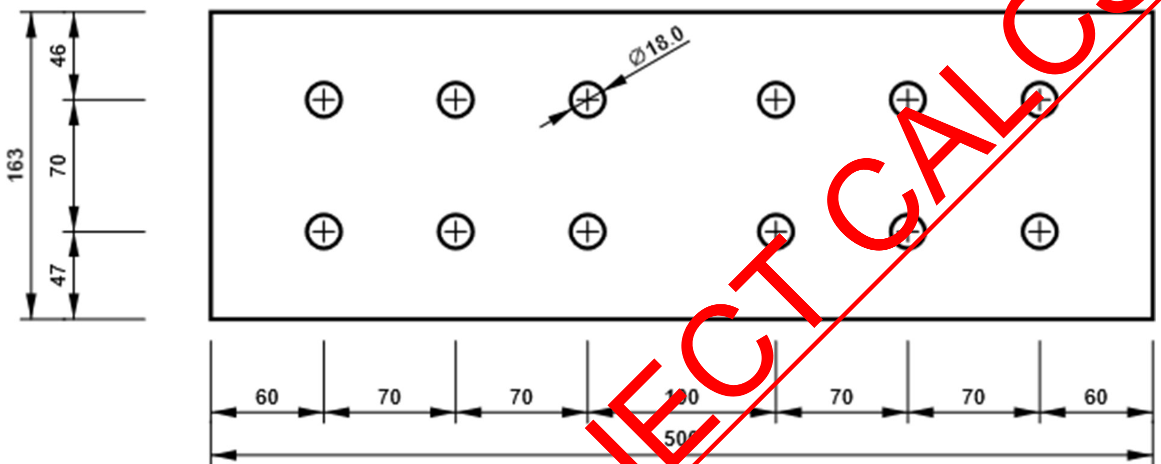

SPL3 - SPL3b

P15.0x163-500 (S 275)

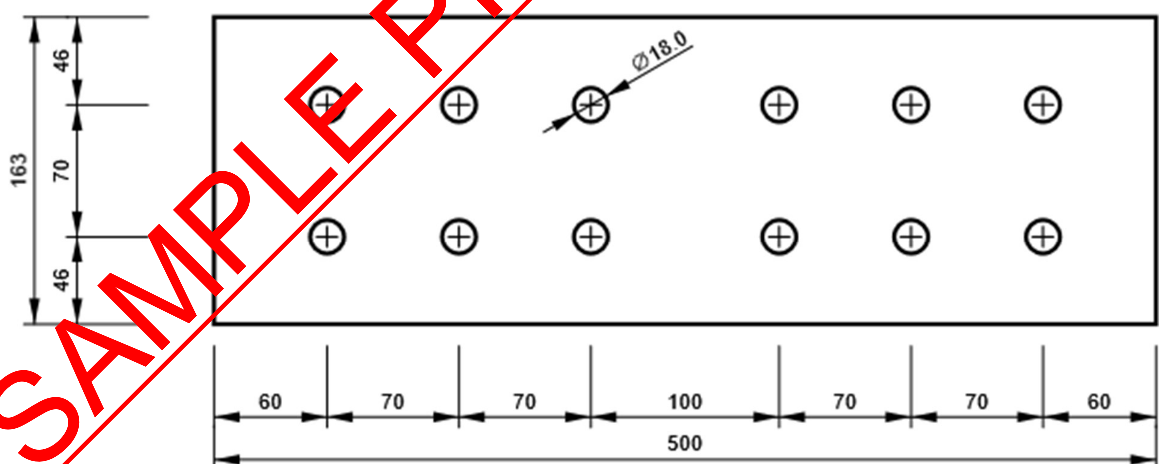

PEPP
PEARL ENGINEERS, PLANNERS & PROJECT MANAGERS
02 TOWERFIELDS WESTERHAM ROAD
BROMLEY, BR2 6HF
Email: info@Pearlepp.co.uk
Website: www. pearlepp.co.uk
Tel no. 02035763199

B1, UC 254 x 254 x 89 - Bottom flange 1:

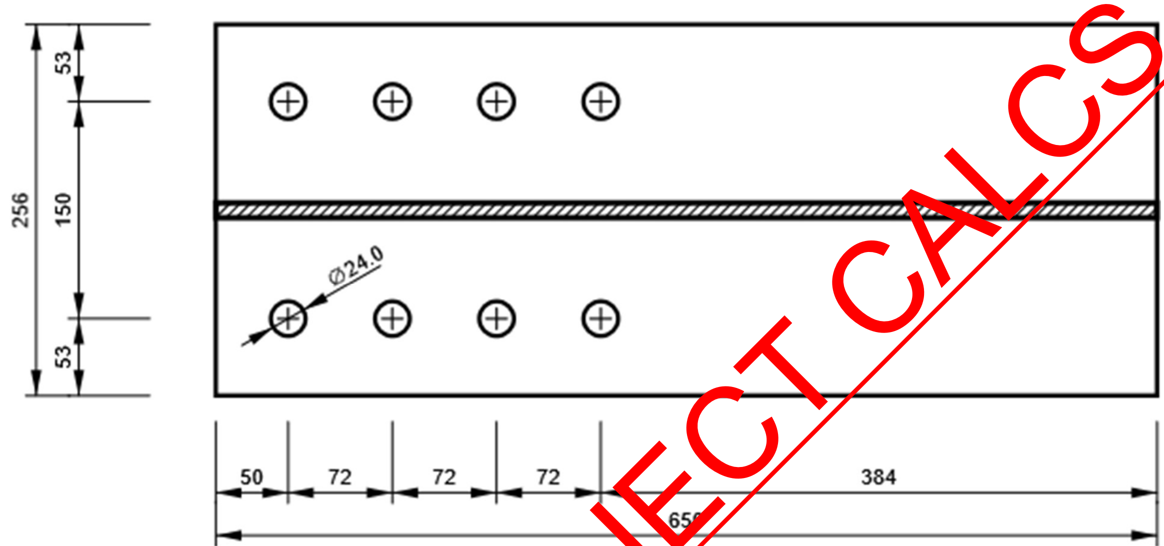

B1, UC 254 x 254 x 89 - Top flange 1:

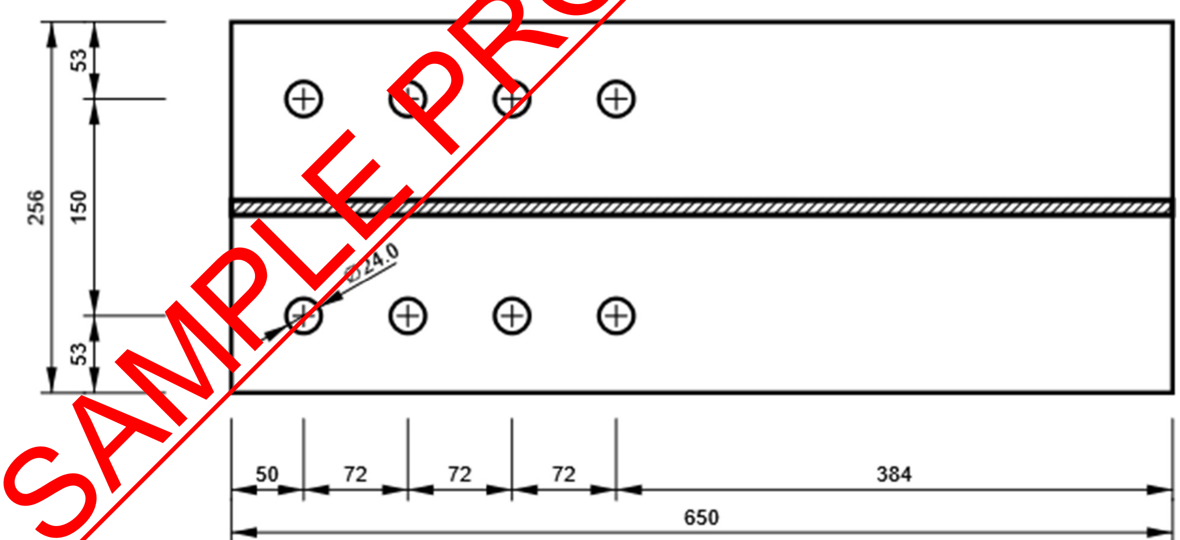

PEPP PEARL ENGINEERS, PLANNERS & PROJECT MANAGERS 02 TOWERFIELDS WESTERHAM ROAD BROMLEY, BR2 6HF Email: info@Pearlepp.co.uk Website: www. pearlepp.co.uk Tel no. 02035763199	**Project:** 68 GROVE PARK RD UK		**Sheet No./Rev.** 614
	Job Ref. 2024-06-	**Structural Engineer** **MM**	**Date** **11/06/2024**

B1, UC 254 x 254 x 89 - Web 1:

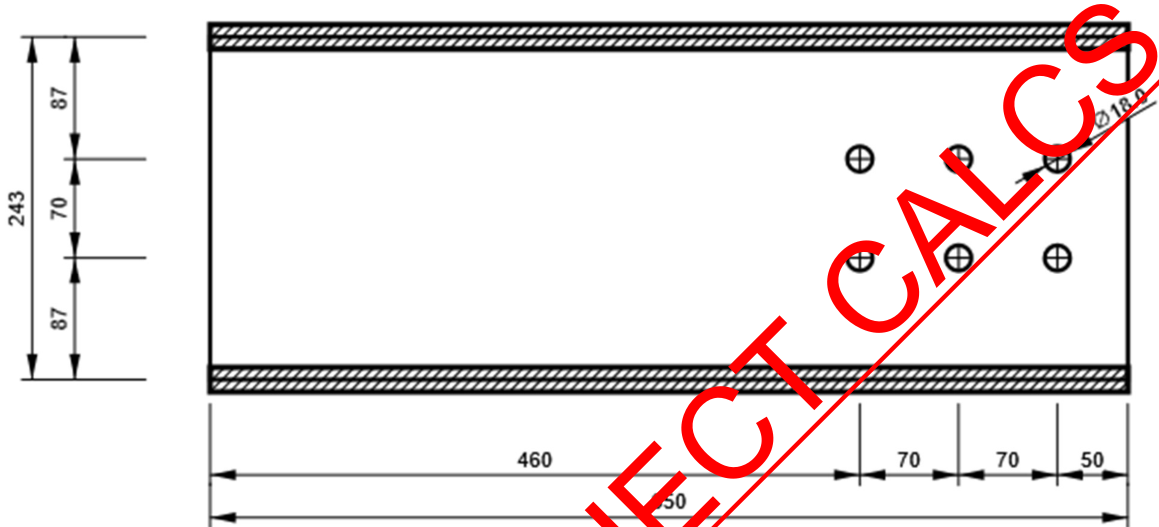

B2, UC 254 x 254 x 89 - Bottom flange 1:

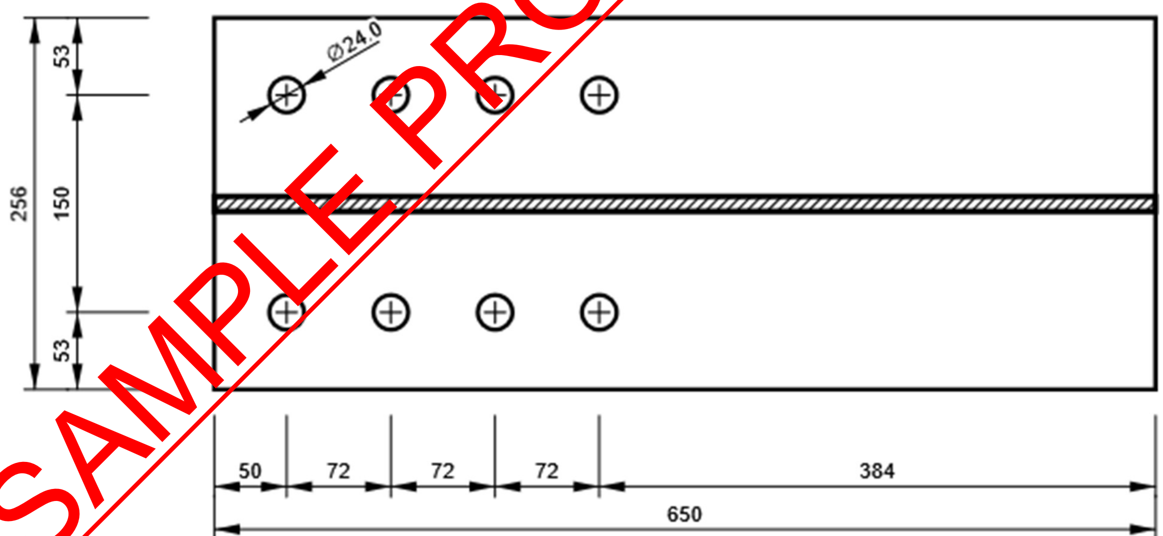

B2, UC 254 x 254 x 89 - Top flange 1:

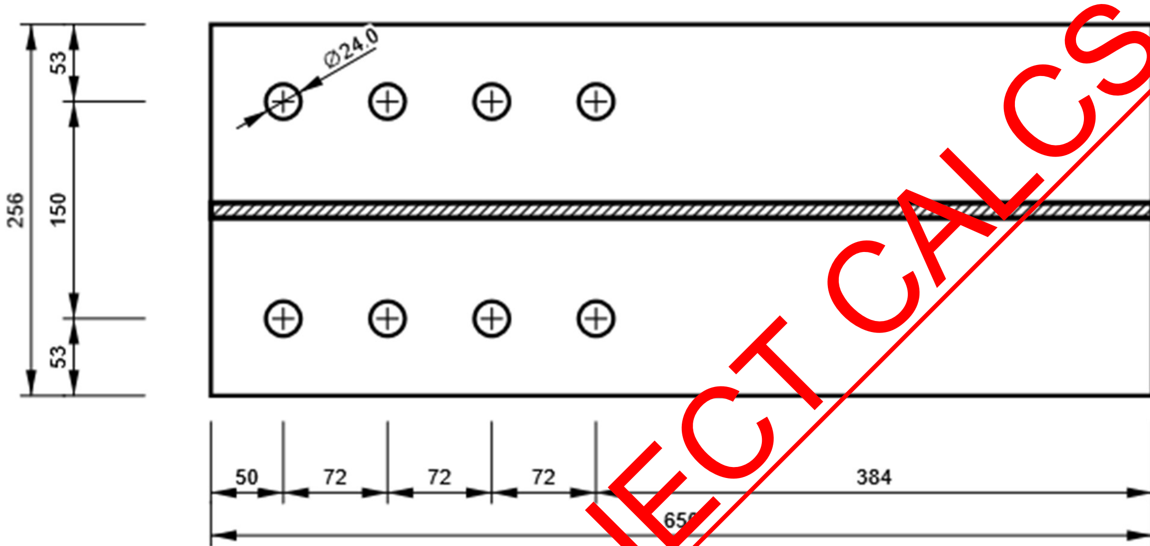

B2, UC 254 x 254 x 89 - Web 1:

- **Splice Connection-3**

Project data

Project name	
Project number	
Author	
Description	Splice Details UC 203x203x46
Date	
Design code	EN

Material

Steel	S 355

Project item Splice 3

Design

Name	
Description	
Analysis	Stress, strain/ simplified loading

Beams and columns

Name	Cross-section	β – Direction [°]	γ - Pitch [°]	α - Rotation [°]	Offset ex [mm]	Offset ey [mm]	Offset ez [mm]	Forces in	X [mm]
B1	2 - UC 203 x 203 x 46	0.0	0.0	0.0	0	0	0	Bolts	151
B2	2 - UC 203 x 203 x 46	180.0	0.0	0.0	0	0	0	Bolts	151

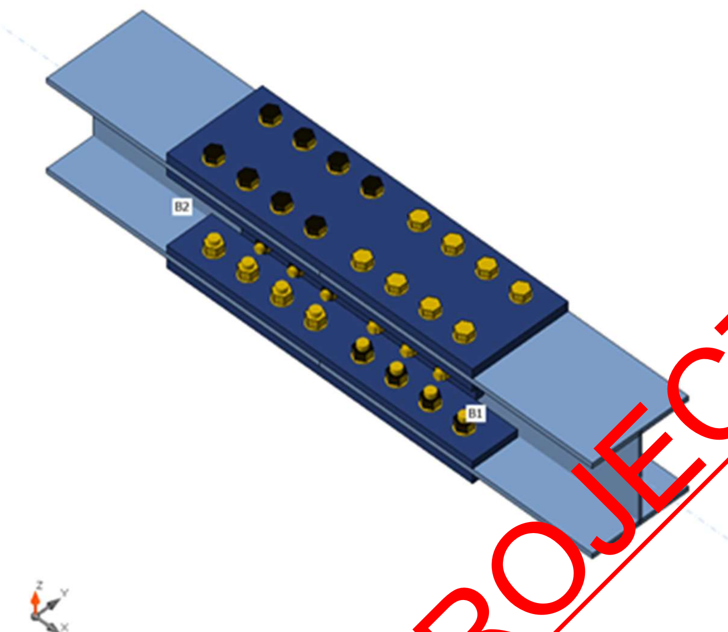

B2
B1

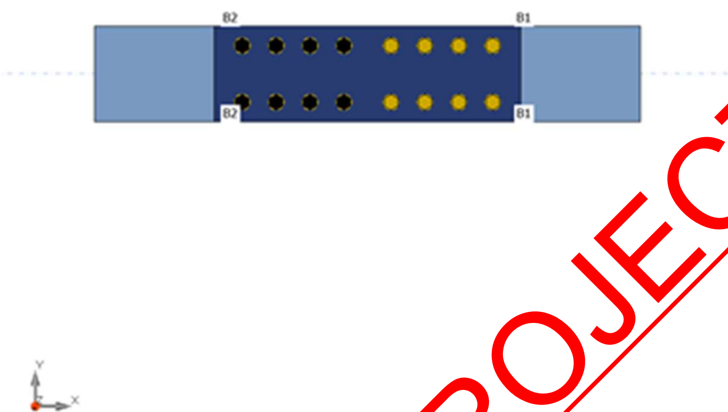

B2
B1
B2
B1

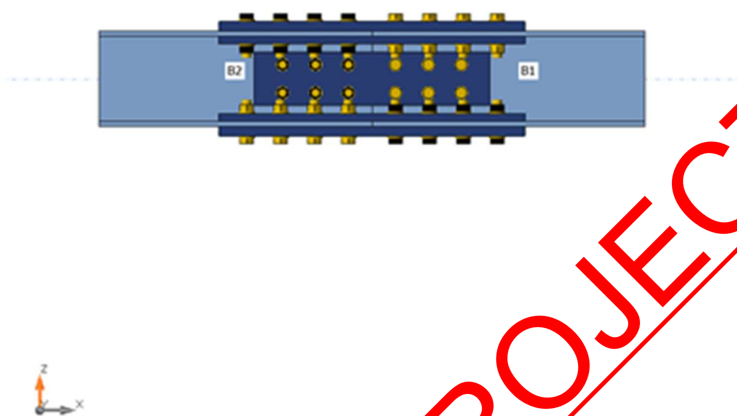

B2
B1
z
x

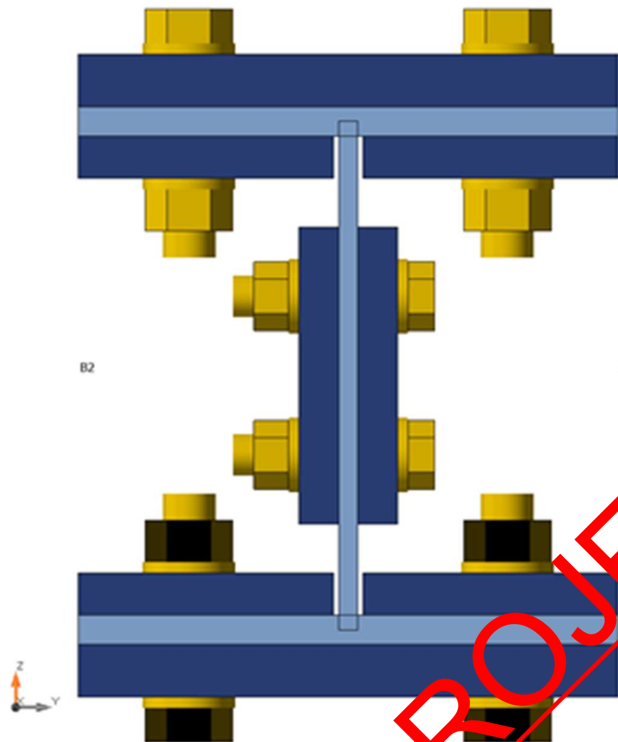

Cross-sections

Name	Material
2 - UC 203 x 203 x 46	S 275

Cross-sections

Name	Material	Drawing
2 - UC 203 x 203 x 46	S 275	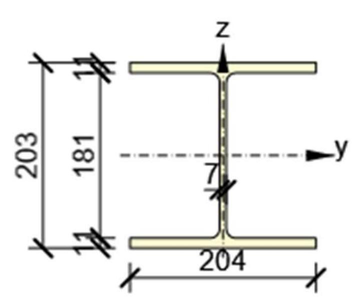

Bolts

Name	Bolt assembly	Diameter [mm]	fu [MPa]	Gross area [mm^2]
M20 8.8	M20 8.8	20	800.0	314
M16 8.8	M16 8.8	16	800.0	201

Load effects (equilibrium not required)

Name	Member	N [kN]	Vy [kN]	Vz [kN]	Mx [kNm]	My [kNm]	Mz [kNm]
LE1	B1	0.0	0.0	-70.0	0.0	80.0	0.0

Check

Summary

Name	Value	Status
Analysis	100.0%	OK
Plates	0.3 < 5.0%	OK
Bolts	40.0 < 100%	OK
Buckling	7.85	

Plates

Name	Thickness [mm]	Loads	σ_{Ed} [MPa]	ε_{Pl} [%]	σc_{Ed} [MPa]	Status
B1-bfl 1	11.0	LE1	240.9	0.0	6.7	OK
B1-tfl 1	11.0	LE1	272.5	0.1	5.4	OK
B1-w 1	7.2	LE1	174.3	0.0	4.9	OK
B2-bfl 1	11.0	LE1	275.1	0.1	47.5	OK
B2-tfl 1	11.0	LE1	275.7	0.3	50.2	OK
B2-w 1	7.2	LE1	252.6	0.1	50.2	OK
SPL1a	20.0	LE1	228.0	0.0	50.2	OK
SPL1b	16.0	LE1	223.1	0.0	3.7	OK
SPL1c	16.0	LE1	215.8	0.0	3.7	OK
SPL2a	20.0	LE1	194.3	0.0	6.2	OK
SPL2b	16.0	LE1	172.2	0.0	47.5	OK
SPL2c	16.0	LE1	172.5	0.0	47.5	OK
SPL3a	15.0	LE1	126.1	0.0	1.2	OK
SPL3b	15.0	LE1	118.0	0.0	1.1	OK

Design data

Material	f_y	ε_{lim}

	[MPa]	[%]
S 275	275.0	5.0

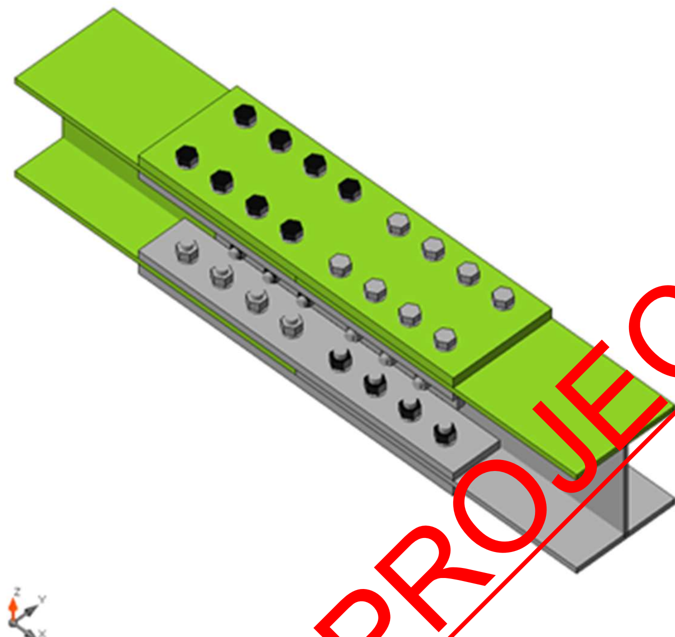

Overall check, LE1

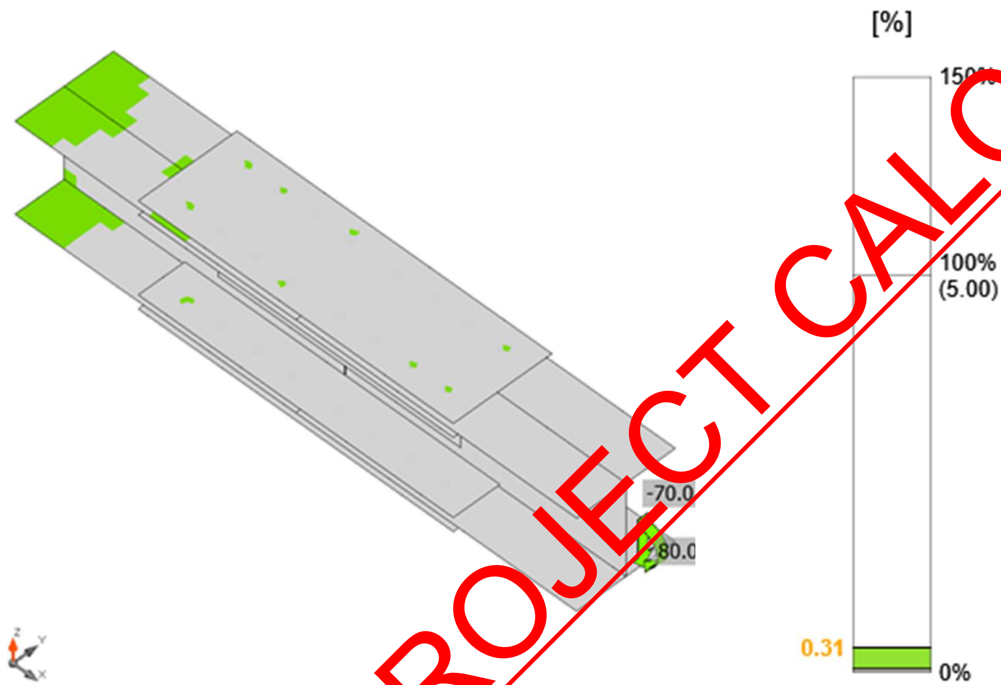

Strain check, LE1

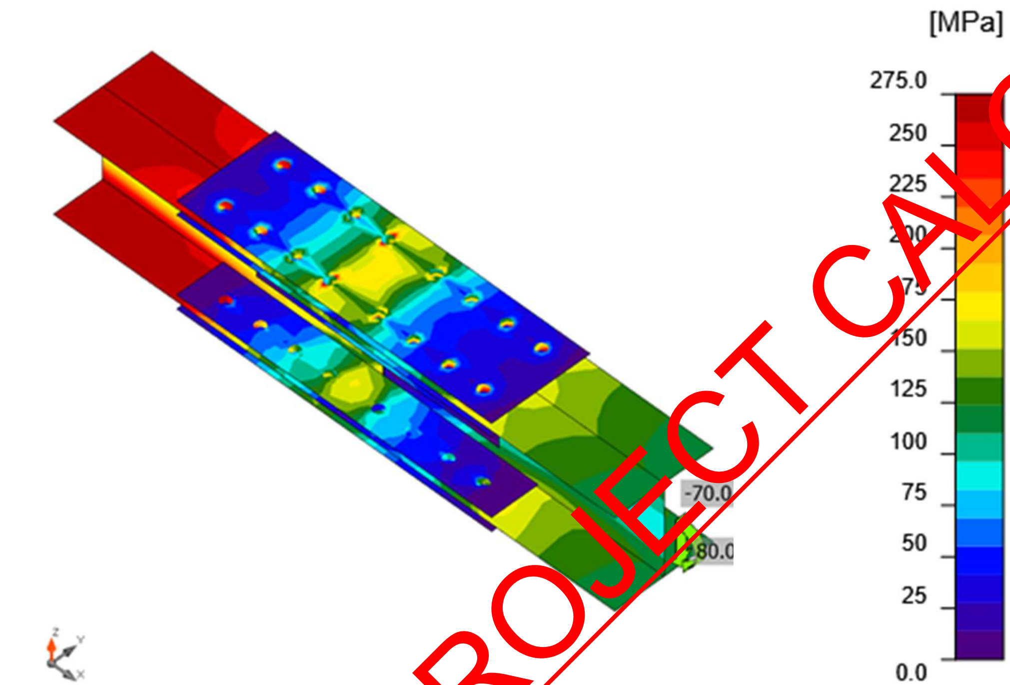

Equivalent stress, LE1

Bolts

	Name	Grade	Loads	$F_{t,Ed}$ [kN]	V [kN]	Ut_t [%]	$F_{b,Rd}$ [kN]	Ut_s [%]	Ut_{ts} [%]	Status
	B1	M20 8.8 - 1	LE1	12.7	27.1	9.0	143.3	33.7	35.2	OK
	B2	M20 8.8 - 1	LE1	5.5	28.2	3.9	159.1	30.3	32.8	OK
	B3	M20 8.8 - 1	LE1	2.0	29.5	1.4	159.1	31.7	32.3	OK
	B4	M20 8.8 - 1	LE1	5.5	31.7	3.9	159.1	34.3	36.5	OK
	B5	M20 8.8 - 1	LE1	12.7	27.1	9.0	143.3	33.7	35.2	OK
	B6	M20 8.8 - 1	LE1	5.5	28.2	3.9	159.1	30.3	32.8	OK
	B7	M20 8.8 - 1	LE1	2.0	29.5	1.4	159.1	31.7	32.3	OK
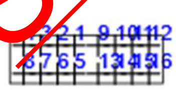	B8	M20 8.8 - 1	LE1	5.5	31.7	3.9	159.1	34.3	36.5	OK
	B9	M20 8.8 - 1	LE1	9.3	24.6	6.6	143.3	32.3	30.9	OK
	B10	M20 8.8 - 1	LE1	4.1	27.6	2.9	159.1	29.6	31.4	OK
	B11	M20 8.8 - 1	LE1	2.2	30.4	1.5	159.1	32.3	33.4	OK
	B12	M20 8.8 - 1	LE1	7.6	34.0	5.4	159.1	36.1	40.0	OK
	B13	M20 8.8 - 1	LE1	9.3	24.6	6.6	143.3	32.3	30.9	OK
	B14	M20 8.8 - 1	LE1	4.1	27.6	2.9	159.1	29.6	31.3	OK
	B15	M20 8.8 - 1	LE1	2.2	30.4	1.5	159.1	32.3	33.3	OK
	B16	M20 8.8 - 1	LE1	7.6	34.0	5.4	159.1	36.1	40.0	OK
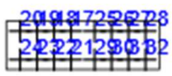
	B17	M20 8.8 - 1	LE1	13.0	27.0	9.2	159.1	30.4	35.2	OK
	B18	M20 8.8 - 1	LE1	3.4	28.1	2.4	159.1	30.5	31.6	OK
	B19	M20 8.8 - 1	LE1	1.5	29.6	1.0	159.1	31.9	32.2	OK
	B20	M20 8.8 - 1	LE1	1.3	32.3	0.9	189.2	34.3	34.9	OK
	B21	M20 8.8 - 1	LE1	12.9	27.0	9.2	159.1	30.4	35.2	OK
	B22	M20 8.8 - 1	LE1	3.4	28.1	2.4	159.1	30.5	31.6	OK
	B23	M20 8.8 - 1	LE1	1.5	29.6	1.0	159.1	31.9	32.2	OK
	B24	M20 8.8 - 1	LE1	1.3	32.3	0.9	189.2	34.3	34.9	OK
	B25	M20 8.8 - 1	LE1	13.1	24.3	9.3	159.1	28.7	32.4	OK
	B26	M20 8.8 - 1	LE1	2.8	27.1	2.0	159.1	29.6	30.3	OK
	B27	M20 8.8 - 1	LE1	1.7	30.6	1.2	159.1	32.5	33.4	OK
	B28	M20 8.8 - 1	LE1	1.5	35.0	1.1	189.2	37.2	37.9	OK
	B29	M20 8.8 - 1	LE1	13.1	24.3	9.3	159.1	28.7	32.4	OK
	B30	M20 8.8 - 1	LE1	2.8	27.1	2.0	159.1	29.6	30.3	OK
	B31	M20 8.8 - 1	LE1	1.7	30.6	1.2	159.1	32.5	33.4	OK
	B32	M20 8.8 - 1	LE1	1.5	35.0	1.1	189.2	37.2	37.9	OK
	B33	M16 8.8 - 2	LE1	0.5	5.0	0.5	99.1	10.1	8.7	OK
	B34	M16 8.8 - 2	LE1	0.1	2.7	0.1	99.1	5.4	4.5	OK
	B35	M16 8.8 - 2	LE1	0.2	7.2	0.2	99.1	14.5	12.1	OK
	B36	M16 8.8 - 2	LE1	0.1	4.6	0.2	99.1	9.3	7.8	OK
	B37	M16 8.8 - 2	LE1	0.3	2.1	0.3	99.1	4.3	3.7	OK
	B38	M16 8.8 - 2	LE1	0.8	7.0	0.9	85.3	16.4	12.3	OK
	B39	M16 8.8 - 2	LE1	1.2	11.9	1.4	99.1	24.1	20.8	OK
	B40	M16 8.8 - 2	LE1	0.4	5.8	0.4	99.1	11.7	9.9	OK
	B41	M16 8.8 - 2	LE1	0.5	10.2	0.5	99.1	20.7	17.4	OK
	B42	M16 8.8 - 2	LE1	0.4	12.0	0.4	99.1	24.1	20.2	OK
	B43	M16 8.8 - 2	LE1	0.2	5.2	0.2	99.1	10.5	8.8	OK
	B44	M16 8.8 - 2	LE1	0.9	9.5	0.9	99.1	19.1	16.4	OK
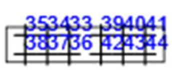
Design data

Name	$F_{t,Rd}$ [kN]	$B_{p,Rd}$ [kN]	$F_{v,Rd}$ [kN]
M20 8.8 - 1	141.1	326.8	94.1
M16 8.8 - 2	90.4	243.2	60.3

Detailed result for B12

Tension resistance check (EN 1993-1-8 tab 3.4)

$$F_{t,Rd} = \frac{k_2 f_{ub} A_s}{\gamma_{M2}} = 141.1 \text{ kN} \geq F_t = 7.6 \text{ kN}$$

where:

$k_2 = 0.90$ – Factor

$f_{ub} = 800.0$ MPa – Ultimate tensile strength of the bolt

$A_s = 245$ mm^2 – Tensile stress area of the bolt

PEPP PEARL ENGINEERS, PLANNERS & PROJECT MANAGERS 02 TOWERFIELDS WESTERHAM ROAD BROMLEY, BR2 6HF Email: info@Pearlepp.co.uk Website: www. pearlepp.co.uk Tel no. 02035763199	**Project:** 68 GROVE PARK RD UK		**Sheet No./Rev.** 626
	Job Ref. 2024-06-	**Structural Engineer** **MM**	**Date** **11/06/2024**

γ_{M2} = 1.25 – Safety factor

Punching resistance check (EN 1993-1-8 tab 3.4)

$B_{p,Rd} = \frac{0.6\pi d_m t_p f_u}{\gamma_{M2}} =$ 326.8 kN ≥ $F_t =$ 7.6 kN

where:

d_m = 32 mm – The mean of the across points and across flats dimensions of the bolt head or the nut, whichever is smaller

t_p = 16 mm – Thickness

f_u = 430.0 MPa – Ultimate strength

γ_{M2} = 1.25 – Safety factor

Shear resistance check (EN 1993-1-8 tab 3.4)

$F_{v,Rd} = \frac{\beta_p \alpha_v f_{ub} A}{\gamma_{M2}} =$ 94.1 kN ≥ $V =$ 34.0 kN

where:

β_p = 1.00 – Reducing factor

α_v = 0.60 – Reducing factor

f_{ub} = 800.0 MPa – Ultimate tensile strength of the bolt

A = 245 mm^2 – Tensile stress area of the bolt

γ_{M2} = 1.25 – Safety factor

Bearing resistance check (EN 1993-1-8 tab 3.4)

$F_{b,Rd} = \frac{k_1 \alpha_b f_u d t}{\gamma_{M2}} =$ 169.1 kN ≥ $V =$ 57.1 kN

where:

$k_1 = \min(2.8\frac{e_2}{d_0} - 1.7, 1.4\frac{p_2}{d_0} - 1.7, 2.5) =$ 2.50 – Factor for edge distance and bolt spacing perpendicular to the direction of load transfer

$\alpha_b = \min(\frac{e_1}{3d_0}, \frac{p_1}{3d_0} - \frac{1}{4}, \frac{f_{ub}}{f_u}, 1) =$ 0.84 – Factor for end distance and bolt spacing in direction of load transfer

e_2 = 42 mm – Distance to the plate edge perpendicular to the shear force

p_2 = 120 mm – Distance between bolts perpendicular to the shear force

d_0 = 22 mm – Bolt hole diameter

e_1 = 266 mm – Distance to the plate edge in the direction of the shear force

p_1 = 72 mm – Distance between bolts in the direction of the shear force

f_{ub} = 800.0 MPa – Ultimate tensile strength of the bolt

f_u = 430.0 MPa – Ultimate strength

d = 20 mm – Nominal diameter of the fastener

$t =$ 11 mm – Thickness of the plate

$\gamma_{M2} =$ 1.25 – Safety factor

Interaction of tension and shear (EN 1993-1-8 tab 3.4)

$$U_{tts} = \frac{F_{v,Ed}}{F_{v,Rd}} + \frac{F_{t,Ed}}{1.4F_{t,Rd}} = \quad 40.0 \quad \%$$

Utilization in tension

$$U_{tt} = \frac{F_{t,Ed}}{\min(F_{t,Rd};B_{p,Rd})} = \quad 5.4 \quad \%$$

Utilization in shear

$$U_{ts} = \frac{V_{Ed}}{\min(F_{v,Rd};F_{b,Rd})} = \quad 36.1 \quad \%$$

Buckling

Loads	Shape	Factor [-]
LE1	1	7.85
	2	10.20
	3	12.98
	4	13.98
	5	15.86
	6	18.19

Bill of material

Manufacturing operations

Name	Plates [mm]	Shape	Nr.	Welds [mm]	Length [mm]	Bolts	Nr.
SPL1	P20.0x650.0-203.6 (S 275)	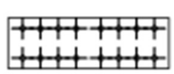	1			M20 8.8	16
	P16.0x650.0-96.2 (S 275)	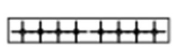	1				

PEPP
PEARL ENGINEERS, PLANNERS & PROJECT MANAGERS
02 TOWERFIELDS WESTERHAM ROAD
BROMLEY, BR2 6HF
Email: info@Pearlepp.co.uk
Website: www. pearlepp.co.uk
Tel no. 02035763199

	P16.0x650.0-96.2 (S 275)	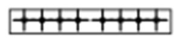	1				
SPL2	P20.0x650.0-203.6 (S 275)	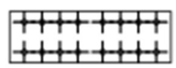	1			M20 8.8	16
	P16.0x650.0-96.2 (S 275)	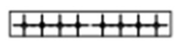	1				
	P16.0x650.0-96.2 (S 275)		1				
SPL3	P15.0x500.0-112.2 (S 275)	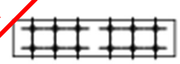	1			M16 8.8	12
	P15.0x500.0-112.2 (S 275)	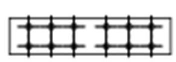	1				

Bolts

Name	Grip length [mm]	Count
M20 8.8	47	32
M16 8.8	37	12

PEPP PEARL ENGINEERS, PLANNERS & PROJECT MANAGERS 02 TOWERFIELDS WESTERHAM ROAD BROMLEY, BR2 6HF Email: info@Pearlepp.co.uk Website: www. pearlepp.co.uk Tel no. 02035763199	**Project:** 68 GROVE PARK RD UK		**Sheet No./Rev.** 629
	Job Ref. 2024-06-	**Structural Engineer** **MM**	**Date** **11/06/2024**

Drawing

SPL1 - SPL1a

P20.0x204-650 (S 275)

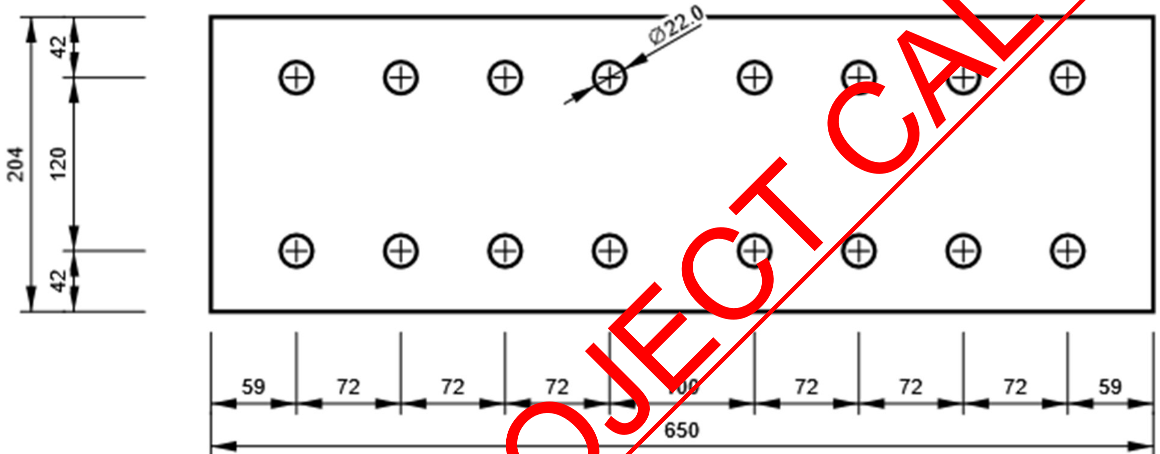

SPL1 - SPL1b

P16.0x96-650 (S 275)

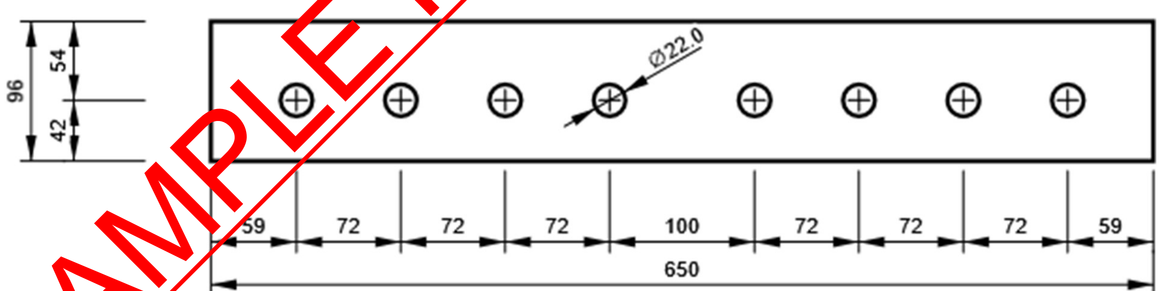

PEPP PEARL ENGINEERS, PLANNERS & PROJECT MANAGERS 02 TOWERFIELDS WESTERHAM ROAD BROMLEY, BR2 6HF Email: info@Pearlepp.co.uk Website: www. pearlepp.co.uk Tel no. 02035763199	**Project:** 68 GROVE PARK RD UK	**Sheet No./Rev.** 630
	Job Ref. 2024-06- | **Structural Engineer** **MM**	**Date** **11/06/2024**

SPL1 - SPL1c

P16.0x96-650 (S 275)

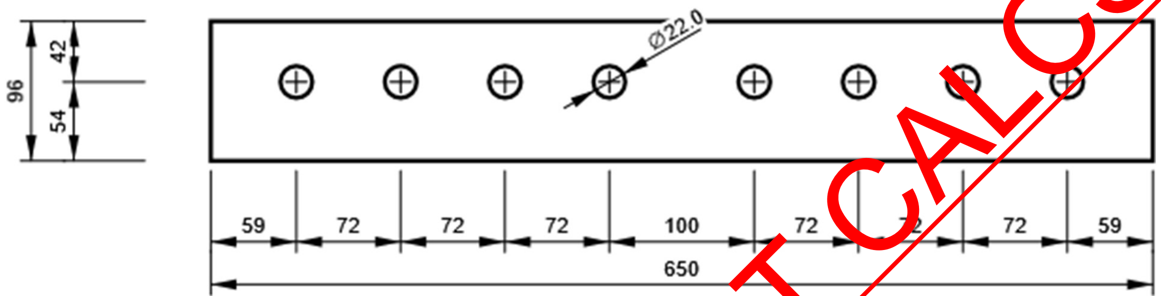

SPL2 - SPL2a

P20.0x204-650 (S 275)

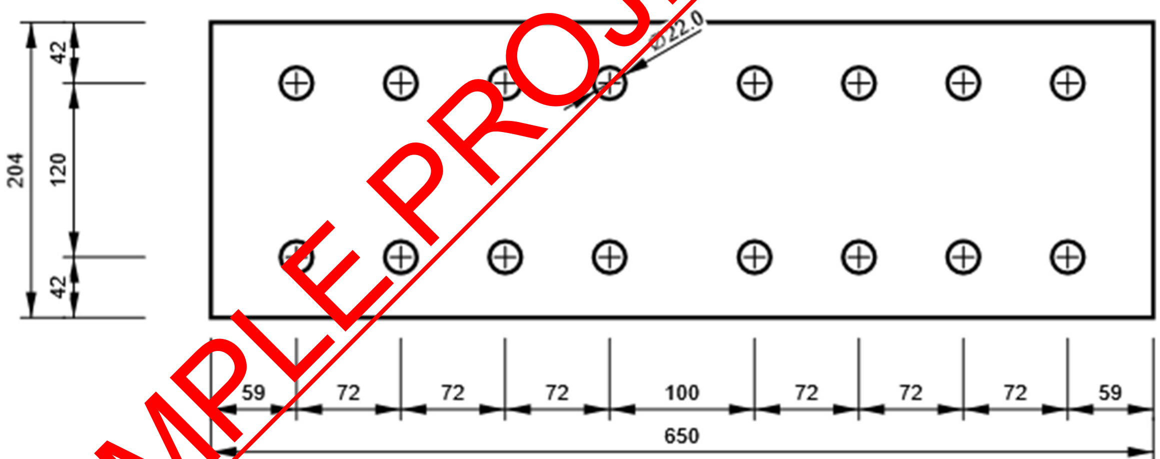

02 TOWERFIELDS WESTERHAM ROAD BROMLEY, BR2 6HF Email: info@Pearlepp.co.uk Website: www. pearlepp.co.uk Tel no. 02035763199	**Project:** 68 GROVE PARK RD UK		**Sheet No./Rev.** 631
	Job Ref. 2024-06-	**Structural Engineer** **MM**	**Date** **11/06/2024**

SPL2 - SPL2b

P16.0x96-650 (S 275)

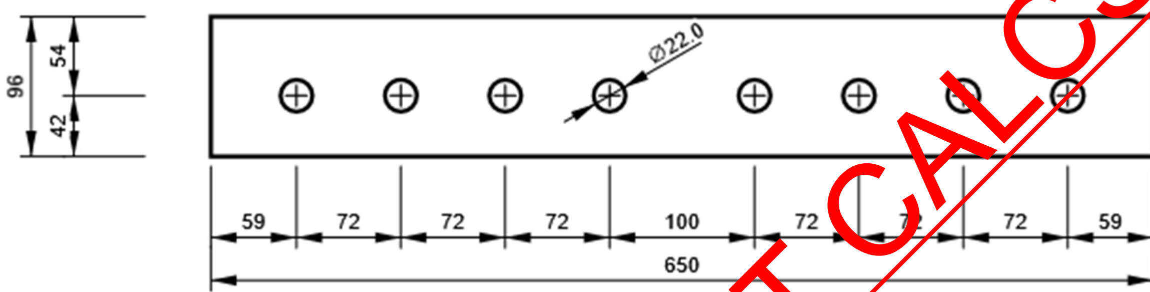

SPL2 - SPL2c

P16.0x96-650 (S 275)

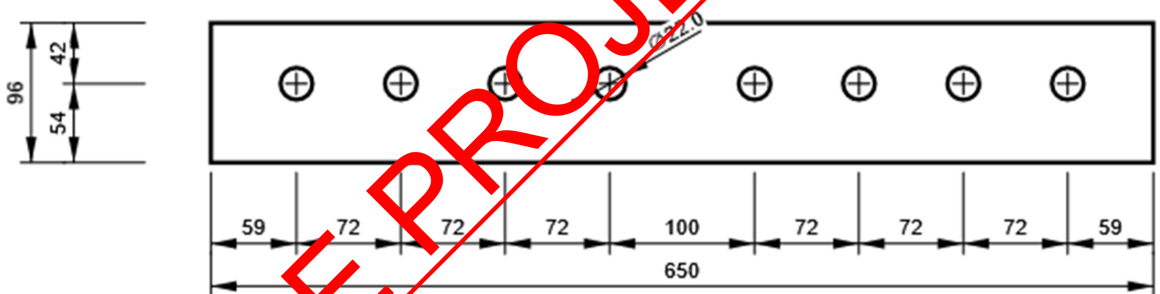

SPL3 - SPL3a

P15.0x112-500 (S 275)

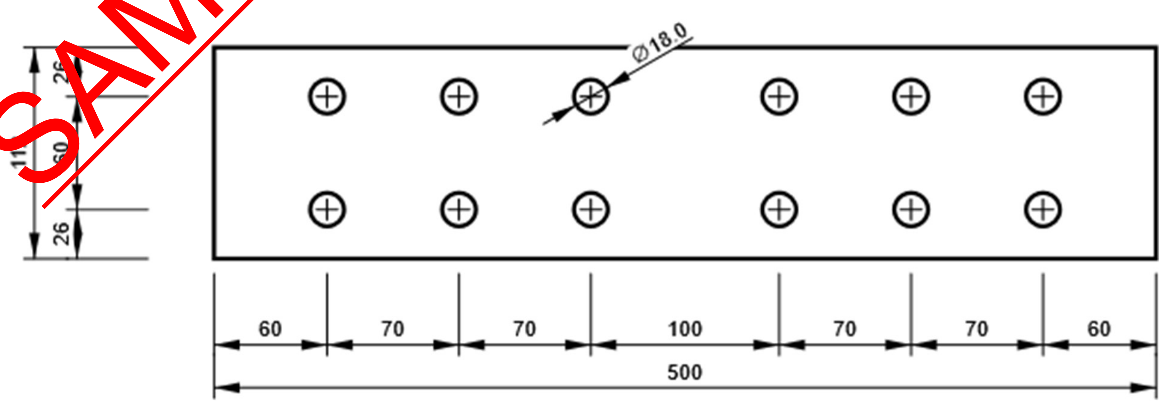

02 TOWERFIELDS WESTERHAM ROAD BROMLEY, BR2 6HF Email: info@Pearlepp.co.uk Website: www. pearlepp.co.uk Tel no. 02035763199	**Project:** 68 GROVE PARK RD UK		**Sheet No./Rev.** 632
	Job Ref. 2024-06-	**Structural Engineer** **MM**	**Date** **11/06/2024**

SPL3 - SPL3b

P15.0x112-500 (S 275)

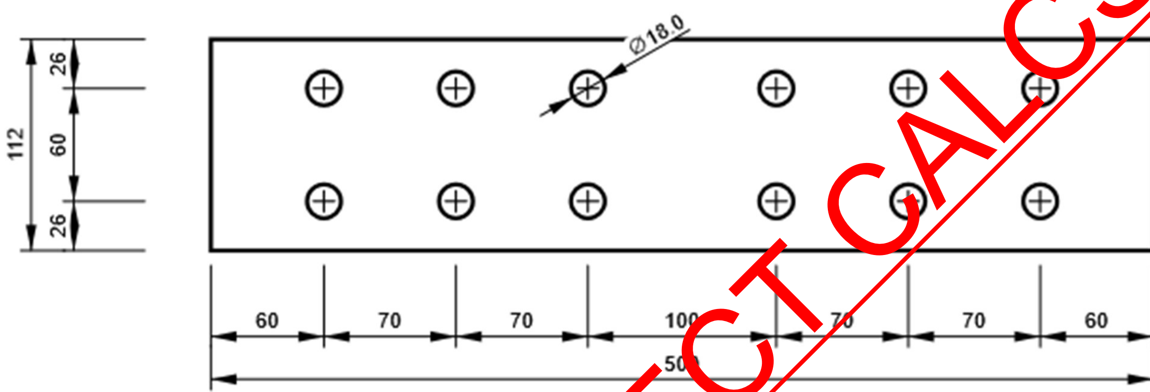

B1, UC 203 x 203 x 46 - Bottom flange

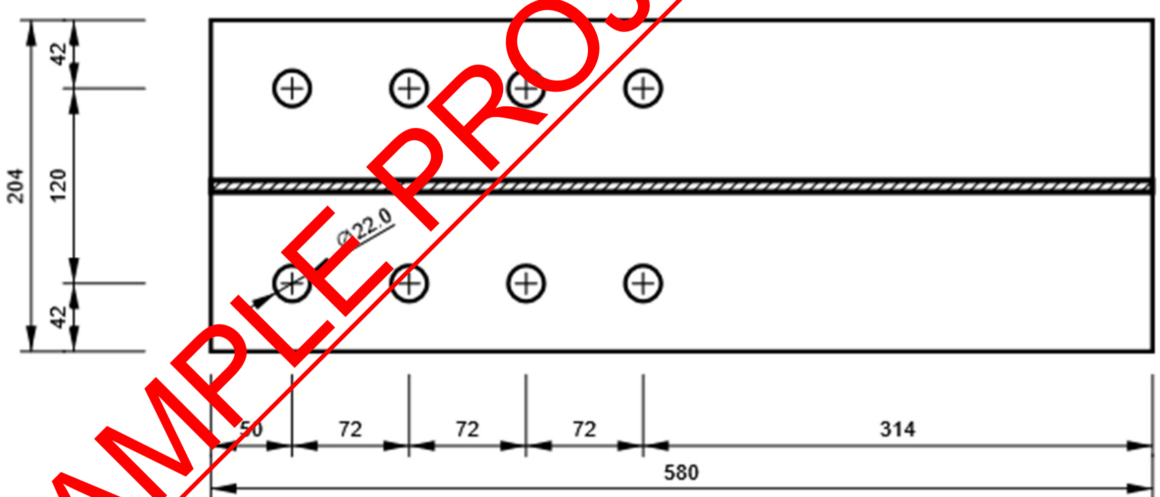

02 TOWERFIELDS WESTERHAM ROAD
BROMLEY, BR2 6HF
Email: info@Pearlepp.co.uk
Website: www. pearlepp.co.uk
Tel no. 02035763199

Project: 68 GROVE PARK RD UK		**Sheet No./Rev.** 633
Job Ref. 2024-06-	**Structural Engineer** **MM**	**Date** **11/06/2024**

B1, UC 203 x 203 x 46 - Top flange 1:

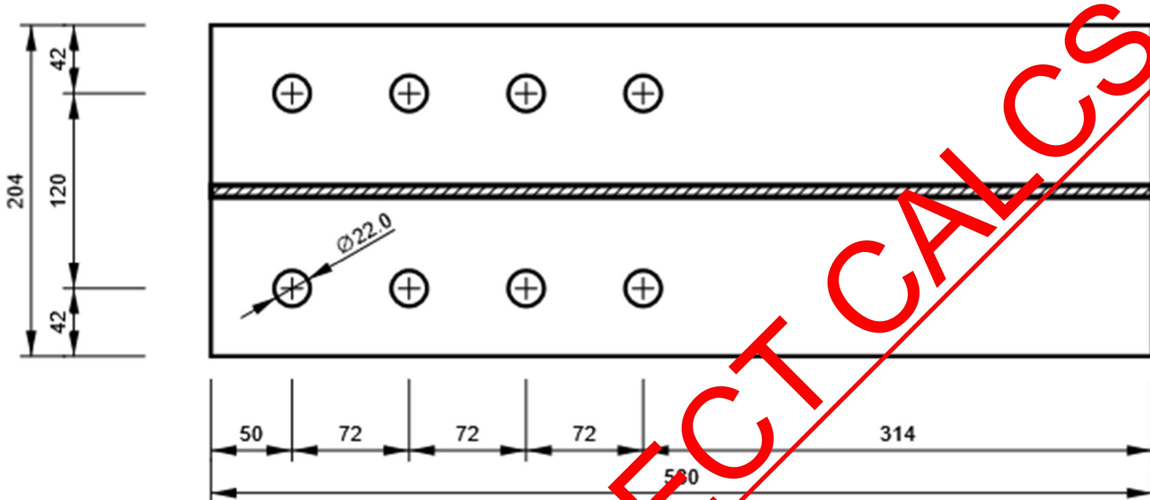

B1, UC 203 x 203 x 46 - Web 1:

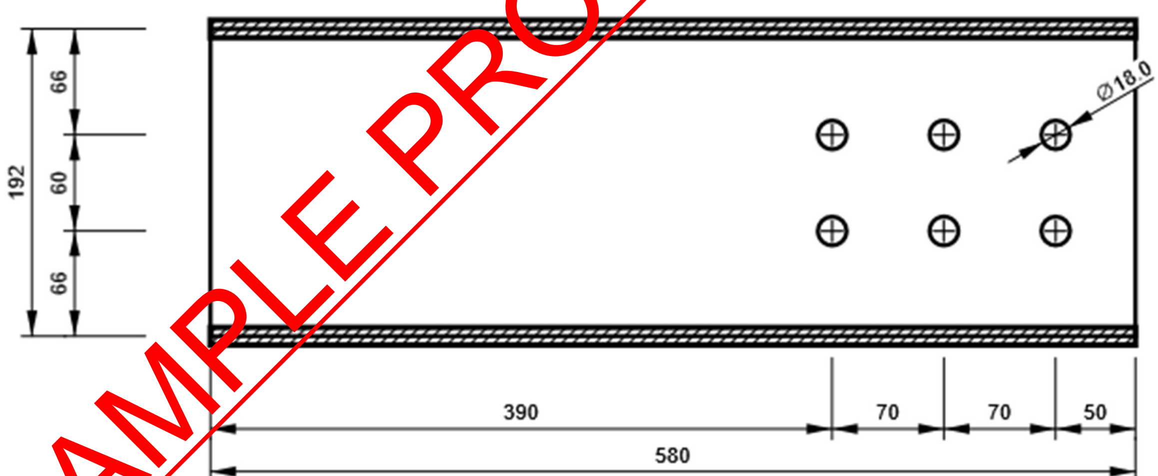

B2, UC 203 x 203 x 46 - Bottom flange 1:

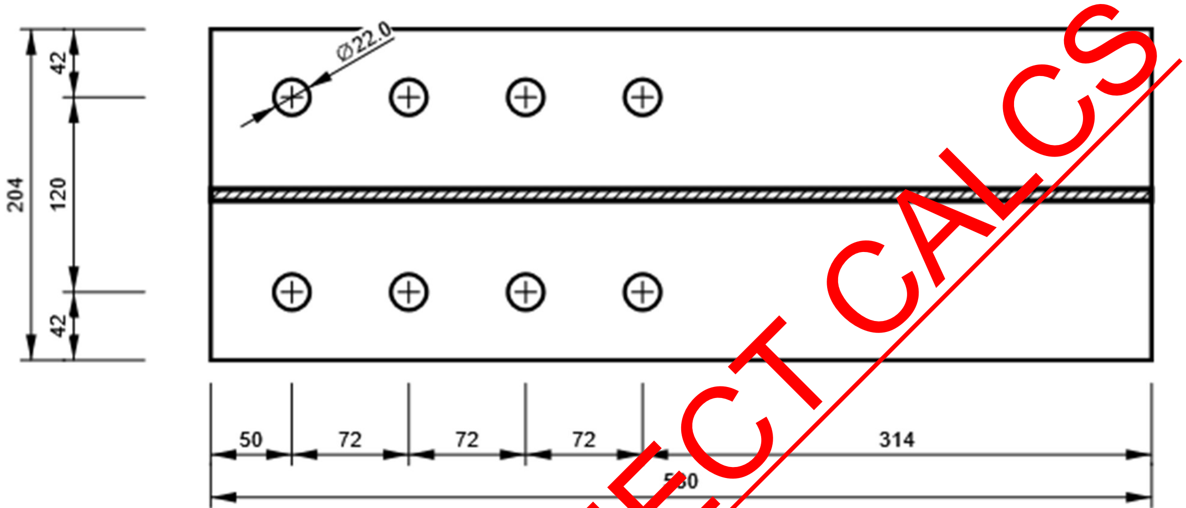

B2, UC 203 x 203 x 46 - Top flange 1:

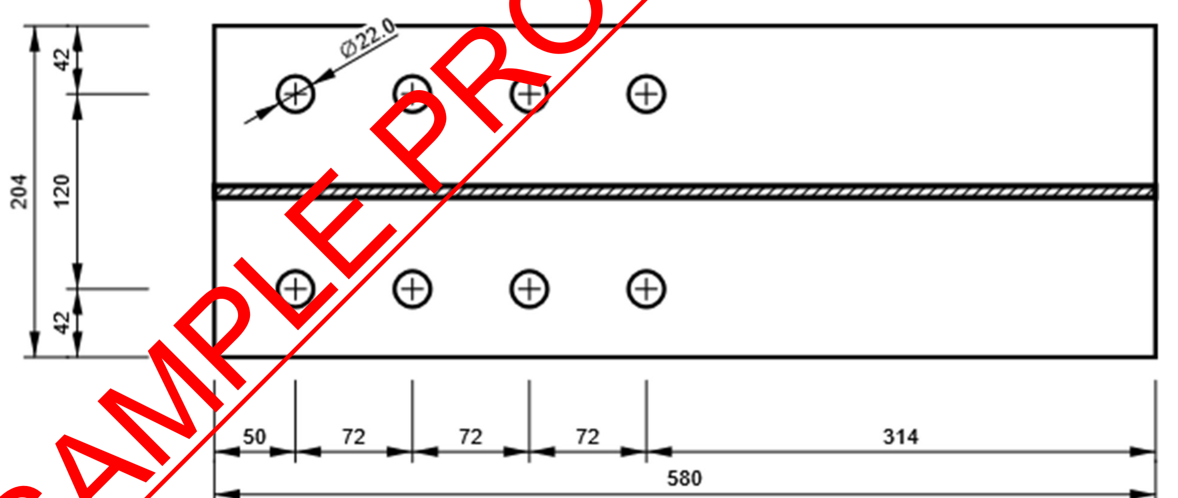

B2, UC 203 x 203 x 46 - Web 1:

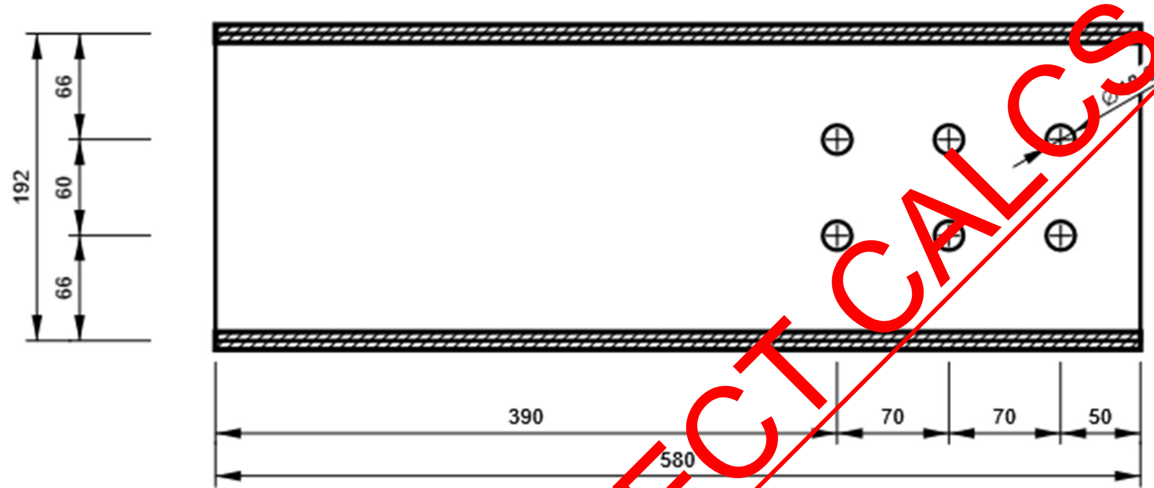

- **Splice Connection-4**

Project data

Project name	
Project number	
Author	
Description	Splice Details UC 203x203x60
Date	
Design code	EN

Material

Steel	S 275, S

Project item Splice 4

Design

Name	
Description	
Analysis	Stress, strain/ simplified loading

Beams and columns

Name	Cross-section	β – Direction [°]	γ - Pitch [°]	α - Rotation [°]	Offset ex [mm]	Offset ey [mm]	Offset ez [mm]	Forces in	X [mm]
B1	2 - UC 203 x 203 x 60	0.0	0.0	0.0	0	0	0	Bolts	151
B2	2 - UC 203 x 203 x 60	180.0	0.0	0.0	0	0	0	Bolts	151

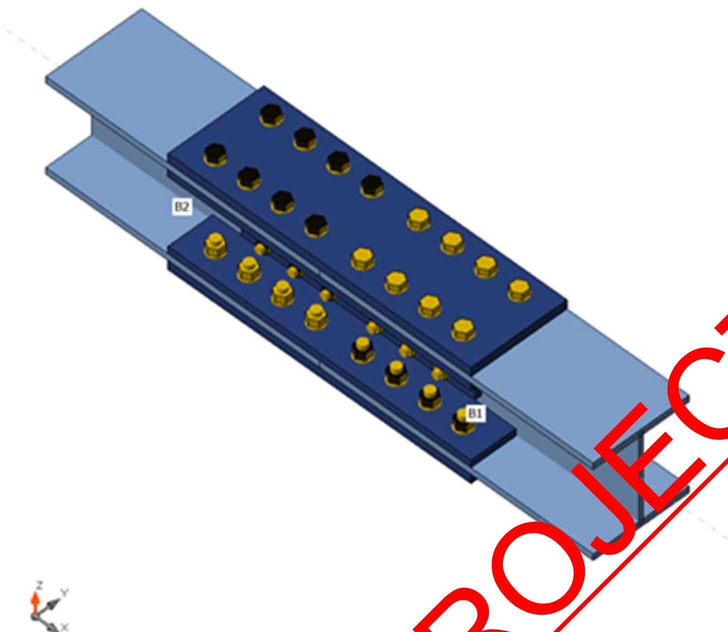

B2
B1

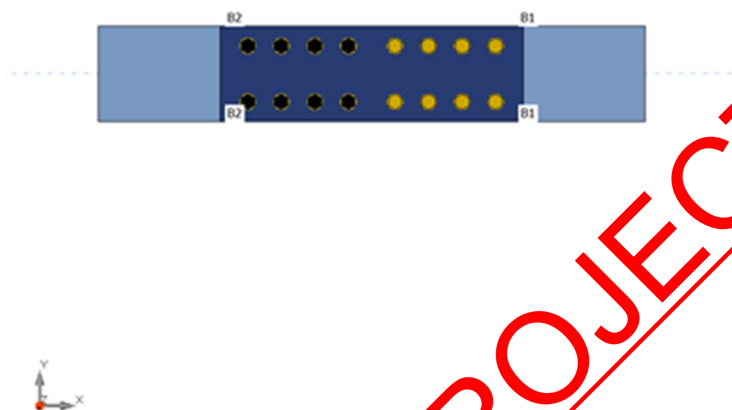

B2
B1
B2
B1
Y
X

02 TOWERFIELDS WESTERHAM ROAD BROMLEY, BR2 6HF Email: info@Pearlepp.co.uk Website: www. pearlepp.co.uk Tel no. 02035763199	**Project:** 68 GROVE PARK RD UK		**Sheet No./Rev.** 639
	Job Ref. 2024-06-	**Structural Engineer** **MM**	**Date** **11/06/2024**

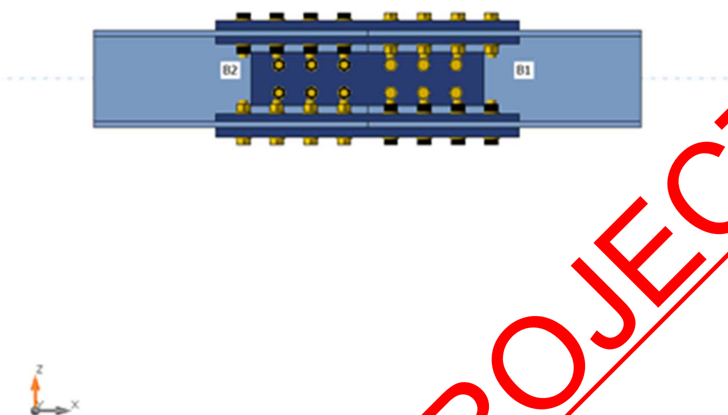

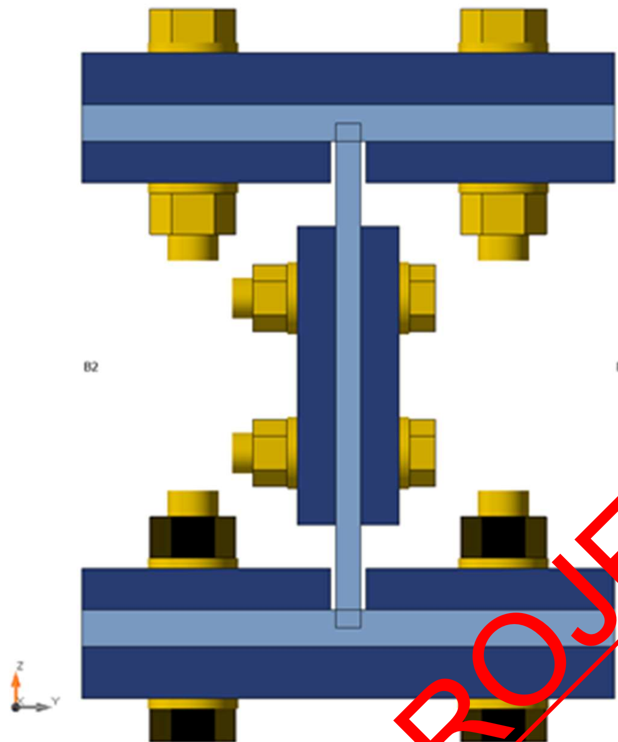

Cross-sections

Name	Material
2 - UC 203 x 203 x 60	S 275

Cross-sections

Name	Material	Drawing
2 - UC 203 x 203 x 60	S 275	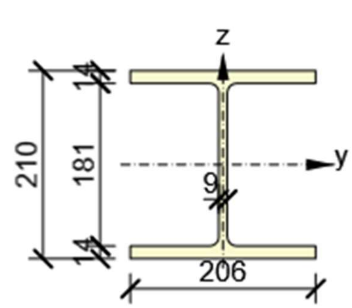

Bolts

Name	Bolt assembly	Diameter [mm]	fu [MPa]	Gross area [mm^2]
M20 8.8	M20 8.8	20	800.0	314
M16 8.8	M16 8.8	16	800.0	201

Load effects (equilibrium not required)

Name	Member	N [kN]	Vy [kN]	Vz [kN]	Mx [kNm]	My [kNm]	Mz [kNm]
LE1	B1	0.0	0.0	-70.0	0.0	80.0	0.0

Check

Summary

Name	Value	Status
Analysis	100.0%	OK
Plates	0.1 < 5.0%	OK
Bolts	38.8 < 100%	OK
Buckling	16.46	

Plates

Name	Thickness [mm]	Loads	σ_{Ed} [MPa]	ε_{Pl} [%]	σc_{Ed} [MPa]	Status
B1-bfl 1	14.2	LE1	181.6	0.0	8.9	OK
B1-tfl 1	14.2	LE1	230.5	0.0	5.7	OK
B1-w 1	9.4	LE1	131.0	0.0	4.8	OK
B2-bfl 1	14.2	LE1	229.3	0.0	47.4	OK
B2-tfl 1	14.2	LE1	275.2	0.1	46.4	OK
B2-w 1	9.4	LE1	211.0	0.0	46.4	OK
SPL1a	20.0	LE1	212.3	0.0	46.4	OK
SPL1b	16.0	LE1	200.0	0.0	4.0	OK
SPL1c	16.0	LE1	192.8	0.0	4.1	OK
SPL2a	20.0	LE1	179.7	0.0	4.8	OK
SPL2b	16.0	LE1	163.8	0.0	47.4	OK
SPL2c	16.0	LE1	164.0	0.0	45.6	OK
SPL3a	15.0	LE1	116.3	0.0	1.2	OK
SPL3b	15.0	LE1	109.8	0.0	1.1	OK

Design data

Material	f_y	ε_{lim}

	[MPa]	[%]
S 275	275.0	5.0

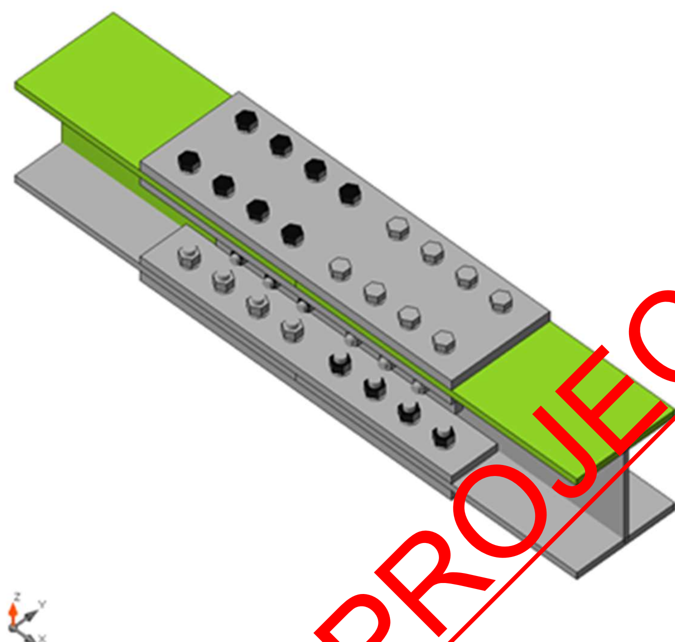

Overall check, LE1

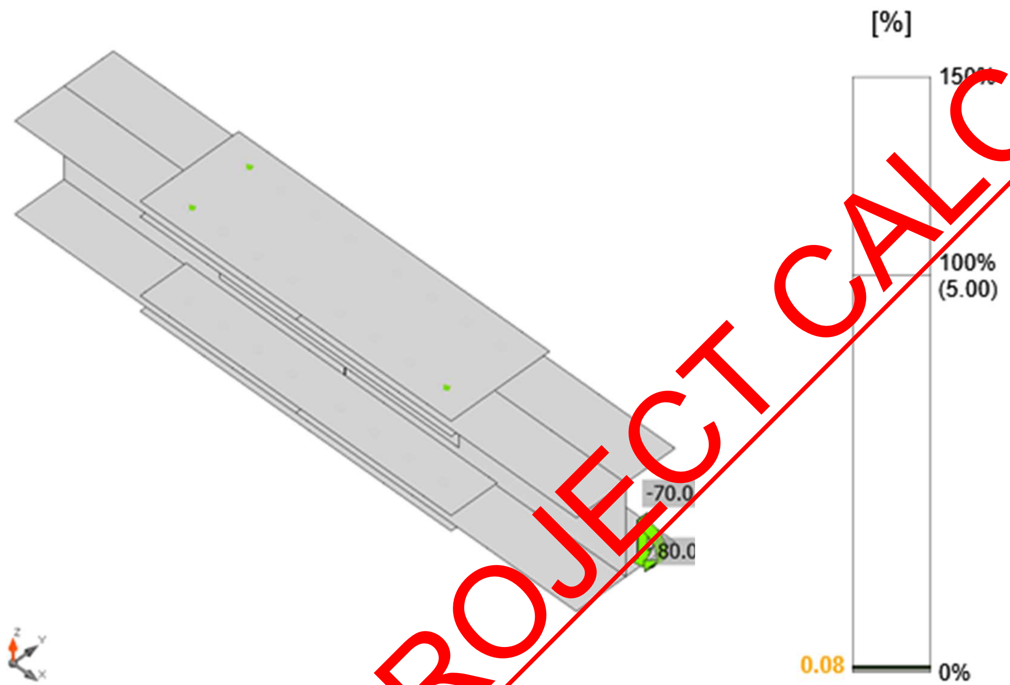

Strain check, LE1

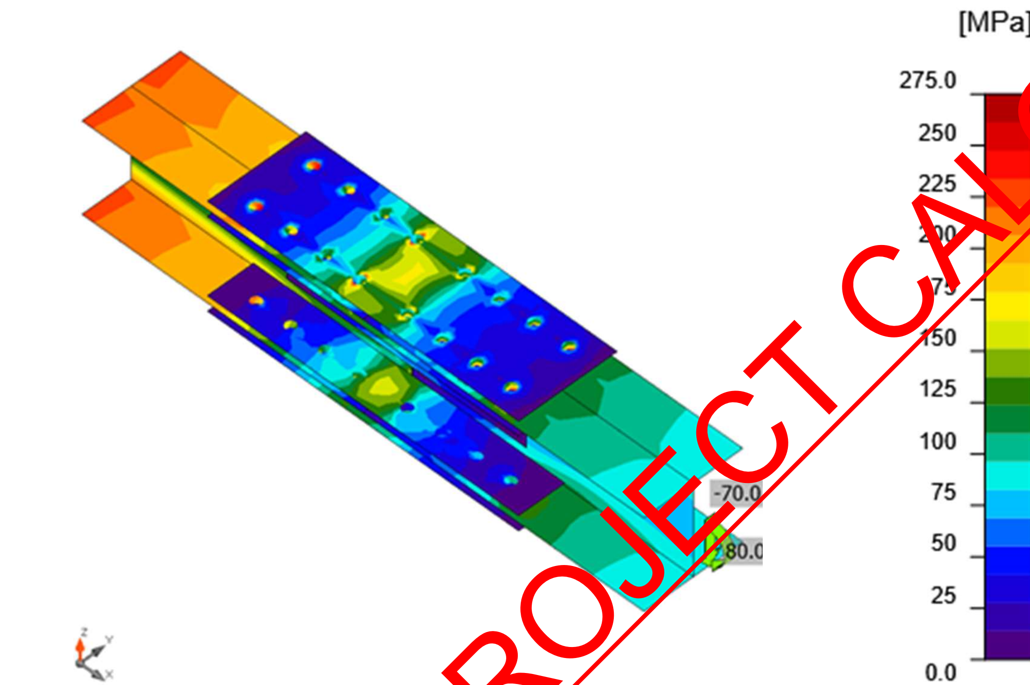

Equivalent stress, LE1

Bolts

	Name	Grade	Loads	$F_{t,Ed}$ [kN]	V [kN]	Ut_t [%]	$F_{b,Rd}$ [kN]	Ut_s [%]	Ut_{ts} [%]	Status
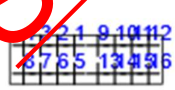	B1	M20 8.8 - 1	LE1	12.8	27.4	9.1	185.0	29.1	35.6	OK
	B2	M20 8.8 - 1	LE1	5.2	28.2	3.7	205.4	30.0	32.7	OK
	B3	M20 8.8 - 1	LE1	1.6	29.1	1.1	205.4	30.9	31.7	OK
	B4	M20 8.8 - 1	LE1	5.3	31.0	3.8	205.4	32.9	35.6	OK
	B5	M20 8.8 - 1	LE1	12.8	27.4	9.0	185.0	29.1	35.6	OK
	B6	M20 8.8 - 1	LE1	5.2	28.2	3.7	205.4	30.0	32.7	OK
	B7	M20 8.8 - 1	LE1	1.6	29.1	1.1	205.4	30.9	31.7	OK
	B8	M20 8.8 - 1	LE1	5.3	31.0	3.8	205.4	32.9	35.6	OK
	B9	M20 8.8 - 1	LE1	8.8	24.9	6.2	185.0	26.5	30.9	OK
	B10	M20 8.8 - 1	LE1	3.7	27.6	2.6	205.4	29.3	31.2	OK
	B11	M20 8.8 - 1	LE1	1.6	30.0	1.1	205.4	31.9	32.7	OK
	B12	M20 8.8 - 1	LE1	6.9	33.3	4.9	205.4	35.3	38.8	OK
	B13	M20 8.8 - 1	LE1	8.7	24.9	6.1	185.0	26.5	30.9	OK
	B14	M20 8.8 - 1	LE1	3.7	27.6	2.6	205.4	29.3	31.2	OK
	B15	M20 8.8 - 1	LE1	1.6	30.0	1.2	205.4	31.9	32.7	OK
	B16	M20 8.8 - 1	LE1	6.9	33.3	4.9	205.4	35.3	38.8	OK

	B17	M20 8.8 - 1	LE1	13.1	27.2	9.3	205.4	28.9	35.6	OK
	B18	M20 8.8 - 1	LE1	3.1	28.1	2.2	205.4	29.9	31.5	OK
	B19	M20 8.8 - 1	LE1	1.3	29.2	0.9	205.4	31.1	31.8	OK
	B20	M20 8.8 - 1	LE1	1.2	31.5	0.9	244.2	33.5	34.1	OK
	B21	M20 8.8 - 1	LE1	13.0	27.2	9.2	205.4	28.9	35.5	OK
	B22	M20 8.8 - 1	LE1	3.1	28.1	2.2	205.4	29.9	31.4	OK
	B23	M20 8.8 - 1	LE1	1.3	29.2	0.9	205.4	31.1	31.8	OK
	B24	M20 8.8 - 1	LE1	1.2	31.5	0.9	244.2	33.5	34.1	OK
	B25	M20 8.8 - 1	LE1	12.2	24.7	8.7	205.4	26.2	32.4	OK
	B26	M20 8.8 - 1	LE1	2.4	27.3	1.7	205.4	29.0	30.2	OK
	B27	M20 8.8 - 1	LE1	1.5	30.1	1.1	205.4	32.0	32.8	OK
	B28	M20 8.8 - 1	LE1	1.3	34.0	0.9	244.2	36.2	36.8	OK
	B29	M20 8.8 - 1	LE1	12.3	24.7	8.7	205.4	26.2	32.5	OK
	B30	M20 8.8 - 1	LE1	2.4	27.3	1.7	205.4	29.0	30.2	OK
	B31	M20 8.8 - 1	LE1	1.5	30.1	1.1	205.4	32.0	32.8	OK
	B32	M20 8.8 - 1	LE1	1.3	34.0	0.9	244.2	36.2	36.8	OK
	B33	M16 8.8 - 2	LE1	0.5	5.2	0.6	129.3	8.7	9.1	OK
	B34	M16 8.8 - 2	LE1	0.1	2.7	0.1	129.3	4.5	4.5	OK
	B35	M16 8.8 - 2	LE1	0.2	7.2	0.2	129.3	11.9	12.1	OK
	B36	M16 8.8 - 2	LE1	0.2	4.9	0.2	129.3	8.1	8.2	OK
	B37	M16 8.8 - 2	LE1	0.3	2.2	0.3	129.3	3.7	3.9	OK
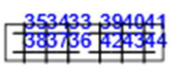	B38	M16 8.8 - 2	LE1	0.9	7.0	1.0	129.3	11.6	12.3	OK
	B39	M16 8.8 - 2	LE1	1.3	11.7	1.4	129.3	19.4	20.4	OK
	B40	M16 8.8 - 2	LE1	0.4	5.5	0.4	129.3	9.2	9.5	OK
	B41	M16 8.8 - 2	LE1	0.4	10.0	0.5	129.3	16.5	16.9	OK
	B42	M16 8.8 - 2	LE1	0.4	11.7	0.5	129.3	19.4	19.7	OK
	B43	M16 8.8 - 2	LE1	0.2	5.0	0.2	129.3	8.3	8.5	OK
	B44	M16 8.8 - 2	LE1	0.9	9.3	1.0	129.3	15.5	16.2	OK
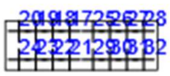
Design data

Name	$F_{t,Rd}$ [kN]	$B_{p,Rd}$ [kN]	$F_{v,Rd}$ [kN]
M20 8.8 - 1	141.1	326.8	94.1
M16 8.8 - 2	90.4	243.2	60.3

Detailed result for B12

Tension resistance check (EN 1993-1-8 tab 3.4)

$$F_{t,Rd} = \frac{k_2 f_{ub} A_s}{\gamma_{M2}} = 141.1 \text{ kN} \geq F_t = 6.9 \text{ kN}$$

where:

$k_2 = 0.90$ – Factor

$f_{ub} = 800.0$ MPa – Ultimate tensile strength of the bolt

$A_s = 245$ mm^2 – Tensile stress area of the bolt

02 TOWERFIELDS WESTERHAM ROAD
BROMLEY, BR2 6HF
Email: info@Pearlepp.co.uk
Website: www. pearlepp.co.uk
Tel no. 02035763199

γ_{M2} = 1.25 – Safety factor

Punching resistance check (EN 1993-1-8 tab 3.4)

$B_{p,Rd} = \frac{0.6\pi d_m t_p f_u}{\gamma_{M2}} =$ 326.8 kN ≥ $F_t =$ 6.9 kN

where:

d_m = 32 mm – The mean of the across points and across flats dimensions of the bolt head or the nut, whichever is smaller

t_p = 16 mm – Thickness

f_u = 430.0 MPa – Ultimate strength

γ_{M2} = 1.25 – Safety factor

Shear resistance check (EN 1993-1-8 tab 3.4)

$F_{v,Rd} = \frac{\beta_p \alpha_v f_{ub} A}{\gamma_{M2}} =$ 94.1 kN ≥ $V =$ 33.3 kN

where:

β_p = 1.00 – Reducing factor

α_v = 0.60 – Reducing factor

f_{ub} = 800.0 MPa – Ultimate tensile strength of the bolt

A = 245 mm^2 – Tensile stress area of the bolt

γ_{M2} = 1.25 – Safety factor

Bearing resistance check (EN 1993-1-8 tab 3.4)

$F_{b,Rd} = \frac{k_1 \alpha_b f_u d t}{\gamma_{M2}} =$ 205.4 kN ≥ $V =$ 55.2 kN

where:

$k_1 = \min(2.8\frac{e_2}{d_0} - 1.7, 1.4\frac{p_2}{d_0} - 1.7, 2.5) =$ 2.50 – Factor for edge distance and bolt spacing perpendicular to the direction of load transfer

$\alpha_b = \min(\frac{e_1}{3d_0}, \frac{p_1}{3d_0} - \frac{1}{4}, \frac{f_{ub}}{f_u}, 1) =$ 0.84 – Factor for end distance and bolt spacing in direction of load transfer

e_2 = 43 mm – Distance to the plate edge perpendicular to the shear force

p_2 = 120 mm – Distance between bolts perpendicular to the shear force

d_0 = 22 mm – Bolt hole diameter

e_1 = 266 mm – Distance to the plate edge in the direction of the shear force

p_1 = 72 mm – Distance between bolts in the direction of the shear force

f_{ub} = 800.0 MPa – Ultimate tensile strength of the bolt

f_u = 430.0 MPa – Ultimate strength

d = 20 mm – Nominal diameter of the fastener

$t =$ 14 mm – Thickness of the plate

$\gamma_{M2} =$ 1.25 – Safety factor

Interaction of tension and shear (EN 1993-1-8 tab 3.4)

$$U_{tts} = \frac{F_{v,Ed}}{F_{v,Rd}} + \frac{F_{t,Ed}}{1.4F_{t,Rd}} = \quad 38.8 \quad \%$$

Utilization in tension

$$U_{tt} = \frac{F_{t,Ed}}{\min(F_{t,Rd};B_{p,Rd})} = \quad 4.9 \quad \%$$

Utilization in shear

$$U_{ts} = \frac{V_{Ed}}{\min(F_{v,Rd};F_{b,Rd})} = \quad 35.3 \quad \%$$

Buckling

Loads	Shape	Factor [-]
LE1	1	16.46
	2	20.29
	3	26.34
	4	27.86
	5	33.0[illegible]
	6	34.74

Bill of material

Manufacturing operations

Name	Plates [mm]	Shape	Nr.	Welds [mm]	Length [mm]	Bolts	Nr.
SPL1	P20.0x650.0-205.8 (S 275)	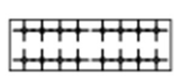	1			M20 8.8	16
	P16.0x650.0-96.2 (S 275)	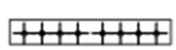	1				

	P16.0x650.0-96.2 (S 275)	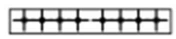	1					
SPL2	P20.0x650.0-205.8 (S 275)		1				M20 8.8	16
	P16.0x650.0-96.2 (S 275)	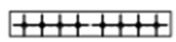	1					
	P16.0x650.0-96.2 (S 275)		1					
SPL3	P15.0x500.0-115.4 (S 275)	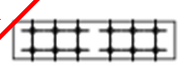	1				M16 8.8	12
	P15.0x500.0-115.4 (S 275)	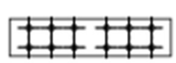	1					

Bolts

Name	Grip length [mm]	Count
M20 8.8	50	32
M16 8.8	39	12

PEPP PEARL ENGINEERS, PLANNERS & PROJECT MANAGERS 02 TOWERFIELDS WESTERHAM ROAD BROMLEY, BR2 6HF Email: info@Pearlepp.co.uk Website: www. pearlepp.co.uk Tel no. 02035763199	**Project:** 68 GROVE PARK RD UK		**Sheet No./Rev.** 649
	Job Ref. 2024-06-	**Structural Engineer** **MM**	**Date** **11/06/2024**

Drawing

SPL1 - SPL1a

P20.0x206-650 (S 275)

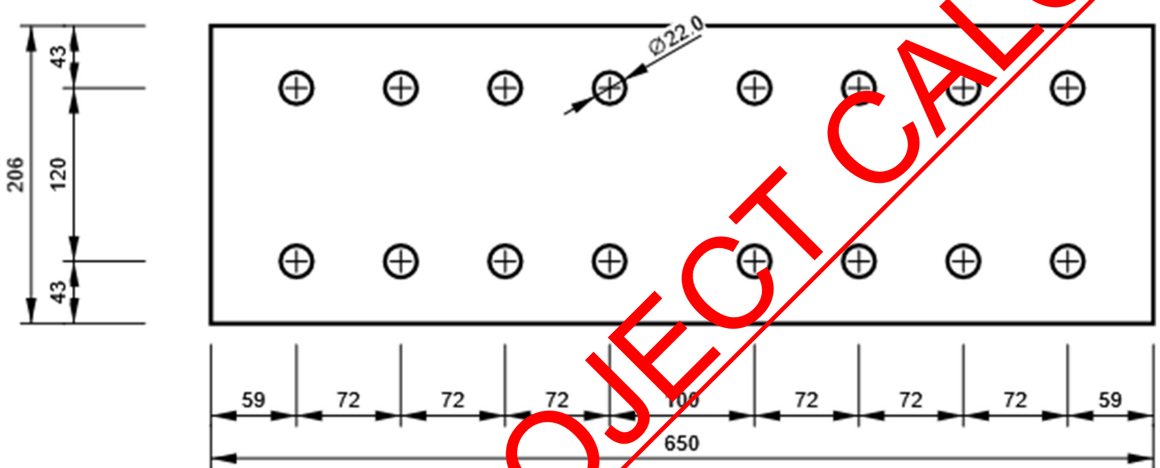

SPL1 - SPL1b

P16.0x96-650 (S 275)

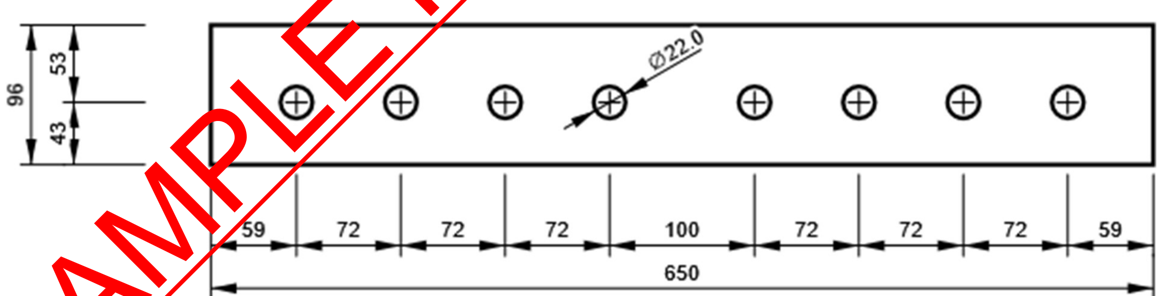

PEARL ENGINEERS, PLANNERS & PROJECT MANAGERS 02 TOWERFIELDS WESTERHAM ROAD BROMLEY, BR2 6HF Email: info@Pearlepp.co.uk Website: www. pearlepp.co.uk Tel no. 02035763199	**Project:** 68 GROVE PARK RD UK		**Sheet No./Rev.** 650
	Job Ref. 2024-06-	**Structural Engineer** **MM**	**Date** **11/06/2024**

SPL1 - SPL1c

P16.0x96-650 (S 275)

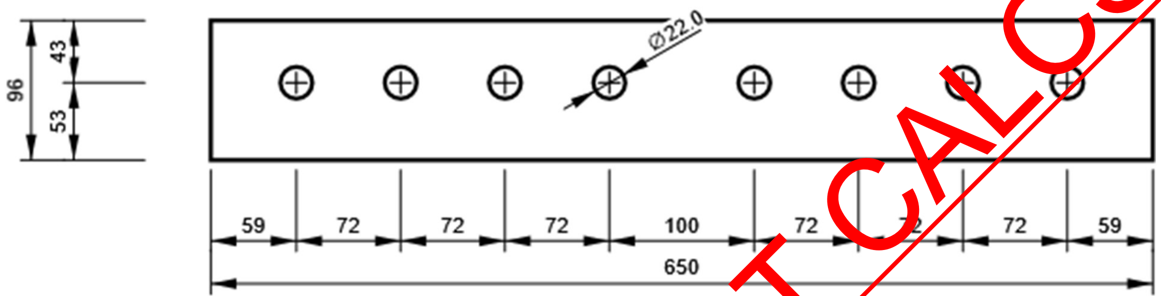

SPL2 - SPL2a

P20.0x206-650 (S 275)

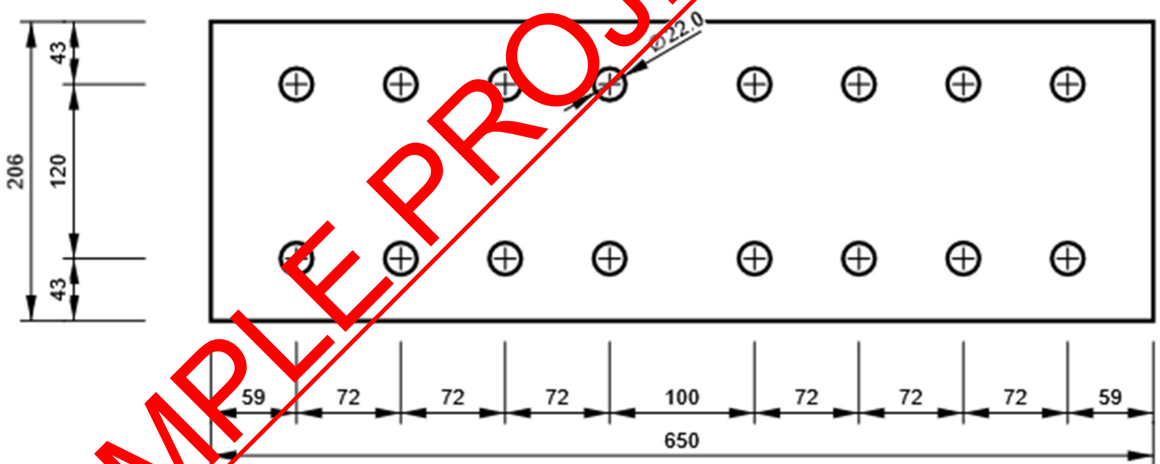

PEPP PEARL ENGINEERS, PLANNERS & PROJECT MANAGERS 02 TOWERFIELDS WESTERHAM ROAD BROMLEY, BR2 6HF Email: info@Pearlepp.co.uk Website: www. pearlepp.co.uk Tel no. 02035763199	**Project:** 68 GROVE PARK RD UK		**Sheet No./Rev.** 651
	Job Ref. 2024-06-	**Structural Engineer** **MM**	**Date** **11/06/2024**

SPL2 - SPL2b

P16.0x96-650 (S 275)

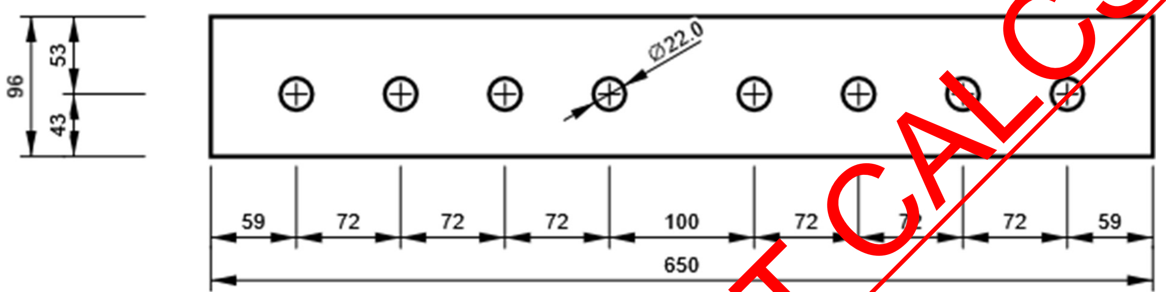

SPL2 - SPL2c

P16.0x96-650 (S 275)

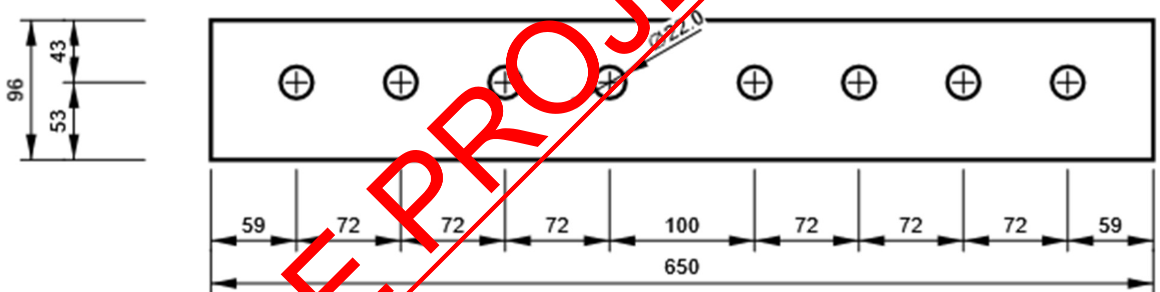

SPL3 - SPL3a

P15.0x115-500 (S 275)

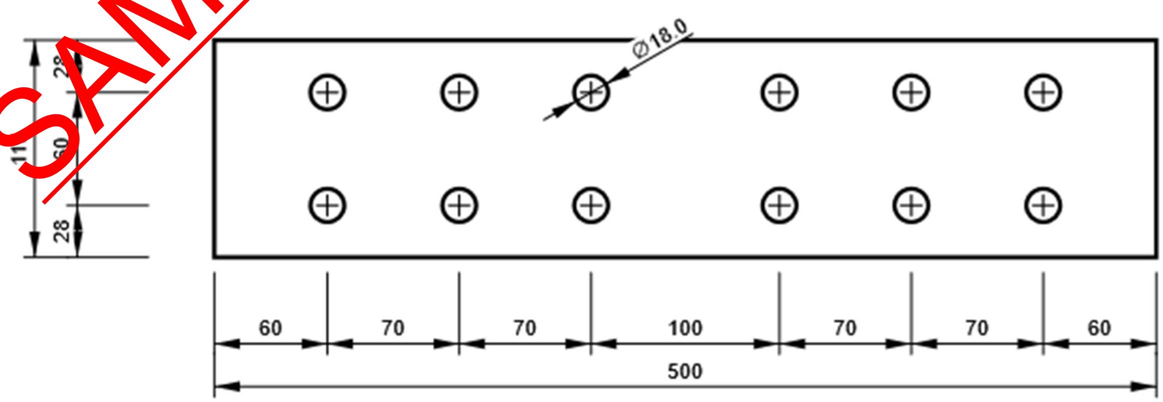

SPL3 - SPL3b

P15.0x115-500 (S 275)

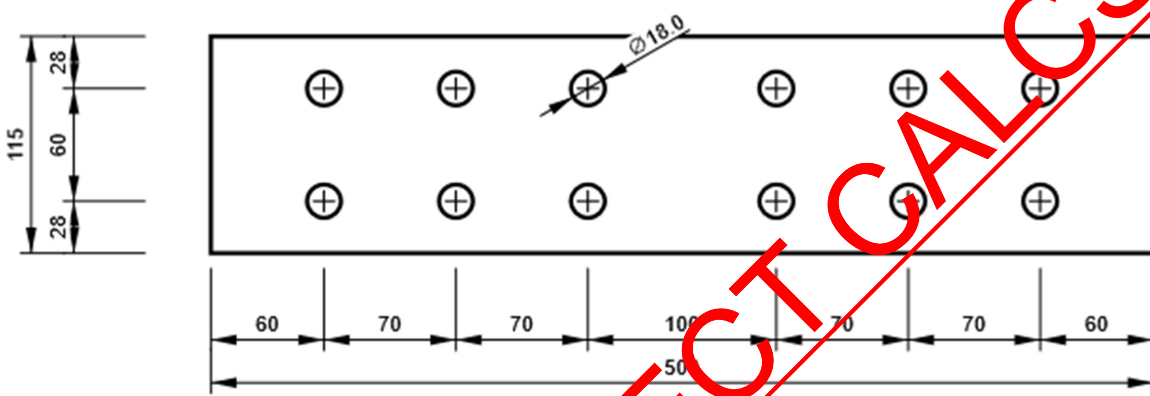

B1, UC 203 x 203 x 60 - Bottom flange 1:

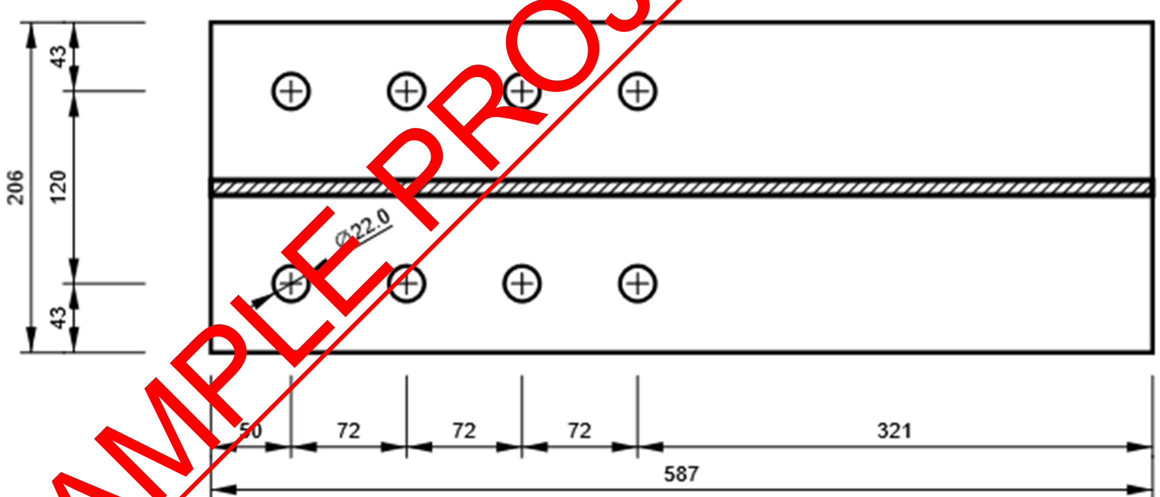

PEPP — PEARL ENGINEERS, PLANNERS & PROJECT MANAGERS 02 TOWERFIELDS WESTERHAM ROAD BROMLEY, BR2 6HF Email: info@Pearlepp.co.uk Website: www. pearlepp.co.uk Tel no. 02035763199	**Project:** 68 GROVE PARK RD UK		**Sheet No./Rev.** 653
	Job Ref. 2024-06-	**Structural Engineer** **MM**	**Date** **11/06/2024**

B1, UC 203 x 203 x 60 - Top flange 1:

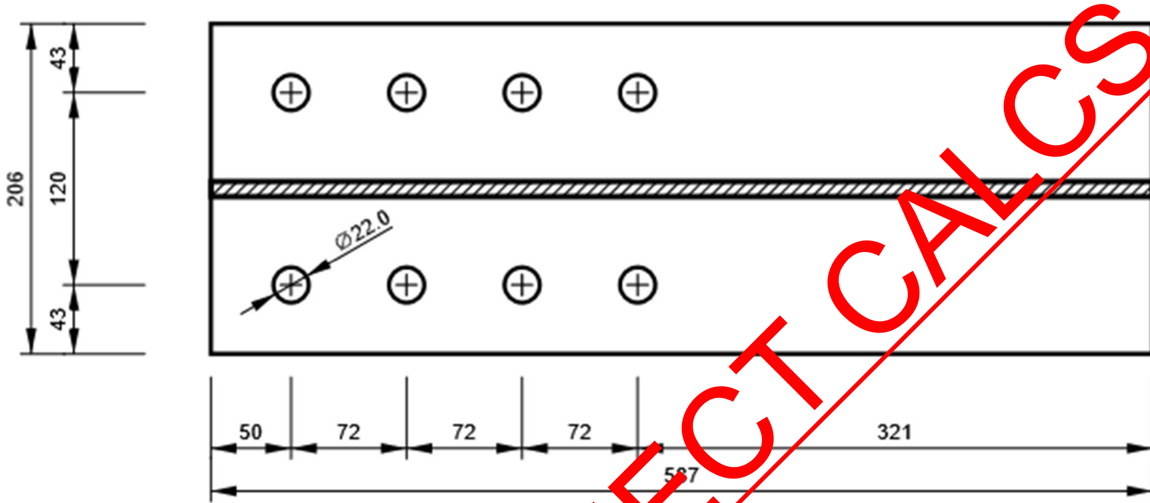

B1, UC 203 x 203 x 60 - Web 1:

B2, UC 203 x 203 x 60 - Bottom flange 1:

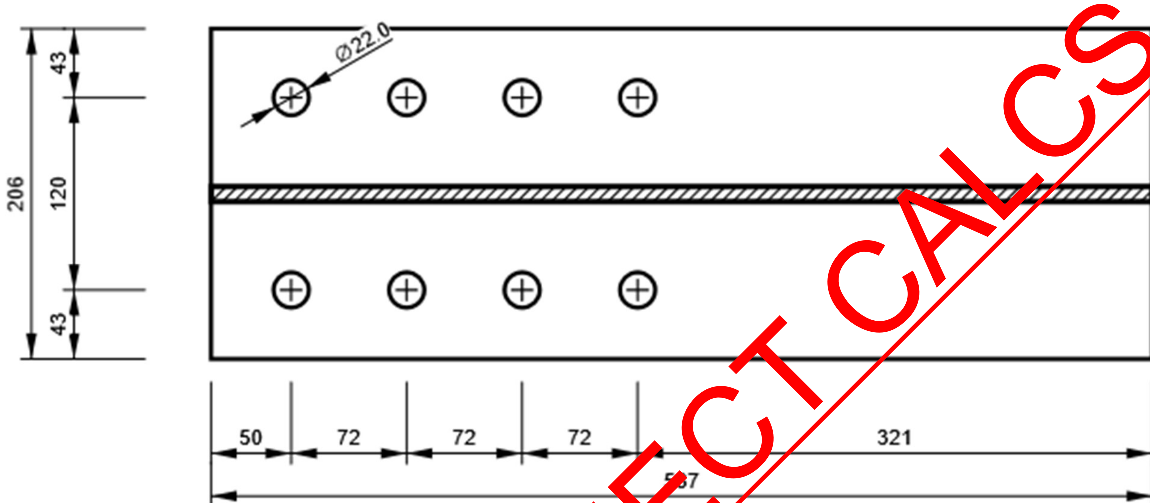

B2, UC 203 x 203 x 60 - Top flange 1:

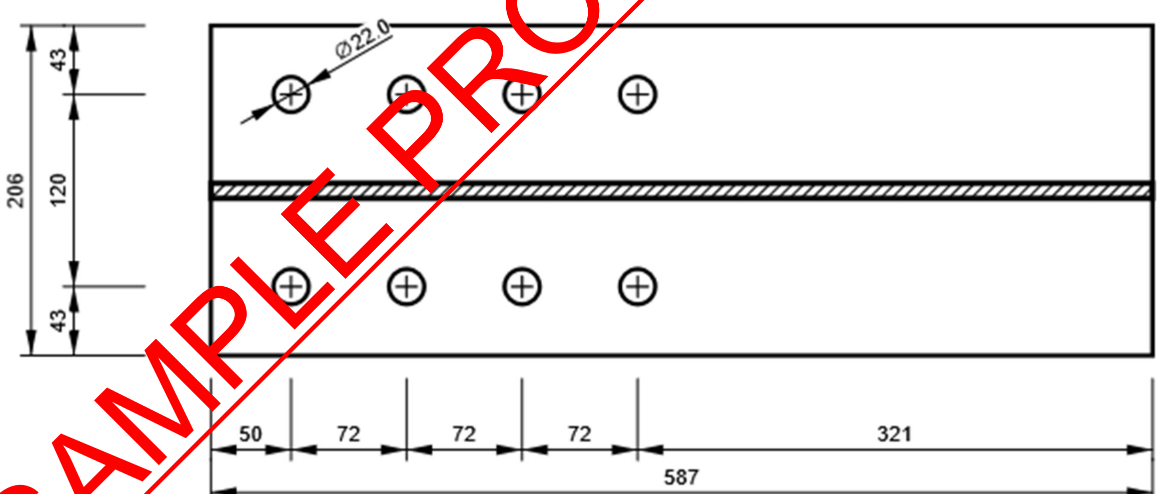

PEPP — PEARL ENGINEERS, PLANNERS & PROJECT MANAGERS	**Project:** 68 GROVE PARK RD UK		**Sheet No./Rev.** 655
02 TOWERFIELDS WESTERHAM ROAD BROMLEY, BR2 6HF Email: info@Pearlepp.co.uk Website: www. pearlepp.co.uk Tel no. 02035763199	**Job Ref. 2024-06-**	**Structural Engineer** **MM**	**Date** **11/06/2024**

B2, UC 203 x 203 x 60 - Web 1:

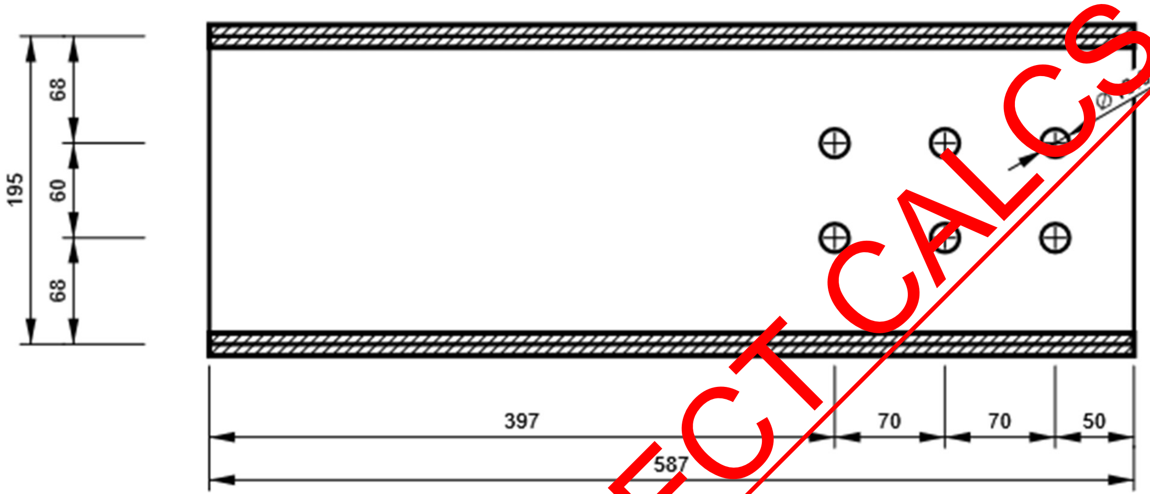

4. TIMBER DESIGN

- **Flat Roof Rafter** 47 x 175 @ 400 c/c (C-24)

5. MASNORY DESIGN

- **Cavity Wall**

MASONRY WALL PANEL DESIGN

In accordance with BS5628-1:2005

Masonry panel details

Unreinforced masonry wall without openings

Panel length; L = **3000** mm

Panel height; h = **2400** mm

Panel support conditions

Outer leaf; **All edges supported, bottom, right and left continuous**

Inner leaf; **All edges supported, bottom, right and left continuous**

Effective panel length; $L_{ef} = 1.0 \times L$ = **3000** mm

Effective panel height; $h_{ef} = 1.0 \times h$ = **2400** mm

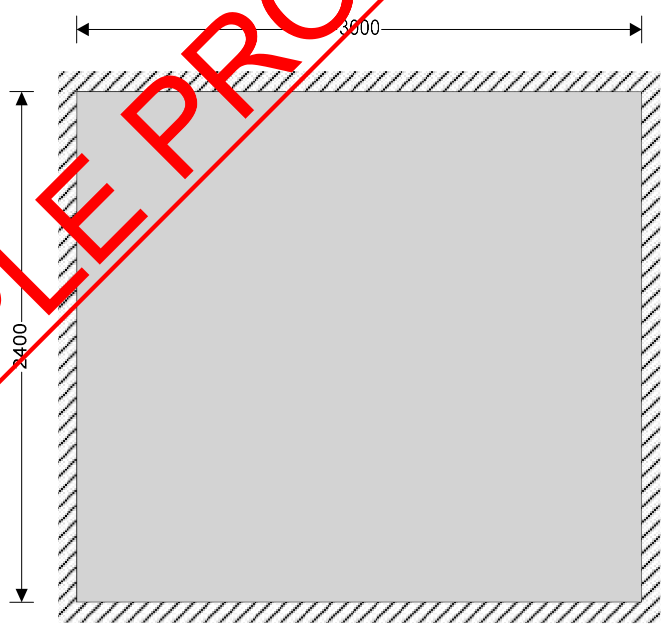

Cavity wall construction details

Outer leaf thickness; t_1 = **100** mm

Cavity thickness; t_c = **150** mm

Inner leaf thickness; t_2 = **100** mm

Effective wall thickness; $t_{ef} = \max(2 \times (t_1 + t_2) / 3, t_1, t_2) =$ **133** mm

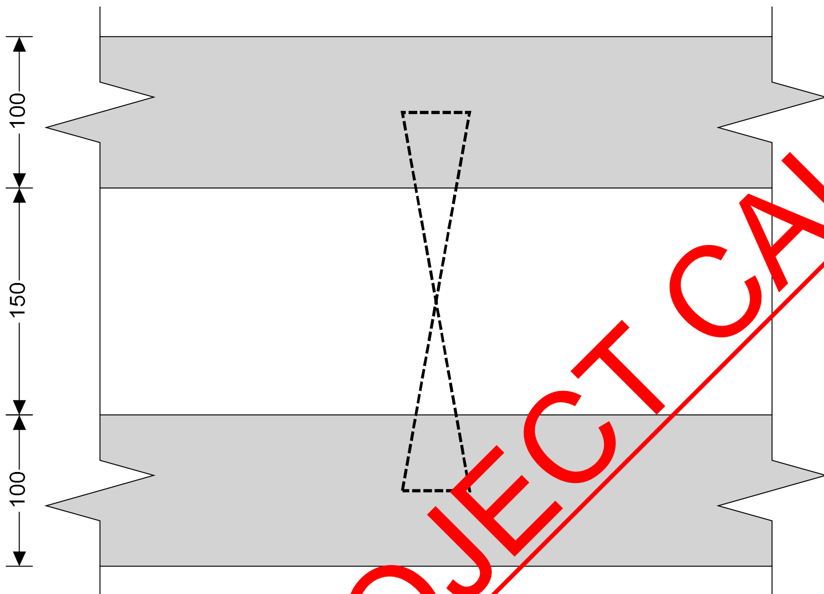

Masonry outer leaf details

Masonry type; **Clay bricks having a water absorption between 7% and 12%**

Compressive strength of unit; p_{unit1} = **10.0** N/mm^2

Mortar strength Class/Designation; **M6 / (ii)**;

Height of masonry units; h_{b1} = **65** mm

Density of masonry; γ_1 = **18.0** kN/m^3

From BS5628-1 Table 2a - Characteristic compressive strength of masonry

Characteristic compressive strength; f_{k1} = **3.80** N/mm^2

From BS5628-1 Table 3 - Characteristic flexural strength of masonry

Plane of failure parallel to bed joints; f_{kx_para1} = **0.40** N/mm^2

Plane of failure perpendicular to bed joints; f_{kx_perp1} = **1.10** N/mm^2

Masonry inner leaf details

Masonry type; **Aggregate concrete blocks with no voids**

Compressive strength of unit; p_{unit2} = **7.3** N/mm^2

Mortar strength Class/Designation; **M6 / (ii)**;

Height of masonry units; h_{b2} = **215** mm

Density of masonry; γ_2 = **18.0** kN/m^3

Least horizontal dimension of masonry units; t_{min2} = **100** mm

Ratio of height to least horizontal dimension; h_{b2} / t_{min2} = **2.15**

From BS5628-1 Table 2d - Characteristic compressive strength of masonry

Characteristic compressive strength; f_{k2} = **6.40** N/mm^2

From BS5628-1 Table 3 - Characteristic flexural strength of masonry

Plane of failure parallel to bed joints; f_{kx_para2} = **0.25** N/mm^2

Plane of failure perpendicular to bed joints; f_{kx_perp2} = **0.60** N/mm^2

Lateral loading details

Characteristic wind load on panel; W_k = **0.700** kN/m^2

Vertical loading details

Dead load on top of inner leaf; G_{k2} = **20** kN/m;

Imposed load on top of inner leaf; Q_{k2} = **10** kN/m;

Partial safety factors for material strength

Category of manufacturing control; **Category II**

Category of construction control; **Normal**

Partial safety factor for masonry in compression; γ_{mc} = **3.50**

Partial safety factor for masonry in flexure; γ_{mf} = **3.00**

Partial safety factor for masonry in shear; γ_{mv} = **2.50**

Slenderness ratio (cl 24.1)

Allowable slenderness ratio; SR_{all} = **27**

Slenderness ratio; $SR = \min(h_{ef}, L_{ef}) / t_{ef}$ = **18.0**

PASS - Slenderness ratio is less than maximum allowable

<u>Vertical loading (cl 28)</u>

Partial safety factors for design loads

Partial safety factor for design dead load; γ_{fG} = **1.40**

Partial safety factor for design imposed load; γ_{fQ} = **1.60**

Considering inner leaf at top of wall

Design vertical load on wall; $F_{v2} = G_{k2} \times \gamma_{fG} + Q_{k2} \times \gamma_{fQ}$ = **44.0** kN/m

Design vertical load stress on wall; $f_{v2} = F_{v2} / t_2$ = **0.440** N/mm^2

Design bending moment; $M_{v2} = G_{k2} \times \gamma_{fG} \times e_{G2} + Q_{k2} \times \gamma_{fQ} \times e_{Q2}$ = **0.0** kNm/m

Resultant eccentricity at the top of the wall; $e_{x2} = M_{v2} / F_{v2}$ = **0** mm

From BS5628-1 Table 7 - Capacity reduction factor

Capacity reduction factor; β_2 = **0.84**

Allowable stress capacity; $f_{cap2} = \beta_2 \times f_{k2} / \gamma_{mc}$= **1.529** N/mm^2

PASS - Allowable stress capacity exceeds design vertical load stress on wall

<u>Horizontal loading (cl 32)</u>

Limiting dimensions (cl 32.3)

Area of panel; $A_p = h \times L$ = **7.2** m^2

Limiting area of panel; $A_{max} = 2250 \times t_{ef}^2$ = **40.0** m^2

PASS - Area of panel does not exceed limiting area of panel

Limiting panel dimension; $L_{max} = 50 \times t_{ef}$ = **6667** mm

PASS - Limiting panel dimension is not exceeded

Partial safety factors for design loads

Partial safety factor for design wind load; γ_{fW} = **1.40**

Partial safety factor for design dead load; γ_{fG} = **0.90**

<u>Design moments of resistance in panels (cl 32.4.2)</u>

Considering outer leaf

Design vertical compressive stress; $g_{d1} = \gamma_{fG} \times G_{k1} / t_1 =$ **0.00** N/mm^2

Enhanced flexural strength of masonry; $f_{ka\_para1} = f_{kx\_para1} + \gamma_{mf} \times g_{d1} =$ **0.40** N/mm^2

Section modulus of wall; $Z_1 = t_1^2 / 6 =$ **1666667** mm^3/m

Elastic design moment of resistance; $M_{d1} = f_{kx\_perp1} \times Z_1 / \gamma_{mf} =$ **0.611** kNm/m

Considering inner leaf

Design vertical compressive stress; $g_{d2} = \gamma_{fG} \times G_{k2} / t_2 =$ **0.18** N/mm^2

Enhanced flexural strength of masonry; $f_{ka\_para2} = f_{kx\_para2} + \gamma_{mf} \times g_{d2} =$ **0.79** N/mm^2

Section modulus of wall; $Z_2 = t_2^2 / 6 =$ **1666667** mm^3/m

Elastic design moment of resistance; $M_{d2} = f_{kx\_perp2} \times Z_2 / \gamma_{mf} =$ **0.333** kNm/m

Calculate design wind load acting on each leaf

Outer leaf design wind load; $W_{k1} = M_{d1} \times W_k / (M_{d1} + M_{d2}) =$ **0.453** kN/m^2

Inner leaf design wind load; $W_{k2} = M_{d2} \times W_k / (M_{d1} + M_{d2}) =$ **0.247** kN/m^2

<u>Design moment in panels (cl 32.4.2)</u>

Considering outer leaf

Orthogonal strength ratio; $\mu_1 = f_{ka\_para1} / f_{kx\_perp1} =$ **0.36**

Using yield line analysis to calculate bending moment coefficient

Bending moment coefficient; $\alpha_1 =$ **0.036**

Design moment in wall; $M_1 = \alpha_1 \times W_{k1} \times \gamma_{fW} \times L^2 =$ **0.206** kNm/m

PASS - Resistance moment exceeds design moment

Considering inner leaf

Orthogonal strength ratio; $\mu_2 = f_{ka\_para2} / f_{kx\_perp2} =$ **1.32**

Using yield line analysis to calculate bending moment coefficient

Bending moment coefficient; $\alpha_2 =$ **0.019**

Design moment in wall; $M_2 = \alpha_2 \times W_{k2} \times \gamma_{fW} \times L^2 =$ **0.059** kNm/m

PASS - Resistance moment exceeds design moment

6. PADSTONE DESIGN

- **PS-1** 440 x 102 x 215

MASONRY BEARING DESIGN TO BS5628-1:2005

Masonry details

Masonry type; **Aggregate concrete blocks (25% or less formed voids)**

Compressive strength of unit; p_{unit} = **3.6** N/mm^2

Mortar designation; **ii**

Least horizontal dimension of masonry units; l_{unit} = **100** mm

Height of masonry units; h_{unit} = **215** mm

Category of masonry units; **Category II**

Category of construction control ; **Normal**

Partial safety factor for material strength; γ_m = **3.5**

Thickness of load bearing leaf; t = **100** mm

Effective thickness of masonry wall; t_{ef} = **100** mm

Height of masonry wall; h = **2400** mm

Effective height of masonry wall; h_{ef} = **2400** mm

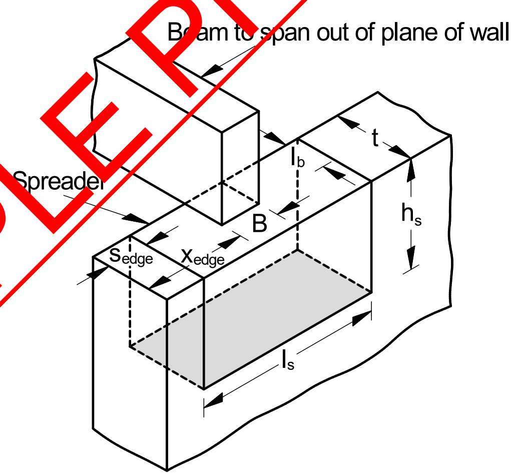

Bearing details

Beam spanning out of plane of wall

Width of bearing; B = **100** mm

Length of bearing; l_b = **100** mm

Edge distance; x_{edge} = **0** mm

Compressive strength from Table 2 BS5628:Part 1 - aggregate concrete blocks (25% or less formed voids)

Mortar designation; Mortar = **"ii"**

Block compressive strength; p_{unit} = **3.6** N/mm^2

Characteristic compressive strength (Table 2c); f_{kc} = **1.70** N/mm^2

Characteristic compressive strength (Table 2d); f_{kd} = **3.50** N/mm^2

Height of solid block; h_{unit} = **215.0** mm ;

Least horizontal dimension; l_{unit} = **100.0** mm

Block ratio; ratio = h_{unit} / l_{unit} = **2.2**

Ratio between 0.6 and 4.5 - OK

Characteristic compressive strength; f_k = **3.50** N/mm^2

Loading details

Characteristic concentrated dead load; G_k = **5** kN

Characteristic concentrated imposed load; Q_k = **5** kN

Design concentrated load; F = ($G_k \times$ 1.4) + ($Q_k \times$ 1.6) = **15.0** kN

Characteristic distributed dead load; g_k = **0.0** kN/m

Characteristic distributed imposed load; q_k = **0.0** kN/m

Design distributed load; f = ($g_k \times$ 1.4) + ($q_k \times$ 1.6) = **0.0** kN/m

Masonry bearing type

Bearing type; **Type 1**

Bearing safety factor; γ_{bear} = **1.25**

Check design bearing without a spreader

Design bearing stress; f_{ca} = F / (B $\times$ l_b) + f / t = **1.500** N/mm^2

Allowable bearing stress; f_{cp} = $\gamma_{bear} \times f_k / \gamma_m$ = **1.250** N/mm^2

FAIL - Design bearing stress exceeds allowable bearing stress, use a spreader

Spreader details

Length of spreader; l_s = **440** mm

Depth of spreader; h_s = **215** mm

Edge distance; s_{edge} = max(0 mm, x_{edge} – (l_s - B) / 2) = **0** mm

Spreader bearing type

Bearing type; **Type 3**

Bearing safety factor; γ_{bear} = **2.00**

Check design bearing with a spreader

Loading acts eccentrically outside middle third – triangular stress distribution

Offset distance; x_{off} = x_{edge} + (B / 2) = **50** mm

Maximum bearing stress; f_{ca} = 2 $\times$ F / (3 $\times$ x_{off} $\times$ t) + f / t = **2.000** N/mm^2

Allowable bearing stress; f_{cp} = $\gamma_{bear} \times f_k / \gamma_m$ = **2.000** N/mm^2

PASS - Allowable bearing stress exceeds design bearing stress

Check design bearing at 0.4 × h below the bearing level

Slenderness ratio; h_{ef} / t_{ef} = **24.00**

Eccentricity at top of wall; e_x = **0.0** mm

From BS5628:1 Table 7

Capacity reduction factor; β = **0.61**

Length of bearing distributed at 0.4 × h; l_d = **1060** mm

Maximum bearing stress; $f_{ca} = F / (l_d \times t) + f / t$ = **0.142** N/mm^2

Allowable bearing stress; $f_{cp} = \beta \times f_k / \gamma_m$ = **0.605** N/mm^2

PASS - Allowable bearing stress at 0.4 ´ h below bearing level exceeds design bearing stress

02 TOWERFIELDS WESTERHAM ROAD BROMLEY, BR2 6HF Email: info@Pearlepp.co.uk Website: www. pearlepp.co.uk Tel no. 02035763199	**Project:** 68 GROVE PARK RD UK		**Sheet No./Rev.** 664
	Job Ref. 2024-06-	**Structural Engineer** **MM**	**Date** **11/06/2024**

- **PS-2** 440 x 102 x 215

MASONRY BEARING DESIGN TO BS5628-1:2005

Masonry details

Masonry type; **Aggregate concrete blocks (25% or less formed voids)**

Compressive strength of unit; p_{unit} = **3.6** N/mm^2

Mortar designation; **ii**

Least horizontal dimension of masonry units; l_{unit} = **100** mm

Height of masonry units; h_{unit} = **215** mm

Category of masonry units; **Category II**

Category of construction control ; **Normal**

Partial safety factor for material strength; γ_m = **3.5**

Thickness of load bearing leaf; t = **100** mm

Effective thickness of masonry wall; t_{ef} = **100** mm

Height of masonry wall; h = **2400** mm

Effective height of masonry wall; h_{ef} = **2400** mm

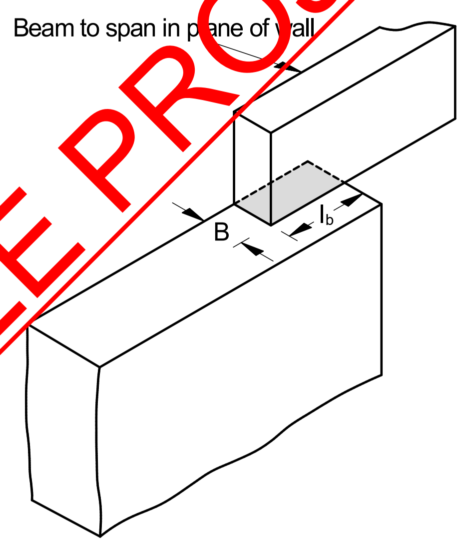

Bearing details

Beam spanning in plane of wall

Width of bearing; B = **100** mm

Length of bearing; l_b = **100** mm

Compressive strength from Table 2 BS5628:Part 1 - aggregate concrete blocks (25% or less formed voids)

Mortar designation; Mortar = **"ii"**

Block compressive strength; p_{unit} = **3.6** N/mm²

Characteristic compressive strength (Table 2c); f_{kc} = **1.70** N/mm²

Characteristic compressive strength (Table 2d); f_{kd} = **3.50** N/mm²

Height of solid block; h_{unit} = **215.0** mm ;

Least horizontal dimension; l_{unit} = **100.0** mm

Block ratio; ratio = h_{unit} / l_{unit} = **2.2**

Ratio between 0.6 and 4.5 - OK

Characteristic compressive strength; f_k = **3.50** N/mm²

Loading details

Characteristic concentrated dead load; G_k = **5** kN

Characteristic concentrated imposed load; Q_k = **5** kN

Design concentrated load; F = ($G_k \times$ 1.4) + ($Q_k \times$ 1.6) = **15.0** kN

Characteristic distributed dead load; g_k = **0.0** kN/m

Characteristic distributed imposed load; q_k = **0.0** kN/m

Design distributed load; f = ($g_k \times$ 1.4) + ($q_k \times$ 1.6) = **0.0** kN/m

Masonry bearing type

Bearing type; **Type 2**

Bearing safety factor; γ_{bear} = **1.50**

Check design bearing without a spreader

Design bearing stress; f_{ca} = F / (B $\times$ l_b) + f / t = **1.500** N/mm²

Allowable bearing stress; f_{cp} = $\gamma_{bear} \times f_k / \gamma_m$ = **1.500** N/mm²

PASS - Allowable bearing stress exceeds design bearing stress

Check design bearing at 0.4 × h below the bearing level

Slenderness ratio; h_{ef} / t_{ef} = **24.00**

Eccentricity at top of wall; e_x = **0.0** mm

From BS5628:1 Table 7

Capacity reduction factor; β = **0.61**

Length of bearing distributed at 0.4 × h; l_d = **1060** mm

Maximum bearing stress; f_{ca} = F / ($l_d \times$ t) + f / t = **0.142** N/mm²

Allowable bearing stress; f_{cp} = $\beta \times f_k / \gamma_m$ = **0.605** N/mm²

PASS - Allowable bearing stress at 0.4 ´ h below bearing level exceeds design bearing stress

7. FOUNDATION DESIGN

- **Isolated Concrete Pad Footing 1**

PAD FOOTING ANALYSIS AND DESIGN (BS8110-1:1997)

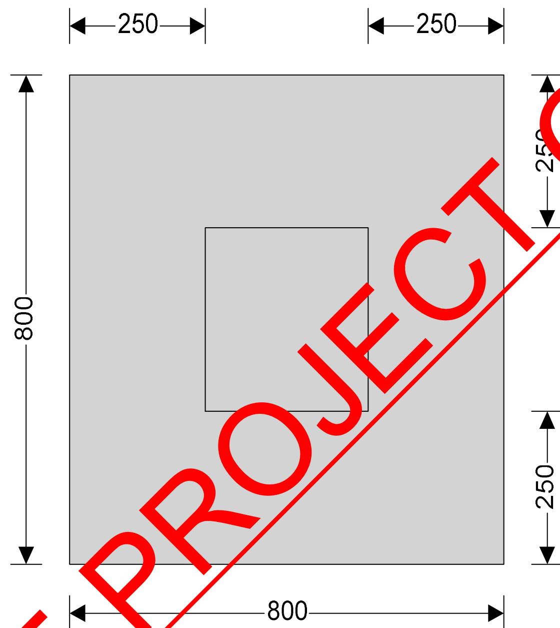

Pad footing details

Length of pad footing;	L = **800** mm
Width of pad footing;	B = **800** mm
Area of pad footing;	A = L × B = **0.640** m^2
Depth of pad footing;	h = **1000** mm
Depth of soil over pad footing;	h_{soil} = **0** mm
Density of concrete;	ρ_{conc} = **23.6** kN/m^3

Column details

Column base length;	l_A = **300** mm
Column base width;	b_A = **300** mm
Column eccentricity in x;	e_{PxA} = **0** mm
Column eccentricity in y;	e_{PyA} = **0** mm

Soil details

Density of soil;	ρ_{soil} = **20.0** kN/m^3
Design shear strength;	ϕ' = **25.0** deg
Design base friction;	δ = **19.3** deg
Allowable bearing pressure;	$P_{bearing}$ = **100** kN/m^2

Axial loading on column

Dead axial load on column; P_{GA} = **15.0** kN

Imposed axial load on column; P_{QA} = **20.0** kN

Wind axial load on column; P_{WA} = **0.0** kN

Total axial load on column; P_A = **35.0** kN

Foundation loads

Dead surcharge load; F_{Gsur} = **0.000** kN/m^2

Imposed surcharge load; F_{Qsur} = **0.000** kN/m^2

Pad footing self weight; $F_{swt} = h \times \rho_{conc}$ = **23.600** kN/m^2

Soil self weight; $F_{soil} = h_{soil} \times \rho_{soil}$ = **0.000** kN/m^2

Total foundation load; $F = A \times (F_{Gsur} + F_{Qsur} + F_{swt} + F_{soil})$ = **15.1** kN

Calculate pad base reaction

Total base reaction; $T = F + P_A$ = **50.1** kN

Eccentricity of base reaction in x; e_{Tx} = (P_A ´ e_{PxA} + M_{xA} + H_{xA} ´ h) / T = **0** mm

Eccentricity of base reaction in y; e_{Ty} = (P_A ´ e_{PyA} + M_{yA} + H_{yA} ´ h) / T = **0** mm

Check pad base reaction eccentricity

abs(e_{Tx}) / L + abs(e_{Ty}) / B = **0.000**

Base reaction acts within middle third of base

Calculate pad base pressures

q_1 = T / A - 6 ´ T ´ e_{Tx} / (L ´ A) - 6 ´ T ´ e_{Ty} / (B ´ A) = **78.287** kN/m^2

q_2 = T / A - 6 ´ T ´ e_{Tx} / (L ´ A) + 6 ´ T ´ e_{Ty} / (B ´ A) = **78.287** kN/m^2

q_3 = T / A + 6 ´ T ´ e_{Tx} / (L ´ A) - 6 ´ T ´ e_{Ty} / (B ´ A) = **78.287** kN/m^2

q_4 = T / A + 6 ´ T ´ e_{Tx} / (L ´ A) + 6 ´ T ´ e_{Ty} / (B ´ A) = **78.287** kN/m^2

Minimum base pressure; q_{min} = min(q_1, q_2, q_3, q_4) = **78.287** kN/m^2

Maximum base pressure; q_{max} = max(q_1, q_2, q_3, q_4) = **78.287** kN/m^2

PASS - Maximum base pressure is less than allowable bearing pressure

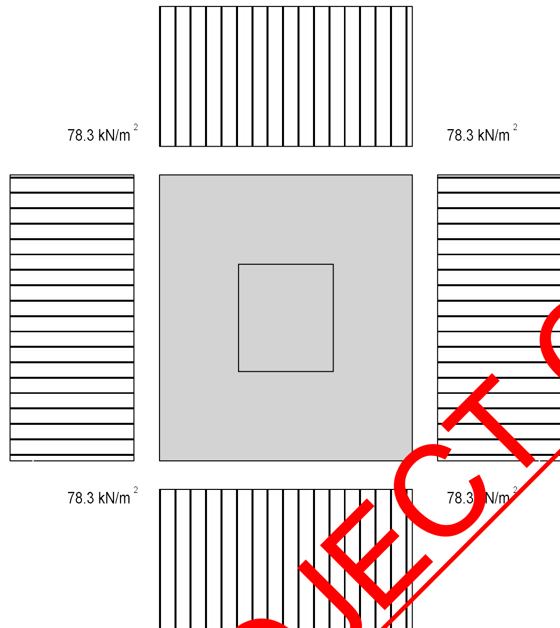

Material details

Characteristic strength of concrete; f_{cu} = **30** N/mm²

Calculate pad lengths in x direction

Left hand length; $L_L = L / 2 + e_{PxA}$ = **400** mm

Right hand length; $L_R = L / 2 - e_{PxA}$ = **400** mm

Calculate rate of change of base pressure in x direction

Length of base reaction; $L_x = L$ = **800** mm

Rate of change of base pressure; $C_x = [(q_1 + q_2) - (q_3 + q_4)] / (2 \times L_x)$ = **0.000** kN/m²/m

Calculate pad lengths in y direction

Top length; $L_T = B / 2 - e_{PyA}$ = **400** mm

Bottom length; $L_B = B / 2 + e_{PyA}$ = **400** mm

Calculate rate of change of base pressure in y direction

Length of base reaction; $L_y = B$ = **800** mm

Rate of change of base pressure; $C_y = [(q_1 + q_3) - (q_2 + q_4)] / (2 \times L_y)$ = **0.000** kN/m²/m

Calculate minimum depth of unreinforced pad footing

Average pressure to left of pad footing; $q_L = (q_1 + q_2) / 2 - C_x$ ´ $(L_L - l_A / 2) / 2$ = **78.287** kN/m²

Minimum depth to left of pad footing; $h_{Lmin} = (L_L - l_A/2)$ ´ max(0.15 ´ $[(q_L/1kN/m^2)^2$ $/(f_{cu}/1N/mm^2)]^{1/4}$,1) = **250** mm

Average pressure to right of pad footing; $q_R = (q_3 + q_4) / 2 - C_x$ ´ $(L_R - l_A / 2) / 2$ = **78.287** kN/m²

Minimum depth to right of pad footing; $h_{Rmin} = (L_R - l_A/2)$ ´ max(0.15 ´ $[(q_R/1kN/m^2)^2$ $/(f_{cu}/1N/mm^2)]^{1/4}$,1) = **250** mm

Average pressure to top of pad footing; $q_T = (q_2 + q_4) / 2 - C_y$ ´ $(L_T - b_A / 2) / 2$ = **78.287** kN/m²

PEPP PEARL ENGINEERS, PLANNERS & PROJECT MANAGERS	**Project:** 68 GROVE PARK RD UK		**Sheet No./Rev.** 669
02 TOWERFIELDS WESTERHAM ROAD BROMLEY, BR2 6HF Email: info@Pearlepp.co.uk Website: www. pearlepp.co.uk Tel no. 02035763199	**Job Ref. 2024-06-**	**Structural Engineer** **MM**	**Date** **11/06/2024**

Minimum depth to top of pad footing; h_{Tmin} = (L_T-b_A/2) ´ max(0.15 ´ [(q_T/1kN/m^2)^2 /(f_{cu}/1N/mm^2)]$^{1/4}$,1) = **250** mm

Average pressure to bottom of pad footing; q_B = (q_1 + q_3) / 2 - C_y ´ (L_B - b_A / 2) / 2 = **78.287** kN/m^2

Minimum depth to bottom of pad footing; h_{Bmin} = (L_B-b_A/2) ´ max(0.15 ´ [(q_B/1kN/m^2)^2 /(f_{cu}/1N/mm^2)]$^{1/4}$,1) = **250** mm

Minimum depth of unreinforced pad footing; h_{min} = max(h_{Lmin}, h_{Rmin}, h_{Tmin}, h_{Bmin}, 300 mm) = **300** mm

PASS - Unreinforced pad footing depth is greater than minimum

- **Isolated Concrete Pad Footing 2**

PAD FOOTING ANALYSIS AND DESIGN (BS8110-1:1997)

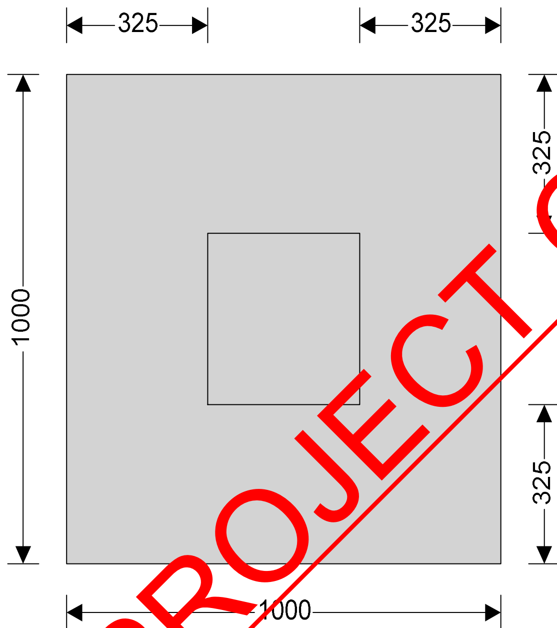

Pad footing details

Length of pad footing;	L = **1000** mm
Width of pad footing;	B = **1000** mm
Area of pad footing;	$A = L \times B =$ **1.000** m^2
Depth of pad footing;	h = **1000** mm
Depth of soil over pad footing;	h_{soil} = **0** mm
Density of concrete;	ρ_{conc} = **23.6** kN/m^3

Column details

Column base length;	l_A = **350** mm
Column base width;	b_A = **350** mm
Column eccentricity in x;	e_{PxA} = **0** mm
Column eccentricity in y;	e_{PyA} = **0** mm

Soil details

Density of soil;	ρ_{soil} = **20.0** kN/m^3
Design shear strength;	ϕ' = **25.0** deg
Design base friction;	δ = **19.3** deg
Allowable bearing pressure;	$P_{bearing}$ = **100** kN/m^2

Axial loading on column

Dead axial load on column;	P_{GA} = **15.0** kN

Imposed axial load on column; P_{QA} = **20.0** kN

Wind axial load on column; P_{WA} = **0.0** kN

Total axial load on column; P_A = **35.0** kN

Foundation loads

Dead surcharge load; F_{Gsur} = **0.000** kN/m^2

Imposed surcharge load; F_{Qsur} = **0.000** kN/m^2

Pad footing self weight; $F_{swt} = h \times \rho_{conc}$ = **23.600** kN/m^2

Soil self weight; $F_{soil} = h_{soil} \times \rho_{soil}$ = **0.000** kN/m^2

Total foundation load; $F = A \times (F_{Gsur} + F_{Qsur} + F_{swt} + F_{soil})$ = **23.6** kN

Calculate pad base reaction

Total base reaction; $T = F + P_A$ = **58.6** kN

Eccentricity of base reaction in x; e_{Tx} = (P_A ´ e_{PxA} + M_{xA} + H_{xA} ´ h) / T = **0** mm

Eccentricity of base reaction in y; e_{Ty} = (P_A ´ e_{PyA} + M_{yA} + H_{yA} ´ h) / T = **0** mm

Check pad base reaction eccentricity

abs(e_{Tx}) / L + abs(e_{Ty}) / B = **0.000**

Base reaction acts within middle third of base

Calculate pad base pressures

q_1 = T / A - 6 ´ T ´ e_{Tx} / (L ´ A) - 6 ´ T ´ e_{Ty} / (B ´ A) = **58.600** kN/m^2

q_2 = T / A - 6 ´ T ´ e_{Tx} / (L ´ A) + 6 ´ T ´ e_{Ty} / (B ´ A) = **58.600** kN/m^2

q_3 = T / A + 6 ´ T ´ e_{Tx} / (L ´ A) - 6 ´ T ´ e_{Ty} / (B ´ A) = **58.600** kN/m^2

q_4 = T / A + 6 ´ T ´ e_{Tx} / (L ´ A) + 6 ´ T ´ e_{Ty} / (B ´ A) = **58.600** kN/m^2

Minimum base pressure; $q_{min} = \min(q_1, q_2, q_3, q_4)$ = **58.600** kN/m^2

Maximum base pressure; $q_{max} = \max(q_1, q_2, q_3, q_4)$ = **58.600** kN/m^2

PASS - Maximum base pressure is less than allowable bearing pressure

PEPP PEARL ENGINEERS, PLANNERS & PROJECT MANAGERS	**Project:** 68 GROVE PARK RD UK		**Sheet No./Rev.** 672
02 TOWERFIELDS WESTERHAM ROAD BROMLEY, BR2 6HF Email: info@Pearlepp.co.uk Website: www. pearlepp.co.uk Tel no. 02035763199	**Job Ref. 2024-06-**	**Structural Engineer** **MM**	**Date** **11/06/2024**

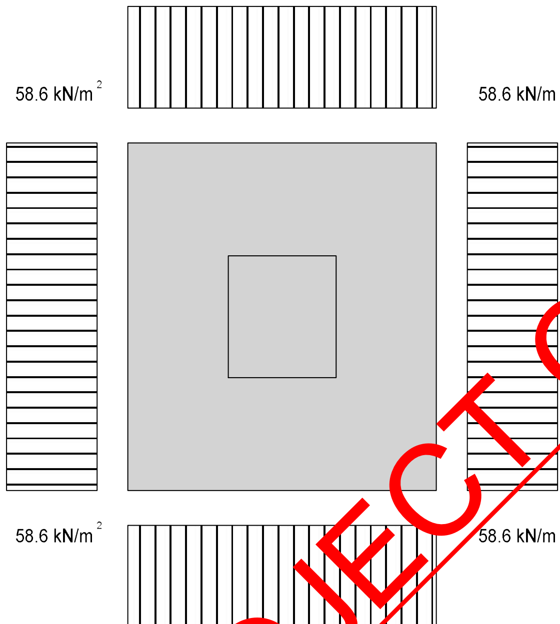

Material details

Characteristic strength of concrete; f_{cu} = **30** N/mm^2

Calculate pad lengths in x direction

Left hand length; $L_L = L / 2 + e_{PxA}$ = **500** mm

Right hand length; $L_R = L / 2 - e_{PxA}$ = **500** mm

Calculate rate of change of base pressure in x direction

Length of base reaction; $L_x = L$ = **1000** mm

Rate of change of base pressure; $C_x = [(q_1 + q_2) - (q_3 + q_4)] / (2 \times L_x)$ = **0.000** kN/m^2/m

Calculate pad lengths in y direction

Top length; $L_T = B / 2 - e_{PyA}$ = **500** mm

Bottom length; $L_B = B / 2 + e_{PyA}$ = **500** mm

Calculate rate of change of base pressure in y direction

Length of base reaction; $L_y = B$ = **1000** mm

Rate of change of base pressure; $C_y = [(q_1 + q_3) - (q_2 + q_4)] / (2 \times L_y)$ = **0.000** kN/m^2/m

Calculate minimum depth of unreinforced pad footing

Average pressure to left of pad footing; $q_L = (q_1 + q_2) / 2 - C_x$ ´ $(L_L - l_A / 2) / 2$ = **58.600** kN/m^2

Minimum depth to left of pad footing; $h_{Lmin} = (L_L - l_A/2)$ ´ max(0.15 ´ $[(q_L/1kN/m^2)^2$ $/(f_{cu}/1N/mm^2)]^{1/4}$,1) = **325** mm

Average pressure to right of pad footing; $q_R = (q_3 + q_4) / 2 - C_x$ ´ $(L_R - l_A / 2) / 2$ = **58.600** kN/m^2

Minimum depth to right of pad footing; $h_{Rmin} = (L_R - l_A/2)$ ´ max(0.15 ´ $[(q_R/1kN/m^2)^2$ $/(f_{cu}/1N/mm^2)]^{1/4}$,1) = **325** mm

Average pressure to top of pad footing; $q_T = (q_2 + q_4) / 2 - C_y$ ´ $(L_T - b_A / 2) / 2$ = **58.600** kN/m^2

Minimum depth to top of pad footing; h_{Tmin} = (L_T-b_A/2) ´ max(0.15 ´ [(q_T/1kN/m^2)^2 /(f_{cu}/1N/mm^2)]$^{1/4}$,1) = **325** mm

Average pressure to bottom of pad footing; q_B = (q_1 + q_3) / 2 - C_y ´ (L_B - b_A / 2) / 2 = **58.600** kN/m^2

Minimum depth to bottom of pad footing; h_{Bmin} = (L_B-b_A/2) ´ max(0.15 ´ [(q_B/1kN/m^2)^2 /(f_{cu}/1N/mm^2)]$^{1/4}$,1) = **325** mm

Minimum depth of unreinforced pad footing; h_{min} = max(h_{Lmin}, h_{Rmin}, h_{Tmin}, h_{Bmin}, 300 mm) = **325** mm

PASS - Unreinforced pad footing depth is greater than minimum

- **Isolated Concrete Pad Footing 3**

PAD FOOTING ANALYSIS AND DESIGN (BS8110-1:1997)

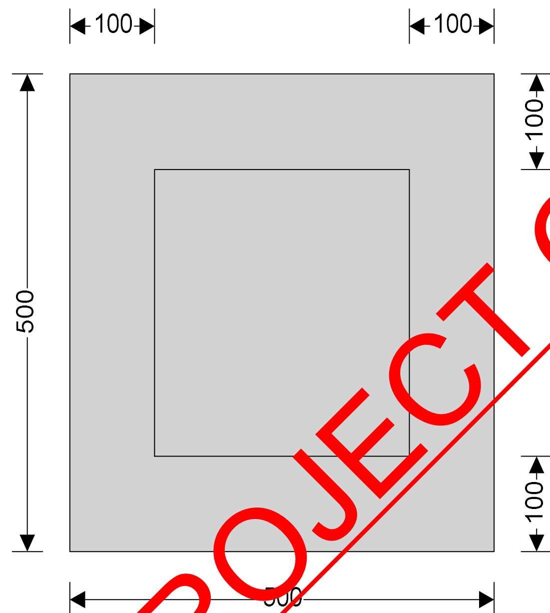

Pad footing details

Length of pad footing;	L = **500** mm
Width of pad footing;	B = **500** mm
Area of pad footing;	A = L × B = **0.250** m^2
Depth of pad footing;	h = **600** mm
Depth of soil over pad footing;	h_{soil} = **0** mm
Density of concrete;	ρ_{conc} = **23.6** kN/m^3

Column details

Column base length;	l_A = **300** mm
Column base width;	b_A = **300** mm
Column eccentricity in x;	e_{PxA} = **0** mm
Column eccentricity in y;	e_{PyA} = **0** mm

Soil details

Density of soil;	ρ_{soil} = **20.0** kN/m^3
Design shear strength;	ϕ' = **25.0** deg
Design base friction;	δ = **19.3** deg
Allowable bearing pressure;	$P_{bearing}$ = **100** kN/m^2

Axial loading on column

Dead axial load on column;	P_{GA} = **15.0** kN
Imposed axial load on column;	P_{QA} = **5.0** kN

02 TOWERFIELDS WESTERHAM ROAD
BROMLEY, BR2 6HF
Email: info@Pearlepp.co.uk
Website: www. pearlepp.co.uk
Tel no. 02035763199

Wind axial load on column;	P_{WA} = **0.0** kN
Total axial load on column;	P_A = **20.0** kN

Foundation loads

Dead surcharge load;	F_{Gsur} = **0.000** kN/m^2
Imposed surcharge load;	F_{Qsur} = **0.000** kN/m^2
Pad footing self weight;	$F_{swt} = h \times \rho_{conc}$ = **14.160** kN/m^2
Soil self weight;	$F_{soil} = h_{soil} \times \rho_{soil}$ = **0.000** kN/m^2
Total foundation load;	$F = A \times (F_{Gsur} + F_{Qsur} + F_{swt} + F_{soil})$ = **3.5** kN

Calculate pad base reaction

Total base reaction;	$T = F + P_A$ = **23.5** kN
Eccentricity of base reaction in x;	$e_{Tx} = (P_A \times e_{PxA} + M_{xA} + H_{xA} \times h) / T$ = **0** mm
Eccentricity of base reaction in y;	$e_{Ty} = (P_A \times e_{PyA} + M_{yA} + H_{yA} \times h) / T$ = **0** mm

Check pad base reaction eccentricity

$abs(e_{Tx}) / L + abs(e_{Ty}) / B$ = **0.000**

Base reaction acts within middle third of base

Calculate pad base pressures

$q_1 = T / A - 6 \times T \times e_{Tx} / (L \times A) - 6 \times T \times e_{Ty} / (B \times A)$ = **94.160** kN/m^2

$q_2 = T / A - 6 \times T \times e_{Tx} / (L \times A) + 6 \times T \times e_{Ty} / (B \times A)$ = **94.160** kN/m^2

$q_3 = T / A + 6 \times T \times e_{Tx} / (L \times A) - 6 \times T \times e_{Ty} / (B \times A)$ = **94.160** kN/m^2

$q_4 = T / A + 6 \times T \times e_{Tx} / (L \times A) + 6 \times T \times e_{Ty} / (B \times A)$ = **94.160** kN/m^2

Minimum base pressure;	$q_{min} = min(q_1, q_2, q_3, q_4)$ = **94.160** kN/m^2
Maximum base pressure;	$q_{max} = max(q_1, q_2, q_3, q_4)$ = **94.160** kN/m^2

PASS - Maximum base pressure is less than allowable bearing pressure

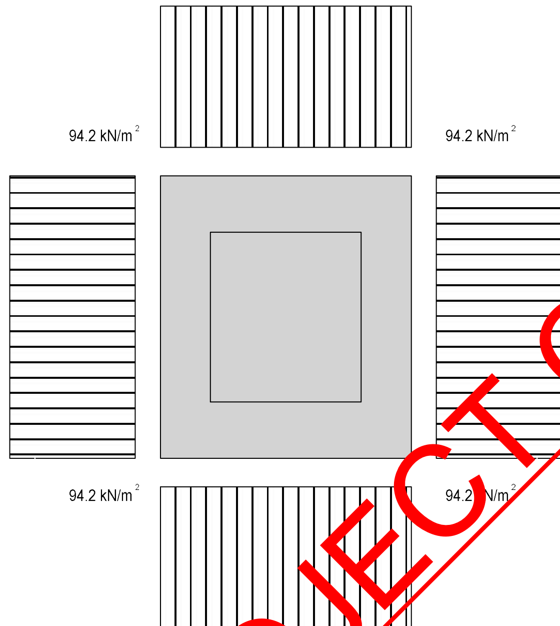

Material details

Characteristic strength of concrete; f_{cu} = **30** N/mm^2

Calculate pad lengths in x direction

Left hand length; $L_L = L / 2 + e_{PxA}$ = **250** mm

Right hand length; $L_R = L / 2 - e_{PxA}$ = **250** mm

Calculate rate of change of base pressure in x direction

Length of base reaction; $L_x = L$ = **500** mm

Rate of change of base pressure; $C_x = [(q_1 + q_2) - (q_3 + q_4)] / (2 \times L_x)$ = **0.000** kN/m^2/m

Calculate pad lengths in y direction

Top length; $L_T = B / 2 - e_{PyA}$ = **250** mm

Bottom length; $L_B = B / 2 + e_{PyA}$ = **250** mm

Calculate rate of change of base pressure in y direction

Length of base reaction; $L_y = B$ = **500** mm

Rate of change of base pressure; $C_y = [(q_1 + q_3) - (q_2 + q_4)] / (2 \times L_y)$ = **0.000** kN/m^2/m

Calculate minimum depth of unreinforced pad footing

Average pressure to left of pad footing; $q_L = (q_1 + q_2) / 2 - C_x$ ´ $(L_L - l_A / 2) / 2$ = **94.160** kN/m^2

Minimum depth to left of pad footing; $h_{Lmin} = (L_L - l_A/2)$ ´ max(0.15 ´ $[(q_L/1kN/m^2)^2$ $/(f_{cu}/1N/mm^2)]^{1/4}$,1) = **100** mm

Average pressure to right of pad footing; $q_R = (q_3 + q_4) / 2 - C_x$ ´ $(L_R - l_A / 2) / 2$ = **94.160** kN/m^2

Minimum depth to right of pad footing; $h_{Rmin} = (L_R - l_A/2)$ ´ max(0.15 ´ $[(q_R/1kN/m^2)^2$ $/(f_{cu}/1N/mm^2)]^{1/4}$,1) = **100** mm

Average pressure to top of pad footing; $q_T = (q_2 + q_4) / 2 - C_y$ ´ $(L_T - b_A / 2) / 2$ = **94.160** kN/m^2

Minimum depth to top of pad footing; $h_{Tmin} = (L_T-b_A/2) \times max(0.15 \times [(q_T/1kN/m^2)^2 /(f_{cu}/1N/mm^2)]^{1/4},1)$ = **100** mm

Average pressure to bottom of pad footing; $q_B = (q_1 + q_3) / 2 - C_y \times (L_B - b_A / 2) / 2$ = **94.160** kN/m^2

Minimum depth to bottom of pad footing; $h_{Bmin} = (L_B-b_A/2) \times max(0.15 \times [(q_B/1kN/m^2)^2 /(f_{cu}/1N/mm^2)]^{1/4},1)$ = **100** mm

Minimum depth of unreinforced pad footing; $h_{min} = max(h_{Lmin}, h_{Rmin}, h_{Tmin}, h_{Bmin}, 300 mm)$ = **300** mm

PASS - Unreinforced pad footing depth is greater than minimum

- **Isolated Reinforced Concrete Pad Footing 1**

PAD FOOTING ANALYSIS AND DESIGN (BS8110-1:1997)

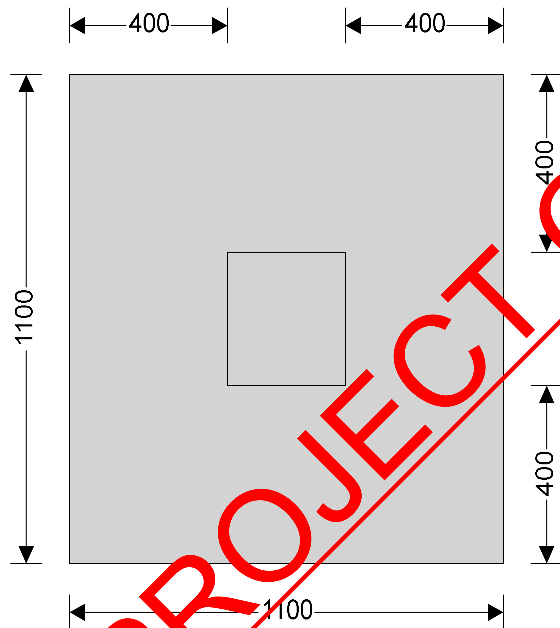

Pad footing details

Length of pad footing; L = **1100** mm

Width of pad footing; B = **1100** mm

Area of pad footing; $A = L \times B$ = **1.210** m^2

Depth of pad footing; h = **1000** mm

Depth of soil over pad footing; h_{soil} = **0** mm

Density of concrete; ρ_{conc} = **23.6** kN/m^3

Column details

Column base length; l_A = **300** mm

Column base width; b_A = **300** mm

Column eccentricity in x; e_{PxA} = **0** mm

Column eccentricity in y; e_{PyA} = **0** mm

Soil details

Density of soil; ρ_{soil} = **20.0** kN/m^3

Design shear strength; ϕ' = **25.0** deg

Design base friction; δ = **19.3** deg

Allowable bearing pressure; $P_{bearing}$ = **100** kN/m^2

Axial loading on column

Dead axial load on column; P_{GA} = **15.0** kN

Imposed axial load on column; P_{QA} = **12.0** kN

Wind axial load on column; P_{WA} = **0.0** kN

Total axial load on column; P_A = **27.0** kN

Foundation loads

Dead surcharge load; F_{Gsur} = **0.000** kN/m^2

Imposed surcharge load; F_{Qsur} = **0.000** kN/m^2

Pad footing self weight; $F_{swt} = h \times \rho_{conc}$ = **23.600** kN/m^2

Soil self weight; $F_{soil} = h_{soil} \times \rho_{soil}$ = **0.000** kN/m^2

Total foundation load; $F = A \times (F_{Gsur} + F_{Qsur} + F_{swt} + F_{soil})$ = **28.6** kN

Horizontal loading on column base

Dead horizontal load in x direction; H_{GxA} = **1.0** kN

Imposed horizontal load in x direction; H_{QxA} = **1.0** kN

Wind horizontal load in x direction; H_{WxA} = **0.0** kN

Total horizontal load in x direction; H_{xA} = **2.0** kN

Dead horizontal load in y direction; H_{GyA} = **0.0** kN

Imposed horizontal load in y direction; H_{QyA} = **0.0** kN

Wind horizontal load in y direction; H_{WyA} = **0.0** kN

Total horizontal load in y direction; H_{yA} = **0.0** kN

Moment on column base

Dead moment on column in x direction; M_{GxA} = **1.000** kNm

Imposed moment on column in x direction; M_{QxA} = **1.000** kNm

Wind moment on column in x direction; M_{WxA} = **0.000** kNm

Total moment on column in x direction; M_{xA} = **2.000** kNm

Dead moment on column in y direction; M_{GyA} = **0.000** kNm

Imposed moment on column in y direction; M_{QyA} = **0.000** kNm

Wind moment on column in y direction; M_{WyA} = **0.000** kNm

Total moment on column in y direction; M_{yA} = **0.000** kNm

Check stability against sliding

Resistance to sliding due to base friction

$H_{friction} = \max([P_{GA} + (F_{Gsur} + F_{swt} + F_{soil}) \times A], 0 \text{ kN}) \times \tan(\delta)$ = **15.3** kN

Passive pressure coefficient; $K_p = (1 + \sin(\phi')) / (1 - \sin(\phi'))$ = **2.464**

Stability against sliding in x direction

Passive resistance of soil in x direction; $H_{xpas} = 0.5 \times K_p \times (h^2 + 2 \times h \times h_{soil}) \times B \times \rho_{soil}$ = **27.1** kN

Total resistance to sliding in x direction; $H_{xres} = H_{friction} + H_{xpas}$ = **42.4** kN

PASS - Resistance to sliding is greater than horizontal load in x direction

Check stability against overturning in x direction

Total overturning moment; $M_{xOT} = M_{xA} + H_{xA}$ ´ h = **4.000** kNm

Restoring moment in x direction

Foundation loading; $M_{xsur} = A \times (F_{Gsur} + F_{swt} + F_{soil}) \times L / 2$ = **15.706** kNm

Axial loading on column; $M_{xaxial} = (P_{GA})$ ´ $(L / 2 - e_{PxA})$ = **8.250** kNm

Total restoring moment; $M_{xres} = M_{xsur} + M_{xaxial}$ = **23.956** kNm

PASS - Overturning safety factor exceeds the minimum of 1.5 in the x direction

Calculate pad base reaction

Total base reaction; T = F + P_A = **55.6** kN

Eccentricity of base reaction in x; e_{Tx} = (P_A ´ e_{PxA} + M_{xA} + H_{xA} ´ h) / T = **72** mm

Eccentricity of base reaction in y; e_{Ty} = (P_A ´ e_{PyA} + M_{yA} + H_{yA} ´ h) / T = **0** mm

Check pad base reaction eccentricity

abs(e_{Tx}) / L + abs(e_{Ty}) / B = **0.065**

Base reaction acts within middle third of base

Calculate pad base pressures

q_1 = T / A - 6 ´ T ´ e_{Tx} / (L ´ A) - 6 ´ T ´ e_{Ty} / (B ´

A) = **27.882** kN/m^2

q_2 = T / A - 6 ´ T ´ e_{Tx} / (L ´ A) + 6 ´ T ´ e_{Ty} / (B ´

A) = **27.882** kN/m^2

q_3 = T / A + 6 ´ T ´ e_{Tx} / (L ´ A) - 6 ´ T ´ e_{Ty} / (B ´

A) = **63.946** kN/m^2

q_4 = T / A + 6 ´ T ´ e_{Tx} / (L ´ A) + 6 ´ T ´ e_{Ty} / (B

´ A) = **63.946** kN/m^2

Minimum base pressure; q_{min} = min(q_1, q_2, q_3, q_4) = **27.882** kN/m^2

Maximum base pressure; q_{max} = max(q_1, q_2, q_3, q_4) = **63.946** kN/m^2

PASS - Maximum base pressure is less than allowable bearing pressure

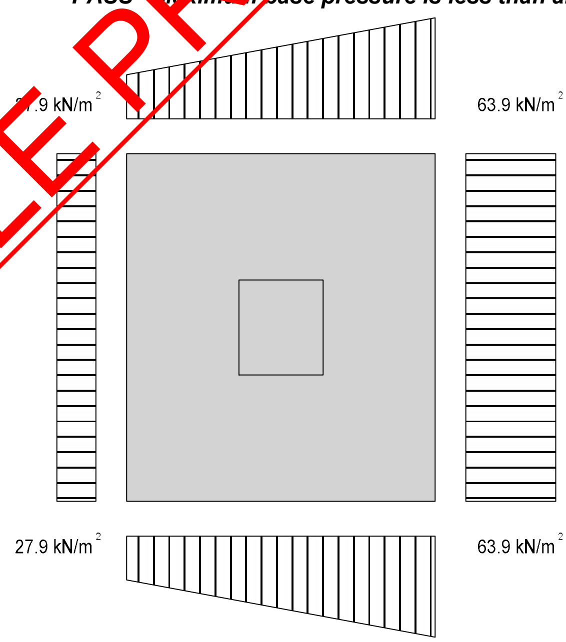

Partial safety factors for loads

Partial safety factor for dead loads; γ_{fG} = **1.40**

PEPP — PEARL ENGINEERS, PLANNERS & PROJECT MANAGERS 02 TOWERFIELDS WESTERHAM ROAD BROMLEY, BR2 6HF Email: info@Pearlepp.co.uk Website: www. pearlepp.co.uk Tel no. 02035763199	**Project:** 68 GROVE PARK RD UK		**Sheet No./Rev.** 681
	Job Ref. 2024-06-	**Structural Engineer** **MM**	**Date** **11/06/2024**

Partial safety factor for imposed loads; γ_{fQ} = **1.60**

Partial safety factor for wind loads; γ_{fW} = **0.00**

Ultimate axial loading on column

Ultimate axial load on column; $P_{uA} = P_{GA} \times \gamma_{fG} + P_{QA} \times \gamma_{fQ} + P_{WA} \times \gamma_{fW}$ = **40.2** kN

Ultimate foundation loads

Ultimate foundation load; $F_u = A \times [(F_{Gsur} + F_{swt} + F_{soil}) \times \gamma_{fG} + F_{Qsur} \times \gamma_{fQ}]$ = **40.0** kN

Ultimate horizontal loading on column

Ultimate horizontal load in x direction; $H_{xuA} = H_{GxA} \times \gamma_{fG} + H_{QxA} \times \gamma_{fQ} + H_{WxA} \times \gamma_{fW}$ = **3.0** kN

Ultimate horizontal load in y direction; $H_{yuA} = H_{GyA} \times \gamma_{fG} + H_{QyA} \times \gamma_{fQ} + H_{WyA} \times \gamma_{fW}$ = **0.0** kN

Ultimate moment on column

Ultimate moment on column in x direction; $M_{xuA} = M_{GxA} \times \gamma_{fG} + M_{QxA} \times \gamma_{fQ} + M_{WxA} \times \gamma_{fW}$ = **3.000** kNm

Ultimate moment on column in y direction; $M_{yuA} = M_{GyA} \times \gamma_{fG} + M_{QyA} \times \gamma_{fQ} + M_{WyA} \times \gamma_{fW}$ = **0.000** kNm

Calculate ultimate pad base reaction

Ultimate base reaction; $T_u = F_u + P_{uA}$ = **80.2** kN

Eccentricity of ultimate base reaction in x; $e_{Txu} = (P_{uA} \times e_{PxA} + M_{xuA} + H_{xuA} \times h) / T_u$ = **75** mm

Eccentricity of ultimate base reaction in y; $e_{Tyu} = (P_{uA} \times e_{PyA} + M_{yuA} + H_{yuA} \times h) / T_u$ = **0** mm

Calculate ultimate pad base pressures

$q_{1u} = T_u/A - 6$ ´ T_u ´ $e_{Txu}/(L$ ´ $A) - 6$ ´ T_u ´ $e_{Tyu}/(B$ ´ $A)$ =

39.216 kN/m^2

$q_{2u} = T_u/A - 6$ ´ T_u ´ $e_{Txu}/(L$ ´ $A) + 6$ ´ T_u ´ $e_{Tyu}/(B$ ´ $A)$ =

39.216 kN/m^2

$q_{3u} = T_u/A + 6$ ´ T_u ´ $e_{Txu}/(L$ ´ $A) - 6$ ´ T_u ´ $e_{Tyu}/(B$ ´ $A)$ =

93.310 kN/m^2

$q_{4u} = T_u/A + 6$ ´ T_u ´ $e_{Txu}/(L$ ´ $A) + 6$ ´ T_u ´ $e_{Tyu}/(B$ ´ $A)$ =

93.310 kN/m^2

Minimum ultimate base pressure; $q_{minu} = \min(q_{1u}, q_{2u}, q_{3u}, q_{4u})$ = **39.216** kN/m^2

Maximum ultimate base pressure; $q_{maxu} = \max(q_{1u}, q_{2u}, q_{3u}, q_{4u})$ = **93.310** kN/m^2

Calculate rate of change of base pressure in x direction

Left hand base reaction; $f_{uL} = (q_{1u} + q_{2u}) \times B / 2$ = **43.137** kN/m

Right hand base reaction; $f_{uR} = (q_{3u} + q_{4u}) \times B / 2$ = **102.642** kN/m

Length of base reaction; $L_x = L$ = **1100** mm

Rate of change of base pressure; $C_x = (f_{uR} - f_{uL}) / L_x$ = **54.095** kN/m/m

Calculate pad lengths in x direction

Left hand length; $L_L = L / 2 + e_{PxA}$ = **550** mm

Right hand length; $L_R = L / 2 - e_{PxA}$ = **550** mm

Calculate ultimate moments in x direction

Ultimate moment in x direction; $M_x = f_{uL}$ ´ $L_L^2 / 2 + C_x$ ´ $L_L^3 / 6 - F_u$ ´ $L_L^2 / (2$ ´ $L) +$ H_{xuA} ´ $h + M_{xuA}$ = **8.528** kNm

02 TOWERFIELDS WESTERHAM ROAD
BROMLEY, BR2 6HF
Email: info@Pearlepp.co.uk
Website: www. pearlepp.co.uk
Tel no. 02035763199

Calculate rate of change of base pressure in y direction

Top edge base reaction; $f_{uT} = (q_{2u} + q_{4u}) \times L / 2 =$ **72.889** kN/m

Bottom edge base reaction; $f_{uB} = (q_{1u} + q_{3u}) \times L / 2 =$ **72.889** kN/m

Length of base reaction; $L_y = B =$ **1100** mm

Rate of change of base pressure; $C_y = (f_{uB} - f_{uT}) / L_y =$ **0.000** kN/m/m

Calculate pad lengths in y direction

Top length; $L_T = B / 2 - e_{PyA} =$ **550** mm

Bottom length; $L_B = B / 2 + e_{PyA} =$ **550** mm

Calculate ultimate moments in y direction

Ultimate moment in y direction; $M_y = f_{uT} \times L_T^2 / 2 + C_y \times L_T^3 / 6 - F_u \times L_T^2 / (2 \times B) =$ **5.527** kNm

Material details

Characteristic strength of concrete; $f_{cu} =$ **30** N/mm^2

Characteristic strength of reinforcement; $f_y =$ **500** N/mm^2

Characteristic strength of shear reinforcement; $f_{yv} =$ **500** N/mm^2

Nominal cover to reinforcement; $c_{nom} =$ **30** mm

Moment design in x direction

Diameter of tension reinforcement; $\phi_{xB} =$ **16** mm

Depth of tension reinforcement; $d_x = h - c_{nom} - \phi_{xB} / 2 =$ **962** mm

Design formula for rectangular beams (cl 3.4.4.4)

$K_x = M_x / (B \times d_x^2 \times f_{cu}) =$ **0.000**

$K_x' = 0.156$

$K_x < K_x'$ compression reinforcement is not required

Lever arm; $z_x = d_x \times \min([0.5 + \sqrt{(0.25 - K_x / 0.9)}], 0.95) =$ **914** mm

Area of tension reinforcement required; $A_{s\_x\_req} = M_x / (0.87 \times f_y \times z_x) =$ **21** mm^2

Minimum area of tension reinforcement; $A_{s\_x\_min} = 0.0013 \times B \times h =$ **1430** mm^2

Tension reinforcement provided; **10 No. 16 dia. bars bottom (125 centres)**

Area of tension reinforcement provided; $A_{s\_xB\_prov} = N_{xB} \times \pi \times \phi_{xB}^2 / 4 =$ **2011** mm^2

PASS - Tension reinforcement provided exceeds tension reinforcement required

Moment design in y direction

Diameter of tension reinforcement; $\phi_{yB} =$ **16** mm

Depth of tension reinforcement; $d_y = h - c_{nom} - \phi_{xB} - \phi_{yB} / 2 =$ **946** mm

Design formula for rectangular beams (cl 3.4.4.4)

$K_y = M_y / (L \times d_y^2 \times f_{cu}) =$ **0.000**

$K_y' = 0.156$

$K_y < K_y'$ compression reinforcement is not required

Lever arm; $z_y = d_y \times \min([0.5 + \sqrt{(0.25 - K_y / 0.9)}], 0.95) =$ **899** mm

Area of tension reinforcement required; $A_{s\_y\_req} = M_y / (0.87 \times f_y \times z_y) =$ **14** mm^2

Minimum area of tension reinforcement; $A_{s\_y\_min} = 0.0013 \times L \times h =$ **1430** mm^2

Tension reinforcement provided; **10 No. 16 dia. bars bottom (125 centres)**

Area of tension reinforcement provided; $A_{s\_yB\_prov} = N_{yB} \times \pi \times \phi_{yB}^2 / 4 =$ **2011** mm^2

PASS - Tension reinforcement provided exceeds tension reinforcement required

Calculate ultimate shear force at d from left face of column

Ultimate pressure for shear; $q_{su} = (q_{2u} + C_x$ ´ $(L / 2 + e_{PxA} - l_A / 2 - d_x) / B + q_{1u}) / 2$

$q_{su} =$ **25.397** kN/m^2

Area loaded for shear; $A_s = B$ ´ $min((L / 2 + e_{PxA} - l_A / 2 - d_x), 3$ ´ $(L / 2 + e_{Tx}))$

= **-0.618** m^2

Ultimate shear force; $V_{su} = A_s$ ´ $(q_{su} - F_u / A) =$ **4.725** kN

Shear stresses at d from left face of column (cl 3.5.5.2)

Design shear stress; $v_{su} = V_{su} / (B$ ´ $d_x) =$ **0.004** N/mm^2

From BS 8110:Part 1:1997 - Table 3.8

Design concrete shear stress; $v_c = 0.79 N/mm^2$ ´ $min(3, [100$ ´ $A_{s\_xB\_prov} / (B$ ´ $d_x)]^{1/3})$ ´ $max((400 mm / d_x)^{1/4}, 0.67)$ ´ $(min(f_{cu} / 1 N/mm^2, 40) / 25)^{1/3} / 1.25 =$ **0.310** N/mm^2

Allowable design shear stress; $v_{max} = min(0.8 N/mm^2 \times \sqrt{(f_{cu} / 1 N/mm^2)}, 5 N/mm^2) =$ **4.382** N/mm^2

PASS - $v_{su} < v_c$ - No shear reinforcement required

Calculate ultimate punching shear force at face of column

Ultimate pressure for punching shear; $q_{puA} = q_{1u}+[(L/2+e_{PxA}-l_A/2)+(l_A)/2]$ ´ $C_x/B-[(B/2+e_{PyA}-b_A/2)+(b_A)/2]$ ´ $C_y/L =$ **66.263** kN/m^2

Average effective depth of reinforcement; $d = (d_x + d_y) / 2 =$ **954** mm

Area loaded for punching shear at column; $A_{pA} = (l_A)$ ´ $(b_A) =$ **0.090** m^2

Length of punching shear perimeter; $u_{pA} = 2$ ´ $(l_A)+2$ ´ $(b_A) =$ **1200** mm

Ultimate shear force at shear perimeter; $V_{puA} = P_{uA} + (F_u / A - q_{puA}) \times A_{pA} =$ **37.210** kN

Effective shear force at shear perimeter; $V_{puAeff} = V_{puA}$ ´ $[1+1.5$ ´ $abs(M_{xuA})/(V_{puA}$ ´ $(b_A))] =$ **52.210** kN

Punching shear stresses at face of column (cl 3.7.7.2)

Design shear stress; $v_{puA} = V_{puAeff} / (u_{pA} \times d) =$ **0.046** N/mm^2

Allowable design shear stress; $v_{max} = min(0.8N/mm^2 \times \sqrt{(f_{cu} / 1 N/mm^2)}, 5 N/mm^2) =$ **4.382** N/mm^2

PASS - Design shear stress is less than allowable design shear stress

PEPP PEARL ENGINEERS, PLANNERS & PROJECT MANAGERS	**Project:** 68 GROVE PARK RD UK		**Sheet No./Rev.** 684
02 TOWERFIELDS WESTERHAM ROAD BROMLEY, BR2 6HF Email: info@Pearlepp.co.uk Website: www. pearlepp.co.uk Tel no. 02035763199	**Job Ref. 2024-06-**	**Structural Engineer** **MM**	**Date** **11/06/2024**

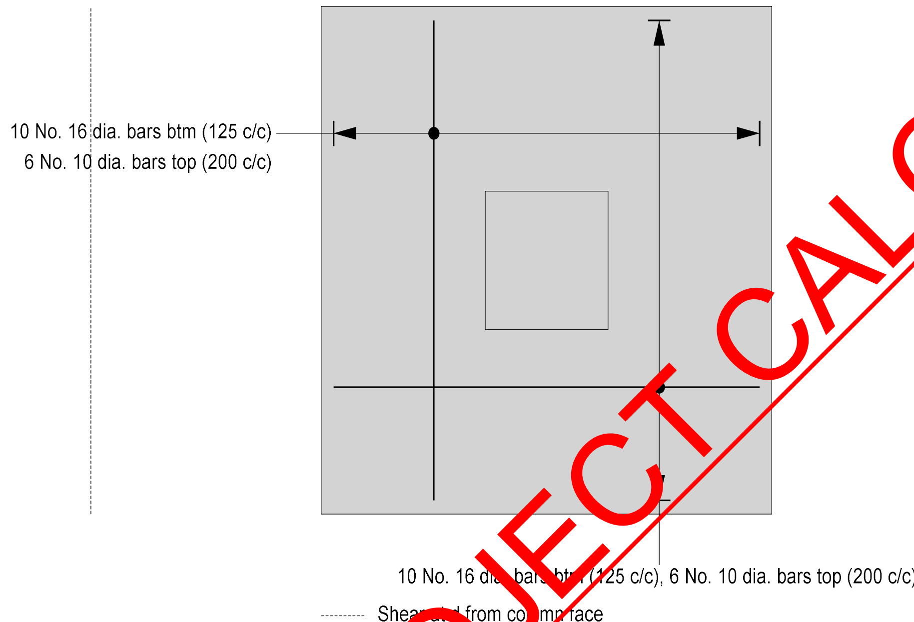

- **Isolated Reinforced Concrete Pad Footing 2**

PAD FOOTING ANALYSIS AND DESIGN (BS8110-1:1997)

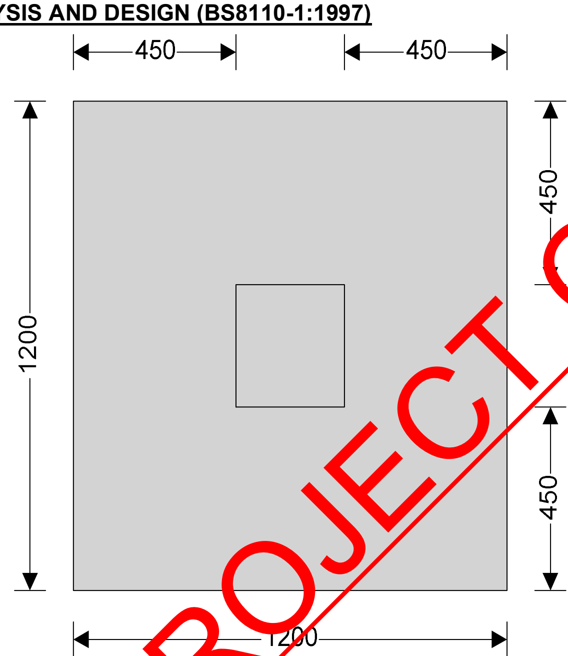

Pad footing details

Length of pad footing;	L = **1200** mm
Width of pad footing;	B = **1200** mm
Area of pad footing;	$A = L \times B =$ **1.440** m^2
Depth of pad footing;	h = **1000** mm
Depth of soil over pad footing;	h_{soil} = **0** mm
Density of concrete;	ρ_{conc} = **23.6** kN/m^3

Column details

Column base length;	l_A = **300** mm
Column base width;	b_A = **300** mm
Column eccentricity in x;	e_{PxA} = **0** mm
Column eccentricity in y;	e_{PyA} = **0** mm

Soil details

Density of soil;	ρ_{soil} = **20.0** kN/m^3
Design shear strength;	ϕ' = **25.0** deg
Design base friction;	δ = **19.3** deg
Allowable bearing pressure;	$P_{bearing}$ = **100** kN/m^2

Axial loading on column

Dead axial load on column;	P_{GA} = **58.0** kN
Imposed axial load on column;	P_{QA} = **33.0** kN

Wind axial load on column; P_{WA} = **0.0** kN

Total axial load on column; P_A = **91.0** kN

Foundation loads

Dead surcharge load; F_{Gsur} = **0.000** kN/m^2

Imposed surcharge load; F_{Qsur} = **0.000** kN/m^2

Pad footing self weight; $F_{swt} = h \times \rho_{conc}$ = **23.600** kN/m^2

Soil self weight; $F_{soil} = h_{soil} \times \rho_{soil}$ = **0.000** kN/m^2

Total foundation load; $F = A \times (F_{Gsur} + F_{Qsur} + F_{swt} + F_{soil})$ = **3[illegible].0** kN

Horizontal loading on column base

Dead horizontal load in x direction; H_{GxA} = **0.5** kN

Imposed horizontal load in x direction; H_{QxA} = **0.7** kN

Wind horizontal load in x direction; H_{WxA} = **0.0** kN

Total horizontal load in x direction; H_{xA} = **1.2** kN

Dead horizontal load in y direction; H_{GyA} = **0.0** kN

Imposed horizontal load in y direction; H_{QyA} = **0.0** kN

Wind horizontal load in y direction; H_{WyA} = **0.0** kN

Total horizontal load in y direction; H_{yA} = **0.0** kN

Moment on column base

Dead moment on column in x direction; M_{GxA} = **0.700** kNm

Imposed moment on column in x direction; M_{QxA} = **0.500** kNm

Wind moment on column in x direction; M_{WxA} = **0.000** kNm

Total moment on column in x direction; M_{xA} = **1.200** kNm

Dead moment on column in y direction; M_{GyA} = **0.000** kNm

Imposed moment on column in y direction; M_{QyA} = **0.000** kNm

Wind moment on column in y direction; M_{WyA} = **0.000** kNm

Total moment on column in y direction; M_{yA} = **0.000** kNm

Check stability against sliding

Resistance to sliding due to base friction

$H_{friction} = \max([P_{GA} + (F_{Gsur} + F_{swt} + F_{soil}) \times A], 0\text{ kN}) \times \tan(\delta)$ = **32.2** kN

Passive pressure coefficient; $K_p = (1 + \sin(\phi')) / (1 - \sin(\phi'))$ = **2.464**

Stability against sliding in x direction

Passive resistance of soil in x direction; $H_{xpas} = 0.5 \times K_p \times (h^2 + 2 \times h \times h_{soil}) \times B \times \rho_{soil}$ = **29.6** kN

Total resistance to sliding in x direction; $H_{xres} = H_{friction} + H_{xpas}$ = **61.8** kN

PASS - Resistance to sliding is greater than horizontal load in x direction

Check stability against overturning in x direction

Total overturning moment; $M_{xOT} = M_{xA} + H_{xA}$ ´ h = **2.400** kNm

Restoring moment in x direction

Foundation loading; $M_{xsur} = A \times (F_{Gsur} + F_{swt} + F_{soil}) \times L / 2$ = **20.390** kNm

Axial loading on column; $M_{xaxial} = (P_{GA})$ ´ $(L / 2 - e_{PxA})$ = **34.800** kNm

Total restoring moment; $M_{xres} = M_{xsur} + M_{xaxial}$ = **55.190** kNm

PASS - Overturning safety factor exceeds the minimum of 1.5 in the x direction

PEPP PEARL ENGINEERS, PLANNERS & PROJECT MANAGERS 02 TOWERFIELDS WESTERHAM ROAD BROMLEY, BR2 6HF Email: info@Pearlepp.co.uk Website: www. pearlepp.co.uk Tel no. 02035763199	**Project:** 68 GROVE PARK RD UK		**Sheet No./Rev.** 687
	Job Ref. 2024-06-	**Structural Engineer** **MM**	**Date** **11/06/2024**

Calculate pad base reaction

Total base reaction; $T = F + P_A =$ **125.0** kN

Eccentricity of base reaction in x; $e_{Tx} = (P_A$ ´ $e_{PxA} + M_{xA} + H_{xA}$ ´ $h) / T =$ **19** mm

Eccentricity of base reaction in y; $e_{Ty} = (P_A$ ´ $e_{PyA} + M_{yA} + H_{yA}$ ´ $h) / T =$ **0** mm

Check pad base reaction eccentricity

$abs(e_{Tx}) / L + abs(e_{Ty}) / B =$ **0.016**

Base reaction acts within middle third of base

Calculate pad base pressures

$q_1 = T / A - 6$ ´ T ´ $e_{Tx} / (L$ ´ $A) - 6$ ´ T ´ $e_{Ty} / (B$ ´ $A) =$ **78.461** kN/m^2

$q_2 = T / A - 6$ ´ T ´ $e_{Tx} / (L$ ´ $A) + 6$ ´ T ´ $e_{Ty} / (B$ ´ $A) =$ **78.461** kN/m^2

$q_3 = T / A + 6$ ´ T ´ $e_{Tx} / (L$ ´ $A) - 6$ ´ T ´ $e_{Ty} / (B$ ´ $A) =$ **95.128** kN/m^2

$q_4 = T / A + 6$ ´ T ´ $e_{Tx} / (L$ ´ $A) + 6$ ´ T ´ $e_{Ty} / (B$ ´ $A) =$ **95.128** kN/m^2

Minimum base pressure; $q_{min} = min(q_1, q_2, q_3, q_4) =$ **78.461** kN/m^2

Maximum base pressure; $q_{max} = max(q_1, q_2, q_3, q_4) =$ **95.128** kN/m^2

PASS - Maximum base pressure is less than allowable bearing pressure

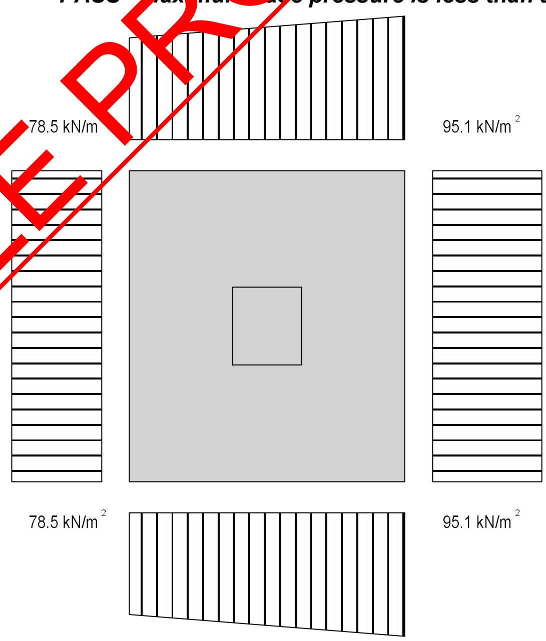

Partial safety factors for loads

Partial safety factor for dead loads; $\gamma_{fG} =$ **1.40**

Partial safety factor for imposed loads; $\gamma_{fQ} =$ **1.60**

Partial safety factor for wind loads; γ_{fW} = **0.00**

Ultimate axial loading on column

Ultimate axial load on column; $P_{uA} = P_{GA} \times \gamma_{fG} + P_{QA} \times \gamma_{fQ} + P_{WA} \times \gamma_{fW}$ = **134.0** kN

Ultimate foundation loads

Ultimate foundation load; $F_u = A \times [(F_{Gsur} + F_{swt} + F_{soil}) \times \gamma_{fG} + F_{Qsur} \times \gamma_{fQ}]$ = **47.6** kN

Ultimate horizontal loading on column

Ultimate horizontal load in x direction; $H_{xuA} = H_{GxA} \times \gamma_{fG} + H_{QxA} \times \gamma_{fQ} + H_{WxA} \times \gamma_{fW}$ = **1.8** kN

Ultimate horizontal load in y direction; $H_{yuA} = H_{GyA} \times \gamma_{fG} + H_{QyA} \times \gamma_{fQ} + H_{WyA} \times \gamma_{fW}$ = **0.0** kN

Ultimate moment on column

Ultimate moment on column in x direction; $M_{xuA} = M_{GxA} \times \gamma_{fG} + M_{QxA} \times \gamma_{fQ} + M_{WxA} \times \gamma_{fW}$ = **1.780** kNm

Ultimate moment on column in y direction; $M_{yuA} = M_{GyA} \times \gamma_{fG} + M_{QyA} \times \gamma_{fQ} + M_{WyA} \times \gamma_{fW}$ = **0.000** kNm

Calculate ultimate pad base reaction

Ultimate base reaction; $T_u = F_u + P_{uA}$ = **181.6** kN

Eccentricity of ultimate base reaction in x; $e_{Txu} = (P_{uA} \times e_{PxA} + M_{xuA} + H_{xuA} \times h) / T_u$ = **20** mm

Eccentricity of ultimate base reaction in y; $e_{Tyu} = (P_{uA} \times e_{PyA} + M_{yuA} + H_{yuA} \times h) / T_u$ = **0** mm

Calculate ultimate pad base pressures

q_{1u} = T_u/A - 6 ´ T_u ´ e_{Txu}/(L ´ A) - 6 ´ T_u ´ e_{Tyu}/(B ´ A) =

113.596 kN/m^2

q_{2u} = T_u/A - 6 ´ T_u ´ e_{Txu}/(L ´ A) + 6 ´ T_u ´ e_{Tyu}/(B ´ A) =

113.596 kN/m^2

q_{3u} = T_u/A + 6 ´ T_u ´ e_{Txu}/(L ´ A) - 6 ´ T_u ´ e_{Tyu}/(B ´ A) =

138.596 kN/m^2

q_{4u} = T_u/A + 6 ´ T_u ´ e_{Txu}/(L ´ A) + 6 ´ T_u ´ e_{Tyu}/(B ´ A) =

138.596 kN/m^2

Minimum ultimate base pressure; $q_{minu} = \min(q_{1u}, q_{2u}, q_{3u}, q_{4u})$ = **113.596** kN/m^2

Maximum ultimate base pressure; $q_{maxu} = \max(q_{1u}, q_{2u}, q_{3u}, q_{4u})$ = **138.596** kN/m^2

Calculate rate of change of base pressure in x direction

Left hand base reaction; $f_{uL} = (q_{1u} + q_{2u}) \times B / 2$ = **136.315** kN/m

Right hand base reaction; $f_{uR} = (q_{3u} + q_{4u}) \times B / 2$ = **166.315** kN/m

Length of base reaction; $L_x = L$ = **1200** mm

Rate of change of base pressure; $C_x = (f_{uR} - f_{uL}) / L_x$ = **25.000** kN/m/m

Calculate pad lengths in x direction

Left hand length; $L_L = L / 2 + e_{PxA}$ = **600** mm

Right hand length; $L_R = L / 2 - e_{PxA}$ = **600** mm

Calculate ultimate moments in x direction

Ultimate moment in x direction; M_x = f_{uL} ´ L_L^2 / 2 + C_x ´ L_L^3 / 6 - F_u ´ L_L^2 / (2 ´ L) + H_{xuA} ´ h + M_{xuA} = **21.900** kNm

Calculate rate of change of base pressure in y direction

Top edge base reaction; $f_{uT} = (q_{2u} + q_{4u}) \times L / 2$ = **151.315** kN/m

Bottom edge base reaction; $f_{uB} = (q_{1u} + q_{3u}) \times L / 2 =$ **151.315** kN/m

Length of base reaction; $L_y = B =$ **1200** mm

Rate of change of base pressure; $C_y = (f_{uB} - f_{uT}) / L_y =$ **0.000** kN/m/m

Calculate pad lengths in y direction

Top length; $L_T = B / 2 - e_{PyA} =$ **600** mm

Bottom length; $L_B = B / 2 + e_{PyA} =$ **600** mm

Calculate ultimate moments in y direction

Ultimate moment in y direction; $M_y = f_{uT} \times L_T^2 / 2 + C_y \times L_T^3 / 6 - F_u \times L_B^2 / (2 \times B) =$ **20.100** kNm

Material details

Characteristic strength of concrete; $f_{cu} =$ **30** N/mm^2

Characteristic strength of reinforcement; $f_y =$ **500** N/mm^2

Characteristic strength of shear reinforcement; $f_{yv} =$ **500** N/mm^2

Nominal cover to reinforcement; $c_{nom} =$ **30** mm

Moment design in x direction

Diameter of tension reinforcement; $\phi_{xB} =$ **16** mm

Depth of tension reinforcement; $d_x = h - c_{nom} - \phi_{xB} / 2 =$ **962** mm

Design formula for rectangular beams (cl 3.4.4.4)

$K_x = M_x / (B \times d_x^2 \times f_{cu}) =$ **0.001**

$K_x' = 0.156$

$K_x < K_x'$ compression reinforcement is not required

Lever arm; $z_x = d_x \times \min([0.5 + \sqrt{(0.25 - K_x / 0.9)}], 0.95) =$ **914** mm

Area of tension reinforcement required; $A_{s\_x\_req} = M_x / (0.87 \times f_y \times z_x) =$ **55** mm^2

Minimum area of tension reinforcement; $A_{s\_x\_min} = 0.0013 \times B \times h =$ **1560** mm^2

Tension reinforcement provided; **10 No. 16 dia. bars bottom (125 centres)**

Area of tension reinforcement provided; $A_{s\_xB\_prov} = N_{xB} \times \pi \times \phi_{xB}^2 / 4 =$ **2011** mm^2

PASS - Tension reinforcement provided exceeds tension reinforcement required

Moment design in y direction

Diameter of tension reinforcement; $\phi_{yB} =$ **16** mm

Depth of tension reinforcement; $d_y = h - c_{nom} - \phi_{xB} - \phi_{yB} / 2 =$ **946** mm

Design formula for rectangular beams (cl 3.4.4.4)

$K_y = M_y / (L \times d_y^2 \times f_{cu}) =$ **0.001**

$K_y' = 0.156$

$K_y < K_y'$ compression reinforcement is not required

Lever arm; $z_y = d_y \times \min([0.5 + \sqrt{(0.25 - K_y / 0.9)}], 0.95) =$ **899** mm

Area of tension reinforcement required; $A_{s\_y\_req} = M_y / (0.87 \times f_y \times z_y) =$ **51** mm^2

Minimum area of tension reinforcement; $A_{s\_y\_min} = 0.0013 \times L \times h =$ **1560** mm^2

Tension reinforcement provided; **10 No. 16 dia. bars bottom (125 centres)**

Area of tension reinforcement provided; $A_{s\_yB\_prov} = N_{yB} \times \pi \times \phi_{yB}^2 / 4 =$ **2011** mm^2

PASS - Tension reinforcement provided exceeds tension reinforcement required

Calculate ultimate punching shear force at face of column

Ultimate pressure for punching shear; $q_{puA} = q_{1u}+[(L/2+e_{PxA}-l_A/2)+(l_A)/2]$ ´ $C_x/B-[(B/2+e_{PyA}-b_A/2)+(b_A)/2]$ ´ C_y/L = **126.096** kN/m^2

Average effective depth of reinforcement; $d = (d_x + d_y) / 2$ = **954** mm

Area loaded for punching shear at column; $A_{pA} = (l_A)$ ´ (b_A) = **0.090** m^2

Length of punching shear perimeter; $u_{pA} = 2$ ´ $(l_A)+2$ ´ (b_A) = **1200** mm

Ultimate shear force at shear perimeter; $V_{puA} = P_{uA} + (F_u / A - q_{puA}) \times A_{pA}$ = **125.625** kN

Effective shear force at shear perimeter; $V_{puAeff} = V_{puA}$ ´ $[1+1.5$ ´ $abs(M_{xuA})/(V_{puA}$ ´ $(b_A))]$ = **134.525** kN

Punching shear stresses at face of column (cl 3.7.7.2)

Design shear stress; $v_{puA} = V_{puAeff} / (u_{pA} \times d)$ = **0.118** N/mm^2

Allowable design shear stress; $v_{max} = \min(0.8N/mm^2 \times \sqrt{(f_{cu} / 1 N/mm^2)}, 5 N/mm^2)$ = **4.382** N/mm^2

PASS - Design shear stress is less than allowable design shear stress

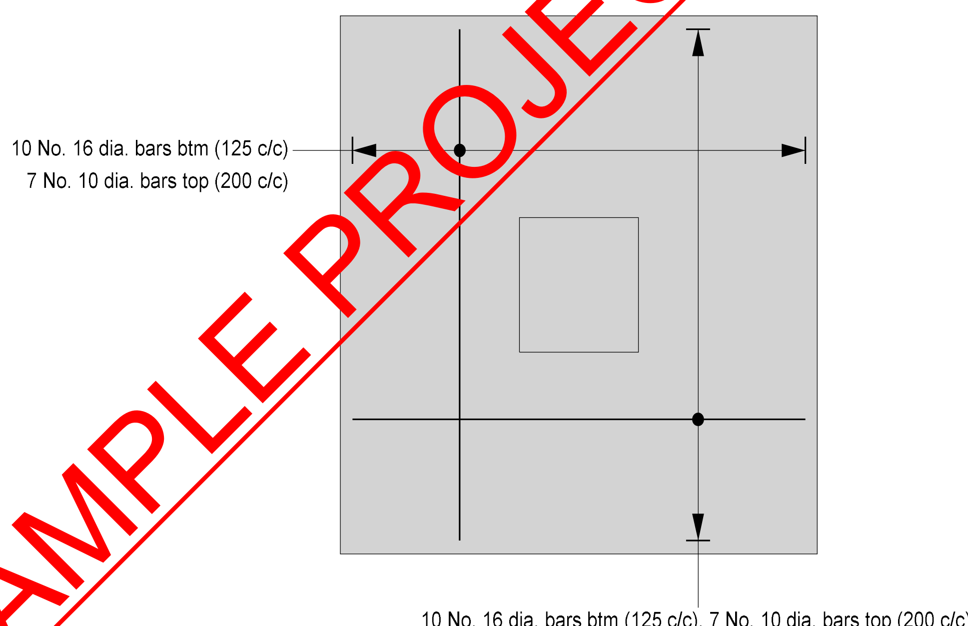

- **Isolated Reinforced Concrete Pad Footing 3**

PAD FOOTING ANALYSIS AND DESIGN (BS8110-1:1997)

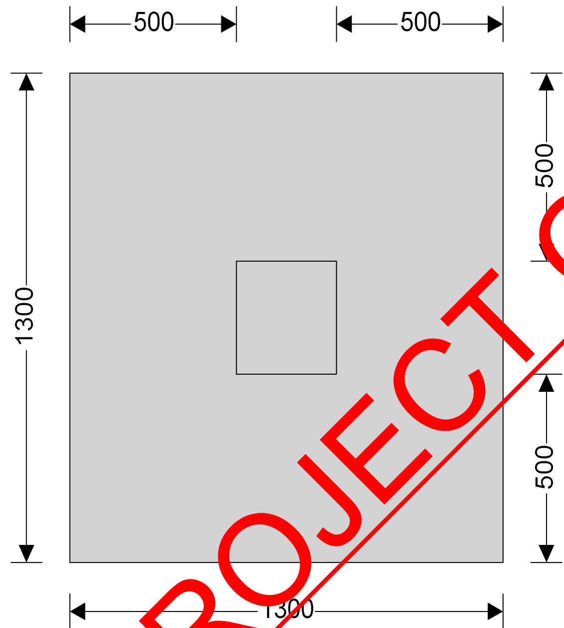

Pad footing details

Length of pad footing;	L = **1300** mm
Width of pad footing;	B = **1300** mm
Area of pad footing;	$A = L \times B =$ **1.690** m^2
Depth of pad footing;	h = **1000** mm
Depth of soil over pad footing;	h_{soil} = **0** mm
Density of concrete;	ρ_{conc} = **23.6** kN/m^3

Column details

Column base length;	l_A = **300** mm
Column base width;	b_A = **300** mm
Column eccentricity in x;	e_{PxA} = **0** mm
Column eccentricity in y;	e_{PyA} = **0** mm

Soil details

Density of soil;	ρ_{soil} = **20.0** kN/m^3
Design shear strength;	ϕ' = **25.0** deg
Design base friction;	δ = **19.3** deg
Allowable bearing pressure;	$P_{bearing}$ = **100** kN/m^2

Axial loading on column

Dead axial load on column;	P_{GA} = **72.0** kN
Imposed axial load on column;	P_{QA} = **41.0** kN

Wind axial load on column; P_{WA} = **0.0** kN

Total axial load on column; P_A = **113.0** kN

Foundation loads

Dead surcharge load; F_{Gsur} = **0.000** kN/m^2

Imposed surcharge load; F_{Qsur} = **0.000** kN/m^2

Pad footing self weight; $F_{swt} = h \times \rho_{conc}$ = **23.600** kN/m^2

Soil self weight; $F_{soil} = h_{soil} \times \rho_{soil}$ = **0.000** kN/m^2

Total foundation load; $F = A \times (F_{Gsur} + F_{Qsur} + F_{swt} + F_{soil})$ = **3[illegible]9** kN

Horizontal loading on column base

Dead horizontal load in x direction; H_{GxA} = **0.5** kN

Imposed horizontal load in x direction; H_{QxA} = **0.7** kN

Wind horizontal load in x direction; H_{WxA} = **0.0** kN

Total horizontal load in x direction; H_{xA} = **1.2** kN

Dead horizontal load in y direction; H_{GyA} = **0.0** kN

Imposed horizontal load in y direction; H_{QyA} = **0.0** kN

Wind horizontal load in y direction; H_{WyA} = **0.0** kN

Total horizontal load in y direction; H_{yA} = **0.0** kN

Moment on column base

Dead moment on column in x direction; M_{GxA} = **0.700** kNm

Imposed moment on column in x direction; M_{QxA} = **0.500** kNm

Wind moment on column in x direction; M_{WxA} = **0.000** kNm

Total moment on column in x direction; M_{xA} = **1.200** kNm

Dead moment on column in y direction; M_{GyA} = **0.000** kNm

Imposed moment on column in y direction; M_{QyA} = **0.000** kNm

Wind moment on column in y direction; M_{WyA} = **0.000** kNm

Total moment on column in y direction; M_{yA} = **0.000** kNm

Check stability against sliding

Resistance to sliding due to base friction

$H_{friction} = \max([P_{GA} + (F_{Gsur} + F_{swt} + F_{soil}) \times A], 0\ kN) \times \tan(\delta)$ = **39.2** kN

Passive pressure coefficient; $K_p = (1 + \sin(\phi')) / (1 - \sin(\phi'))$ = **2.464**

Stability against sliding in x direction

Passive resistance of soil in x direction; $H_{xpas} = 0.5 \times K_p \times (h^2 + 2 \times h \times h_{soil}) \times B \times \rho_{soil}$ = **32.0** kN

Total resistance to sliding in x direction; $H_{xres} = H_{friction} + H_{xpas}$ = **71.2** kN

PASS - Resistance to sliding is greater than horizontal load in x direction

Check stability against overturning in x direction

Total overturning moment; $M_{xOT} = M_{xA} + H_{xA}$ ´ h = **2.400** kNm

Restoring moment in x direction

Foundation loading; $M_{xsur} = A \times (F_{Gsur} + F_{swt} + F_{soil}) \times L / 2$ = **25.925** kNm

Axial loading on column; $M_{xaxial} = (P_{GA})$ ´ $(L / 2 - e_{PxA})$ = **46.800** kNm

Total restoring moment; $M_{xres} = M_{xsur} + M_{xaxial}$ = **72.725** kNm

PASS - Overturning safety factor exceeds the minimum of 1.5 in the x direction

PEPP 02 TOWERFIELDS WESTERHAM ROAD BROMLEY, BR2 6HF Email: info@Pearlepp.co.uk Website: www. pearlepp.co.uk Tel no. 02035763199	**Project:** 68 GROVE PARK RD UK	**Sheet No./Rev.** 693
	Job Ref. 2024-06- | **Structural Engineer** **MM**	**Date** **11/06/2024**

Calculate pad base reaction

Total base reaction; $T = F + P_A =$ **152.9** kN

Eccentricity of base reaction in x; $e_{Tx} = (P_A$ ´ $e_{PxA} + M_{xA} + H_{xA}$ ´ $h) / T =$ **16** mm

Eccentricity of base reaction in y; $e_{Ty} = (P_A$ ´ $e_{PyA} + M_{yA} + H_{yA}$ ´ $h) / T =$ **0** mm

Check pad base reaction eccentricity

$abs(e_{Tx}) / L + abs(e_{Ty}) / B =$ **0.012**

Base reaction acts within middle third of base

Calculate pad base pressures

$q_1 = T / A - 6$ ´ T ´ e_{Tx} / (L ´ A) - 6 ´ T ´ e_{Ty} / (B ´

A) = **83.910** kN/m^2

$q_2 = T / A - 6$ ´ T ´ e_{Tx} / (L ´ A) + 6 ´ T ´ e_{Ty} / (B ´

A) = **83.910** kN/m^2

$q_3 = T / A + 6$ ´ T ´ e_{Tx} / (L ´ A) - 6 ´ T ´ e_{Ty} / (B ´

A) = **97.018** kN/m^2

$q_4 = T / A + 6$ ´ T ´ e_{Tx} / (L ´ A) + 6 ´ T ´ e_{Ty} / (B

´ A) = **97.018** kN/m^2

Minimum base pressure; $q_{min} = min(q_1, q_2, q_3, q_4) =$ **83.910** kN/m^2

Maximum base pressure; $q_{max} = max(q_1, q_2, q_3, q_4) =$ **97.018** kN/m^2

PASS - Maximum base pressure is less than allowable bearing pressure

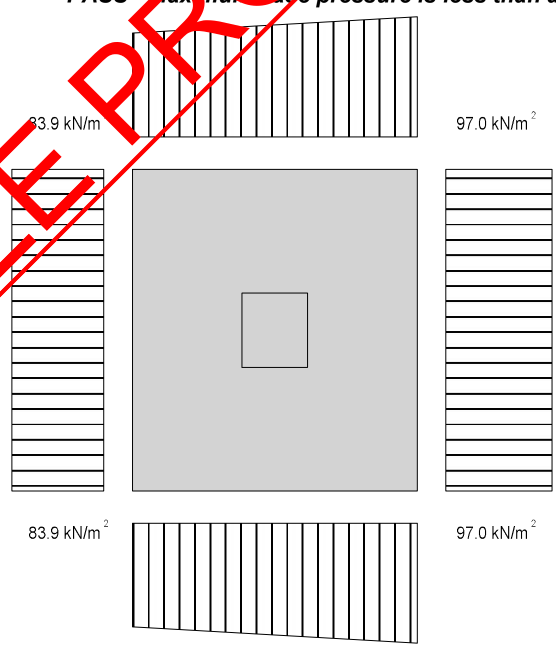

Partial safety factors for loads

Partial safety factor for dead loads; $\gamma_{fG} =$ **1.40**

Partial safety factor for imposed loads; $\gamma_{fQ} =$ **1.60**

Partial safety factor for wind loads; γ_{fW} = **0.00**

Ultimate axial loading on column

Ultimate axial load on column; $P_{uA} = P_{GA} \times \gamma_{fG} + P_{QA} \times \gamma_{fQ} + P_{WA} \times \gamma_{fW}$ = **166.4** kN

Ultimate foundation loads

Ultimate foundation load; $F_u = A \times [(F_{Gsur} + F_{swt} + F_{soil}) \times \gamma_{fG} + F_{Qsur} \times \gamma_{fQ}]$ = **55.8** kN

Ultimate horizontal loading on column

Ultimate horizontal load in x direction; $H_{xuA} = H_{GxA} \times \gamma_{fG} + H_{QxA} \times \gamma_{fQ} + H_{WxA} \times \gamma_{fW}$ = **1.8** kN

Ultimate horizontal load in y direction; $H_{yuA} = H_{GyA} \times \gamma_{fG} + H_{QyA} \times \gamma_{fQ} + H_{WyA} \times \gamma_{fW}$ = **0.0** kN

Ultimate moment on column

Ultimate moment on column in x direction; $M_{xuA} = M_{GxA} \times \gamma_{fG} + M_{QxA} \times \gamma_{fQ} + M_{WxA} \times \gamma_{fW}$ = **1.780** kNm

Ultimate moment on column in y direction; $M_{yuA} = M_{GyA} \times \gamma_{fG} + M_{QyA} \times \gamma_{fQ} + M_{WyA} \times \gamma_{fW}$ = **0.000** kNm

Calculate ultimate pad base reaction

Ultimate base reaction; $T_u = F_u + P_{uA}$ = **222.2** kN

Eccentricity of ultimate base reaction in x; $e_{Txu} = (P_{uA} \times e_{PxA} + M_{xuA} + H_{xuA} \times h) / T_u$ = **16** mm

Eccentricity of ultimate base reaction in y; $e_{Tyu} = (P_{uA} \times e_{PyA} + M_{yuA} + H_{yuA} \times h) / T_u$ = **0** mm

Calculate ultimate pad base pressures

q_{1u} = T_u/A - 6 ´ T_u ´ e_{Txu}/(L ´ A) - 6 ´ T_u ´ e_{Tyu}/(B ´ A) =

121.670 kN/m^2

q_{2u} = T_u/A - 6 ´ T_u ´ e_{Txu}/(L ´ A) + 6 ´ T_u ´ e_{Tyu}/(B ´ A) =

121.670 kN/m^2

q_{3u} = T_u/A + 6 ´ T_u ´ e_{Txu}/(L ´ A) - 6 ´ T_u ´ e_{Tyu}/(B ´ A) =

141.333 kN/m^2

q_{4u} = T_u/A + 6 ´ T_u ´ e_{Txu}/(L ´ A) + 6 ´ T_u ´ e_{Tyu}/(B ´ A) =

141.333 kN/m^2

Minimum ultimate base pressure; $q_{minu} = \min(q_{1u}, q_{2u}, q_{3u}, q_{4u})$ = **121.670** kN/m^2

Maximum ultimate base pressure; $q_{maxu} = \max(q_{1u}, q_{2u}, q_{3u}, q_{4u})$ = **141.333** kN/m^2

Calculate rate of change of base pressure in x direction

Left hand base reaction; $f_{uL} = (q_{1u} + q_{2u}) \times B / 2$ = **158.171** kN/m

Right hand base reaction; $f_{uR} = (q_{3u} + q_{4u}) \times B / 2$ = **183.733** kN/m

Length of base reaction; L_x = L = **1300** mm

Rate of change of base pressure; $C_x = (f_{uR} - f_{uL}) / L_x$ = **19.663** kN/m/m

Calculate pad lengths in x direction

Left hand length; $L_L = L / 2 + e_{PxA}$ = **650** mm

Right hand length; $L_R = L / 2 - e_{PxA}$ = **650** mm

Calculate ultimate moments in x direction

Ultimate moment in x direction; M_x = f_{uL} ´ L_L^2 / 2 + C_x ´ L_L^3 / 6 - F_u ´ L_L^2 / (2 ´ L) + H_{xuA} ´ h + M_{xuA} = **28.840** kNm

Calculate rate of change of base pressure in y direction

Top edge base reaction; $f_{uT} = (q_{2u} + q_{4u}) \times L / 2$ = **170.952** kN/m

PEPP PEARL ENGINEERS, PLANNERS & PROJECT MANAGERS 02 TOWERFIELDS WESTERHAM ROAD BROMLEY, BR2 6HF Email: info@Pearlepp.co.uk Website: www. pearlepp.co.uk Tel no. 02035763199	**Project:** 68 GROVE PARK RD UK		**Sheet No./Rev.** 695
	Job Ref. 2024-06-	**Structural Engineer** **MM**	**Date** **11/06/2024**

Bottom edge base reaction; $f_{uB} = (q_{1u} + q_{3u}) \times L / 2 =$ **170.952** kN/m

Length of base reaction; $L_y = B =$ **1300** mm

Rate of change of base pressure; $C_y = (f_{uB} - f_{uT}) / L_y =$ **0.000** kN/m/m

Calculate pad lengths in y direction

Top length; $L_T = B / 2 - e_{PyA} =$ **650** mm

Bottom length; $L_B = B / 2 + e_{PyA} =$ **650** mm

Calculate ultimate moments in y direction

Ultimate moment in y direction; $M_y = f_{uT} \times L_T^2 / 2 + C_y \times L_T^3 / 6 - F_u \times L_B^2 / (2 \times B) =$ **27.040** kNm

Material details

Characteristic strength of concrete; $f_{cu} =$ **30** N/mm^2

Characteristic strength of reinforcement; $f_y =$ **500** N/mm^2

Characteristic strength of shear reinforcement; $f_{yv} =$ **500** N/mm^2

Nominal cover to reinforcement; $c_{nom} =$ **30** mm

Moment design in x direction

Diameter of tension reinforcement; $\phi_{xB} =$ **16** mm

Depth of tension reinforcement; $d_x = h - c_{nom} - \phi_{xB} / 2 =$ **962** mm

Design formula for rectangular beams (cl 3.4.4.4)

$K_x = M_x / (B \times d_x^2 \times f_{cu}) =$ **0.001**

$K_x' = 0.156$

***$K_x < K_x'$* compression reinforcement is not required**

Lever arm; $z_x = d_x \times \min([0.5 + \sqrt{(0.25 - K_x / 0.9)}], 0.95) =$ **914** mm

Area of tension reinforcement required; $A_{s\_x\_req} = M_x / (0.87 \times f_y \times z_x) =$ **73** mm^2

Minimum area of tension reinforcement; $A_{s\_x\_min} = 0.0013 \times B \times h =$ **1690** mm^2

Tension reinforcement provided; **12 No. 16 dia. bars bottom (125 centres)**

Area of tension reinforcement provided; $A_{s\_xB\_prov} = N_{xB} \times \pi \times \phi_{xB}^2 / 4 =$ **2413** mm^2

PASS - Tension reinforcement provided exceeds tension reinforcement required

Moment design in y direction

Diameter of tension reinforcement; $\phi_{yB} =$ **16** mm

Depth of tension reinforcement; $d_y = h - c_{nom} - \phi_{xB} - \phi_{yB} / 2 =$ **946** mm

Design formula for rectangular beams (cl 3.4.4.4)

$K_y = M_y / (L \times d_y^2 \times f_{cu}) =$ **0.001**

$K_y' = 0.156$

***$K_y < K_y'$* compression reinforcement is not required**

Lever arm; $z_y = d_y \times \min([0.5 + \sqrt{(0.25 - K_y / 0.9)}], 0.95) =$ **899** mm

Area of tension reinforcement required; $A_{s\_y\_req} = M_y / (0.87 \times f_y \times z_y) =$ **69** mm^2

Minimum area of tension reinforcement; $A_{s\_y\_min} = 0.0013 \times L \times h =$ **1690** mm^2

Tension reinforcement provided; **12 No. 16 dia. bars bottom (125 centres)**

Area of tension reinforcement provided; $A_{s\_yB\_prov} = N_{yB} \times \pi \times \phi_{yB}^2 / 4 =$ **2413** mm^2

PASS - Tension reinforcement provided exceeds tension reinforcement required

Calculate ultimate punching shear force at face of column

Ultimate pressure for punching shear; $q_{puA} = q_{1u}+[(L/2+e_{PxA}-l_A/2)+(l_A)/2] \times C_x/B-[(B/2+e_{PyA}-b_A/2)+(b_A)/2] \times C_y/L$ = **131.502** kN/m^2

Average effective depth of reinforcement; $d = (d_x + d_y) / 2$ = **954** mm

Area loaded for punching shear at column; $A_{pA} = (l_A) \times (b_A)$ = **0.090** m^2

Length of punching shear perimeter; $u_{pA} = 2 \times (l_A)+2 \times (b_A)$ = **1200** mm

Ultimate shear force at shear perimeter; $V_{puA} = P_{uA} + (F_u / A - q_{puA}) \times A_{pA}$ = **157.532** kN

Effective shear force at shear perimeter; $V_{puAeff} = V_{puA} \times [1+1.5 \times abs(M_{xuA})/(V_{puA} \times (b_A))]$ = **166.438** kN

Punching shear stresses at face of column (cl 3.7.7.2)

Design shear stress; $v_{puA} = V_{puAeff} / (u_{pA} \times d)$ = **0.145** N/mm^2

Allowable design shear stress; $v_{max} = \min(0.8 N/mm^2 \times \sqrt{(f_{cu} / 1 N/mm^2)}, 5 N/mm^2)$ = **4.382** N/mm^2

PASS - Design shear stress is less than allowable design shear stress

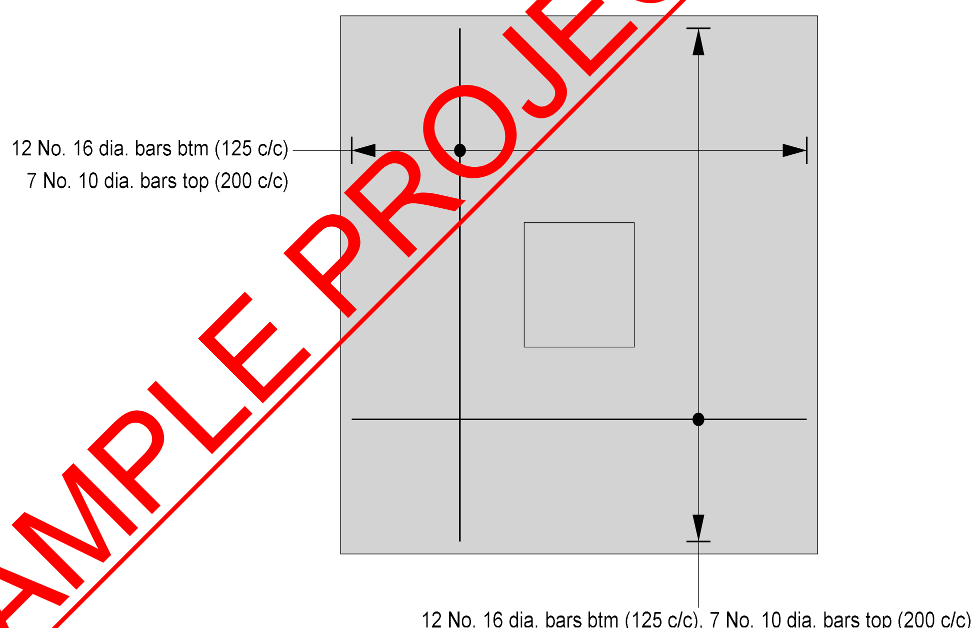

- **Isolated Reinforced Concrete Pad Footing 4**

PAD FOOTING ANALYSIS AND DESIGN (BS8110-1:1997)

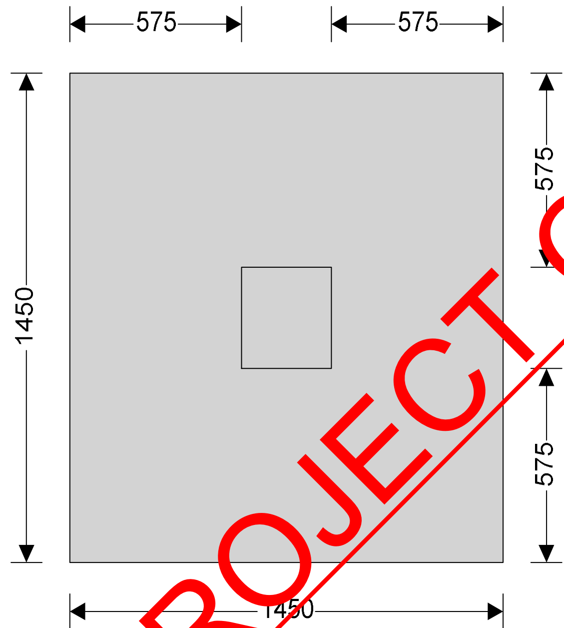

Pad footing details

Length of pad footing;	L = **1450** mm
Width of pad footing;	B = **1450** mm
Area of pad footing;	$A = L \times B$ = **2.103** m^2
Depth of pad footing;	h = **1000** mm
Depth of soil over pad footing;	h_{soil} = **0** mm
Density of concrete;	ρ_{conc} = **23.6** kN/m^3

Column details

Column base length;	l_A = **300** mm
Column base width;	b_A = **300** mm
Column eccentricity in x;	e_{PxA} = **0** mm
Column eccentricity in y;	e_{PyA} = **0** mm

Soil details

Density of soil;	ρ_{soil} = **20.0** kN/m^3
Design shear strength;	ϕ' = **25.0** deg
Design base friction;	δ = **19.3** deg
Allowable bearing pressure;	$P_{bearing}$ = **100** kN/m^2

Axial loading on column

Dead axial load on column;	P_{GA} = **91.0** kN
Imposed axial load on column;	P_{QA} = **53.0** kN

Wind axial load on column; P_{WA} = **0.0** kN

Total axial load on column; P_A = **144.0** kN

Foundation loads

Dead surcharge load; F_{Gsur} = **0.000** kN/m^2

Imposed surcharge load; F_{Qsur} = **0.000** kN/m^2

Pad footing self weight; $F_{swt} = h \times \rho_{conc}$ = **23.600** kN/m^2

Soil self weight; $F_{soil} = h_{soil} \times \rho_{soil}$ = **0.000** kN/m^2

Total foundation load; $F = A \times (F_{Gsur} + F_{Qsur} + F_{swt} + F_{soil})$ = **4[illegible]6** kN

Horizontal loading on column base

Dead horizontal load in x direction; H_{GxA} = **0.5** kN

Imposed horizontal load in x direction; H_{QxA} = **0.7** kN

Wind horizontal load in x direction; H_{WxA} = **0.0** kN

Total horizontal load in x direction; H_{xA} = **1.2** kN

Dead horizontal load in y direction; H_{GyA} = **0.0** kN

Imposed horizontal load in y direction; H_{QyA} = **0.0** kN

Wind horizontal load in y direction; H_{WyA} = **0.0** kN

Total horizontal load in y direction; H_{yA} = **0.0** kN

Moment on column base

Dead moment on column in x direction; M_{GxA} = **0.700** kNm

Imposed moment on column in x direction; M_{QxA} = **0.500** kNm

Wind moment on column in x direction; M_{WxA} = **0.000** kNm

Total moment on column in x direction; M_{xA} = **1.200** kNm

Dead moment on column in y direction; M_{GyA} = **0.000** kNm

Imposed moment on column in y direction; M_{QyA} = **0.000** kNm

Wind moment on column in y direction; M_{WyA} = **0.000** kNm

Total moment on column in y direction; M_{yA} = **0.000** kNm

Check stability against sliding

Resistance to sliding due to base friction

$H_{friction} = \max([P_{GA} + (F_{Gsur} + F_{swt} + F_{soil}) \times A], 0\ kN) \times \tan(\delta)$ = **49.2** kN

Passive pressure coefficient; $K_p = (1 + \sin(\phi')) / (1 - \sin(\phi'))$ = **2.464**

Stability against sliding in x direction

Passive resistance of soil in x direction; $H_{xpas} = 0.5 \times K_p \times (h^2 + 2 \times h \times h_{soil}) \times B \times \rho_{soil}$ = **35.7** kN

Total resistance to sliding in x direction; $H_{xres} = H_{friction} + H_{xpas}$ = **85.0** kN

PASS - Resistance to sliding is greater than horizontal load in x direction

Check stability against overturning in x direction

Total overturning moment; $M_{xOT} = M_{xA} + H_{xA}$ ´ h = **2.400** kNm

Restoring moment in x direction

Foundation loading; $M_{xsur} = A \times (F_{Gsur} + F_{swt} + F_{soil}) \times L / 2$ = **35.974** kNm

Axial loading on column; $M_{xaxial} = (P_{GA})$ ´ $(L / 2 - e_{PxA})$ = **65.975** kNm

Total restoring moment; $M_{xres} = M_{xsur} + M_{xaxial}$ = **101.949** kNm

PASS - Overturning safety factor exceeds the minimum of 1.5 in the x direction

PEPP PEARL ENGINEERS, PLANNERS & PROJECT MANAGERS 02 TOWERFIELDS WESTERHAM ROAD BROMLEY, BR2 6HF Email: info@Pearlepp.co.uk Website: www. pearlepp.co.uk Tel no. 02035763199	**Project:** 68 GROVE PARK RD UK		**Sheet No./Rev.** 699
	Job Ref. 2024-06-	**Structural Engineer** **MM**	**Date** **11/06/2024**

Calculate pad base reaction

Total base reaction; $T = F + P_A$ = **193.6** kN

Eccentricity of base reaction in x; $e_{Tx} = (P_A$ ´ $e_{PxA} + M_{xA} + H_{xA}$ ´ $h) / T$ = **12** mm

Eccentricity of base reaction in y; $e_{Ty} = (P_A$ ´ $e_{PyA} + M_{yA} + H_{yA}$ ´ $h) / T$ = **0** mm

Check pad base reaction eccentricity

$abs(e_{Tx}) / L + abs(e_{Ty}) / B$ = **0.009**

Base reaction acts within middle third of base

Calculate pad base pressures

$q_1 = T / A - 6$ ´ T ´ $e_{Tx} / (L$ ´ $A) - 6$ ´ T ´ $e_{Ty} / (B$ ´

A) = **87.366** kN/m^2

$q_2 = T / A - 6$ ´ T ´ $e_{Tx} / (L$ ´ $A) + 6$ ´ T ´ $e_{Ty} / (B$ ´

A) = **87.366** kN/m^2

$q_3 = T / A + 6$ ´ T ´ $e_{Tx} / (L$ ´ $A) - 6$ ´ T ´ $e_{Ty} / (B$ ´

A) = **96.813** kN/m^2

$q_4 = T / A + 6$ ´ T ´ $e_{Tx} / (L$ ´ $A) + 6$ ´ T ´ $e_{Ty} / (B$

´ A) = **96.813** kN/m^2

Minimum base pressure; $q_{min} = min(q_1, q_2, q_3, q_4)$ = **87.366** kN/m^2

Maximum base pressure; $q_{max} = max(q_1, q_2, q_3, q_4)$ = **96.813** kN/m^2

PASS - Maximum base pressure is less than allowable bearing pressure

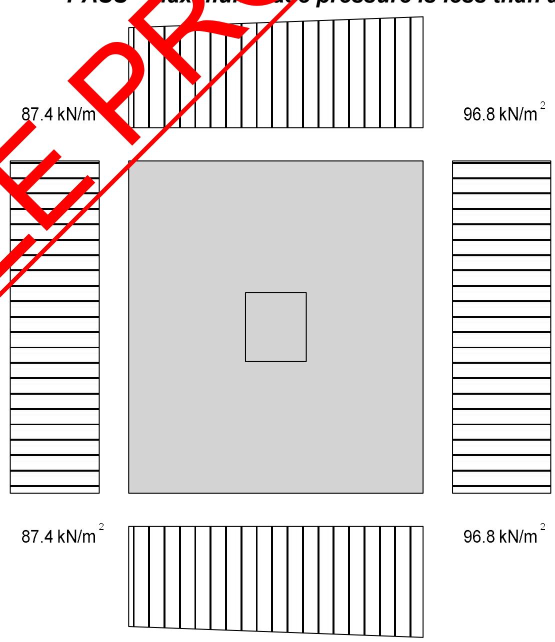

Partial safety factors for loads

Partial safety factor for dead loads; γ_{fG} = **1.40**

Partial safety factor for imposed loads; γ_{fQ} = **1.60**

PEPP 02 TOWERFIELDS WESTERHAM ROAD BROMLEY, BR2 6HF Email: info@Pearlepp.co.uk Website: www. pearlepp.co.uk Tel no. 02035763199	**Project:** 68 GROVE PARK RD UK		**Sheet No./Rev.** 700
	Job Ref. 2024-06-	**Structural Engineer** **MM**	**Date** **11/06/2024**

Partial safety factor for wind loads; γ_{fW} = **0.00**

Ultimate axial loading on column

Ultimate axial load on column; $P_{uA} = P_{GA} \times \gamma_{fG} + P_{QA} \times \gamma_{fQ} + P_{WA} \times \gamma_{fW}$ = **212.2** kN

Ultimate foundation loads

Ultimate foundation load; $F_u = A \times [(F_{Gsur} + F_{swt} + F_{soil}) \times \gamma_{fG} + F_{Qsur} \times \gamma_{fQ}]$ = **69.5** kN

Ultimate horizontal loading on column

Ultimate horizontal load in x direction; $H_{xuA} = H_{GxA} \times \gamma_{fG} + H_{QxA} \times \gamma_{fQ} + H_{WxA} \times \gamma_{fW}$ = **1.3** kN

Ultimate horizontal load in y direction; $H_{yuA} = H_{GyA} \times \gamma_{fG} + H_{QyA} \times \gamma_{fQ} + H_{WyA} \times \gamma_{fW}$ = **0.0** kN

Ultimate moment on column

Ultimate moment on column in x direction; $M_{xuA} = M_{GxA} \times \gamma_{fG} + M_{QxA} \times \gamma_{fQ} + M_{WxA} \times \gamma_{fW}$ = **1.780** kNm

Ultimate moment on column in y direction; $M_{yuA} = M_{GyA} \times \gamma_{fG} + M_{QyA} \times \gamma_{fQ} + M_{WyA} \times \gamma_{fW}$ = **0.000** kNm

Calculate ultimate pad base reaction

Ultimate base reaction; $T_u = F_u + P_{uA}$ = **281.7** kN

Eccentricity of ultimate base reaction in x; $e_{Txu} = (P_{uA} \times e_{PxA} + M_{xuA} + H_{xuA} \times h) / T_u$ = **13** mm

Eccentricity of ultimate base reaction in y; $e_{Tyu} = (P_{uA} \times e_{PyA} + M_{yuA} + H_{yuA} \times h) / T_u$ = **0** mm

Calculate ultimate pad base pressures

$q_{1u} = T_u/A - 6 ´ T_u ´ e_{Txu}/(L ´ A) - 6 ´ T_u ´ e_{Tyu}/(B ´ A)$ =

126.882 kN/m^2

$q_{2u} = T_u/A - 6 ´ T_u ´ e_{Txu}/(L ´ A) + 6 ´ T_u ´ e_{Tyu}/(B ´ A)$ =

126.882 kN/m^2

$q_{3u} = T_u/A + 6 ´ T_u ´ e_{Txu}/(L ´ A) - 6 ´ T_u ´ e_{Tyu}/(B ´ A)$ =

141.053 kN/m^2

$q_{4u} = T_u/A + 6 ´ T_u ´ e_{Txu}/(L ´ A) + 6 ´ T_u ´ e_{Tyu}/(B ´ A)$ =

141.053 kN/m^2

Minimum ultimate base pressure; $q_{minu} = \min(q_{1u}, q_{2u}, q_{3u}, q_{4u})$ = **126.882** kN/m^2

Maximum ultimate base pressure; $q_{maxu} = \max(q_{1u}, q_{2u}, q_{3u}, q_{4u})$ = **141.053** kN/m^2

Calculate rate of change of base pressure in x direction

Left hand base reaction; $f_{uL} = (q_{1u} + q_{2u}) \times B / 2$ = **183.979** kN/m

Right hand base reaction; $f_{uR} = (q_{3u} + q_{4u}) \times B / 2$ = **204.526** kN/m

Length of base reaction; $L_x = L$ = **1450** mm

Rate of change of base pressure; $C_x = (f_{uR} - f_{uL}) / L_x$ = **14.170** kN/m/m

Calculate pad lengths in x direction

Left hand length; $L_L = L / 2 + e_{PxA}$ = **725** mm

Right hand length; $L_R = L / 2 - e_{PxA}$ = **725** mm

Calculate ultimate moments in x direction

Ultimate moment in x direction; $M_x = f_{uL} ´ L_L^2 / 2 + C_x ´ L_L^3 / 6 - F_u ´ L_L^2 / (2 ´ L) + H_{xuA} ´ h + M_{xuA}$ = **40.261** kNm

Calculate rate of change of base pressure in y direction

Top edge base reaction; $f_{uT} = (q_{2u} + q_{4u}) \times L / 2$ = **194.253** kN/m

Bottom edge base reaction; $f_{uB} = (q_{1u} + q_{3u}) \times L / 2 =$ **194.253** kN/m

Length of base reaction; $L_y = B =$ **1450** mm

Rate of change of base pressure; $C_y = (f_{uB} - f_{uT}) / L_y =$ **0.000** kN/m/m

Calculate pad lengths in y direction

Top length; $L_T = B / 2 - e_{PyA} =$ **725** mm

Bottom length; $L_B = B / 2 + e_{PyA} =$ **725** mm

Calculate ultimate moments in y direction

Ultimate moment in y direction; $M_y = f_{uT} \times L_T^2 / 2 + C_y \times L_T^3 / 6 - F_u \times L_B^2 / (2 \times B) =$ **38.461** kNm

Material details

Characteristic strength of concrete; $f_{cu} =$ **30** N/mm^2

Characteristic strength of reinforcement; $f_y =$ **500** N/mm^2

Characteristic strength of shear reinforcement; $f_{yv} =$ **500** N/mm^2

Nominal cover to reinforcement; $c_{nom} =$ **30** mm

Moment design in x direction

Diameter of tension reinforcement; $\phi_{xB} =$ **16** mm

Depth of tension reinforcement; $d_x = h - c_{nom} - \phi_{xB} / 2 =$ **962** mm

Design formula for rectangular beams (cl 3.4.4.4)

$K_x = M_x / (B \times d_x^2 \times f_{cu}) =$ **0.001**

$K_x' = 0.156$

$K_x < K_x'$ compression reinforcement is not required

Lever arm; $z_x = d_x \times \min([0.5 + \sqrt{(0.25 - K_x / 0.9)}], 0.95) =$ **914** mm

Area of tension reinforcement required; $A_{s\_x\_req} = M_x / (0.87 \times f_y \times z_x) =$ **101** mm^2

Minimum area of tension reinforcement; $A_{s\_x\_min} = 0.0013 \times B \times h =$ **1885** mm^2

Tension reinforcement provided; **12 No. 16 dia. bars bottom (125 centres)**

Area of tension reinforcement provided; $A_{s\_xB\_prov} = N_{xB} \times \pi \times \phi_{xB}^2 / 4 =$ **2413** mm^2

PASS - Tension reinforcement provided exceeds tension reinforcement required

Moment design in y direction

Diameter of tension reinforcement; $\phi_{yB} =$ **16** mm

Depth of tension reinforcement; $d_y = h - c_{nom} - \phi_{xB} - \phi_{yB} / 2 =$ **946** mm

Design formula for rectangular beams (cl 3.4.4.4)

$K_y = M_y / (L \times d_y^2 \times f_{cu}) =$ **0.001**

$K_y' = 0.156$

$K_y < K_y'$ compression reinforcement is not required

Lever arm; $z_y = d_y \times \min([0.5 + \sqrt{(0.25 - K_y / 0.9)}], 0.95) =$ **899** mm

Area of tension reinforcement required; $A_{s\_y\_req} = M_y / (0.87 \times f_y \times z_y) =$ **98** mm^2

Minimum area of tension reinforcement; $A_{s\_y\_min} = 0.0013 \times L \times h =$ **1885** mm^2

Tension reinforcement provided; **12 No. 16 dia. bars bottom (125 centres)**

Area of tension reinforcement provided; $A_{s\_yB\_prov} = N_{yB} \times \pi \times \phi_{yB}^2 / 4 =$ **2413** mm^2

PASS - Tension reinforcement provided exceeds tension reinforcement required

PEPP
PEARL ENGINEERS, PLANNERS & PROJECT MANAGERS
02 TOWERFIELDS WESTERHAM ROAD
BROMLEY, BR2 6HF
Email: info@Pearlepp.co.uk
Website: www. pearlepp.co.uk
Tel no. 02035763199

Calculate ultimate punching shear force at face of column

Ultimate pressure for punching shear; $q_{puA} = q_{1u}+[(L/2+e_{PxA}-l_A/2)+(l_A)/2]$ ´ $C_x/B-[(B/2+e_{PyA}-b_A/2)+(b_A)/2]$ ´ C_y/L = **133.967** kN/m^2

Average effective depth of reinforcement; $d = (d_x + d_y) / 2$ = **954** mm

Area loaded for punching shear at column; $A_{pA} = (l_A)$ ´ (b_A) = **0.090** m^2

Length of punching shear perimeter; $u_{pA} = 2$ ´ $(l_A)+2$ ´ (b_A) = **1200** mm

Ultimate shear force at shear perimeter; $V_{puA} = P_{uA} + (F_u / A - q_{puA}) \times A_{pA}$ = **203.117** kN

Effective shear force at shear perimeter; $V_{puAeff} = V_{puA}$ ´ $[1+1.5$ ´ $abs(M_{xuA})/(V_{puA}$ ´ $(b_A))]$ = **212.017** kN

Punching shear stresses at face of column (cl 3.7.7.2)

Design shear stress; $v_{puA} = V_{puAeff} / (u_{pA} \times d)$ = **0.185** N/mm^2

Allowable design shear stress; $v_{max} = \min(0.8 N/mm^2 \times \sqrt{(f_{cu} / 1 N/mm^2)}, 5 N/mm^2)$ = **4.382** N/mm^2

PASS - Design shear stress is less than allowable design shear stress