NHTSA FIELD CRASH INVESTIGATIONS

Digital Photography

U.S. Department of Transportation
National Highway Traffic Safety Administration
National Center for Statistics and Analysis
Washington, DC 20590

2018 Edition

NHTSA Field Crash Investigations

For NHTSA Field Crash Investigation use only – distribution not authorized.

United States Department of Transportation
National Highway Traffic Safety Administration
National Center for Statistics and Analysis
Washington, DC 20590

Table of Contents

Introduction……. 4

Scene Photography
General ……. 5
Physical Evidence Present……. 6
Rollover and Fixed Object……. 8
Fixed Object and Guardrail……. 9
Evidence Not Present……. 14

Vehicle Exterior Photography
Frontal Impact……. 15
Rear Impact……. 18
Side Impact…….. 21
Rollover……. 24
Fully Repaired……. 28
Overhead…….. 29
Tires……... 30
Fuel System…….. 31

Vehicle Interior Photography
Occupant Compartment…….. 32
Crash Avoidance……. 37
EDR……. 37
Air Bags…….. 38
Child Restraints……. 39

Appendix
Guidelines for sanitization……. 41
Guidelines for graphic images……. 43
Guidelines for outside source images……. 43
String Line Measurement Photography…….. 44

Introduction

The Digital Photography Guideline was developed to provide a reference for the NHTSA field Crash Technicians/Investigators taking digital images during scene and vehicle inspections. The images provided in the case are the only visual reference for the case reviewer, NHTSA and ultimately the data user. Consequently, the images must be complete, concise, and as uniform as possible. The cameras selected for field investigations are equipped with an LCD monitor, allowing the opportunity to preview the images immediately. Use of the monitor is strongly recommended to ensure quality photographic documentation. There may be times when a photograph's subject is best documented by rotating the camera; it is important to understand the framing and content of each required photo in order to obtain the best documentation possible. The important thing to remember is to rotate any images in the editing software before sanitizing them.

THE STANDARD SETTING FOR DIGITAL IMAGES IS M2 (1600 X 1200). TO ENSURE BOTH ADEQUATE DETAIL AND MANAGEABLE FILE SIZE, CAPTURE CASE IMAGES AS CLOSE AS POSSIBLE TO THIS SETTING.

This document is designed to:

- Assist in obtaining the minimum acceptable number of images to report crash data. Be aware that there are many unusual or special circumstances that will require additional images.

- Detail a methodology to obtain all required views efficiently and effectively.

Section 1 "Scene Photography" contains general instructions regarding crash scene photography from the vehicle's pre-impact travel path to the final rest position. Instructions are provided for both the presence of physical evidence and the absence of physical evidence.

Section 2 "Vehicle Exterior Photography" and Section 3 "Vehicle Interior Photography" contain specific instructions regarding front, rear and side impacts, and rollovers, for both exterior and interior images. For vehicles that sustain multiple impacts, one or more of the specific instructions may apply.

Subject-specific close-up images will be necessary to document certain items. Prior to taking close-up images, images should be taken to show the perspective of the close-up and the location of the subject.

WHEN TAKING CLOSE-UPS IN THE MACRO SETTING, TURN THE FLASH OFF.

This guideline is formatted such that it can be easily revised as necessary to ensure it meets the needs of NHTSA. Comments regarding changes to this document should be forwarded to the Zone Center and/or NHTSA.

Section One

Scene Photography

General

Crash scene photography should depict each involved vehicle's pre-impact path of travel (prior to the critical event), point of impact and post-impact trajectory to final rest. In general, each pre-impact image should portray the driver's view. This may necessitate positioning ones stance and camera level to the approximate driver's view in the travel lane as demonstrated in **Figure 1**. Point of impact and final rest images should be taken from a standing position to better capture physical evidence.

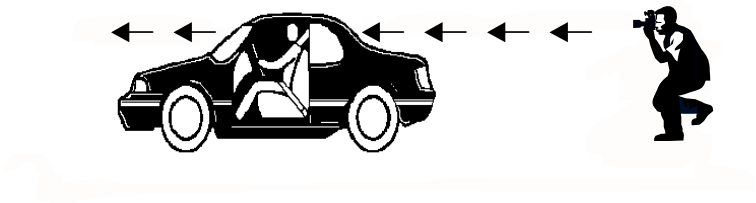

FIGURE 1 Scope of vision

For the pre-impact path of travel, photographs should capture five seconds of the precrash scene prior to the first harmful event. To determine the appropriate distance for the first precrash photo, estimate the vehicle travel speed from the police report or posted speed limit. Locate the speed on the chart shown in **Figure 2**. For example, on a 30 MPH roadway a vehicle travels roughly 44 feet per second. To capture five seconds of precrash travel, the images would start 220 feet from the first harmful event (5 seconds x 44 feet per second).

Miles Per Hour	Feet per Second
5	7
10	15
20	29
30	44
40	59
50	73
60	88
70	103
80	117

FIGURE 2 Feet per second

Images must also include all physical evidence and applicable traffic control devices. The procedures for photographing scenes with and without physical evidence follow.

Evidence Present

When physical evidence is present, take a minimum of three approach images starting five seconds prior to the first harmful event for each vehicle. To determine the interval between the three approach images, divide the total distance by three. Using the example from **Figure 2**, divide the total distance of 220 feet by 3. The distance between the three approach shots should be approximately 73 feet (estimating between 70 to 75 feet is acceptable). The last of the approach images should cover the beginning of physical evidence. The images should enable the capture of the complete trafficway including:

- Roadways, lane lines
- Roadsides, medians, curbs, shoulders
- Travel lanes, turn lanes, parking lanes
- Pertinent traffic control devices and regulatory signs

When physical evidence is present (e.g., skid marks), images are required showing its beginning, path and endpoint(s). These images should be obtained by standing in an upright position (**Figure 3**). Begin approximately 15 feet from the beginning of the evidence and continue forward at close intervals (generally 20-30 feet), following the vehicle's estimated CG travel path. Greater intervals are acceptable for lengthy scenes where minimal variation in the evidence (i.e. slight yawing) is present. Closer intervals may be required for complex scenes. Frame each image to ensure all possible evidence is visible and that the images overlap, allowing for a continuous sequence.

HIGHLIGHT SCENE EVIDENCE WITH SPRAY CHALK BEFORE TAKING SCENE PHOTOS.

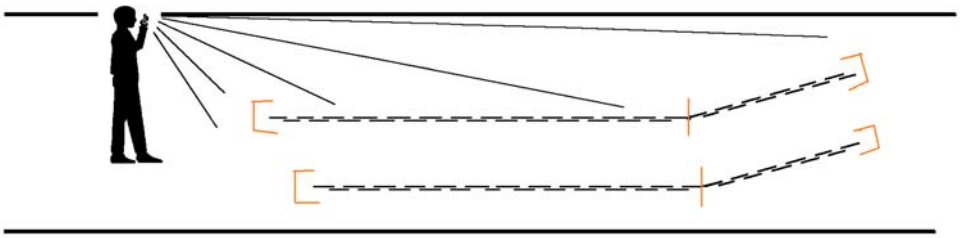

FIGURE 3 Physical evidence; beginning and travel path

An image that captures the entire point(s) of impact for each vehicle should be taken in an upright position (**Figure 4**). This image should be taken approximately 10 feet prior to the point of impact and should be properly framed to ensure that all evidence is visible.

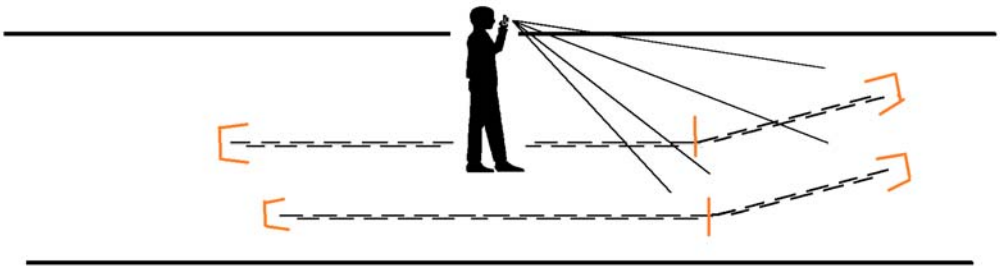

FIGURE 4 Point of impact

Include close-up views of noteworthy evidence (e.g., roadway gouges, scuffs, fluid spills) at the point of impact. Close-ups of objects contacted should be preceded by an overview of the impacted area with subsequent close-up images. Whenever possible, the overview image should include a visual reference (i.e., sign, pole, horizon) and should be taken from the same angle/direction as the close-up image.

Obtain sequential images following the vehicle's post-impact trajectory taken at intervals sufficient to capture the post impact path of travel. Note: close-up images are required for any subsequent objects struck between the initial point of impact and the final rest position.

An image that captures the final rest position showing all related physical evidence (e.g., tire prints, spills, scuff mark endings) should be taken approximately 10 feet from the final rest position as shown in **Figure 5**.

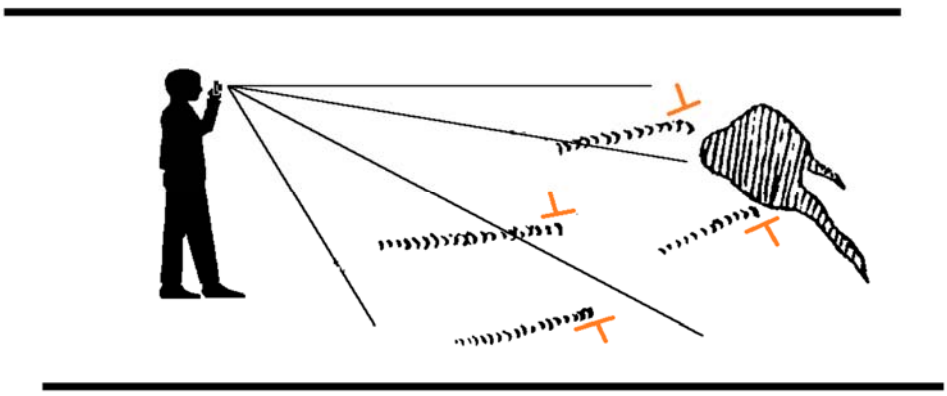

FIGURE 5 Final rest

Obtain a look-back image from both the impact and final rest positions (**Figure 6**). This view should be taken approximately 10 feet past the final rest position looking back at the vehicle's trajectory and should include the final rest position. If numerous objects are struck between the initial point of impact and the final rest position, look-backs from each struck object should be taken. Additional look-back views showing pre-impact travel lanes are required if they are not covered in the look-back from impact.

PHOTOGRAPHIC SCENE DOCUMENTATION IS REQUIRED FOR EACH VEHICLE INVOLVED IN THE CRASH. CATEGORIZATION CAN BE SIMPLIFIED BY TAKING THE IMAGES IN THE ORDER DESCRIBED ABOVE.

FIGURE 6 Look-back final rest

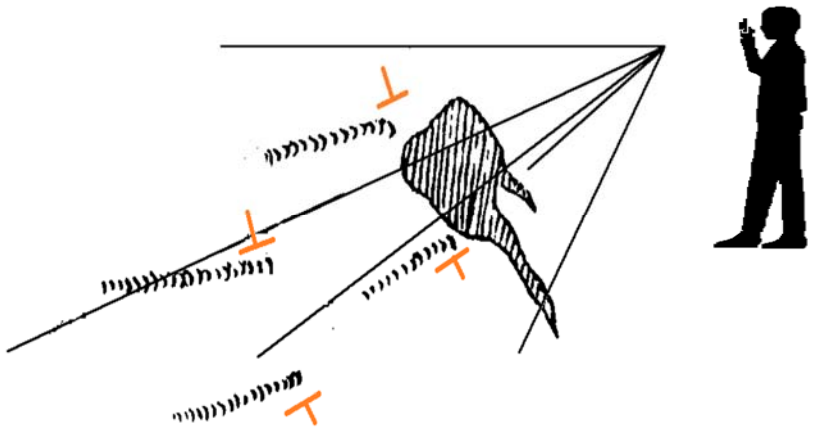

Rollover

In cases where a vehicle rolls over on the road or departs the roadway and subsequently rolls over, the same scene protocols are applicable.

For on-road rollovers photographic coverage should include:

- Path of travel
- Pre-roll trajectory
- Trip point or rollover initiation area
- Path to final rest
- Look-back from final rest
- Look-back from trip point

For rollovers off-road, in addition to the pre-impact trajectory, include

- Path of travel
- Pre-roll trajectory
- Location of roadway departure
- Trip point or rollover initiation area
- Path to final rest
- Look-back from final rest
- Look-back from trip point

Include one image that captures both the trip point/roll initiation area and the final rest area. All relevant evidence - gouges, scrapes, furrows, and debris - should be highlighted. For some rollovers or roadside departures, it may be necessary to initiate the photographic documentation early enough in the pre-crash sequence to capture the approximate location of control loss or any characteristics of the physical plant that may have contributed to the crash.

IMAGES SHOULD BE TAKEN ALONG THE PATH OF THE VEHICLE'S CENTER OF GRAVITY

Fixed Object Impact

For impacts involving a roadside fixed object(s), the photographic coverage must include the pre-impact trajectory, the point of roadway departure, an overview of the impact area, and close-up images of object(s) impacted. Additional physical evidence and final rest positions should be photographed as outlined previously. Following the vehicle's path of approach, obtain an overview image for each impact area, followed by close-up images for each roadside object struck. **Close-up views are required and should be taken from the same angle as the overview image.** If numerous objects were struck, look backs from each struck object should also be obtained. If the object struck is a small cluster of trees or other *closely* positioned objects, one look-back image is adequate.

WHEN PHOTOGRAPHING A STRUCK OBJECT, CLOSE-UP VIEWS SHOULD INCLUDE A VERTICAL REFERENCE ROD

First Fixed Object Impact

In addition to the images above, the first struck object requires additional images showing longitudinal and lateral views of the object depicted in **Figure 7** and include:

- The impacted object's parallel relationship to the road
- The impacted object's perpendicular relationship to the road

Image No.	Description
1-3.	Five seconds of precrash travel in intervals described in the General section.
4.	Image at the location where the vehicle departed the road edge, taken in the path toward the struck object.
5.	Image taken at the point of impact with the struck object.
6.	Taken from a position opposite of image 5, capture a look-back image of the vehicle's point of impact with the struck object
7.	In the direction of the vehicle's post impact trajectory, photograph the final rest location of the vehicle.
8.	Taken from a position opposite of image 7, capture a look-back image of the vehicle's final rest.
9.	Photograph showing the perpendicular relationship of the struck object to the road. This image should capture from the edge of the road to the struck object.
10.	Close-up view of the struck object taken in the same perpendicular-to-road alignment as image 9.

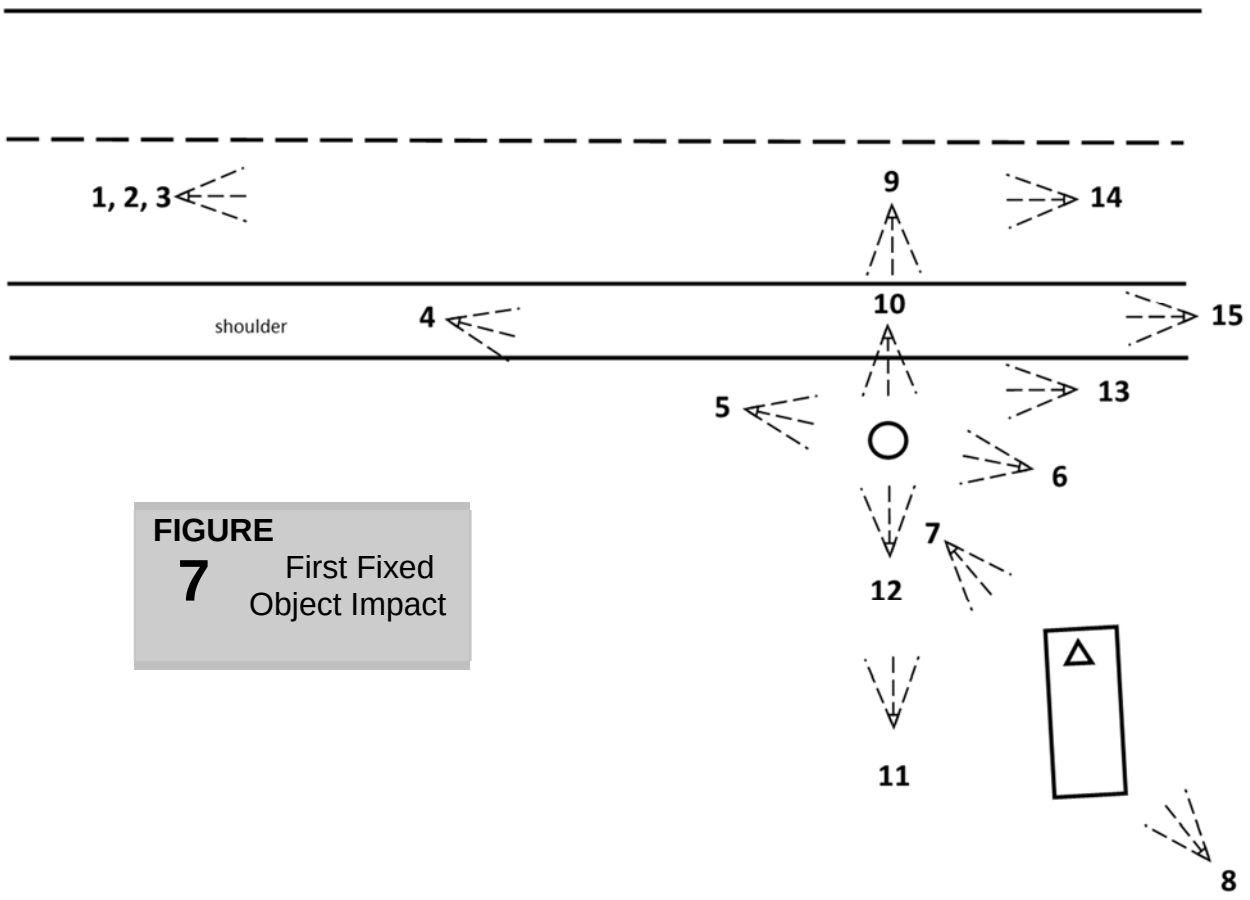

FIGURE 7 First Fixed Object Impact

Image No.	Description
11.	Photograph showing the perpendicular relationship of the struck object to the road. Image is taken from a position opposite of image 9, capturing the struck object in a view toward the roadway.
12.	Close-up view of the struck object taken in the same roadway-facing alignment as image 11.
13.	Image showing the struck object's parallel relationship to the road. Image is taken parallel to the road so that both the struck object and the road edge are visible. Note: the further the object is off the road, the further away the image will need to be taken to capture both the struck object and the road edge.
14.	Lookback image showing the vehicle's pre-event path of travel.
15.	Lookback image showing the road edge, taken in the direction of the point of road departure. This image is captured 30 meters past the struck object.

Guardrail Impact Head Struck

Although a guardrail is a fixed object, it requires even further photographic coverage than other struck objects. These images are illustrated in **Figure 8** and are required any time a guardrail terminal impact head is struck – it does not have to be the first object struck. These images must include:

- Image of the terminal impact head
- Overhead views of all damaged and missing posts

Image No.	Description
1-3.	Five seconds of precrash travel in intervals described in the General section.
4.	Image at the location where the vehicle departed the road edge, taken in the path toward the terminal impact head struck by the vehicle.
5.	Image of the point of impact with the guardrail terminal impact head. The impact head is marked with black and yellow diagonal stripes.
6.	Taken from a position opposite of image 5, capture a look-back image of the vehicle's point of impact with the terminal impact head.

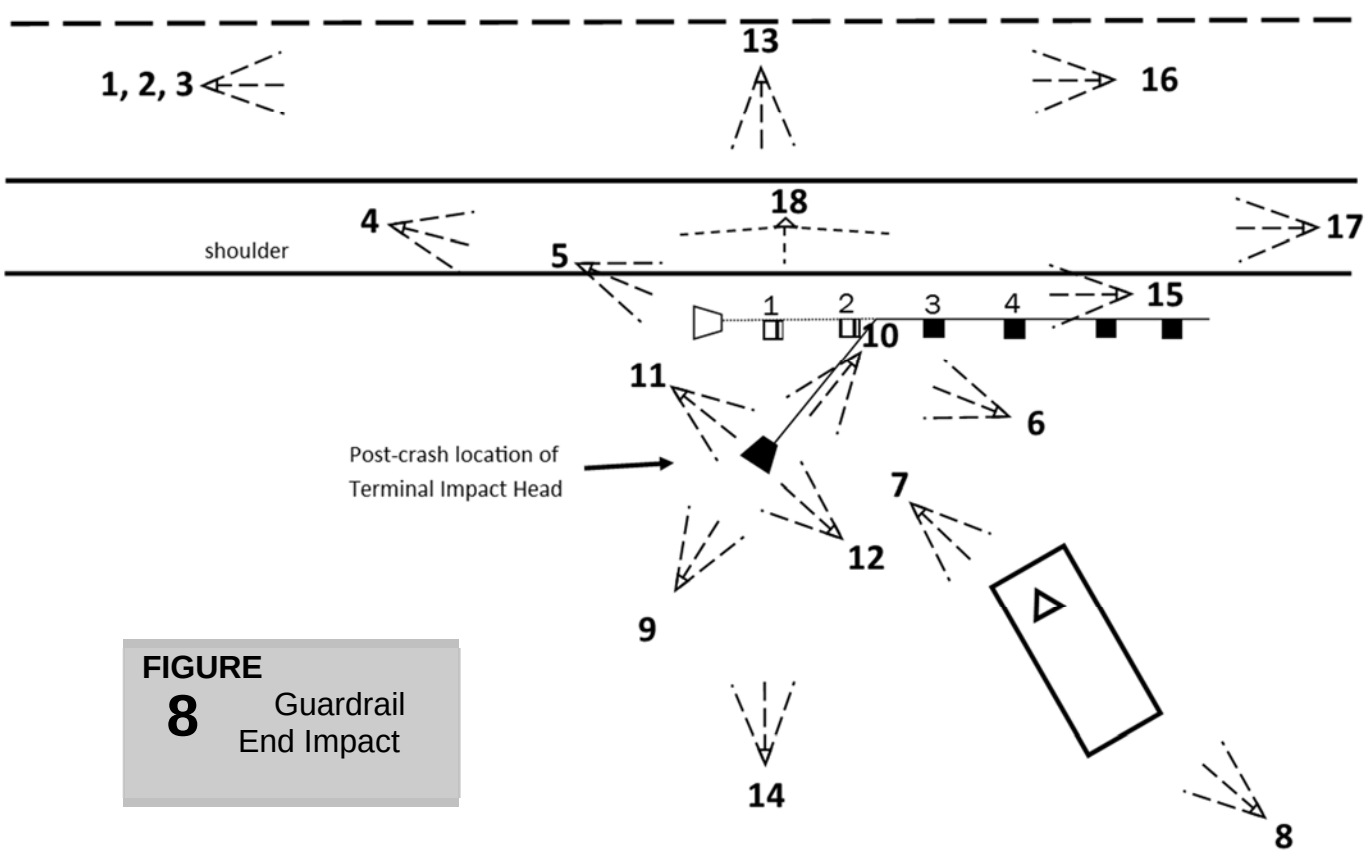

FIGURE 8 Guardrail End Impact

Image No.	Description
7.	In the direction of the vehicle's post impact trajectory, photograph the final rest location of the vehicle.
8.	Taken from a position opposite of image 7, capture a look-back image of the vehicle's final rest.
9.	Photograph the terminal impact head in its damaged location; several images may be needed if the head sustained extensive damage. If the terminal impact head has already been repaired or replaced, take the image of the repaired head.
10.	Lookback image of the terminal impact head taken opposite of image 9. Capture from the point where the rail attaches to the impact head structure to the back of the impact head.
11.	View of the terminal impact head from the side that faced the road. If the head has been repaired or replaced, take an image of the side of the repaired head that faces the road.
12.	View of the terminal impact head from the side that faced away from the road. If the head has been repaired or replaced, take an image of the side of the repaired head that faces away from the road.
13.	Obtain overview image(s) of the entire damaged area of the guardrail, taken from the road side of the guardrail. This image should cover from the terminal impact head to the first two undamaged posts – and may require several images.
14.	Obtain overview image(s) of the entire damaged area of the guardrail, taken from the non-road side of the guardrail. This image should cover from the terminal impact head to the first two undamaged posts – and may require several images.
15.	The location of this image is determined by finding the first two posts NOT damaged by the impact (indicated by the black squares in Figure 8). With the undamaged posts visible in the image, take a photograph along the guardrail looking back toward the point of impact.
16.	Lookback image showing the vehicle's pre-event path of travel.
17.	Lookback image showing the road edge, taken in the direction of the point of road departure. This image is captured 30 meters past the end of the guardrail damage.
18.	Overhead views of the damaged posts showing the numbers painted on the ground. Do not use the monopod; from a standing position, capture two posts in each image until all damaged posts are captured. If posts are missing, number and use the area where the post was located. If the posts have been repaired or replaced, photograph the new or repaired posts.

Guardrail Face Struck

Although a guardrail is a fixed object, it requires even further photographic coverage than other struck objects. These images illustrated in **Figure 9** and are required any time a guardrail face is struck – it does not have to be the first object struck. These images must include:

- Image(s) of the damage done to the guardrail face
- Overhead views of all damaged and missing posts

Image No.	Description
1-3.	Five seconds of precrash travel in intervals described in the General section.
4.	Image at the location where the vehicle departed the road edge, taken in the path toward the guardrail face struck by the vehicle.

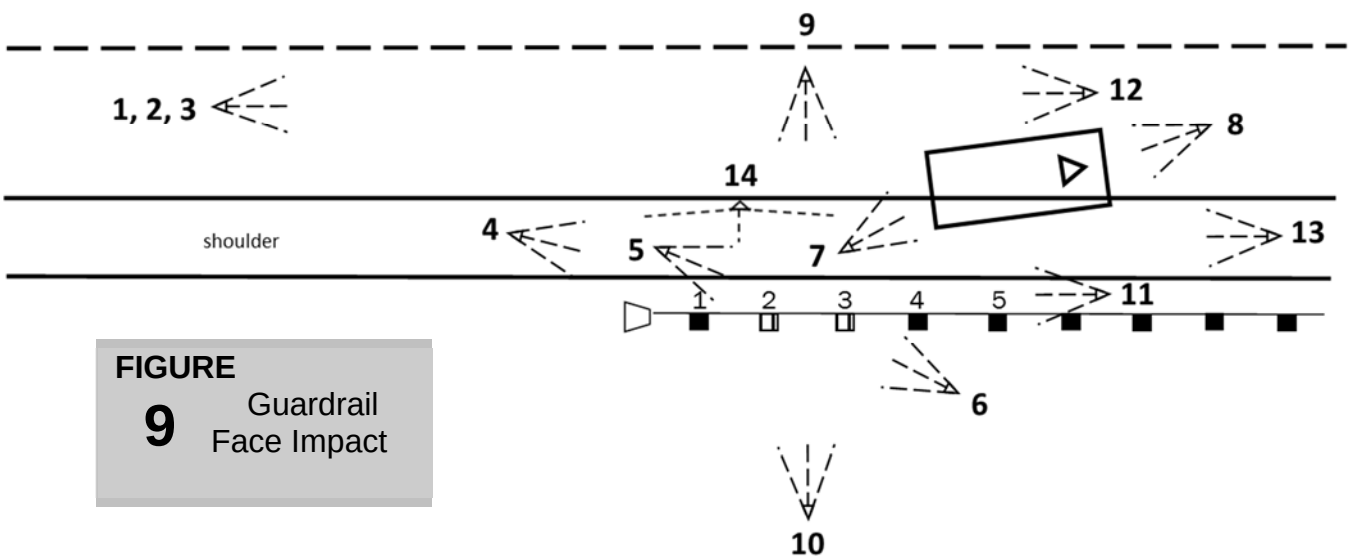

FIGURE 9 Guardrail Face Impact

5.	Image of the point of impact with the guardrail face.
6.	Taken from a position opposite of image 5, capture a look-back image of the vehicle's point of impact with the guardrail face.
7.	In the direction of the vehicle's post impact trajectory, photograph the final rest location of the vehicle.
8.	Taken from a position opposite of image 7, capture a look-back image of the vehicle's final rest.
9.	Obtain overview image(s) of the entire damaged area of the guardrail, taken from the road side of the guardrail. This image should cover from the first two undamaged posts to the last two undamaged posts – and may require several images.

Image No.	Description
10.	Obtain overview image(s) of the entire damaged area of the guardrail, taken from the non-road side of the guardrail. This image should cover from the terminal impact head to the first two undamaged posts – and may require several images.
11.	The location of this image is determined by finding the first two posts NOT damaged by the impact (indicated by the black squares in Figure 9). With the undamaged posts visible in the image, take a photograph along the guardrail looking back toward the point of impact.
12.	Lookback image showing the vehicle's pre-event path of travel.
13.	Lookback image showing the road edge, taken in the direction of the point of road departure. This image is captured 30 meters past the end of the guardrail damage.
14.	Overhead views of the damaged posts showing the numbers painted on the ground. Do not use the monopod; from a standing position, capture two posts in each image until all damaged posts are captured. If posts are missing, number and use the area where the post was located. If the posts have been repaired or replaced, photograph the new or repaired posts.

Evidence Not Present

When no physical evidence is present, a minimum of three approach images should be taken. Begin at five seconds from the first harmful event; take additional images at appropriate intervals. The images should enable the capture of the complete trafficway including: all roadways, travel lanes, lane lines, parking lanes, shoulders, curbs, along with any relevant sidewalks, traffic control devices, regulatory signs, and roadside items (including potential view obstructions). Also include the following:

- An image of the point of impact area for each vehicle.
- If post-impact travel exists, images at close intervals from impact to final rest.
- Overview images of the final rest position including one taken from an angle perpendicular to the vehicle's travel path to final rest.
- A look-back image from the final rest position including the vehicle's final rest position.
- A look-back image showing the vehicle's pre-impact travel - taken beyond the point of impact and should include the point of impact area.

Section Two

Vehicle Exterior Photography

Frontal Impact

Begin with a full frontal view; all subsequent views should be taken following a counterclockwise scheme as illustrated in **Figure 10**. All views should be taken at the damage level (beltline area) unless otherwise specified. The flash should be activated on all exterior images to help eliminate shadows, glare, etc. The reference rods and crush markers should be left in place for all images with the exception of the one damaged plane image required with no equipment in place. It is recommended to take one image of the damaged plane with no equipment in place, set all equipment and leave the equipment in place for all of the remaining images. A reference rod should be placed on the ground perpendicular to the center of the damaged end plane.

Image No.	Description

1. Two views of the entire frontal plane should be taken showing the direct and induced damage. One image should have no markers, scales, or equipment in place. The other image should include a vertical reference rod against the damaged area, a reference rod on the ground perpendicular to the center point of the damaged end plane, and visual markers affixed to the damaged area. Ensure that the direct damage width is identified by green markers and that the evidence of direct damage is clearly visible in the views. Use close-up images as needed. If this vehicle's bumper overrode the vehicle or object that produced the damage, then, in addition to the standing image, take another view from a kneeling position so as to capture any damage below the bumper.

OBTAIN AN OVERHEAD IMAGE OF ALL IMPACTS (SEE PAGE 28).

1a. Image taken parallel to the damage plane showing any crush marker positions visible from the driver's side across the frontal plane. This image should be taken from a **standing** position.

1b. Image taken parallel to the damage plane showing any crush marker positions visible from the passenger's side across the frontal plane. This image should be taken from a **standing** position.

- If measurements are required at two damage levels (i.e., bumper and above bumper) the bumper level images (1, 1a, and 1b) should be followed by a similar set of above bumper images.

Image No.	Description
1c.	View **(from a standing position)** down the passenger side of the vehicle aligned with the right side of the vehicle. Image shows the lateral movement (or lack thereof) of the end plane, which is helpful in determining PDOF.
1d.	View **(from a standing position)** down the driver side of the vehicle aligned with the left side of the vehicle. Image shows the lateral movement (or lack thereof) of the end plane, which is helpful in determining PDOF.
2.	Oblique (45 degree angle) photograph including entire front and driver side planes.
3.	Photograph entire driver side. When there is direct damage to the driver's side, close-ups of direct damage will follow. When direct damage is not present to the driver's side, and only induced damage is present (i.e., glazing damage, pillar movement or integrity loss), close-up images of these should follow image 3.
4.	Oblique (45 degree angle) photograph including entire driver side and rear planes.
4a.	View **(from a standing position)** down the driver side of the vehicle aligned with the undamaged portion of the left side of the vehicle. Image shows the lateral movement (or lack thereof) of the end plane, which is helpful in determining PDOF.
4b.	View **(from a standing position)** down the passenger side of the vehicle aligned with the undamaged portion of the right side of the vehicle. Image shows the lateral movement (or lack thereof) of the end plane, which is helpful in determining PDOF.

FIGURE 10 Frontal Impact

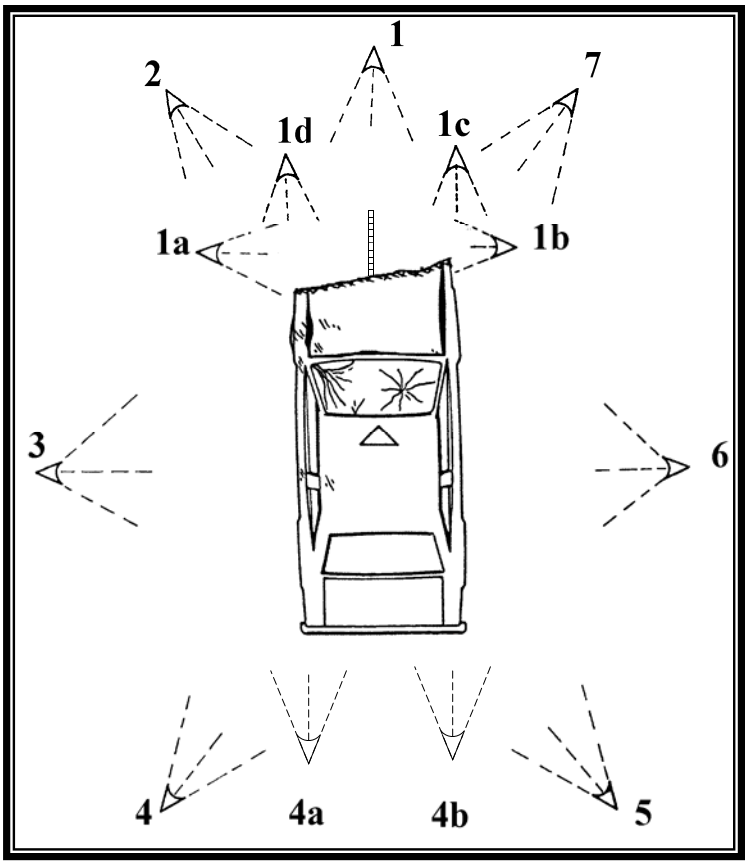

Image No.	Description

5. Oblique (45 degree angle) photograph including entire rear and passenger side planes.

6. Photograph entire passenger side. If direct damage is present, follow the procedure used on the driver's side (see image 3).

7. Oblique (45 degree angle) photograph including the entire front and passenger side planes.

Additional images required for damaged planes and components may include:

- **integrity loss** - include components such as doors, windows, etc.
  - include scale only if "adult head" size is questionable
- **pillar separation -** include close-up images
- **door latch/striker/hinge damage -** include close-up images of damaged component(s)
- **damaged sun roofs**
- **exterior intruding components -** include close-up images
- **images in support of field safety notifications**
- **damaged fuel tank -** include close-up images of damage or integrity loss

The preceding procedure should be used whenever field conditions allow. If vehicles are stored in close proximity to one another or are stored in a closed-in area, overlapping images of the specific plane may be required to fully document the vehicle.

ALL IMAGES ARE TO BE OBTAINED WITH THE LICENSE PLATE(S) COVERED.

FOR EACH VEHICLE PHOTOGRAPHED, ONE IMAGE OF ONE LICENSE PLATE AND ONE IMAGE OF THE VIN ARE TO BE DOCUMENTED.

IF THIS IS A CERTIFIED ALTERED VEHICLE, OBTAIN AN IMAGE OF THE CERTIFICATION LABEL.

Be sure to document possible ejection routes. Both partial and complete ejection may leave physical evidence on the exterior of the vehicle as well as the interior. Occupant contact near open or broken glazing may be an indication of ejection and should be carefully inspected.

HIGHLIGHT EJECTION EVIDENCE WITH CONTACT TAPE AND OBTAIN CLOSE UPS OF THE AREA.

Rear Impact

Begin with a 45 degree angle including entire front and driver side planes. All subsequent views should be taken following a counterclockwise scheme as illustrated in **Figure 11**. All views should be taken at the damage level (beltline area) unless otherwise specified. The flash should be activated on all exterior images to help eliminate shadows, glare, etc. The reference rods and crush markers should be left in place for all images with the exception of the one damaged plane image required with no equipment in place. It is recommended to take one image of the damaged plane with no equipment in place, set all equipment and leave the equipment in place for all of the remaining images. A reference rod should be placed on the ground perpendicular to the center of the damaged end plane.

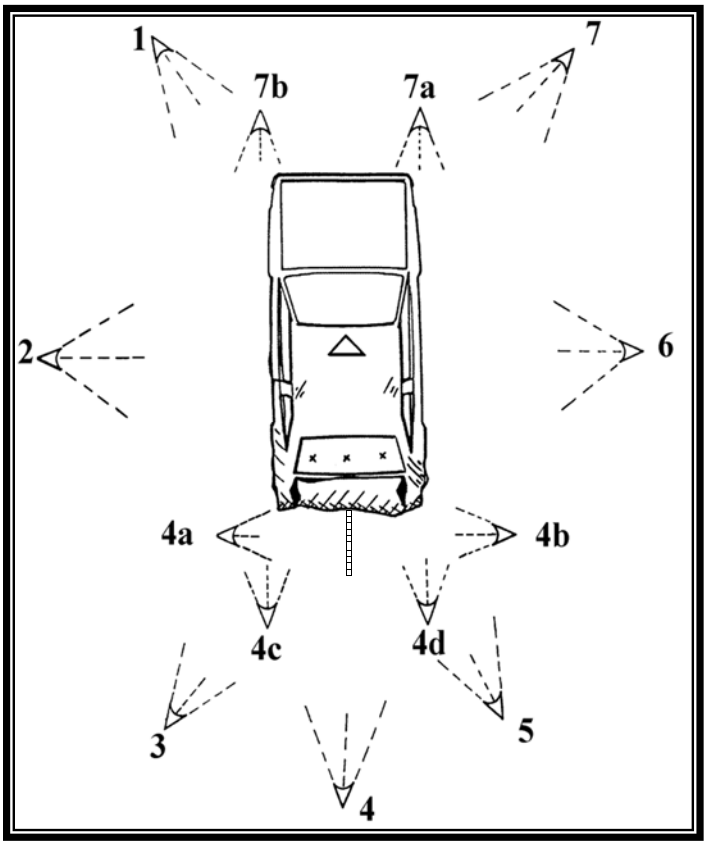

FIGURE **11** Rear Impact

Image No.	Description
1.	Oblique (45 degree angle) photograph including the entire front and driver side planes.
2.	Photograph entire driver side. When there is direct damage to the driver side, close-ups of the direct damage will follow. When direct damage is not present and only induced damage is noted (i.e., glazing damage, pillar movement or integrity loss), close-up images of these should follow image 2.
3.	Oblique (45 degree angle) photograph including the entire driver side and rear planes.
4.	Two images of the entire rear plane should be taken showing the direct and induced damage. . One image should have no markers, scales, or equipment in place. The other image should include a vertical reference rod against the damaged area, a reference rod on the ground perpendicular to the center point of the damaged end plane, and visual markers affixed to the damaged area. Ensure the direct damage width is identified with green markers. If this vehicle's bumper overrode the vehicle or object that produced the damage, then, in addition to the standing image, take another image from a kneeling position so as to capture any below bumper damage.
4a.	Image taken parallel to the damage plane showing any crush marker positions visible from the driver's side across the back plane. This image should be taken from a **standing** position.

Image No.	Description

4b. Image taken parallel to the damage plane showing any crush marker positions visible from the passenger's side across the back plane. This image should be taken from a **standing** position.

- If measurements are required at two damage levels (i.e., bumper and above bumper) the bumper level images (4, 4a, and 4b) should be followed by a similar set of above bumper images.

OBTAIN AN OVERHEAD IMAGE OF ALL IMPACTS (SEE PAGE 28).

4c. View **(from a standing position)** down the driver side of the vehicle aligned with the undamaged portion of the left side of the vehicle. This shows the lateral movement (or lack thereof) of the end plane which is helpful in determining PDOF.

4d. View **(from a standing position)** down the passenger side of the vehicle aligned with the undamaged portion of the right side of the vehicle. This shows the lateral movement (or lack thereof) of the end plane which is helpful in determining PDOF.

5. Oblique (45 degree angle) photograph including the rear and passenger side planes.

6. Photograph entire passenger side. Follow the instructions for image 2 with respect to direct damage, induced damage (i.e., glazing, pillars, and integrity) and additional close-up images.

7. Oblique (45 degree angle) photograph including the front and passenger side planes.

7a. View **(from a standing position)** down the passenger side of the vehicle aligned with the undamaged portion of the right side of the vehicle. This shows the lateral movement (or lack thereof) of the end plane which is helpful in determining PDOF.

7b. View **(from a standing position)** down the driver side of the vehicle aligned with the undamaged portion of the left side of the vehicle. This shows the lateral movement (or lack thereof) of the end plane which is helpful in determining PDOF.

Additional images required for damaged planes and components may include:

- **integrity loss** - include components such as doors, windows, etc.
  - include scale only if "adult head" size is questionable
- **pillar separation -** include close-up images
- **door latch/striker/hinge damage -** include close-up images of damaged component(s)
- **damaged sun roofs**
- **exterior intruding components -** include close-up images
- **images in support of field safety notifications**
- **damaged fuel tank -** include close-up images of damage or integrity loss

The preceding procedure should be used whenever field conditions allow. If vehicles are stored in close proximity to one another or are stored in a closed-in area, overlapping images of the specific plane may be required to fully document the vehicle.

ALL IMAGES ARE TO BE OBTAINED WITH THE LICENSE PLATE(S) COVERED.

FOR EACH VEHICLE PHOTOGRAPHED, ONE IMAGE OF ONE LICENSE PLATE AND ONE IMAGE OF THE VIN ARE TO BE DOCUMENTED.

IF THIS IS A CERTIFIED ALTERED VEHICLE, OBTAIN AN IMAGE OF THE CERTIFICATION LABEL.

Be sure to document possible ejection routes. Both partial and complete ejection may leave physical evidence on the exterior of the vehicle as well as the interior. Occupant contact near open or broken glazing may be an indication of ejection and should be carefully inspected.

HIGHLIGHT EJECTION EVIDENCE WITH CONTACT TAPE AND OBTAIN CLOSE UPS OF THE AREA.

Side Impact

Begin with full front view of the vehicle. All subsequent views should be taken following a counterclockwise scheme as illustrated in **Figure 12**. All views should be taken at the damage level (beltline area) unless otherwise specified. The flash should be activated on all exterior images to help eliminate shadows, glare, etc. The reference rods and crush markers should be left in place for all images with the exception of the one damaged plane image required with no equipment in place. It is recommended to take one image of the damaged plane with no equipment in place, set all equipment and leave the equipment in place for all of the remaining images. A reference rod should be placed on the ground perpendicular to the center of the damaged wheel base.

Image No.	Description
1.	Photograph entire front plane. When direct damage is present on the frontal plane (see Figure 10, views 1a and 1b), views 1a and 1b will follow image # 1. Close-up images of the direct damage will follow.
2.	Oblique (45 degree angle) photograph including the front and driver side planes.
3.	Photograph entire driver side. In Figure 8, the damage is illustrated on the passenger side. For a driver side impact, views 8, 8a, and 8b should be obtained on the driver side of the vehicle and inserted following view number 3.
4.	Oblique (45 degree angle) photograph including entire driver side and rear planes.
5.	Photograph the entire rear plane. When direct damage is present on the rear plane (see Figure 10 - views 4a and 4b), views 5a and 5b would follow view 5. Close-up images of the direct damage would also be included.
6.	Oblique (45 degree angle) photograph including entire rear and passenger side planes.
7.	Photograph the entire passenger side.
8.	Two images of the entire side plane should be taken showing the direct and induced damage. . One image should have no markers, scales, or equipment in place. The other image should include a vertical reference rod against the damaged area, a reference rod on the ground perpendicular to the center point of the damaged wheel base, and visual markers affixed to the damaged area. Ensure the direct damage width is identified with green markers. If the direct damage width is significantly different than the Field L, a separate image identifying the direct damage is required.

OBTAIN AN OVERHEAD IMAGE OF ALL IMPACTS (SEE PAGE 28).

Image No.	Description

8a. Image taken parallel to the damage plane showing any crush marker positions visible from the back of the vehicle looking forward. This image should be taken from a **standing** position. The point defined side extent zones must be visible in this image.

8b. Image taken parallel to the damage plane showing any crush marker positions visible from the front of the vehicle looking rearward. This image should be taken from a **standing** position. The point defined side extent zones must be visible in this image.

- If measurements are required at two damage levels (i.e., mid-door and sill), the mid-door level views 8, 8a, 8b and close-ups should be followed by similar sill level views.

9. Oblique (45 degree angle) photograph including the front and passenger side planes.

FIGURE 12 Side Impact

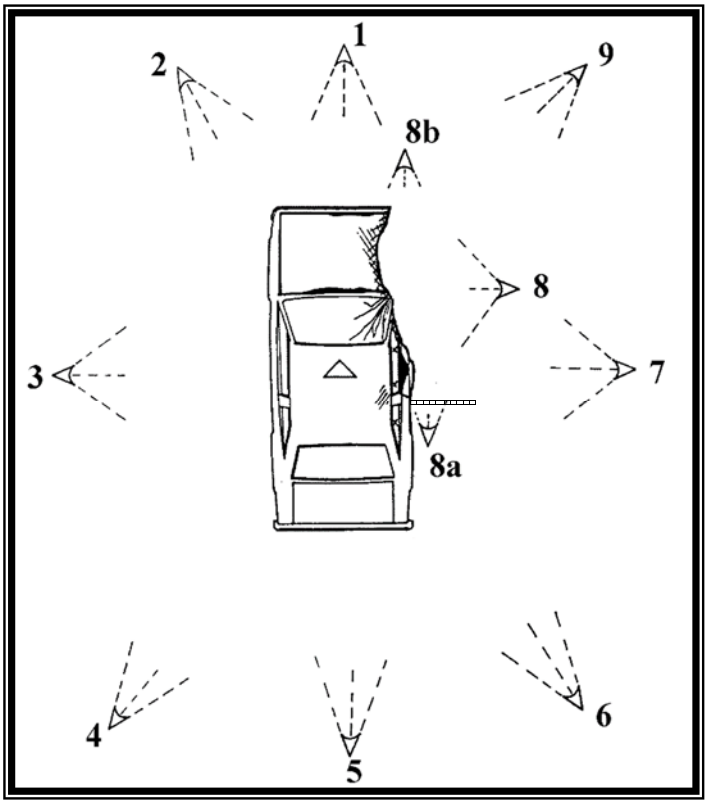

Additional images required for damaged planes and components may include:

- **integrity loss** - include components such as doors, windows, etc.
  - include scale only if "adult head" size is questionable
- **pillar separation -** include close-up images
- **door latch/striker/hinge damage -** include close-up images of damaged component(s)
- **damaged sun roofs**
- **exterior intruding components -** include close-up images
- **images in support of field safety notifications**
- **damaged fuel tank -** include close-up images of damage or integrity loss

ALL IMAGES ARE TO BE OBTAINED WITH THE LICENSE PLATE(S) COVERED.

FOR EACH VEHICLE PHOTOGRAPHED, ONE IMAGE OF ONE LICENSE PLATE AND ONE IMAGE OF THE VIN ARE TO BE DOCUMENTED.

IF THIS IS A CERTIFIED ALTERED VEHICLE, OBTAIN AN IMAGE OF THE CERTIFICATION LABEL.

The preceding procedure should be used whenever field conditions allow. If vehicles are stored in close proximity to one another or are stored in a closed-in area, overlapping images of the specific plane may be required to fully document the vehicle.

HIGHLIGHT EJECTION EVIDENCE WITH CONTACT TAPE AND OBTAIN CLOSE UPS OF THE AREA.

Be sure to document possible ejection routes. Both partial and complete ejection may leave physical evidence on the exterior of the vehicle as well as the interior. Occupant contact near open or broken glazing may be an indication of ejection and should be carefully inspected.

Rollover

The documentation of rollovers does not require the conventional use of Field L and crush measurements. Images of the top plane, in addition to the end and side planes, are particularly relevant.

The first view should be a full front view of the vehicle. All subsequent views should be taken following a counterclockwise scheme as illustrated in **Figure 13**. All views should be taken at the damage level (beltline area) unless otherwise specified. The flash should be activated on all exterior images to help eliminate shadows, glare, etc.

INCLUDE DEVICE USED TO TAKE THE MAX CRUSH MEASUREMENTS IN IMAGES.

Image No.	Description
1.	Photograph the entire front plane. Ensure that all direct damage is included. Taken at beltline level, the images may be an important indicator of maximum crush.
2.	Oblique (45 degree angle) photograph including entire front and driver side planes.
3.	Photograph the entire driver side. All direct damage along the side plane should be included.
4.	Close-up image of the left front tire and wheel.
5.	Close-up image of the left rear tire and wheel.
6.	Oblique (45 degree angle) photograph including entire driver side and rear planes.
7.	Photograph entire rear plane. Include all direct damage.

FIGURE 13 Rollover

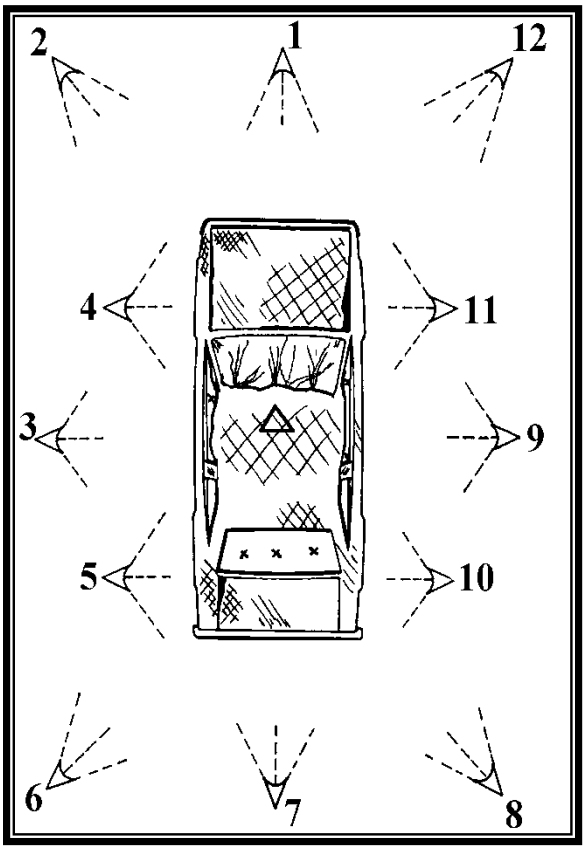

Image No.	Description
8.	Oblique (45 degree angle) photograph including entire rear and passenger side planes.
9.	Photograph entire passenger side. All direct damage along the side plane should be included.
10.	Close-up image of the right rear tire and wheel.
11.	Close-up image of the right front tire and wheel.
12.	Oblique (45 degree angle) photograph including the front and passenger side planes.

Images 13 - 16 are to be taken from a standing position as illustrated in Figures 14 and 15. Greater elevation is achieved by making use of a monopod or similar equipment. When using a monopod, be cautious of overhead objects such as electrical wires or fixtures.

Image No.	Description
13.	Frontal overhead view showing hood. Include the top plane of the vehicle, primarily with respect to direct damage. Multiple views are required if the damage cannot be included in a single view.
14.	Driver side overhead (to whatever extent possible) image showing top surface of roof. Include the left two-thirds (as a minimum) of the top plane, extending from the base of the windshield to the base of the backlight. Multiple views may be required for station wagon or van type vehicles. Ensure that all direct damage is included in the view(s).
15.	Rear overhead view showing top surface of trunk or hatch lid. Include the top plane of the vehicle, primarily with respect to direct damage. Multiple views are required if the damage cannot be included in a single view.

FIGURE 14 Rollover

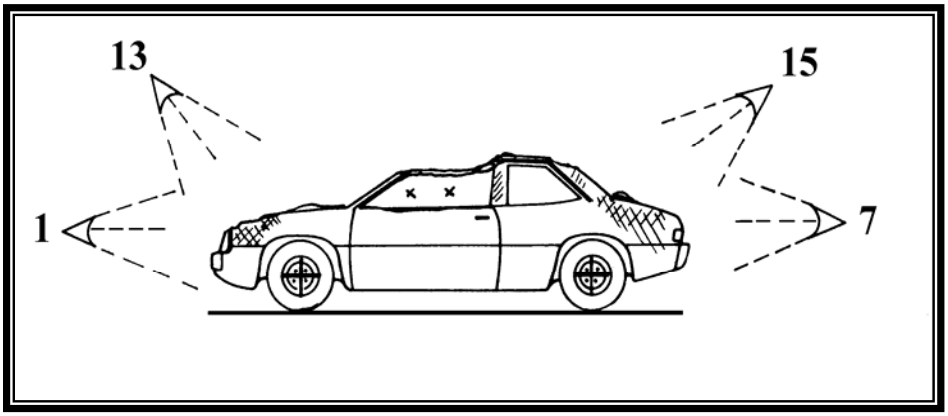

Image No.	Description

16. Passenger side overhead view showing top surface of roof. Include the right two-thirds (as a minimum) of the top plane, extending from the base of the windshield to the base of the backlight. Multiple views may be required for station wagon or van type vehicles. Ensure that all direct damage is included in the view(s).

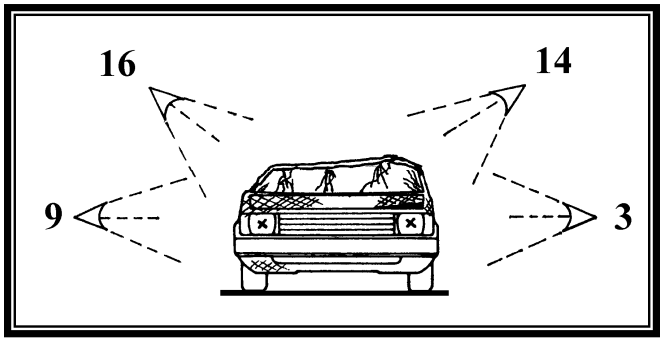

FIGURE 15 Rollover

Images 17-19 are to be taken with a reference device attached to the vehicle. These images should be taken for BOTH the vertical and the lateral measurements as illustrated in Figure 16. Take close-up images as necessary.

17. View from the front of the vehicle showing the reference scale used to obtain the vertical and lateral maximum crush.

18. View from the back of the vehicle showing the reference scale used to obtain the vertical and lateral maximum crush.

19. View from the side of the vehicle showing the reference scale used to obtain the vertical and lateral maximum crush.

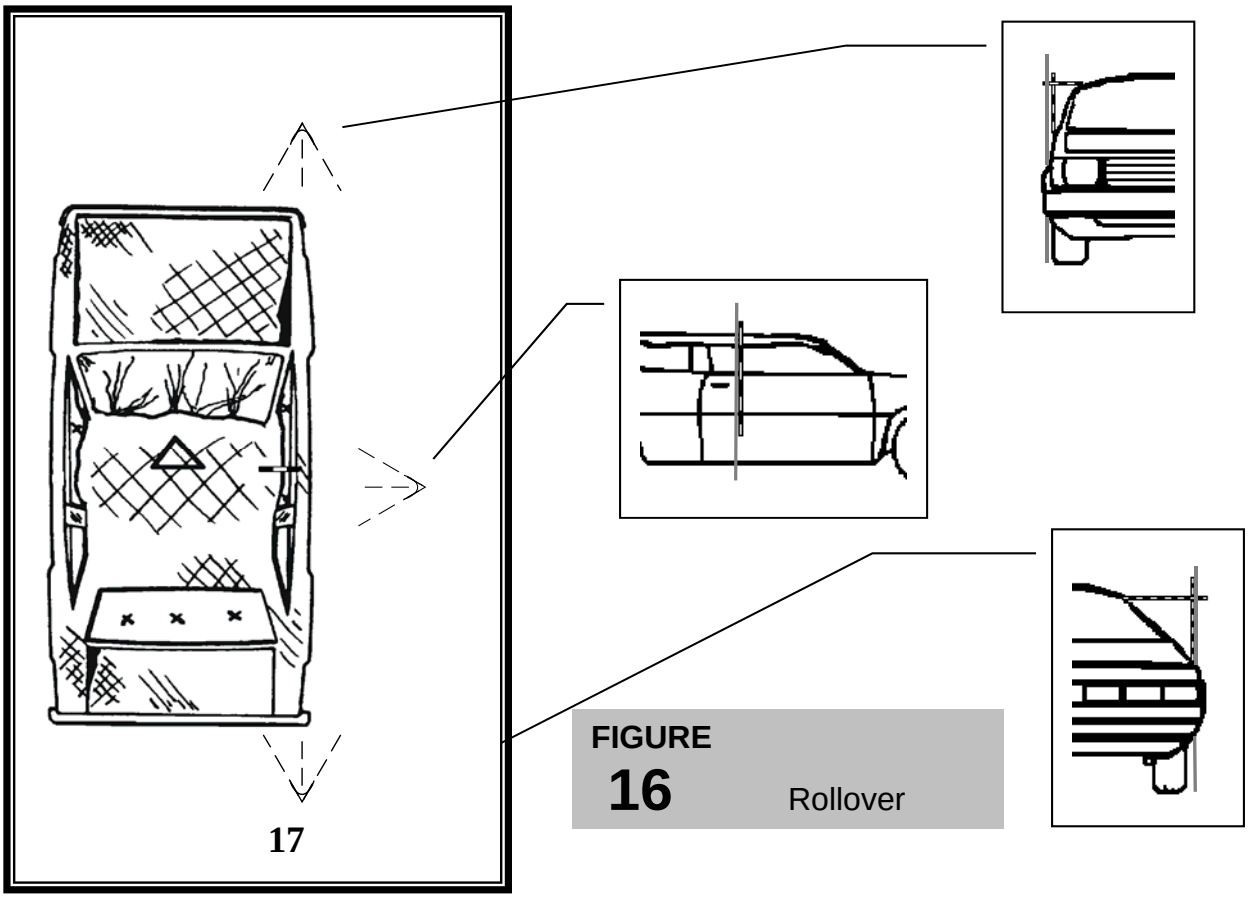

FIGURE 16 Rollover

Additional images required for damaged planes and components may include:

- **integrity loss** - include components such as doors, windows, etc.
  - include scale only if "adult head" size is questionable
- **pillar separation -** include close-up images
- **door latch/striker/hinge damage -** include close-up images of damaged component(s)
- **damaged sun roofs**
- **exterior intruding components -** include close-up images
- **images in support of field safety notifications**
- **damaged fuel tank -** include close-up images of damage or integrity loss

ALL IMAGES ARE TO BE OBTAINED WITH THE LICENSE PLATE(S) COVERED.

FOR EACH VEHICLE PHOTOGRAPHED, ONE IMAGE OF ONE LICENSE PLATE AND ONE IMAGE OF THE VIN ARE TO BE DOCUMENTED.

IF THIS IS A CERTIFIED ALTERED VEHICLE, OBTAIN AN IMAGE OF THE CERTIFICATION LABEL.

The preceding procedure should be used whenever field conditions allow. If vehicles are stored in close proximity to one another or are stored in a closed-in area, overlapping images of the specific plane may be required to fully document the vehicle.

HIGHLIGHT EJECTION EVIDENCE WITH CONTACT TAPE AND OBTAIN CLOSE UPS OF THE AREA.

Be sure to document possible ejection routes. Both partial and complete ejection may leave physical evidence on the exterior of the vehicle as well as the interior. Occupant contact near open or broken glazing may be an indication of ejection and should be carefully inspected.

Fully Repaired

Images should be taken counterclockwise around the vehicle at the beltline level as illustrated in **Figure 17**. The flash should be activated on all exterior images to help eliminate shadows, glare, etc. Interior images are required, even if the vehicle is fully repaired.

Image No.	Description
1.	Oblique (45 degree angle) photograph including the entire front and driver side planes.
2.	Oblique (45 degree angle) photograph including the entire driver side and rear planes.
3.	Oblique (45 degree angle) photograph including the entire rear and passenger side planes.
4.	Oblique (45 degree angle) photograph including the entire passenger side and front planes.

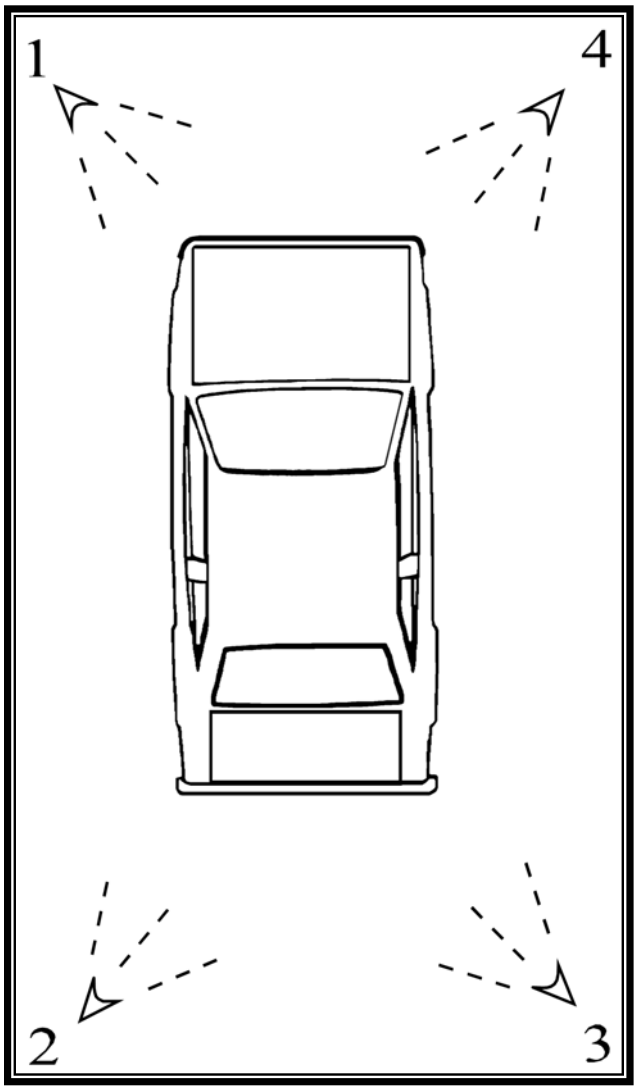

FIGURE
17
Repaired

ALL IMAGES ARE TO BE OBTAINED WITH THE LICENSE PLATE(S) COVERED.

FOR EACH VEHICLE PHOTOGRAPHED, ONE IMAGE OF ONE LICENSE PLATE AND ONE IMAGE OF THE VIN ARE TO BE DOCUMENTED.

IF THIS IS A CERTIFIED ALTERED VEHICLE, OBTAIN AN IMAGE OF THE CERTIFICATION LABEL.

Overhead

This guideline is to be followed for all applicable vehicles. This image is designed to provide a vertical, overhead view of the damage. The picture should be taken using a monopod or similar device to ensure the view of the damaged area is straight down. If the vehicle sustained more than one impact, an overhead view should be taken for each of the impacted areas.

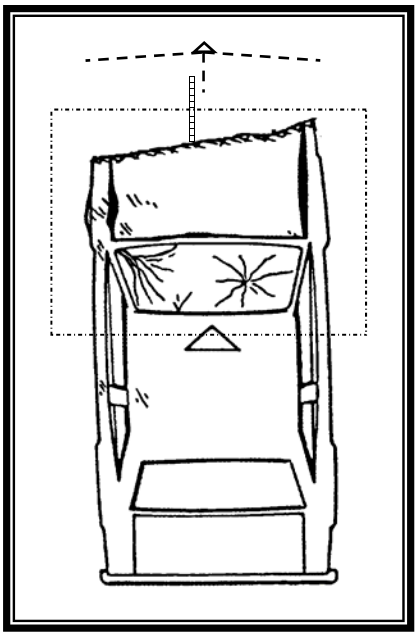

FIGURE 18

Front Impact Overhead

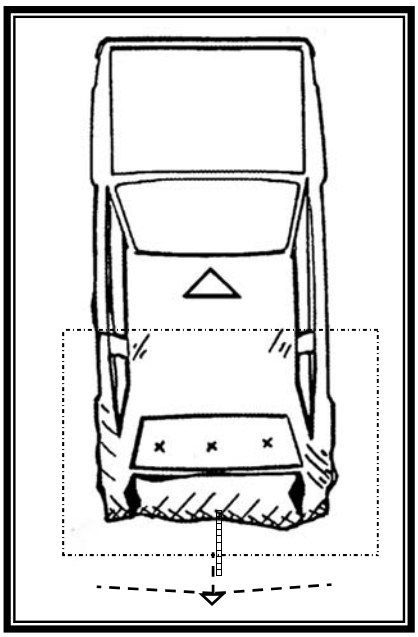

FIGURE 19

Rear Impact Overhead

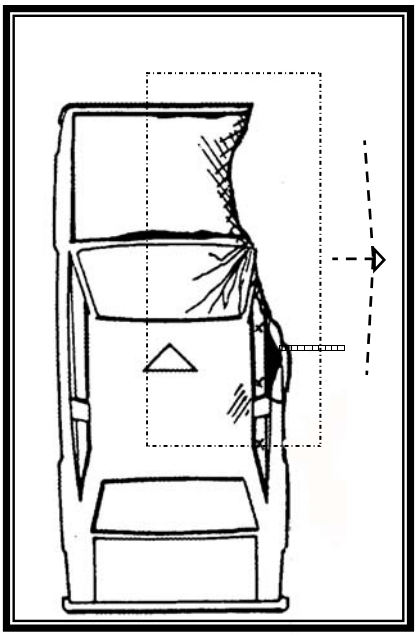

FIGURE 20

Side Impact Overhead

- For frontal overhead images, ensure that the entire damaged area is visible. The image should include the hood and as much of the windshield as possible as illustrated in **Figure 18**. Do NOT rotate the camera to fit more of the vehicle in the image.

- For rear overhead images, ensure that the entire damaged area is visible. The image should include the trunk and as much of the backlight as possible as illustrated in **Figure 19**. Do NOT rotate the camera to fit more of the vehicle in the image.

- For side overhead images, ensure that the entire damaged area is visible. Depending on the impact location, the image should include the fender or door(s) and as much of the hood, roof or trunk as possible as illustrated in **Figure 20**. Do NOT rotate the camera to fit more of the vehicle in the image.

Tires

This guideline is to be followed for all applicable vehicles to provide verification of the condition, size and air pressure recommendations of all tires on the vehicle. This image should be taken from a position level with the tire to ensure clarity.

Image No.	Description

1. **Image of the whole tire.**
   This image should include as much of the tire data as possible including the TIN, manufacturer, model and size. **Figure 21** illustrates the data commonly found on the sidewall of tires. If the data is not visible in a single image, **individual close-ups** should be obtained. Chalk should be used to highlight tire data when it is appropriate.

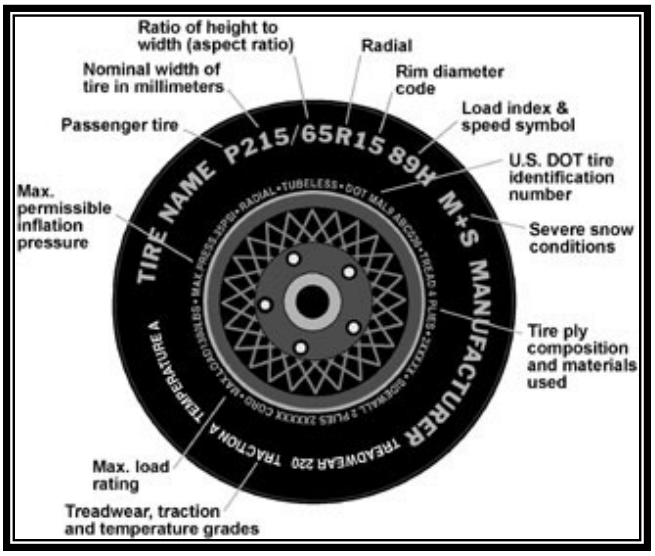

FIGURE 21

Tire Sidewall Information

2. **Any tire damage.** Close-up views of all damage including:

   - puncture
   - dry rot (cracks)
   - belt exposure
   - tread separation
   - rim deformation

REFERENCE SCALE OR INCREMENTED TAPE MUST BE INCLUDED IN IMAGES WHEN THERE IS PUNCTURED OR HOLED TYPE DAMAGE TO THE TIRE.

3. **Image of the manufacturer's tire placard.** The tire placard displays the manufacturer's recommended tire size and inflation pounds per square inch. Be aware that many manufacturers also include the VIN on this placard (see appendix A).

Fuel System

This guideline is to be followed ONLY for applicable flex fuel vehicles to capture the fuel types.

Image No.	Description
1.	**Image of fuel cap and door.** Image should include the fuel cap and the inside of the fuel door, ensuring all labeling is captured as illustrated in **Figure 22**.

FIGURE 22

Fuel Cap and door

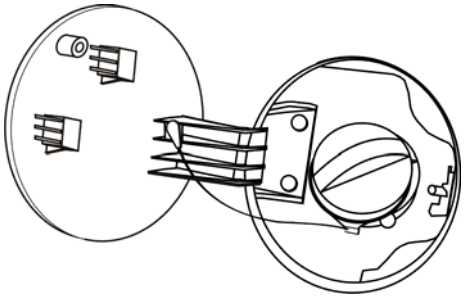

The following are to be followed for all applicable vehicles ONLY if there is damage or integrity loss to the fuel tank.

Image No.	Description
1.	**Images of fuel system damage.** Damage includes, but is not limited to, dents, tears, holes, punctures or surface scraping. Close-up views are required of all damage. Reference scales are required in all views.
2.	**Any loss of integrity to the fuel system must be documented.** A reference scale must be included. Integrity loss includes any damage that allows for the leakage of fuels. Tears and/or punctures in the fuel tank skin, separation at the seams, and separation of the filler neck or sending unit are examples of fuel system integrity loss. Include close-up views of all integrity loss.
2.	**If a fire occurs subsequent to an impact, thoroughly document the suspected origin area(s) of the fire.** These views should include both overviews and specific close-up views of the damaged areas with a reference scale. Views should be taken of the entire engine compartment with the hood raised when the engine is suspected as the ignition source. Close-ups are to be included of any damage to the engine that may have contributed to the initiation or severity of the fire. Consider the potential for fuel or oil leakage when identifying these areas. All fires require both a **fuel** and an **ignition** source. Once identified, both of these sources are to be documented using general overview and specific close-up views. A reference scale is to be included.

A REFERENCE SCALE MUST BE INCLUDED IN IMAGES OF FUEL TANK DAMAGE AND INTEGRITY LOSS.

Section Three

Vehicle Interior Photography

Occupant Compartment

It is recommended that the interior images be obtained using the same sequencing as illustrated in **Figures 23** and **24** to ensure complete and systematic documentation. Wide and telephoto settings should be used when appropriate to obtain the necessary subject of each view. Images should not be taken through glazing unless there is no alternative. The following procedures are to be followed:

- The interior images should represent the components of the vehicle as found upon your initial inspection. For example: seat positions, wheel position, seatbelt positions, and glazing should all be photographed at their location upon initial inspection. When components must be moved to complete the interior inspection, return the components to their post crash position prior to securing the images. When close-up images are required, it will be necessary to move components such as air bags and cover flaps to obtain the image.
- All child safety seats present in the vehicle, at the time of the inspection, must be fully documented and thoroughly photographed (See page 39). If a child safety seat was used, but not present at the time of inspection, all reasonable follow-up attempts should be made to document the child safety seat.
- Frame all suspected occupant contact areas with bright contrasting incremented tape.

POSITION CONTACT TAPE ADJACENT TO CONTACT POINTS, NOT ON THEM.

- Mid-range and close-up images of occupant contacts should follow an overall photograph. If there are numerous occupant contacts, they may be grouped provided all contacts are included in adequate detail. These images are used to verify injury sources.
- Applicable mid-range and close-up views should follow an overall view. **Required close-up views include but are not limited to:**
    - suspected occupant contact
    - integrity loss in components such as doors, windows, etc.
        - include scale only if "adult head" size is questionable
    - glazing damage
    - intruding components
    - steering wheel rim deformation
    - possible areas of occupant ejection

- Images of door panel contacts should be taken from an overall view that identifies the quadrant in which the contact occurred. Scales or tape should NOT be used to distinguish the quadrants.

- The flash should typically be activated on interior views to ensure proper illumination and to eliminate shadowing. It may be necessary to cover the vehicle glazing with a blanket to reduce outside glare and allow the flash to illuminate interior surfaces.

- If debris (bumper cover, door, etc.) is present in the passenger compartment, take a few images as the vehicle is found. Remove the debris for the remaining images.

Image No.	Description

1. View through open driver door or glazing when door cannot be opened. This image should identify the type of head restraint, seat type, and belt restraint system.

    - Right door and glazing
    - Head Restraint
    - Restraint systems

    - Right B pillar
    - Roof side rail
    - Front seat

USE ADDITIONAL CLOSE-UP IMAGES TO FULLY DOCUMENT ACTIVE HEAD RESTRAINTS AND NON-DEPLOYED AIR BAG LOCATIONS.

2. View through open driver door or glazing when door cannot be opened.

    - Windshield glazing
    - Windshield header
    - Complete instrument panel
    - Sun visors
    - Right A pillar

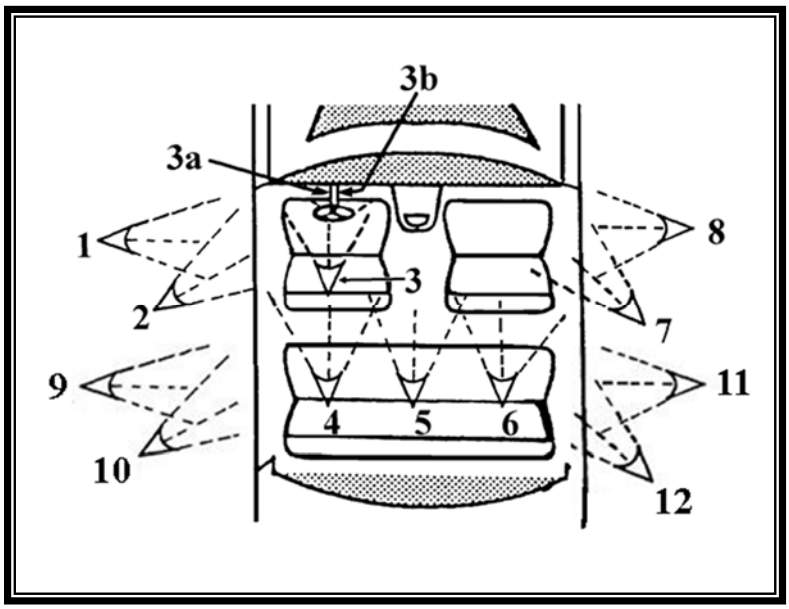

FIGURE 23

Occupant Compartment

3. Close-up of steering assembly from the driver's perspective.

3a. Lateral view from the left side of the steering assembly showing wheel/rim deformation, column compression, and special features.

3b. Lateral view from the right side of the steering assembly showing wheel/rim deformation, column compression and special features.

WHEN AN AIR BAG SYSTEM IS DEPLOYED, TUCK THE AIR BAG BACK INTO THE MODULE WHILE TAKING THE INTERIOR IMAGES. REFER TO THE AIR BAG SYSTEM SECTION FOR AIR BAG DOCUMENTATION PROCEDURES.

4. Vertical view of left one-third of the instrument panel from the windshield header to the base of the toe pan. If capturing the entire subject properly in one image is not possible, take two images – an upper half and a lower half.

- Sun visor
- Windshield header
- Windshield glazing
- Left A pillar and side mirror
- Steering wheel
- Toe pan / floor area

ROTATING THE CAMERA IS RECOMMENDED IMAGES 4-6.

5. Vertical view of center one-third of the instrument panel from the windshield header to the base of the toe pan. If capturing the entire subject properly in one image is not possible, take two images – an upper half and a lower half.

- Sun visor
- Windshield header
- Windshield glazing
- Rear view mirror
- Console when present
- Toe pan / floor area

6. Vertical view of right one-third of the instrument panel from the windshield header to the base of the toe pan. If capturing the entire subject properly in one image is not possible, take two images – an upper half and a lower half.

- Sun visor
- Windshield header
- Windshield glazing
- Right A pillar and side mirror
- Toe pan / floor area

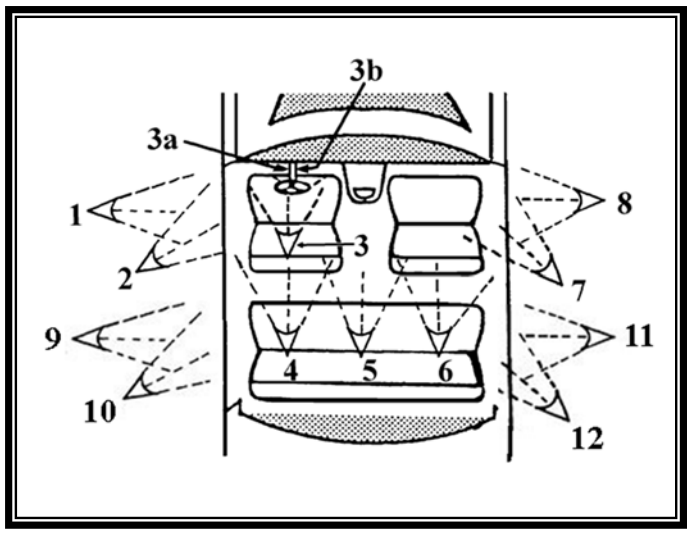

FIGURE 23 Occupant Compartment

Image No.	Description

7. View through open front passenger door or glazing when door cannot be opened.

    - Windshield glazing
    - Windshield header
    - Complete instrument panel
    - Sun visors
    - Left A pillar

8. View through the open front passenger door or glazing when the door cannot be opened. This image should identify the type of head restraint, seat type, and belt restraint system.

    - Left door and glazing
    - Head Restraint
    - Restraint systems
    - Left B pillar
    - Roof side rail
    - Front seat

Images 9 through 12 are to be repeated for any additional seating areas such as third or fourth rows in vans or utility vehicles.

9. View through open left rear door or glazing when the door cannot be opened / is not present.

    - Right side glazing
    - Right door if applicable
    - Roof side rail
    - Rear seat
    - Right B pillar
    - Right C pillar

USE ADDITIONAL CLOSE-UP IMAGES TO FULLY DOCUMENT ACTIVE HEAD RESTRAINTS AND NON-DEPLOYED SIDE AIR BAG LOCATIONS.

10. View of the back side of the left front seat

    - Include seat back and head restraint (include center seat back if applicable)

11. View through open right rear door or glazing when the door cannot be opened / is not present.

    - Left side glazing
    - Left door if applicable
    - Roof side rail
    - Rear seat
    - Left B pillar
    - Left C pillar

12. View of the back side of the right front seat

    - Include seat back and head restraint (include center seat back if applicable)

Images 14 and 16 are to be repeated for any additional seating areas such as third or fourth rows in vans or utility vehicles. The images should overlap to include center seating positions and should capture:

- Seat cushion
- Head restraint
- Upper anchor adjuster
- Seat back
- Restraint systems
- LATCH / anchors when present

Image No.	Description
13.	View from the forward-most position possible, photograph the left front seating position.
14.	View from between the head restraints or the seat backs (bucket seats), photograph the left rear seating position.
15.	View from the forward-most position possible, photograph the right front seating position.
16.	View from between the head restraints or the seat backs (bucket seats) photograph the right rear seating position.

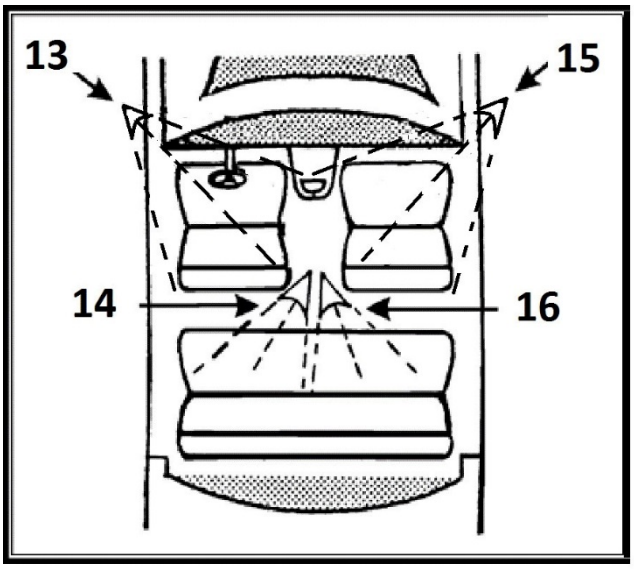

FIGURE 24 Occupant Compartment

EXAMINE THE BACK OF SEAT BACK SUPPORTS AND CONSOLES FOR CONTACTS OR LOADING FROM REAR SEAT OCCUPANTS

Any evidence of contact or damage to the restraint systems should be highlighted and photographed. Include close-up images of damage or failure to the webbing, latch plate, buckle, upper anchorage adjustments, or mounting points. Also photograph evidence indicative of restraint usage such as web stretching, D-ring load marks, and actuated pretensioners.

IF A VEHICLE SEAT HAS BEEN REMOVED <u>PRIOR TO THE CRASH</u>, NO IMAGES OF THE RESTRAINT SYSTEM ARE NEEDED.

Crash Avoidance Technologies

This section of the guideline is to be followed for all applicable vehicles equipped with crash avoidance systems. These images must verify the presence and location of the avoidance system components including cameras, sensors, warning lights, and on/off switches.

- Vehicles with crash avoidance systems will be equipped with cameras and/or sensors. Wide angle and close up views showing the location of the camera and sensors are required. When the camera is located near the rear view mirror, images from exterior and interior of the vehicle should be taken.

- When the vehicle is equipped with avoidance equipment with an on/off switch, obtain images of the switch location and position. The switch may be located on the instrument panel, center tunnel, or steering wheel. Some systems may be turned on/off by toggling the instrument display.

- Avoidance systems typically have an indicator light which illuminates in conjunction with the audible or haptic warning. When the vehicle has power, images of the indicator lights should be taken. Systems may have indicator lights on the instrument display, bottom of the windshield, or center console. Systems such as Blind Spot Detection typically have indicator lights on the side view mirror, a-pillar, or instrument display.

EDR

This section of the guideline is to be followed for all applicable vehicles equipped with a supported Electronic Data Recorder, but EDR information was not obtained due to vehicle damage. When "not obtained/vehicle damage" is reported on the Exterior Vehicle form, photos are required.

- Obtain images that clearly show the specific vehicle damage that prevented the EDR imaging. The images should demonstrate that DLC, fuse block, and direct to module attempts were not possible due to vehicle damage.

Air Bag System

This section of the guideline is to be followed for all applicable vehicles equipped with an air bag system. These images must provide verification of the location and deployment status, as well as document any evidence of damage to the air bag system(s). Repeat these steps for each deployed airbag in the vehicle.

WHEN AIR BAG DAMAGE IS DOCUMENTED, A REFERENCE SCALE MUST BE INCLUDED IN IMAGES.

- When the vehicle is equipped with an air bag cutoff switch, obtain images of the switch position. **NOTE:** some systems have an indicator light visible in the passenger compartment and the associated keyed-switch in the glove box. Images of both the indicator light and the switches are required.
- Overall images of the air bag module cover flaps showing tear points prior to positioning the air bag for the subsequent images.
- Obtain close-up images of any damage, contact, or transfers to the cover flaps.
- Unfold the air bag so that it is completely extended from the module.
- Lay the air bag flat against the steering wheel, instrument panel, or door panel.
- For steering column air bags, a label with the word "**TOP**" and an arrow symbol should be placed on the air bag. Direct the arrow toward the postcrash top of the steering wheel and air bag.
- Obtain images of the face of the air bag showing contacts and positioning of **"TOP"** indicator for steering wheel air bags.

HIGHLIGHT ALL SUSPECTED OCCUPANT CONTACTS WITH INCREMENTED TAPE.

- Close-up images of any damage, contact, or transfers to the face of the air bag.
- Close-up images of any damage, contact, or transfers to the back of the air bag.
- Side air bags have a variety of deployment locations and shapes. Photograph air bag contact and damage as outlined above. Unique shapes, tethers, and attachment points may require additional images for adequate documentation.
- Obtain close-up images to document the location of non-deployed side air bag locations.

Child Safety Seat

This section of the guideline is to be followed for all child safety seats present in an applicable vehicle at the time of the crash, including seats that were removed from the vehicle subsequent to the crash. Unless prevented by an authority (on-going investigation, etc.), the child seat must be removed to obtain the following required images illustrated in **Figure 25**.

DO NOT REINSTALL THE CHILD SEAT AFTER INSPECTION.

Take several images of the seat as it is found upon arrival. If the seat is still installed, obtain images of all installation data (belt path, locking clip location, latch plate type from both sides) **prior** to removing the child safety seat. Additionally, obtain images of the vehicle belt system or LATCH system that was used to secure the child safety seat. When returning the child restraint to the vehicle, place it on its side or upside down to prevent improper subsequent use.

FIGURE 25

Child Restraints

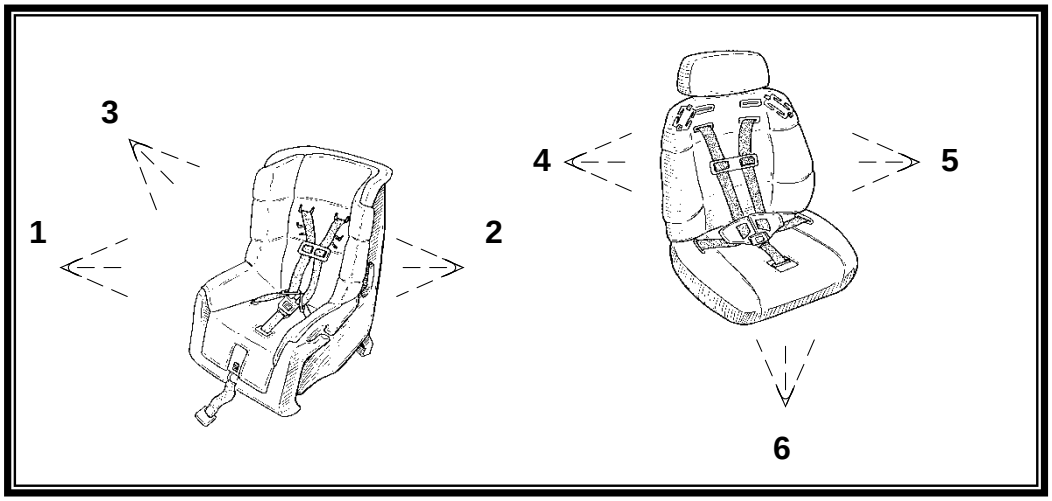

Image No.	Description
1.	View of the front of the seat • Harness slots • Harness system • Buckle - buckled and unbuckled • Evidence of stress or loading
2.	View of the back of the seat • Harness slots • Harness system • Belt path • Tether and LATCH components • Evidence of stress or loading • Any device used to achieve proper seating angle (pool noodle, towel)

HIGHLIGHT ALL SUSPECTED OCCUPANT CONTACTS WITH INCREMENTED TAPE.

Image No.	Description

3. View of the seating area

    - Harness and/or shield in buckled position
    - Harness and/or shield in unbuckled position
    - Evidence of stress or loading
    - Damage to the seat – **look under padding**

FIGURE 26

Manufacturer Labels

4. Image of the right side of the seat

5. Image of the left side of the seat

6. Images of the bottom of the seat and the base, when present

7. Close-up images of all manufacturers' labels, especially the label that identifies the model number and date of manufacture as illustrated in **Figure 26**. Also include labels that provide height and weight recommendations and installation guidelines. Be careful not to wash out label photographs with the flash, especially labels printed on a glossy surface.

8. **Obtain close-up images of any seat damage or abnormal usage such as:**

    - Twisted harness webbing
    - Knots in harness webbing
    - Retainer clip reversed or used improperly
    - After-market items such as toys, pads, or clips
    - Cracks in frame, belt path, or shell
    - Harness, shield, or tether deformation/stress

Appendix A

Sanitization

Guidelines for Image Sanitization

It is the responsibility of each Technician/Investigator to sanitize the case images. The image categorization program was designed so sanitization can be done at the same time as image categorization. NHTSA is required to protect the identity of all crash victims. Image sanitization is just one step to fulfill this requirement.

HIGH IMAGE RESOLUTION ALLOWS DISTANT IDENTIFIERS TO BE ZOOMED IN, SANITIZE CAREFULLY.

The general rule is; mask (remove) all information that could identify crash victims and the exact location of the crash. This includes removing any time/date stamp imbedded on the image. Please be careful when sanitizing, not to unnecessarily cover important photographic documentation. Remember to position your vehicle so it will not appear in any photos. If your vehicle does appear in some photos make sure that the license plate is covered. Below are the guidelines for image sanitization.

Scene Images

Signs:

- Mask legible signs including; street names and addresses, telephone numbers, Interstate and exit numbers, mile markers, and local business names (e.g., Joe's Pizza) found on buildings and windows.
- Don't mask a sign if you can't read it.
- Don't mask business signs of nationwide organizations (e.g., K-Mart, Texaco).

Unrelated Vehicles:

- Mask the agency name on passing Police vehicles.
- Don't mask license plates of passing or parked vehicles, company logos on trucks, vans, taxis, buses, fire trucks, ambulances, etc.

Miscellaneous:

- Mask faces of any personnel and any person involved in the crash.
- Don't mask skylines containing unique buildings (e.g., Empire State Building).
- Don't mask faces of unrelated pedestrians and motorists.

Vehicle Images

Subject Vehicle:

- Mask license plates, company logos, and other unique identifiers.
- Mask identifying bumper stickers or window decals (e.g., parking permits).
- Mask any (or part of) identifying salvage lot numbers or insurance company claim numbers without obscuring any damage or evidence.

Unrelated Vehicles:

- Don't mask identifiers found on unrelated vehicles.

  Example 1 - Mask identifiers on unrelated vehicles when the vehicle is owned by the same **local** organization (e.g., Joe's Pizza, NYPD).

  Example 2 - Don't mask identifiers found on unrelated vehicles when the vehicle is owned by the same **nationwide** organization (e.g., FedEx, U-Haul).

Miscellaneous:

- Mask legible signs including; the Tow or Body Shop name, street names and addresses, telephone numbers, Interstate and Exit Numbers, local business names found on building and windows.
- Mask faces of any NHTSA contractor field staff, Tow/Body Shop, salvage yard personnel, or any person involved in the crash.

VIN, Plate, Tire Placard:

- Do not mask plates, VINS, or placards in images taken to identify case vehicles. These items are marked **UNSANITIZED** and must be categorized under Vehicle Identifiers. Manufacturer labels containing bar codes and quick response codes should be categorized in this manner as well.

Other Images

Child Restraint:

- Mask the last four numbers of the serial number on the manufacturer's label. The illustration in Figure 26 demonstrates the serial number and the characters to be sanitized.

Guidelines for Graphic Images

Graphic images that will be included in a case must be handled with special caution to ensure both privacy and respect. Adhere to the following guidelines when a graphic image will be included in the case:

- Graphic images would include those showing deceased victims, vivid injuries to the human body, or possibly the matter distributed as a result of such injuries. When graphic images are captured as part of data collection:
- Personal identifiers must be masked (face, etc.) unless important injury data would be compromised.
- The image must be identified by checking the graphic checkbox and writing "graphic" in the description box of the categorization program.

Guidelines for Outside Source Photos

Vehicle photos obtained from an outside source (e.g., law enforcement, tow yards or insurance companies) can be entered into cases following the guidelines below. As with all other images, sanitization guidelines (detailed on page 35) must be followed.

- All regular avenues to locate the vehicle must have been attempted.
- Outside source images are allowed only as a "last resort."
- All attempts must be documented in the Case Contact Log.
- Field staff must adhere to the vehicle inspection attempt guidelines
- The Zone Center may verify that every attempt was made to locate the vehicle.
- Images should not be requested from the police jurisdictions on a regular basis.
- There must be sufficient detail and image quality in at least one image for the Zone Center to be able to reasonably estimate a CDC.
- Outside source scene images will not be a substitute for a scene inspection and images completed by field personnel.
- All standard sanitization rules apply.

Appendix B

String Line Method

Frontal Impact

Begin with a full frontal view; all subsequent views should be taken following a counterclockwise scheme as illustrated in **Figure 1b**. All views should be taken at the damage level (beltline area) unless otherwise specified. The stands and string line should be visible in all images except where noted in image 1. The flash should be activated on all exterior images to help eliminate shadows, glare, etc.

Image No.	Description
1.	Two views of the entire frontal plane should be taken showing the direct and induced damage. One image should have no markers, scales, or equipment in place. The other image should include a vertical reference rod against the damaged area, a reference rod on the ground perpendicular to the center point of the damaged end plane, the stringline, and visual markers affixed to the damaged area. Ensure that the direct damage width is identified by green markers and that the evidence of direct damage is clearly visible in the views. Use close-up images as needed. If this vehicle's bumper overrode the vehicle or object that produced the damage, then, in addition to the standing image, take another view without the string line present from a kneeling position so as to capture any damage below the bumper.
1a.	The string line from the driver's side parallel to the frontal plane. This image should be taken from a **standing** position, parallel to and overlooking the string line.
1b.	The string line from the passenger's side parallel to the frontal plane. This image should be taken from a **standing** position, parallel to and overlooking the string line.

OBTAIN AN OVERHEAD IMAGE OF ALL IMPACTS (SEE PAGE 28).

- If measurements are required at two damage levels (i.e., bumper and grille) the bumper level views 1, 1a, 1b and close-up images should be followed by similar grille level views.

1c. View **(from a standing position)** down the passenger side of the vehicle aligned with the undamaged portion of the right side of the vehicle. Image shows the lateral movement (or lack thereof) of the end plane, which is helpful in determining PDOF. Additionally, this view should show the tape measures alongside the vehicle when applicable.

1d. View **(from a standing position)** down the driver side of the vehicle aligned with the undamaged portion of the left side of the vehicle. Image shows the lateral movement (or lack thereof) of the end plane, which is helpful in determining PDOF. Additionally, this view should show the tape measures alongside the vehicle when applicable.

2. Oblique (45 degree angle) photograph including entire front and driver side planes.

3. Photograph entire driver side. When there is direct damage to the driver's side, close-ups of direct damage will follow. When direct damage is not present to the driver's side, and only induced damage is present (i.e., glazing damage, pillar movement or integrity loss), close-up images of these should follow photograph 3.

4. Oblique (45 degree angle) photograph including entire driver side and rear planes.

4a. View (from a standing position) down the driver side of the vehicle aligned with the undamaged portion of the left side of the vehicle. Image shows the lateral movement (or lack thereof) of the end plane, which is helpful in determining PDOF. Additionally, this view should show the tape measures alongside the vehicle when applicable.

4b. View (from a standing position) down the passenger side of the vehicle aligned with the undamaged portion of the right side of the vehicle. Image shows the lateral movement (or lack thereof) of the end plane, which is helpful in determining PDOF. Additionally, this view should show the tape measures alongside the vehicle when applicable.

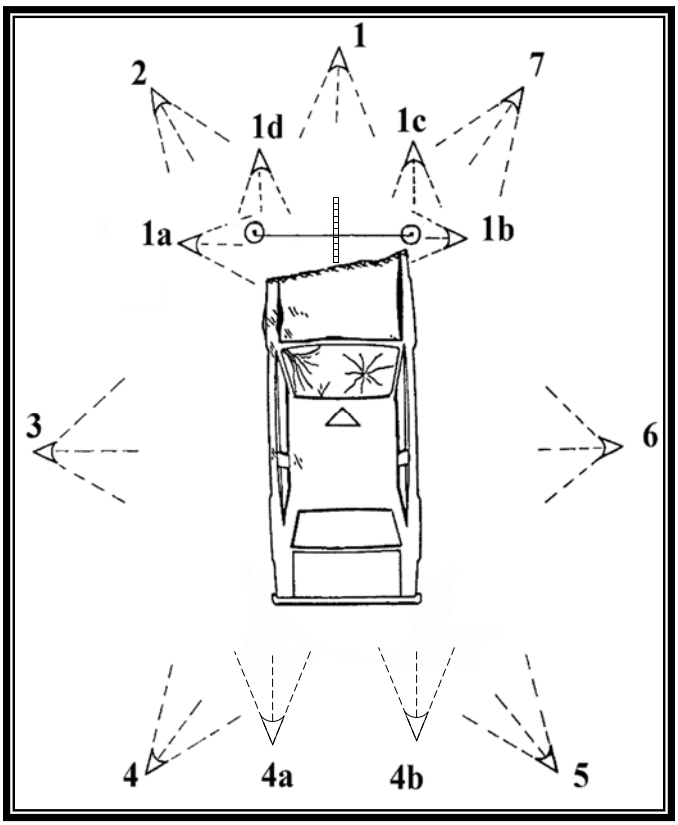

FIGURE

1b

Frontal Impact

5. Oblique (45 degree angle) photograph including entire rear and passenger side planes

Image No.	Description

6. Photograph entire passenger side. If direct damage is present, follow the procedure used on the driver's side (see image 3).

7. Oblique (45 degree angle) photograph including the entire front and passenger side planes.

Additional images required for damaged planes and components may include:

- **integrity loss** - include components such as doors, windows, etc.
  - include scale only if "adult head" size is questionable
- **pillar separation -** include close-up images
- **door latch/striker/hinge damage -** include close-up images of damaged component(s)
- **damaged sun roofs**
- **exterior intruding components -** include close-up images
- **images in support of field safety notifications**
- **damaged fuel tank -** include close-up images of damage or integrity loss

The preceding procedure should be used whenever field conditions allow. If vehicles are stored in close proximity to one another or are stored in a closed in area, overlapping images of the specific plane may be required to fully document the vehicle.

ALL IMAGES ARE TO BE OBTAINED WITH THE LICENSE PLATE(S) COVERED.

FOR EACH VEHICLE PHOTOGRAPHED, ONE IMAGE OF ONE LICENSE PLATE AND ONE IMAGE OF THE VIN ARE TO BE DOCUMENTED.

IF THIS IS A CERTIFIED ALTERED VEHICLE, OBTAIN AN IMAGE OF THE CERTIFICATION LABEL.

Rear Impact

Begin with a 45 degree angle including entire front and driver side planes. All subsequent views should be taken following a counterclockwise scheme as illustrated in **Figure 2b**. All views should be taken at the damage level (beltline area) unless otherwise specified. The string line should be visible in all images except where noted. The flash should be activated on all exterior images to help eliminate shadows, glare, etc.

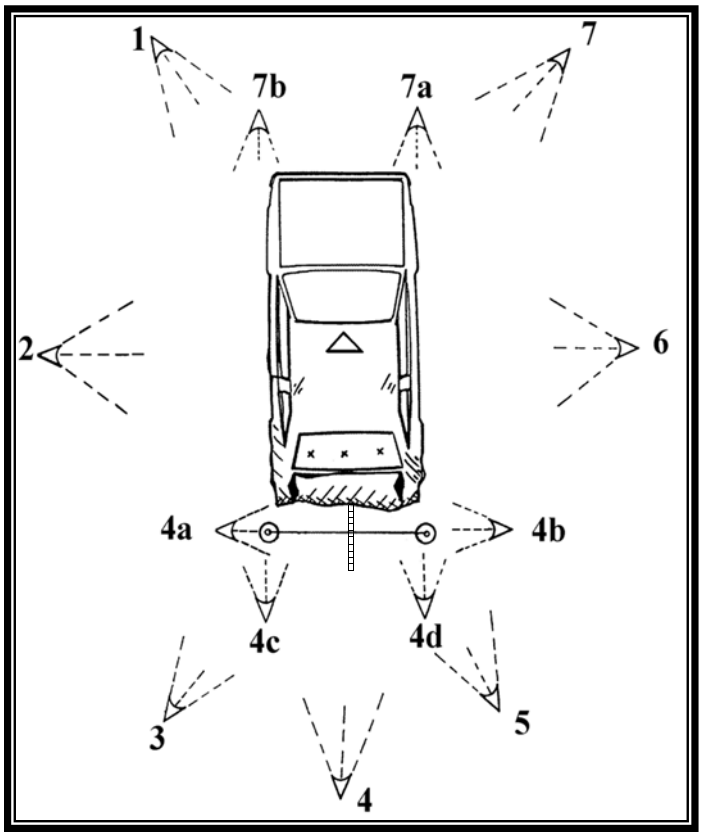

FIGURE **2b** Rear Impact

Image No.	Description
1.	Oblique (45 degree angle) photograph including the entire front and driver side planes.
2.	Photograph entire driver side. When there is direct damage to the driver side, close-ups of the direct damage will follow. When direct damage is not present and only induced damage is noted (i.e., glazing damage, pillar movement or integrity loss), close-up images of these should follow image 2.
3.	Oblique (45 degree angle) photograph including the entire driver side and rear planes.
4.	Two views of the entire back plane should be taken showing the direct and induced damage. One image should have no markers, scales, or equipment in place. The other image should include a vertical reference rod against the damaged area, a reference rod on the ground perpendicular to the center point of the damaged end plane, the stringline, and visual markers affixed to the damaged area. Ensure that the direct damage width is identified by green markers and that the evidence of direct damage is clearly visible in the views. If this vehicle's bumper overrode the vehicle or object that produced the damage, then, in addition to the standing image, take another image without the string line present from a kneeling position so as to capture any below bumper damage.
4a.	The string line from the driver's side parallel to the back plane. This image should be taken from a **standing** position, parallel to and overlooking the string line.

Image No.	Description

4b. The string line from the passenger's side parallel to the back plane. This image should be taken from a **standing** position, parallel to and overlooking the string line.

- If measurements are required at two damage levels (i.e., bumper and above bumper) the bumper level images (4, 4a, and 4b) should be followed by a similar set of above bumper images.

OBTAIN AN OVERHEAD IMAGE OF ALL IMPACTS (SEE PAGE 28).

4c. View **(from a standing position)** down the driver side of the vehicle aligned with the undamaged portion of the left side of the vehicle. This shows the lateral movement (or lack thereof) of the end plane which is helpful in determining PDOF. Additionally, this view should show the tape measures alongside the vehicle when applicable.

4d. View **(from a standing position)** down the passenger side of the vehicle aligned with the undamaged portion of the right side of the vehicle. This shows the lateral movement (or lack thereof) of the end plane which is helpful in determining PDOF. Additionally, this view should show the tape measures alongside the vehicle when applicable.

5. Oblique (45 degree angle) photograph including the rear and passenger side planes.

6. Photograph entire passenger side. Follow the instructions for image 2 with respect to direct damage, induced damage (i.e., glazing, pillars, and integrity) and additional close-up images.

7. Oblique (45 degree angle) photograph including the front and passenger side planes.

7a. View **(from a standing position)** down the passenger side of the vehicle aligned with the undamaged portion of the right side of the vehicle. This shows the lateral movement (or lack thereof) of the end plane which is helpful in determining PDOF. Additionally, this view should show the tape measures alongside the vehicle when applicable.

7b. View **(from a standing position)** down the driver side of the vehicle aligned with the undamaged portion of the left side of the vehicle. This shows the lateral movement (or lack thereof) of the end plane which is helpful in determining PDOF. Additionally, this view should show the tape measures alongside the vehicle when applicable.

Additional images required for damaged planes and components may include:

- **integrity loss** - include components such as doors, windows, etc.
  - include scale only if "adult head" size is questionable
- **pillar separation -** include close-up images
- **door latch/striker/hinge damage -** include close-up images of damaged component(s)
- **damaged sun roofs**
- **exterior intruding components -** include close-up images
- **images in support of field safety notifications**
- **damaged fuel tank -** include close-up images of damage or integrity loss

The preceding procedure should be used whenever field conditions allow. If vehicles are stored in close proximity to one another or are stored in a closed-in area, overlapping images of the specific plane may be required to fully document the vehicle.

ALL IMAGES ARE TO BE OBTAINED WITH THE LICENSE PLATE(S) COVERED.

FOR EACH VEHICLE PHOTOGRAPHED, ONE IMAGE OF ONE LICENSE PLATE AND ONE IMAGE OF THE VIN ARE TO BE DOCUMENTED.

IF THIS IS A CERTIFIED ALTERED VEHICLE, OBTAIN AN IMAGE OF THE CERTIFICATION LABEL.

Side Impact

Begin with full front view of the vehicle. All subsequent views should be taken following a counterclockwise scheme as illustrated in **Figure 3b**. All views should be taken at the damage level (beltline area) unless otherwise specified. The string line should be visible in all images except where noted. The flash should be activated on all exterior images to help eliminate shadows, glare, etc.

Image No.	Description
1.	Photograph entire front plane. When direct damage is present on the frontal plane (see Figure 1b, views 1a and 1b), views 1a and 1b will follow image # 1. Close-up images of the direct damage will follow.
2.	Oblique (45 degree angle) photograph including the front and driver side planes.
3.	Photograph entire driver side. In Figure 3b, the damage is illustrated on the passenger side. For a driver side impact, views 8, 8a, and 8b should be obtained on the driver side of the vehicle and inserted following view number 3.
4.	Oblique (45 degree angle) photograph including entire driver side and rear planes.
5.	Photograph the entire rear plane. When direct damage is present on the rear plane (see Figure 2b - views 4a and 4b), views 5a and 5b would follow view 5. Close-up images of the direct damage would also be included.
6.	Oblique (45 degree angle) photograph including entire rear and passenger side planes.
7.	Photograph the entire passenger side.
8.	Two images of the entire side plane should be taken showing the direct and induced damage. One image should have no markers, scales, or equipment in place. The other image should include a vertical reference rod against the damaged area, a reference rod on the ground perpendicular to the center point of the damaged wheel base, the stringline, and visual markers affixed to the damaged area. Ensure the direct damage width is identified with green markers. If the direct damage width is significantly different than the Field L, a separate image identifying the direct damage is required.
8a.	The string line from the rearmost position along the side plane at the vehicle. Picture should be taken at a standing position parallel to and overlooking the string line. The point defined side extent zones must be visible in this image.

OBTAIN AN OVERHEAD IMAGE OF ALL IMPACTS (SEE PAGE 28).

IF THE INSPECTION INCLUDES DOOR MEASUREMENTS (DSD, ETC.), ENSURE THAT THE DEVICE USED TO TAKE THE MEASUREMENTS ARE VISIBLE IN AN IMAGE.

Image No.	Description

FIGURE 3b Side Impact

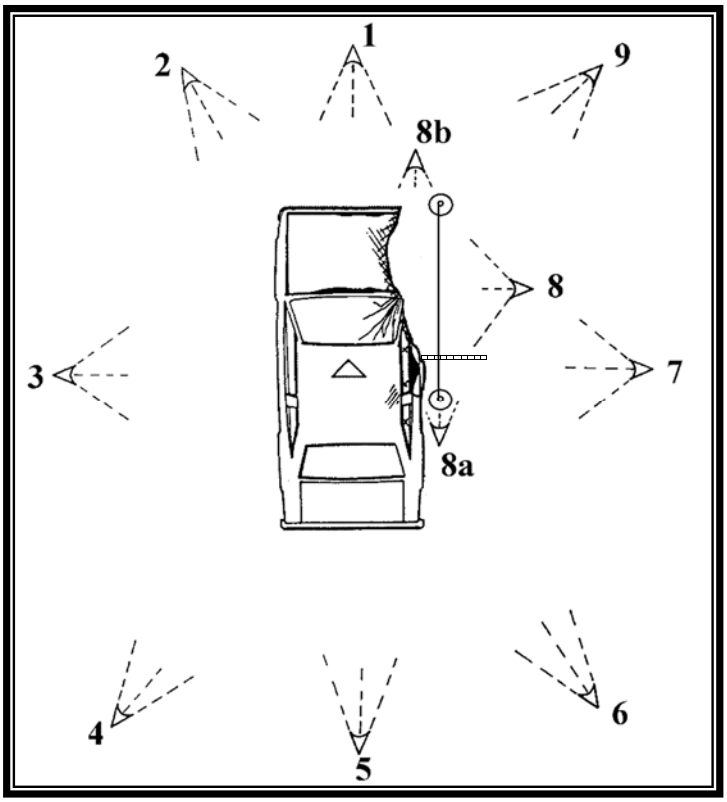

8b. The string line from the foremost position along the side plane at the vehicle. Picture should be taken at a standing position parallel to and overlooking the string line. The point defined side extent zones must be visible in this image.

- If measurements are required at two damage levels (i.e., mid-door and sill), the mid-door level views 8, 8a, 8b and close-ups should be followed by similar sill level views. The contour gauge should be present in each of these sequences.

9. Oblique (45 degree angle) photograph including the front and passenger side planes.

Additional images required for damaged planes and components may include:

- **integrity loss** - include components such as doors, windows, etc.
  - include scale only if "adult head" size is questionable
- **pillar separation -** include close-up images
- **door latch/striker/hinge damage -** include close-up images of damaged component(s)
- **damaged sun roofs**
- **exterior intruding components -** include close-up images
- **images in support of field safety notifications**
- **damaged fuel tank -** include close-up images of damage or integrity loss

The preceding procedure should be used whenever field conditions allow. If vehicles are stored in close proximity to one another or are stored in a closed-in area, overlapping images of the specific plane may be required to fully document the vehicle.

ALL IMAGES ARE TO BE OBTAINED WITH THE LICENSE PLATE(S) COVERED.

FOR EACH VEHICLE PHOTOGRAPHED, ONE IMAGE OF ONE LICENSE PLATE AND ONE IMAGE OF THE VIN ARE TO BE DOCUMENTED.

IF THIS IS A CERTIFIED ALTERED VEHICLE, OBTAIN AN IMAGE OF THE CERTIFICATION LABEL.