Check for updates

ACM DIGITAL LIBRARY

Association for Computing Machinery

acm open

Latest updates: https://dl.acm.org/doi/10.1145/3647649.3647652

RESEARCH-ARTICLE

The Tire Sidewall Key Information Region Detection Algorithm based on the Improvement of YOLOv5

MENGYANG LI, Anhui Polytechnic University, Wuhu, Anhui, China

NAN YAN, Anhui Polytechnic University, Wuhu, Anhui, China

Open Access Support provided by:

Anhui Polytechnic University

PDF Download
3647649.3647652.pdf
25 March 2026
Total Citations: 0
Total Downloads: 174

Published: 03 May 2024

Citation in BibTeX format

ICIGP 2024: 2024 the 7th International Conference on Image and Graphics Processing
January 19 - 21, 2024
Beijing, China

ICIGP '24: Proceedings of the 2024 7th International Conference on Image and Graphics Processing (January 2024)
https://doi.org/10.1145/3647649.3647652
ISBN: 9798400716720

The Tire Sidewall Key Information Region Detection Algorithm based on the Improvement of YOLOv5

Mengyang Li
School of Computer and Information, Anhui Polytechnic University, China
2220910116@stu.ahpu.edu.cn

Nan Yan*
School of Computer and Information, Anhui Polytechnic University, Anhui Institute of Future Technology, China
jiffyan@ahpu.edu.cn

ABSTRACT

The recognition of tire sidewall text refers to the technology that automatically detects and extracts textual information on tire sidewalls in dark background. This article explores the importance of tire sidewall text recognition and proposes a lightweight network for detecting key imprint text regions based on You Only Look Once v5 (YOLOv5). To enhance detection accuracy whilst minimizing parameter and computational complexity, this article replaces the backbone network of YOLOv5 with the EMO network and introduces the C3Faster module proposed in this article to replace the original C3 module in YOLOv5's Neck network, because convolution operations in the C3 module introduce a lot of computation. This accelerates inference while mitigating parameters and computational complexity. Additionally, the number of detection heads is changed to provide more suitable scale outputs on the dataset. Experimental results demonstrate that the refined algorithm yields a 12.1% enhancement in accuracy when compared to YOLOv5s.

CCS CONCEPTS

• **Computer systems organization**; • **Architectures**; • **Other architectures**; • **Neural networks**;

KEYWORDS

Object Detection, Deep learning, YOLOv5, EMO, PConv, Detection layer

ACM Reference Format:
Mengyang Li and Nan Yan. 2024. The Tire Sidewall Key Information Region Detection Algorithm based on the Improvement of YOLOv5. In *2024 the 7th International Conference on Image and Graphics Processing (ICIGP 2024), January 19–21, 2024, Beijing, China.* ACM, New York, NY, USA, 6 pages. https://doi.org/10.1145/3647649.3647652

1 INTRODUCTION

The car tire is a crucial component that bears the weight of the vehicle and makes direct contact with the road surface. It plays a vital role in ensuring the car's service life and safe driving. In the automobile manufacturing industry, it is essential to accurately read and match the tire's tread information. Any incorrect identification information can lead to unpredictable consequences.

The tire specifications and Department of Transportation(DOT) production date information on the tire sidewall are crucial for identifying tires and are considered one of the most important features. However, traditional identification method suffers from low efficiency and the potential for human errors. Tire sidewall text is often embossed, and both embossed and raised characters on the tire surface are three-dimensional characters with the same color as the tire body [1]. Automated production is a current trend in intelligent production [2], In this regard, the latest developments in deep learning-based object detection have provided methods to address this issue.

Target detection is distinct from target classification in that it necessitates background training samples and training samples of the detection target [3].In recent years, significant advancements have been made in target area detection with the application of various deep learning-based object detection algorithms, such as Regions with CNN features(R-CNN) [4],Faster R-CNN [5], Cascade R-CNN [6] and Single Shot MultiBox Detector(SSD) [7], You Only Look Once(YOLO) [8].

The YOLO series algorithm is composed of one-stage detection methods., including YOLOv5, have gained popularity due to their fast detection speed and high accuracy. YOLOv5, in particular, is widely used and offers the advantage of easy application in various scenarios. It has been regarded as one of the most accurate and fastest algorithms for detecting objects in industrial settings [9] [10].

When YOLOv5 is used to detect the area where key information text is located on the tire side, although the model size, parameters, and computational complexity are relatively small, the accuracy of the model may be compromised. On the other hand, when using the YOLOv5m or YOLOv5l models, the model size and parameters increase significantly.

To solve the above problems, this paper proposes an improved algorithm based on YOLOv5. This algorithm can be applied to instance segmentation and object detection in images, achieving a balance between parameters, computational complexity, model size, and improved accuracy in detecting embossed text on tire sidewalls.

The work carried out in this paper is as follows:

(1) In order to extract more features, the EMO network is used instead of the YOLOv5 backbone network.
(2) To minimize the computational load generated by the convolution operation in the C3 module and to enhance the speed of inference, we have utilized PConv in place of Conv.

*Nan Yan is the corresponding author

Permission to make digital or hard copies of all or part of this work for personal or classroom use is granted without fee provided that copies are not made or distributed for profit or commercial advantage and that copies bear this notice and the full citation on the first page. Copyrights for components of this work owned by others than the author(s) must be honored. Abstracting with credit is permitted. To copy otherwise, or republish, to post on servers or to redistribute to lists, requires prior specific permission and/or a fee. Request permissions from permissions@acm.org.
ICIGP 2024, January 19–21, 2024, Beijing, China
© 2024 Copyright held by the owner/author(s). Publication rights licensed to ACM.
ACM ISBN 979-8-4007-1672-0/24/01
https://doi.org/10.1145/3647649.3647652

(3) Select the appropriate detection layer. In this paper, the selection will remove the smaller detection layer, reduce the interference of the smaller detection layer to the correct reasoning, and focus on the larger receptive field.

2 RELATED WORK

2.1 Development of YOLOv5

YOLOv5 is an object detection algorithm based on deep learning that employs a one-stage detection strategy, Transforming the task of object detection into a problem of regression [11]. Compared to conventional two-stage methodologies, YOLOv5 permits more rapid object detection. The input image is partitioned into grids, with bounding boxes and corresponding probabilities for each class predicted for every grid. The YOLOv5 network is composed of four distinct sections, namely the input, backbone network, neck network, and prediction head.

The default backbone network of YOLOv5 is CSPDarknet53, which is an improved version of the Darknet network structure. In the Neck part, YOLOv5 adopts the FPN and PAN structure. The Head of YOLOv5 uses an anchor box-based detection method. In the detection layer, The feature map is partitioned, with each region responsible for predicting the positions of bounding boxes, target classes, and confidence scores for a specific set of anchor boxes. These predictions are typically implemented using convolutional and fully connected layers.

However, due to the limitation of its backbone network, YOLOv5 has poor detection effect on similar targets in dark background.

2.2 Transformer is used for Object Detection

In recent years, Transformer models have gained substantial popularity within the object detection field. While originally introduced for natural language processing (NLP) tasks, Transformers have also been applied to computer vision tasks, including object detection. This has led to several neural network models emerging, which are based on Transformers, such as Swin Transformer [12] and Next-vit [13], which have brought advancements to the field of object detection. However, these Transformer-based models often come with high computational complexity and larger model sizes, making it essential to explore lightweight variants of Transformers.

3 PRINCIPLE OF THE TIREYOLO-S ALGORITHM BASED ON YOLOV5 IMPROVEMENT

3.1 Backbone Replacement - Lightweight Transformer-based EMO Network

Since the backbone network of YOLOv5 adopts the CSPDarknet53 network, although lightweight, the feature extraction of similar objects with darker background color is insufficient. Therefore, it is necessary to find a backbone network that can extract more features.

In reference [14], the authors reconsidered the Inverted Residual Block from MobileNetV2 and the MHSA/FFN modules from Transformers. They proposed a simple and efficient module called the Inverted Residual Mobile Block (iRMB) and designed a lightweight network model called EMO specifically for mobile devices.

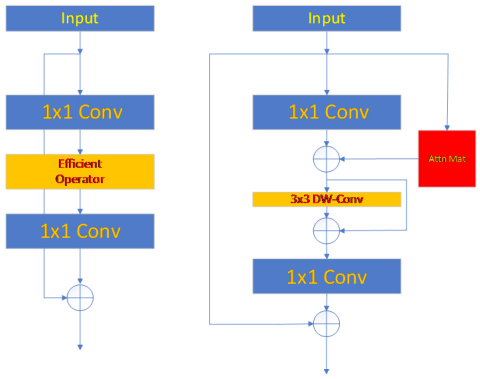

Figure 1: The Meta Mobile Block and Inverted Residual Mobile Block

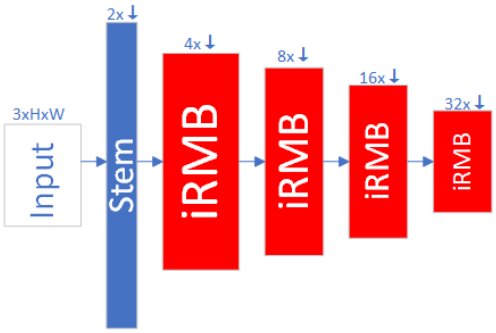

Figure 2: The network EMO

EMO surpasses state-of-the-art (SOTA) models based on CNNs and Transformers with relatively lower parameters and FLOPs.

First, they combined the multi-head attention mechanism and FFN module from Transformers with the inverted residual module from MobileNetV2 to create the Meta Mobile Block. Building upon this, they further designed an efficient inverted residual module called the Inverted Residual Mobile Block, which combines the characteristics of CNNs and Transformers. It consists of Convolution (Conv), Depthwise Convolution (DWConv), and Efficient Weighted Multi-Head Self-Attention (EW-MHSA).

Based on these building blocks, the EMO neural network is designed. EMO is composed solely of iRMBs without any other complex operators. In the network's design details, EW-MHSA is used in Stage 3 and Stage 4, BN (Batch Normalization) + SiLU (Sigmoid Linear Unit) is used in Stage 1 and Stage 2, and LN (Layer Normalization) + ReLU (Rectified Linear Unit) is used in Stage 3 and Stage 4 to further enhance the stability and speed of EMO. The Meta Mobile Block and Inverted Residual Mobile Block in Figure1, the network EMO model is depicted in Figure 2.

When we use the EMO network instead of the YOLOv5 backbone network, we can extract more features from similar objects in a dark background.

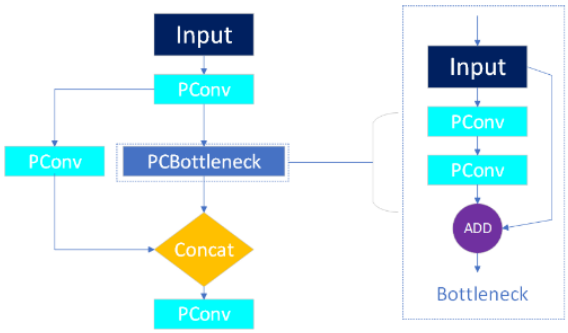

Figure 3: C3Faster

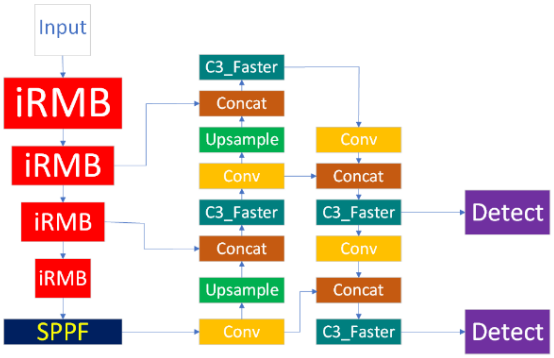

Figure 4: TireYOLO-S

Figure 5: Segmentation Results

3.2 Better and Faster Lightweight Feature Extraction Module - C3Faster

The C3 module is one of the main feature extraction modules. It consists of a series of convolutional layers, typically including multiple 3x3 convolutions. The objective of the C3 module is to augment the network's capability to understand the environmental data of objects through expanding its receptive field and expressive capacity.

However, this work can be further improved. In reference [15], an improved module called PConv is proposed, based on depthwise separable convolution (DWConv) [16]. The PConv design method applies regular convolutions to specific input channels to extract spatial characteristics, while preserving the unaltered state of the remaining channels. This approach considerably reduces memory access.

Taking advantage of the lightweight characteristics of PConv, this paper proposes the integration of the C3 module and the PConv module to form the C3Faster module. It achieves a further lightweight design while extracting more features and maintaining the parameter count. The structural diagram is shown in Figure 3.

3.3 Selecting the Appropriate Detection Layer

In YOLOv5, the P3 detection head is one of the detection heads in the object detection network. It is responsible for performing object detection on lower-level feature maps, which typically correspond to regions of the image with lower resolutions. It mainly focuses on detecting smaller objects.

In the tire dataset, due to the strong similarity between tire side characters, lower-resolution features may contain more noise or redundant information for object detection. This can lead to erroneous outputs in the predicted bounding boxes. Therefore, the P3 detection head is removed to allow the model to focus more on higher-resolution features. Higher-resolution features often contain richer semantic information. By placing more emphasis on these features, the model's discriminative ability and accuracy in detecting objects can be improved.

3.4 TireYOLO-S

To address the issues raised in this article, A network model based on the architecture of YOLOv5 is presented in this paper. In order to achieve this, the Backbone and Neck layer of YOLOv5 have been improved, which is reflected in the replacement of backbone network with EMO, the introduction of C3Faster and the number of detection layers. The overall network architecture of TireYolo-S is shown in Figure 4.

4 EXPERIMENTAL DESIGN AND EXPERIMENTAL RESULTS

4.1 Datasets Description

Because there is currently no suitable open source data set. The image data set adopted in this paper is all acquired by setting up cameras in natural scenes, and a total of 812 images are collected. After the images are collected, they are labelled by manual means. Firstly, the image is preprocessed and the tire area is segmented, and finally 812 tire area pictures are segmsegmed from natural scenes. The segmentation results are shown in Figure 5.

The datasets utilised in this paper's object detection experiment have been segregated into a training data, verification data and test data at an 8:1:1 ratio.

4.2 Experimental Environment

The hardware environments used in this experiment are as follows: CPU: Intel Core i9-10900K, GPU: NVIDIA GeForce GTX 4090(24g), RAM: 32G, hard disk: 2T Seagate hard disk, and software environment: operating system: Ubuntu20.02, CUDA version 11.8, pytorch version 2.0.1, python version 3.9.2.

4.3 Training Parameter Setting

The training parameters used in this experiment are initialization parameters of yolov5s. The training parameters of the model are fine-tuned through training to achieve the best training effect. Some experimental parameters are shown in Table 1.

Table 1: Training Parameter

Parameters	Value
Batch size	16
Momentum	0.937
Weight decay	0.0005
Learn rate	0.01
Epoch	500

4.4 Evaluation Index

In order to objectively evaluate model size, parameter number, calculation amount and detection accuracy of key information areas of tires, mAP@50:95 average accuracy is used in this paper. Its Mean Average Precision (mAP) calculation standard combines Precision (P) and Recall (R). At present, it is a commonly used evaluation index for the detection effect of models. The size of the model is measured by Parameters of the model and GFLOPs of the model. The size of the model is directly related to the actual use and deployment experience in the later stage. The evaluation indicators are analyzed and introduced in detail below:

In target detection, Positive example and Negative example are two categories used to describe Bounding Box.

A Positive example is when there is enough overlap or Intersection over Union (IoU) between the candidate box and the true target box to be considered a correctly detected target. It can also be called True Positives (TP), while targets that are incorrectly classified as Positive examples are called False Positives (FP).

A Negative example is a candidate box that has little or no overlap with all true target boxes and is considered an incorrectly detected target. Also known as True Negative (TN), targets that are incorrectly classified as negative examples are called False Negatives (FN).

Recall is the percentage of actual positive cases that are correctly predicted by the model to be positive. The calculation of the recall rate is indicative of the model's capacity for identifying genuine positive examples. The procedure for determining this rate is as follows:

$$R = \frac{TP}{(TP + FN)}$$

Precision is the percentage of all samples that the model correctly predicts. It measures the overall predictive accuracy of the model. The accuracy rate is calculated in the following way:

$$P = \frac{TP}{(TP + FP)}$$

mAP@50:95 calculates the Average Precision (AP) value of each category with the step size of 0.05 to the value of each category using the following formula:

$$mAP = \frac{\Sigma_{i=1}^{k} AP_i}{k}$$

4.5 Ablation Experiment and Contrast Experiment

In order to ensure the real effectiveness of the experiment in this paper and verify the superiority of the improved algorithm, ablation experiment is used to compare the YOLOv5s model and replace the backbone of the YOLOv5s model with a new model (Yolov5s-EMO) of EMO. The C3Faster module is integrated into the YOLOv5s model (YOLOv5S-C3Faster), the YOLOv5s detection layer number model (YOLOv5S-P45) is changed, and all the innovations TireYOLO-S are combined. The ablation experiment results are shown in Table 2, the results of the comparative experiment are shown in Table 3.

The ablation experiment analysis reveals that the inclusion of improved modules leads to a significant enhancement in the overall accuracy of the model. Compared to the original model, the improved TireYOLO-S network demonstrates a 12.1 percentage point increase in the mAP@0.5:0.95, a 13.3 percentage point increase in precision (P), and a 16.1 percentage point increase in recall rate (R). While reducing the number of model parameters results in a slight increase in computational load, it effectively balances the trade-off between parameter count, computational complexity, and target detection accuracy. This establishes a foundation for future practical use and deployment by providing an excellent user experience.

The YOLOv5s-EMO network introduces an EMO-based network in the backbone network, which improves performance. However, it also increases computational cost. On the other hand, the YOLOv5s-C3Faster network reduces computational cost by lightweighting the C3 module, but this results in a drop in accuracy. YOLOv5s-P45 improves accuracy by tweaking the detection layer but does not sufficiently reduce weight. TireYOLO-S combines the strengths of these improvements to achieve both improved accuracy and lightweighting while circumventing their drawbacks.

Through analysis and comparative experiments with YOLOv5s, YOLOv3-tiny, YOLOv6s, and YOLOv7-tiny,YOLOv8s.the improved model proposed in this paper demonstrates significant improvements in accuracy, recall rate, mAP@0.5:0.95, and a notable reduction in Params. The increase in computational load (GFLOPs) is justified by achieving a balance between model size, parameter count, computational complexity, and the accuracy of detecting key information areas on the tire.

5 APPLICATION IN ACTUAL SCENARIOS

To accurately demonstrate the performance of the proposed algorithm in real-world scenarios, a random image was chosen from the field dataset and compared with the original model for validation, as shown in Figure 6.

The two columns of images above illustrate the outcome of the trained model being tested on an identical test image. The left column shows the original YOLOv5s model's output, while the right column represents the model proposed in this paper. A noticeable difference is observed between the two. The YOLOv5s model exhibits instances of missed detections, whereas the improved model demonstrates enhanced feature extraction capabilities, correctly identifying the target.

The improved model addresses the issues of missed detections and misdetection of key information on the tire sidewalls. It exhibits higher confidence levels compared to the original model and performs better in detecting the areas containing key information.

Table 2: Ablation Experiment

Model	mAP@50:95	P	R	Params	GFLOPs
YOLOv5s	0.546	0.826	0.706	7.02M	15.8
YOLOv5s-EMO	0.578	0.884	0.751	4.30M	29.5
YOLOv5s-C3Faster	0.44	0.757	0.615	5.79M	12.6
YOLOv5s-P45	0.612	0.909	0.751	7.01M	15.7
YOLOv5s-EMO-P45	0.62	0.912	0.852	4.30M	29.5
YOLOv5s-EMO-C3Faster	0.582	0.848	0.81	3.75M	28.4
YOLOv5s-C3Faster-P45	0.608	0.928	0.754	5.78M	12.6
TireYOLO-S	0.667	0.959	0.867	3.74M	28.3

Table 3: Contrast Experiment

Model	mAP@50:95	P	R	Params	GFLOPs
YOLOv5s	0.546	0.826	0.706	7.02M	15.8
YOLOv3-tiny	0.553	0.878	0.81	8.67M	12.9
YOLOv6s	0.565	0.757	0.725	16.2M	44.0
YOLOv7-tiny	0.49	0.807	0.681	6.00M	13.0
YOLOv8s	0.614	0.79	0.799	11.2M	28.4
TireYOLO-S	0.667	0.959	0.867	3.74M	28.3

Figure 6: Comparison of Actual scenarios

6 CONCLUSION

The proposed TireYOLO-S algorithm outperforms the original YOLOv5s and other YOLO series algorithms in various aspects, with a minimal increase in computational load. It provides a promising and effective solution in the field of tire side text detection.

ACKNOWLEDGMENTS

This work is supported by Research and design of new energy vehicle related terminal detection system based on cloud edge Collaboration (Anhui Institute of Future Technology Enterprise Cooperation Project) 2023qyhz11.

REFERENCES

[1] Zeng Y, Xiang A, Mou X. Research on an image acquisition System based on Camera Link [J]. Computer Application and Software, 2010, 27(11): 245-249.

[2] Florian Spiess, Lucas Reinhart, Norbert Strobel, Dennis Kaiser, Samuel Kounev, and Tobias Kaupp, "People Detection with Depth Silhouettes and Convolutional Neural Networks on a Mobile Robot," Journal of Image and Graphics, Vol. 9, No. 4, pp. 135-139, December 2021. doi: 10.18178/joig.9.4.135-139

[3] Edisanter Lo, "Target Detection Algorithms in Hyperspectral Imaging Based on Discriminant Analysis," Journal of Image and Graphics, Vol. 7, No. 4, pp. 140-144, December 2019. doi: 10.18178/joig.7.4.140-144

[4] Girshick R, Donahue J, Darrell T, *et al.* Rich feature hierarchies for accurate object detection and semantic segmentation[C]//Proceedings of the IEEE conference on computer vision and pattern recognition. 2014: 580-587.

[5] Ren S, He K, Girshick R, *et al.* (2015)Faster r-cnn: Towards real-time object detection with region proposal networks[J]. Advances in neural information processing systems. 9199(10.5555): 2969239-2969250.

[6] Cai Z, Vasconcelos N.(2018) Cascade r-cnn: Delving into high quality object detection[C]//Proceedings of the IEEE conference on computer vision and pattern recognition. 2018: 6154-6162.

[7] Liu W, Anguelov D, Erhan D, *et al.* Ssd: Single shot multibox detector[C]//Computer Vision–ECCV 2016: 14th European Conference, Amsterdam, The Netherlands, October 11–14, 2016, Proceedings, Part I 14. Springer International Publishing, 2016: 21-37.doi: 10.1007/978-3-319-46448-0_2

[8] Redmon J, Divvala S, Girshick R, *et al.* You only look once: Unified, real-time object detection[C]//Proceedings of the IEEE conference on computer vision and pattern recognition. 2016: 779-788,doi: 10.1109/CVPR.2016.91..

[9] Zhao J, Zhang X, Yan J, *et al.* A wheat spike detection method in UAV images based on improved YOLOv5[J]. Remote Sensing, 2021, 13(16): 3095.

[10] Zhu L, Geng X, Li Z, *et al.* Improving YOLOv5 with attention mechanism for detecting boulders from planetary images[J]. Remote Sensing, 2021, 13(18): 3776.

[11] Zhang K; Zhang P; Chen J; Long M; Lin W. Dangerous Goods Detection based on improved YOLOv5s X-ray image [J]. Journal of Shaanxi University of Science and Technology, 2023, 41 (06): 176-183+200. doi:10.19481/j.cnki.issn2096-398x.2023.06.006

[12] Liu Z, Lin Y, Cao Y, *et al.* Swin transformer: Hierarchical vision transformer using shifted windows[C]//Proceedings of the IEEE/CVF international conference on computer vision. 2021: 10012-10022.doi: 10.1109/ICCV48922.2021.00986.

[13] Li J, Xia X, Li W, *et al.* Next-vit: Next generation vision transformer for efficient deployment in realistic industrial scenarios[J]. arXiv preprint arXiv:2207.05501, 2022.

[14] Zhang J, Li X, Li J, *et al.* Rethinking mobile block for efficient neural models[J]. arXiv preprint arXiv:2301.01146, 2023.

[15] Chen J, Kao S, He H, *et al.* Run, Don't Walk: Chasing Higher FLOPS for Faster Neural Networks[C]//Proceedings of the IEEE/CVF Conference on Computer Vision and Pattern Recognition. 2023: 12021-12031.doi: 10.1109/CVPR52729.2023.01157.

[16] Chollet F. Xception: Deep learning with depthwise separable convolutions[C]//Proceedings of the IEEE conference on computer vision and pattern recognition. 2017: 1251-1258.