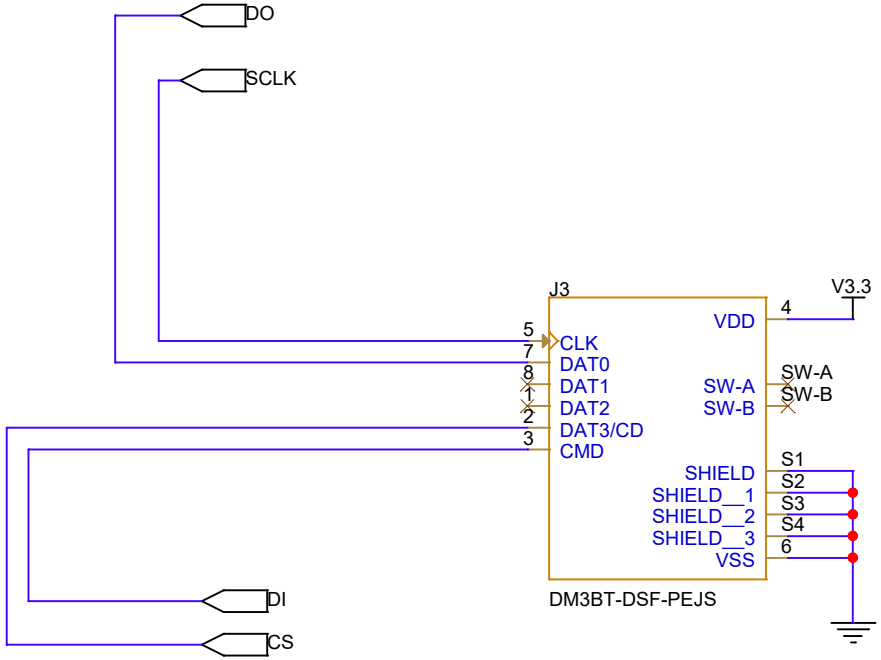

Notes:
1. This component is different from the real SD card connector. In the real connector there are 8 pins.
2. We use SPI protocol for SD card

Title <Title>		
Size A	Document Number <Doc>	Rev <RevCo
Date: Tuesday, November 12, 2024	Sheet 1 of 1	