1/19/2026

Design and Implementation of a Multifunctional Digital Clock System

Submitted by:
Muhammad Faizan (F2023019004)
Sami Ullah Wattoo (F2023019011)
Hammad Ahmed (F2023019023)

Submitted to:
Maryam Shakeel

Contents

Abstract 2
1. Introduction 2
2. Objectives 2
3. Components Used 2
3.1 Microcontroller Board (UNO R3 / ESP32) 2
3.2 Real Time Clock (RTC) Module – DS1307 3
3.3 I2C LCD (16×2 Display) 3
3.4 DHT Temperature and Humidity Sensor 3
3.5 Push Buttons 3
4. Pin Configuration 3
5. Working Principle 3
6. Flowchart Description 4
7. Applications 4
9. Cost Estimation 5
10. Conclusion 5
Code: 6

Abstract

This project presents the design and implementation of a multifunctional digital clock system based on a microcontroller. The system is capable of displaying real-time clock information along with ambient temperature and humidity values. A Real Time Clock (RTC) module is used to ensure accurate timekeeping even during power interruptions. An I2C-based LCD is employed for data visualization, reducing wiring complexity and improving system efficiency. Additionally, a stopwatch feature is implemented using push buttons to enhance system functionality. The project demonstrates practical knowledge of embedded systems, sensor interfacing, and real-time applications.

1. Introduction

Timekeeping systems play a vital role in modern electronic and embedded applications. With advancements in microcontroller technology, digital clocks have evolved from simple time display devices into multifunctional systems capable of monitoring environmental parameters and performing auxiliary tasks. This project focuses on the development of a digital clock system that integrates real-time clock functionality with temperature and humidity monitoring. The system is designed using a microcontroller, an RTC module, a DHT sensor, and an I2C LCD. The project serves as an effective learning platform for understanding embedded system design, real-time processing, and peripheral interfacing.

2. Objectives

The primary objective of this project is to design and implement a reliable digital clock system using a microcontroller-based platform. The project aims to display accurate time and date information obtained from an RTC module while simultaneously monitoring environmental conditions such as temperature and humidity using a digital sensor. Another objective is to incorporate a stopwatch function controlled through push buttons to extend system usability. Through this project, practical skills in embedded programming, hardware interfacing, and system integration are developed.

3. Components Used

3.1 Microcontroller Board (UNO R3 / ESP32)

The microcontroller board acts as the main control unit of the digital clock system. It is responsible for reading data from the RTC and DHT sensor, processing user input from push buttons, and controlling the LCD display. All logical operations and timing calculations are handled by the microcontroller, making it the core of the entire system.

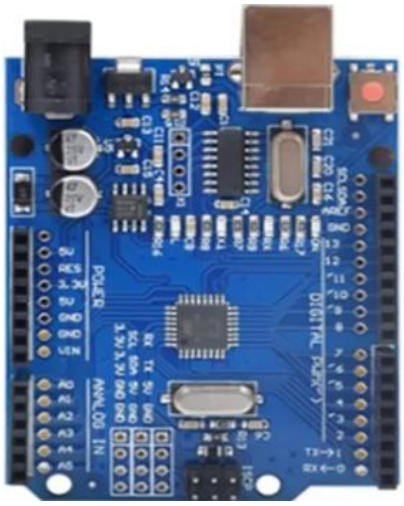

3.2 Real Time Clock (RTC) Module – DS1307

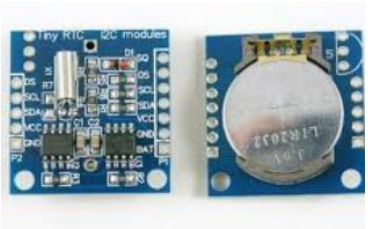

The RTC DS1307 module is used to maintain accurate time and date information. It operates independently using a coin cell battery, allowing the clock to retain correct time even when the main power supply is disconnected. The module communicates with the microcontroller through the I2C protocol, ensuring reliable and efficient data transfer.

3.3 I2C LCD (16×2 Display)

The 16×2 LCD with an I2C interface is used to display time, temperature, humidity, and stopwatch information. The I2C communication significantly reduces the number of required connections by using only two data lines. This improves circuit simplicity and makes the system easier to assemble and troubleshoot.

3.4 DHT Temperature and Humidity Sensor

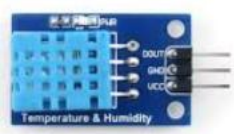

The DHT sensor is used to measure ambient temperature and relative humidity. It provides digital output, which makes it easy to interface with the microcontroller. The sensor is suitable for indoor environmental monitoring and provides sufficiently accurate readings for educational and basic monitoring applications.

3.5 Push Buttons

Push buttons are used to provide user interaction with the system. One button is used to switch between clock mode and stopwatch mode, while the remaining buttons control the start, stop, and reset operations of the stopwatch. The buttons are connected using internal pull-up resistors to ensure stable and noise-free operation.

4. Pin Configuration

Proper pin configuration is essential for the correct operation of the system. The DHT sensor is connected to a dedicated digital input pin of the microcontroller for reliable data communication. The RTC module and I2C LCD share the same SDA and SCL lines, enabling multiple devices to communicate over the I2C bus efficiently. Push buttons are connected to digital input pins and configured using internal pull-up resistors to ensure stable input readings. All components share a common ground reference to maintain signal integrity and system stability.

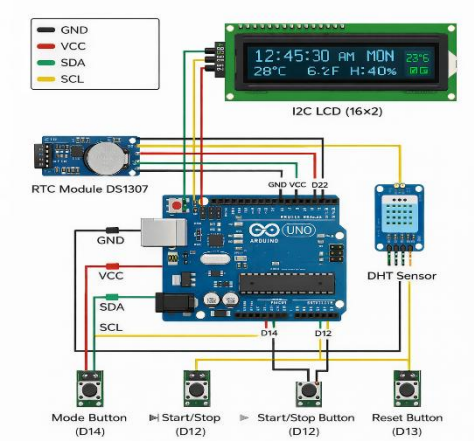

Figure: Pin configuration and wiring diagram of the multifunctional digital clock system

5. Working Principle

Upon powering the system, the microcontroller initializes all connected hardware modules, including the RTC, LCD, and DHT sensor. The RTC continuously supplies real-time clock data, ensuring accurate time and date information. The DHT sensor

periodically measures temperature and humidity values and transmits the data to the microcontroller. The processed information is then displayed on the LCD. User input through push buttons allows switching between clock mode and stopwatch mode. In stopwatch mode, elapsed time is calculated using internal timing functions of the microcontroller and updated in real time on the display.

6. Flowchart Description

The operational flow of the system begins with hardware initialization and variable setup. After initialization, the system continuously monitors button inputs to determine the selected mode of operation. If the clock mode is active, real-time clock data along with sensor readings are displayed on the LCD. When the stopwatch mode is selected, the system measures elapsed time and updates the display accordingly. This process is executed repeatedly within the main program loop to ensure continuous and real-time system operation.

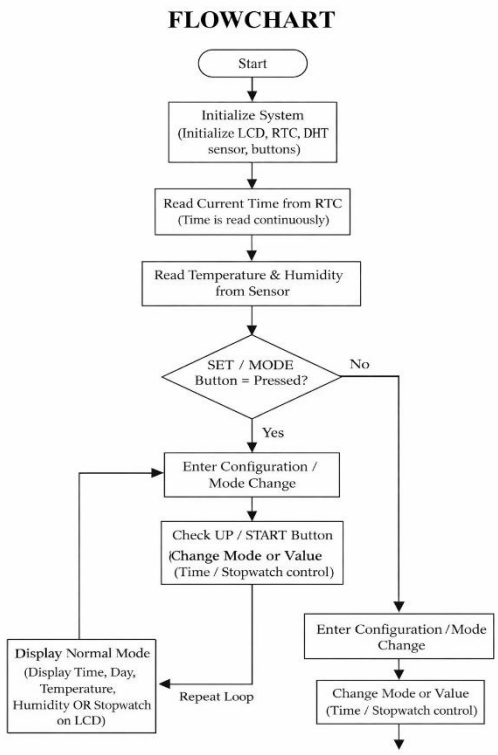

Figure: Flowchart of digital clock system operation

7. Applications

The digital clock system developed in this project has a wide range of practical and educational applications. It can be used as a digital wall clock or desk clock in homes, classrooms, laboratories, and offices, where accurate time display is required. The inclusion of temperature and humidity monitoring makes the system useful for observing indoor environmental conditions, which is especially beneficial in computer labs, libraries, and study rooms.

This system can also be applied in basic weather monitoring setups for indoor environments. By continuously displaying temperature and humidity values, it helps users maintain comfortable environmental conditions and can assist in deciding ventilation or cooling requirements. Due to its real-time clock functionality, the system is suitable for applications where precise timekeeping is essential, such as scheduling, attendance monitoring, and routine task management.

From an academic perspective, this project serves as an excellent learning tool for students studying embedded systems and microcontroller-based design. It provides hands-on experience with real-time clock interfacing, sensor integration, I2C communication, and user input handling

through push buttons. The stopwatch feature further enhances understanding of internal timers and real-time processing. Overall, the project can be extended and customized for advanced applications, making it a strong foundation for future embedded system developments.

9. Cost Estimation

The following table presents an estimated cost breakdown of the components used in the digital clock system. The prices are approximate and based on local market rates. This cost estimation demonstrates that the proposed system is economical and suitable for academic and student projects.

Component	**Quantity**	**Approximate Cost (PKR)**
Microcontroller Board	1	1800
RTC Module (DS1307)	1	450
I2C LCD (16×2)	1	900
DHT Sensor	1	500
Push Buttons	3	150
Total Estimated Cost		**≈ 3800 PKR**

10. Conclusion

The digital clock project was successfully designed and implemented using a microcontroller, RTC module, DHT sensor, and I2C LCD. The system provides accurate real-time clock functionality along with temperature and humidity monitoring and a stopwatch feature. This project enhances understanding of embedded system design, real-time data handling, and peripheral interfacing. Due to its reliability, simplicity, and low cost, the system is well suited for academic learning and practical embedded applications.

Code:

```
#include <Wire.h>
#include <LiquidCrystal_I2C.h>
#include <RTClib.h>
#include "DHT.h"

#define DHTPIN 27
#define DHTTYPE DHT11

#define BTN_MODE   14
#define BTN_START  12
#define BTN_RESET  13

LiquidCrystal_I2C lcd(0x27, 16, 2);
RTC_DS1307 rtc;
DHT dht(DHTPIN, DHTTYPE);

byte mode = 0;
bool stopwatchRunning = false;
unsigned long startMillis = 0;
unsigned long elapsedMillis = 0;
unsigned long lastBtnTime = 0;
const unsigned long debounceDelay = 200;

const char* daysOfWeek[] = {
  "SUN","MON","TUE","WED","THU","FRI","SAT"
};

void setup() {
  pinMode(BTN_MODE, INPUT_PULLUP);
  pinMode(BTN_START, INPUT_PULLUP);
  pinMode(BTN_RESET, INPUT_PULLUP);

  Wire.begin(21, 22);
  lcd.begin();
```

```
  lcd.backlight();
  dht.begin();

  if (!rtc.begin()) {
    lcd.print("RTC ERROR");
    while (1);
  }

  if (!rtc.isrunning()) {
    rtc.adjust(DateTime(F(__DATE__), F(__TIME__)));
  }

  lcd.clear();
}

void loop() {
  readButtons();
  if (mode == 0) {
    displayClockMode();
  } else {
    displayStopwatchMode();
  }
}

void readButtons() {
  if (millis() - lastBtnTime < debounceDelay) return;

  if (digitalRead(BTN_MODE) == LOW) {
    mode = !mode;
    lcd.clear();
    lastBtnTime = millis();
  }

  if (mode == 1 && digitalRead(BTN_START) == LOW) {
    stopwatchRunning = !stopwatchRunning;
    if (stopwatchRunning) {
```

```
      startMillis = millis() - elapsedMillis;
    }
    lastBtnTime = millis();
  }

  if (mode == 1 && digitalRead(BTN_RESET) == LOW) {
    stopwatchRunning = false;
    elapsedMillis = 0;
    lastBtnTime = millis();
  }
}

void displayClockMode() {
  DateTime now = rtc.now();
  float temp = dht.readTemperature();
  float hum = dht.readHumidity();

  int hour12 = now.hour() % 12;
  if (hour12 == 0) hour12 = 12;
  String ampm = now.hour() >= 12 ? "PM" : "AM";

  lcd.setCursor(0, 0);
  print2digit(hour12);
  lcd.print(":");
  print2digit(now.minute());
  lcd.print(":");
  print2digit(now.second());
  lcd.print(" ");
  lcd.print(ampm);
  lcd.print(" ");
  lcd.print(daysOfWeek[now.dayOfTheWeek()]);

  lcd.setCursor(0, 1);
  lcd.print("T:");
  lcd.print((int)temp);
  lcd.print("C ");
```

```
  lcd.print("H:");
  lcd.print((int)hum);
  lcd.print("%");
}

void displayStopwatchMode() {
  if (stopwatchRunning) {
    elapsedMillis = millis() - startMillis;
  }

  unsigned long ms = elapsedMillis % 1000;
  unsigned long seconds = elapsedMillis / 1000;
  byte hrs = seconds / 3600;
  byte mins = (seconds % 3600) / 60;
  byte secs = seconds % 60;

  lcd.setCursor(0, 0);
  lcd.print("STOPWATCH ");
  lcd.print(stopwatchRunning ? "RUN" : "STOP");

  lcd.setCursor(0, 1);
  print2digit(hrs);
  lcd.print(":");
  print2digit(mins);
  lcd.print(":");
  print2digit(secs);
  lcd.print(":");
  if (ms < 100) lcd.print("0");
  if (ms < 10) lcd.print("0");
  lcd.print(ms);
}

void print2digit(byte num) {
  if (num < 10) lcd.print("0");
  lcd.print(num);
```

Figure: Source code for digital clock system