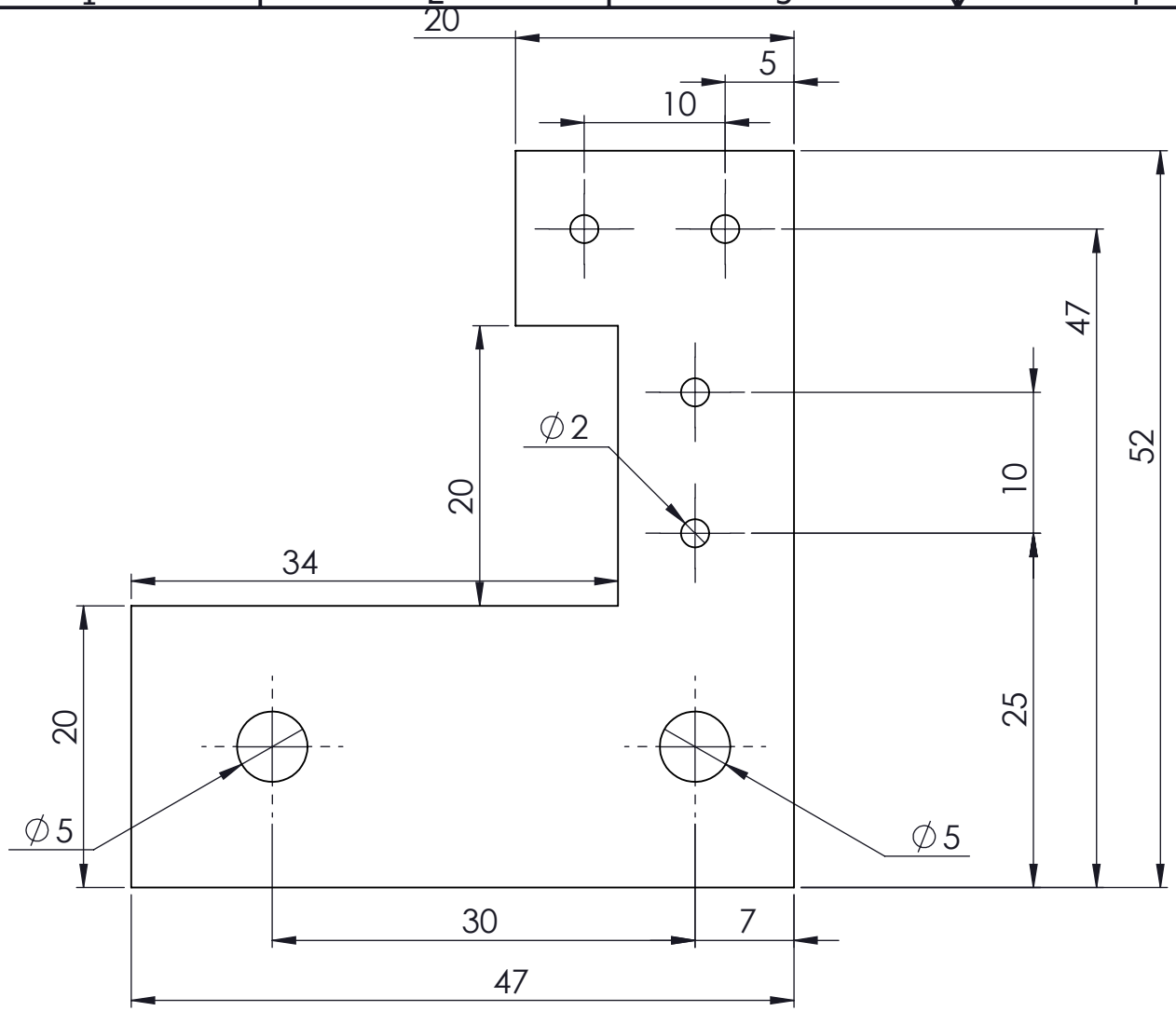


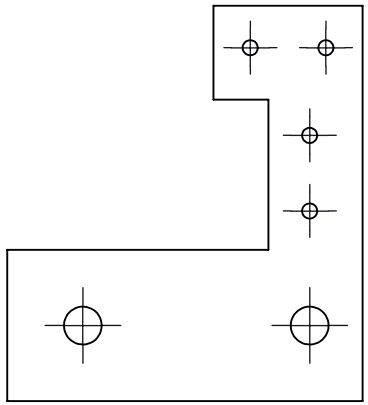

SINGAPORE INSTITUTE OF TECHNOLOGY

© COPYRIGHT OF ALL ARTICLES IN THIS DRAWING BELONG TO SINGAPORE INSTITUTE OF TECHNOLOGY AND NO REPRODUCTION IN THE WHOLE OR IN PART MAY BE MADE WITHOUT PRIOR WRITTEN PERMISSION

A4

UNLESS OTHERWISE SHOWN:
ALL SURFACES 6.3
ALL DIMENSIONS ±0.1mm
REMOVE ALL SHARP CORNERS

**A4 Landscape**

DESIGNED BY: Group 4 DATE: 111
CHECKED BY: Ariff DATE: 222
FILENAME: MotorSidePlate1
TITLE:
MATERIAL: Material <not specified> TREATMENT: NA
SCALE: 2:1 QUANTITY: NA
SHEET No. 1 of 1