Bottom View

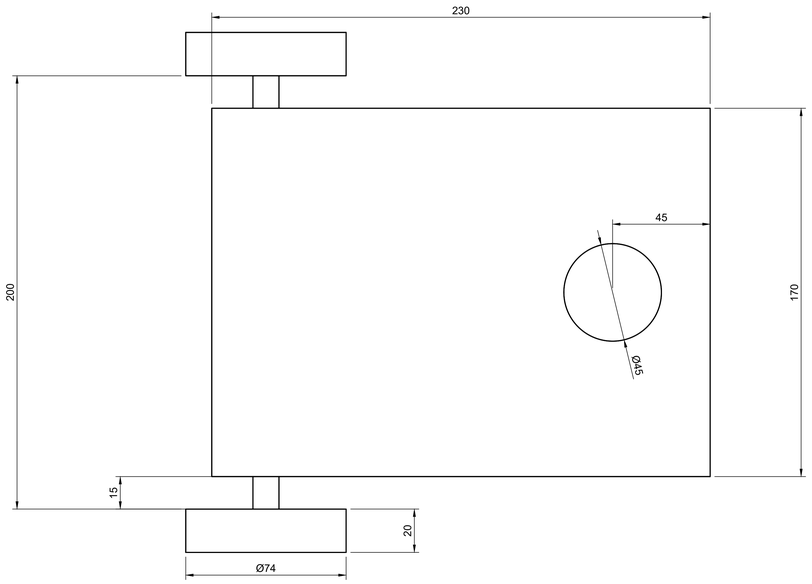

Left side View

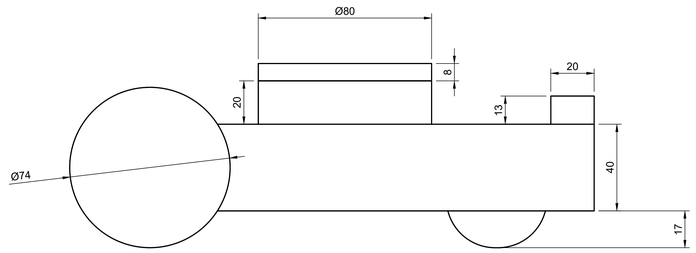

Top View

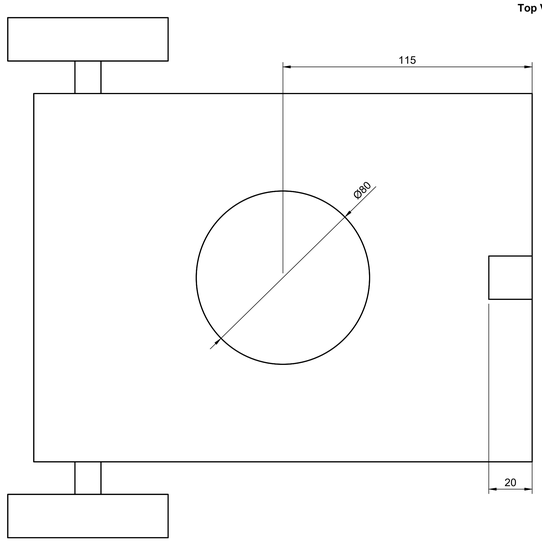

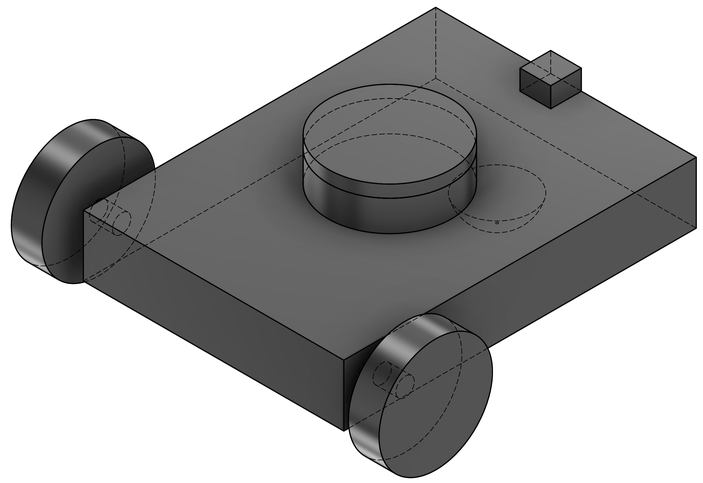

Dept.	Technical reference	Created by: Muheshkumar R 08-04-2026	Approved by
		Document type	Document status
		Title: 2wd	DWG No.
			Rev. / Date of issue / Sheet 1/1