Manualslib.com - Easy to Read Manuals

# Boeing 727 Maintenance Manual



## Contents

1. PARKING - MAINTENANCE PRACTICES
    1.1. General
    1.2. Equipment and Materials
    1.3. Park Airplane
    1.4. Prolonged Parking
2. MOORING
    2.1. General
    2.2. Equipment and Materials
    2.3. High Wind Conditions Mooring
    2.4. Procedure Recommended in Lieu of Mooring
3. Documents / Resources
    3.1. In Other Languages
    3.2. Other ManualsLib Projects

## PARKING - MAINTENANCE PRACTICES

### General

A. The airplane is normally parked for short periods with chocks in front of and behind at least one main gear wheel per gear, and parking brakes off. The parking brake is used to hold the airplane until chocks are in place. Openings in the airplane structure such as vents and scoops shall be covered or plugged to keep out weather and foreign matter. Should very high winds be expected (AMM 10—20—00, Mooring, High Wind Conditions).

B. A static ground on the airplane is not necessary when the airplane is parked or is serviced during the turnaround operation. This does not include when the

maintenance steps given below are done (AMM 20—70—01 ).

1. static ground on the airplane is not necessary when you pressure refuel the airplane. An electrical bond between the airplane and the refuel vehicle is recommended.
2. static ground of the airplane when you fuel over the wing is recommended.
3. Do a static ground of the airplane when you do maintenance procedures. Do this when you use devices such as Lights, power tools, and instruments powered from external cords that are attached to grounded electrical power sources.

C. Pilot probe covers and static port covers are recommended when the airplane is parked for more than a standard turnaround.

D. Failure to remove covers from pi tot probes or coverings from static ports before flight may cause Large errors in airspeed—sensing and altitude—sensing signals, which may lead to Loss of safe flight.

**CAUTION**

MAKE SURE THE PITOT PROBE COVER IS IN GOOD WORKING CONDITION WITH NO EVIDENCE OF DAMAGE, ESPECIALLY FRAYING AROUND THE COVER OPENING. FRAYED FIBERS FROM THE COVER COMBINED WITH OTHER SUBSTANCES SUCH AS DIRT, GREASE OR FLUIDS CAN CAUSE OBSTRUCTION IN THE PROBE.

E. A minimum distance of 15 feet should be maintained between airplanes being towed or parked to give adequate turning clearances (Fig. 201). If engine operation is anticipated, ensure airplanes, maintenance personnel and equipment, buildings, etc., adequate protection from jet blast and temperatures at idle and breakaway from standstill (Fig. 202). Various thrust settings wi l l be required for breakaway from standstill. These settings are governed by airplane position, type of area, surface condition etc. A high initial thrust setting is required to start airplane movement and then the setting is reduced to idle or slightly above to continue the maneuver.

**WARNING**

DO NOT CROSS ENGINE EXHAUST AREA DURING ENGINE RUNUP OR TAXIING. MAKE SURE AREAS IN FRONT OF ENGINES ARE CLEAR BEFORE ENGINE RUNUP.

F. If the airplane is parked for prolonged periods it must be moved at intervals of not more than 48 hours to prevent flat spots forming on tires. If the airplane cannot be moved, relieve the tire Loading by jacking the airplane. If parking area is covered by ice or packed snow, to prevent tires from becoming frozen to the ground, place a mat or suitable material under and around the tires. If the tires are frozen to the ground they can be freed by the application of heat from a heater cart or by the application of

salt. A heater cart can also be used to free frozen brakes. Wheel covers should be used in severe weather conditions.

G. The prolonged parking procedure is not applicable to an aircraft that is out of service for maintenance or modification reasons only.

H. In cold weather, it is necessary to drain fuel tank sumps prior to fueling to remove water from fuel tanks if the airplane has been idle for more than 45 minutes prior to fueling. Drain fuel tank sumps again after refueling if the airplane has been idle for 2 hours or more after refueling. In cold weather, water can freeze and not Let the drain valves open.

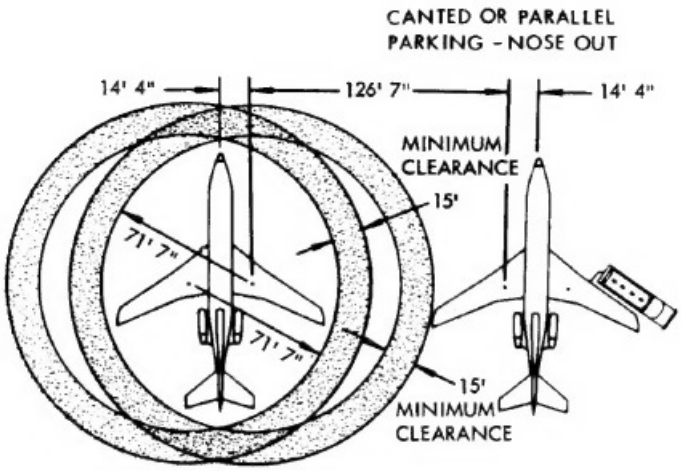


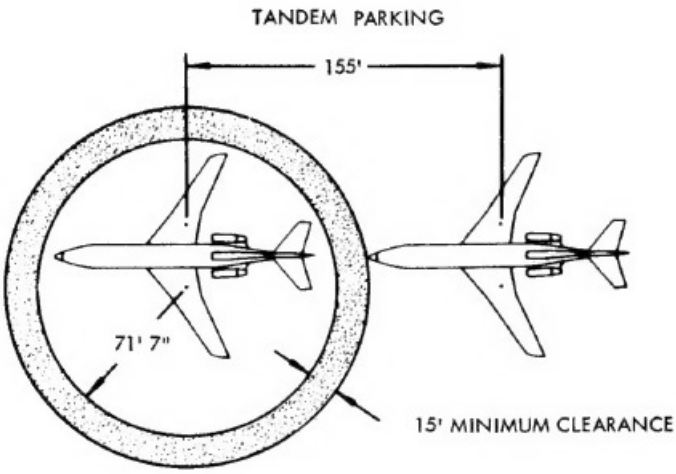


NOTE: ALL RADIUS DIMENSIONS SHOWN ARE FOR A THEORETICAL TURN OF 78°

FOR ENGINE EXHAUST AND DANGER AREAS, REFER TO FIGURE 202

CANTED OR PARALLEL
PARKING - NOSE OUT

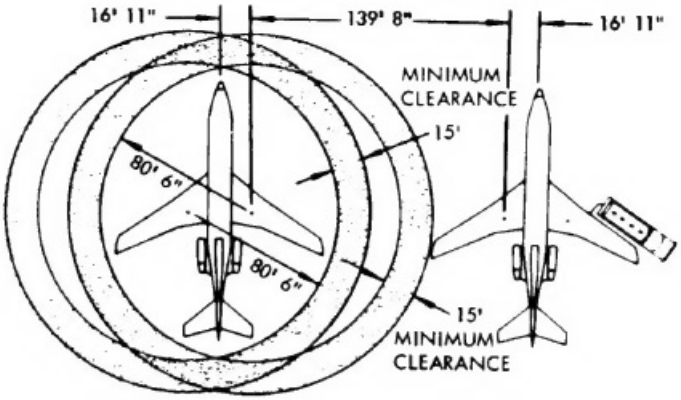


TANDEM PARKING

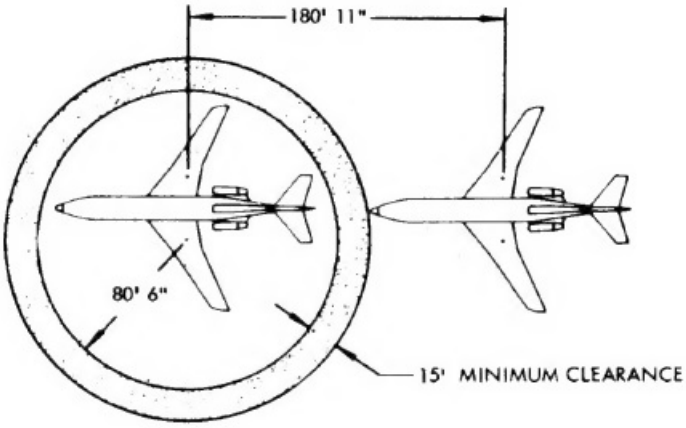


NOTE: ALL RADIUS DIMENSIONS SHOWN ARE FOR A THEORETICAL TURN OF 78°

FOR ENGINE EXHAUST AND DANGER AREAS, REFER TO FIGURE 202

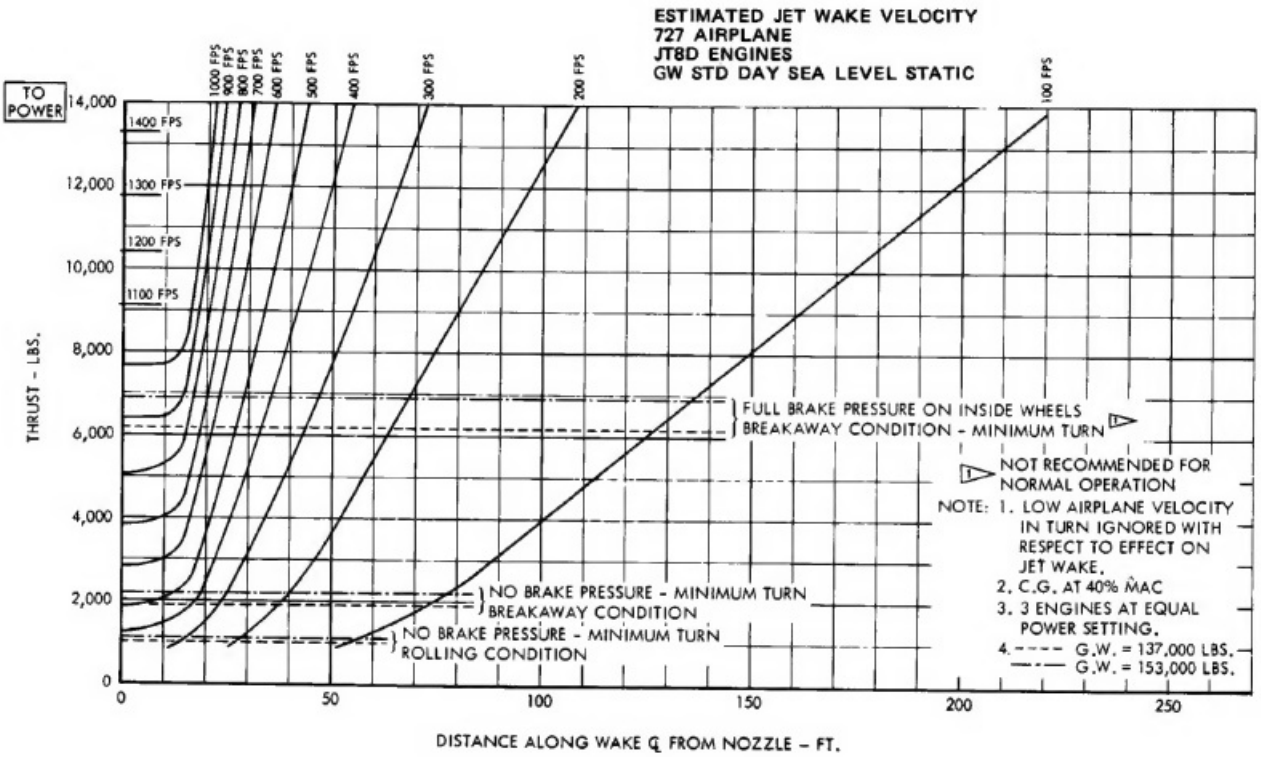


Jet Wake Data for Parking
Figure 202 (Sheet 1)

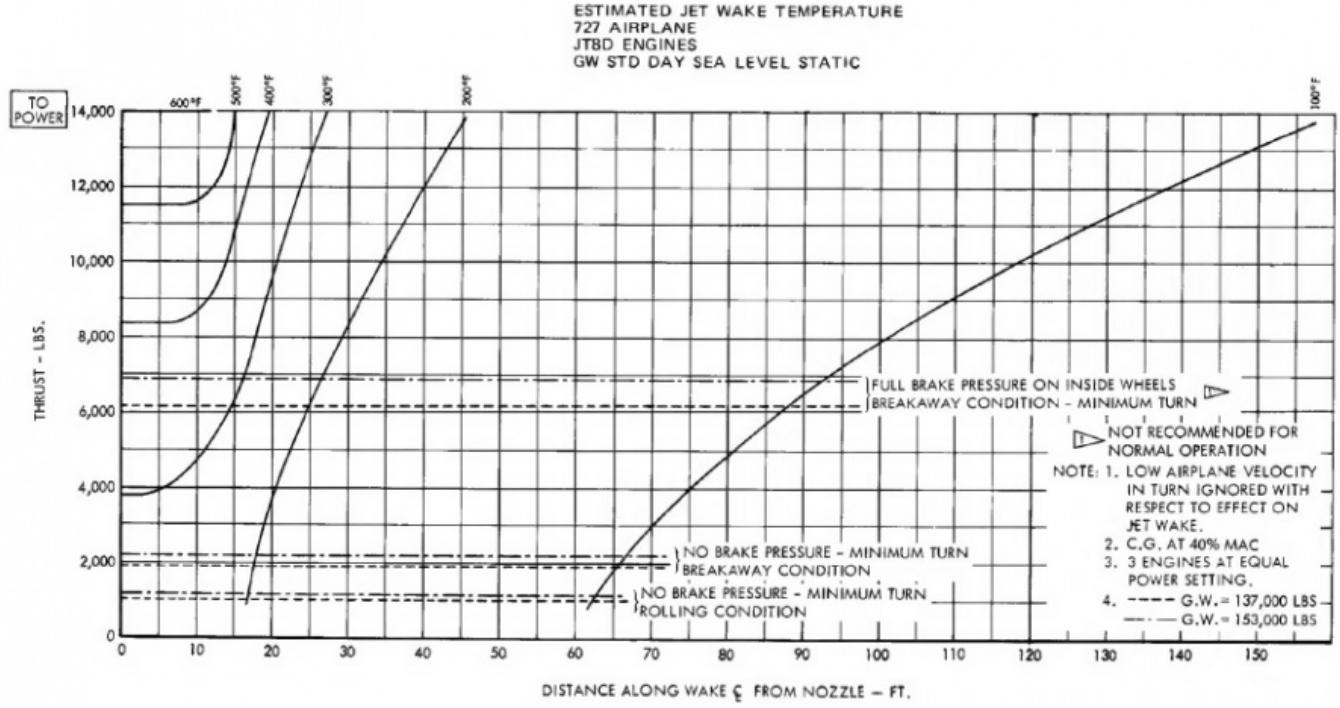


Jet Wake Data for Parking
Figure 202 (Sheet 2)

## Equipment and Materials

A. Main Gear Ground Lockpin (AMM 32—00—11)

B. Nose Gear Ground Lockpin (AMM 32—00—11)

C. Plug Assembly — Electrical Rack Cooling Exhaust F 70120

D. Plug — Air Conditioning Ram Air Inlet F 72740

E. B00316 Solvent — Aliphatic Naphtha, TT—N—95, Type I

F. G02443 Orange barricade tape — 3 inches wide, 4 mi ls thick, non—adhesive, with REMOVE BEFORE FLIGHT printed on it in black letters

G. G02219 - 3M Scotch Brand No. 471 vinyl adhesive tape (1.5 inches wide) bright yellow color

H. G02444 - Red paper tag (3 inches wide, 6 inches Long) with attaching wire that has STATIC PORTS COVERED printed on it in black Letters - P/N 2000S

I. G02447 Red paper tag (3 inches long, 6 inches wide) with attaching wire that has PI TOT PROBES COVERED printed on it in black letters - P/N 1000P

J. Plug — Engine Exhaust, JT8D F80093 (Preferred), F 72749 (Alternate)

K. Plug — Center Engine Inlet, JT8D F 72842

L. Plug — Side Engine Inlet, JT8D F 72717

M. Cover Assembly — APU Exhaust F 72866—1 (for airplanes without exhaust gas outlet door)

N. Cover - Pitot Tube, KPC3-640-35

O. Mat or suitable material for placing between tires and parking area i f airplane is to be parked on ice or packed snow.

P. Wheel Chocks

Q. Support Assembly — Stabi lizing Jacks F 72843—1

## Park Airplane

A. Pitot probe covers and static port covers are recommended when the airplane is parked for more than a standard turnaround.

**⚠ WARNING ⚠**

PITOT PROBE COVERS AND STATIC PORT COVERS ARE RECOMMENDED WHEN THE AIRPLANE IS PARKED FOR MORE THAN A STANDARD TURNAROUND OR WHEN CONDITIONS SUCH AS INSECT ACTIVITY, DUST STORMS OR VOLCANIC ASH MAY INCREASE THE THE RISK OF PITOT PROBE OR STATIC PORT CONTAMINATION. A PITOT PROBE OR STATIC PORT SYSTEM BLOCKED BY FOREIGN OBJECTS SUCH AS INSECTS MAY CAUSE LARGE ERRORS IN AIRSPEED-SENSING AND ALTITUDE-SENSING SIGNALS, WHICH MAY LEAD TO LOSS OF SAFE FLIGHT.

B. Taxi or tow airplane into position designated for parking. If airplane is towed into

position, instal l nose gear downlock assembly before towing (AMM 32-00-11 ). Terminate maneuver with airplane headed into prevai ling wind.

NOTE: Installation of nose gear Lockpin is optional when airplane is being towed with gear hydraulic system pressurized.

C. Install nose gear downlock assembly when airplane stops after taxiing. If airplane is to be jacked, install main gear downlock assemblies

D. If very high winds are expected (AMM 10—20—00, High Wind Conditions Mooring), install stabilizing jack support assembly.

E. Ground airplane.

F. If parking area is covered by ice or packed snow, prevent tires from becoming frozen to ground, by placing a mat or suitable material under and around tires.

**CAUTION**

A SNOW LOAD ON HORIZONTAL STABILIZER CAN SHIFT CENTER OF GRAVITY AFT AND TIP AIRPLANE. MAKE SURE THAT ALL SNOW IS REMOVED PERIODICALLY TO PREVENT A CRITICAL CG SHIFT (AMM CHAPTER COLD WEATHER MAINTENANCE).

G. Turn on battery switch, then set parking brake by depressing pedals (toe of rudder pedals) and pulling up on parking brake handle Located on captain's control stand. Relieve pressure on brake pedals before Letting go of parking brake handle.

H. Place wheel chocks about 3 inches in front of and behind both sets of main gear wheels.

**CAUTION**

WHEN THE CENTER OF GRAVITY CANNOT BE READILY CORRECTED BY ADDING BALLAST OR FUEL, EXTEND AND LOCK THE AFT AIRSTAIRS TO TEMPORARILY SUPPORT THE TAIL UNTIL CG POSITION CAN BE CORRECTED. IF A TAIL TIPPING SITUATION DEVELOPS WITH THE AFT AIRSTAIRS DOWN AND LOCKED, THE NOSE WHEELS MAY LEAVE THE GROUND BEFORE THE AFT AIRSTAIR STRUTS BOTTOM TO FORM A TAIL SUPPORT.

I. To release parking brakes, the captain's or first officer 's brake pedals need only to be fully applied and then released. A light on the control stand next to the parking brake lever, is provided to indicate when the parking brake is on.

**CAUTION**

DO NOT LEAVE PARKING BRAKES ON ANY LONGER THAN NECESSARY WHEN BRAKES ARE HOT FOLLOWING A HIGH ENERGY STOP OR STOP OTHER THAN NORMAL. UNDER STATIC PRESSURE, HOT BRAKE SURFACES TEND TO FUSE TOGETHER.

J. Turn off battery switch if no longer required.

K. Set stabilizer, aileron and rubber trim control to "O".

L. Raise flaps to the fully up position. This Locks the outboard ailerons.

**CAUTION**

DO NOT RESTRAIN THE CONTROL COLUMN OR RUDDER PEDALS. DOING SO COULD RESULT IN CONTROL SYSTEM DAMAGE.

M. Close all fuselage openings and al l interior doors when airplane is parked to prevent the spreading of any possible fire.

NOTE: Closing off all sources of ventilation Limits oxygen available for combustion and thus reduces the amount of damage caused by fire.

N. In cold weather, it is necessary to drain fuel tank sumps prior to fueling to remove water from fuel tanks if the airplane has been idle for more than 45 minutes prior to fueling. Drain fuel tank sumps again after refueling if the airplane has been idle for 2 hours or more after refueling. In cold weather, water can freeze and not let the drain valves open.

O. Install plugs and covers as required.

1. Install the protective covers and plugs to the engines.

**WARNING**

WHEN PITOT PROBES ARE COVERED, MAKE SURE THAT CONDITION IS VISIBLE FROM THE GROUND. IN ADDITION, ATTACH A TAG TO THE LEFT CONTROL WHEEL IN THE FLIGHT DECK AS A REMINDER THAT PITOT PROBES ARE COVERED. FAILURE TO OBSERVE AND REMOVE COVERINGS PITOT PROBES BEFORE FLIGHT CAUSE LARGE ERRORS IN AIRSPEED-SENSING AND ALTITUDE-SENSING SIGNALS, WHICH LEAD TO LOSS 0" SAFE FLIGHT.

**CAUTION**

WHENEVER AN OPENING IS COVERED, MAKE SURE THAT CONDITION IS VISIBLE FROM GROUND. ENGINES SHOULD NOT BE OPERATED WITH COVERS IN PLACE BECAUSE THE COVERS CAN COME OFF AND DAMAGE THE ENGINES.

2. Put the covers on the pi tot probes (Fig. 203 for locations of the pi tot probes).

**CAUTION**

MAKE SURE PITOT PROBE COVER IS IN GOOD WORKING CONDITION WITH NO EVIDENCE OF DAMAGE, ESPECIALLY FRAYING AROUND THE COVER OPENING, FRAYED FIBERS FROM COVER COMBINED WITH OTHER SUBSTANCES SUCH AS DIRT, GREASE OR FLUIDS CAN CAUSE OBSTRUCTION IN THE PROBE.

3. Attach a red paper tag that has PiTOT PROBES COVERED printed on it in black letters, to the top of the left control wheel in the flight deck.

**WARNING**

WHEN STATIC PORTS ARE COVERED, MAKE SURE THAT CONDITION IS VISIBLE FROM THE GROUND. IN ADDITION, ATTACH A TAG TO THE LEFT CONTROL WHEEL IN THE FLIGHT DECK AS A REMINDER THAT STATIC PORTS ARE COVERED. FAILURE TO OBSERVE AND REMOVE COVERINGS OVER STATIC PORTS BEFORE FLIGHT MAY CAUSE LARGE ERRORS IN AIRSPEED-SENSING AND ALTITUDE-SENSING SIGNALS, WHICH LEAD TO LOSS OF SAFE FLIGHT

**CAUTION**

WHENEVER AN OPENING rs COVERED, MAKE SURE THAT CONDITION is VISIBLE FROM THE GROUND. ENGINES SHOULD NOT BE OPERATED WITH COVERS IN PLACE BECAUSE THE COVERS CAN COME OFF AND DAMAGE THE ENGINES.

4. Use 3M No. 471 yellow vinyl adhesive tape and orange barricade tape that has RLMCVZ BEFORE FLIGHT printed on it in black letters to cover the static ports in the following manner (Fig. 203 for the locations of the static ports).

5. Use the following static port cover procedure for the cabin pressure static ports (Fig. 204 for illustrations of the static port cover placement procedure)

**WARNING**

DO NOT PLACE 3M NO. 471 YELLOW VINYL ADHESIVE TAPE OVER THE HOLES OF THE STATIC PORTS.

a. Clean the area around each static port with aliphatic naphtha or equivalent, and a clean dry rag where you wi ll put the 3M No. 471 yellow vinyl adhesive tape (Fig. 204).

b. Place one end of an approximately 4—foot long piece of the orange barricade tape over the holes of the static port and secure the upper edge with a 5—inch piece of 3M No. 471 yellow vinyl adhesive tape (Fig. 204).

   NOTE: Smooth the 3M No. 471 yellow vinyl adhesive tape on the airplane surface to make sure the bond is satisfactory.

   1. Do not put vinyl adhesive tape over the holes of the static ports.

c. Put a 5—inch piece of 3M No. 471 vinyl adhesive tape on each vertical edge of the barricade tape overlapping the first strip of adhesive tape (Fig. 204).

d. Put an 8—inch piece of 3M No. 471 vinyl adhesive tape horizontally over the barricade tape below the static port holes, overlapping the two vertical strips of adhesive tape (Fig. 204).

e. Carefully grasp the free section of the barricade tape and fold it back up against the surface of the airplane. Place an 8—inch strip of the No. 471 vinyl adhesive tape horizontally over the back side of the barricade tape

overlapping the lower half of the first 8—inch strip of No. 471 vinyl adhesive tape (Fig. 204).

f. Allowing the barricade tape to stream down, place an 8—inch strip of 3M No. 471 yellow vinyl adhesive tape horizontally over the barricade tape half way down the length of the barricade tape (Fig. 204).

g. Place an 8—inch strip of 3M No. 471 yellow vinyl adhesive tape horizontally over the lower end of the barricade tape (Fig. 204).

6. For the in—line static ports use the following static port cover procedure (Fig. 205 for illustrations of the static port cover placement procedure for the primary static ports).

**WARNING**

DO NOT PLACE 3M NO. 471 YELLOW VINYL ADHESIVE TAPE OVER THE HOLES OF THE STATIC PORTS.

a. Clean the area around each primary static port with aliphatic naphtha or equivalent, and a clean dry rag where you wi ll put the 3M No. 471 yellow vinyl adhesive tape (Fig. 205).

b. Place one end of an approximately 4—foot long piece of the orange barricade tape over the holes of the upper primary static port and secure the upper edge with a 5—inch piece of 3M No. 471 yellow vinyl adhesive tape (Fig. 205).

NOTE: Smooth the 3M No. 471 yellow vinyl adhesive tape on the airplane surface to make sure the bond is satisfactory.

1. Do not put vinyl adhesive tape over the holes of the static ports.

c. Put a 12—inch strip of 3M No. 471 yellow vinyl adhesive tape on each vertical edge of the barricade tape overlapping the first strip of adhesive tape (Fig. 205).

d. Put an 8—inch strip of 3M No. 471 vinyl adhesive tape horizontally over the barricade tape below the static port holes, overlapping the two vertical strips of adhesive tape (Fig. 205).

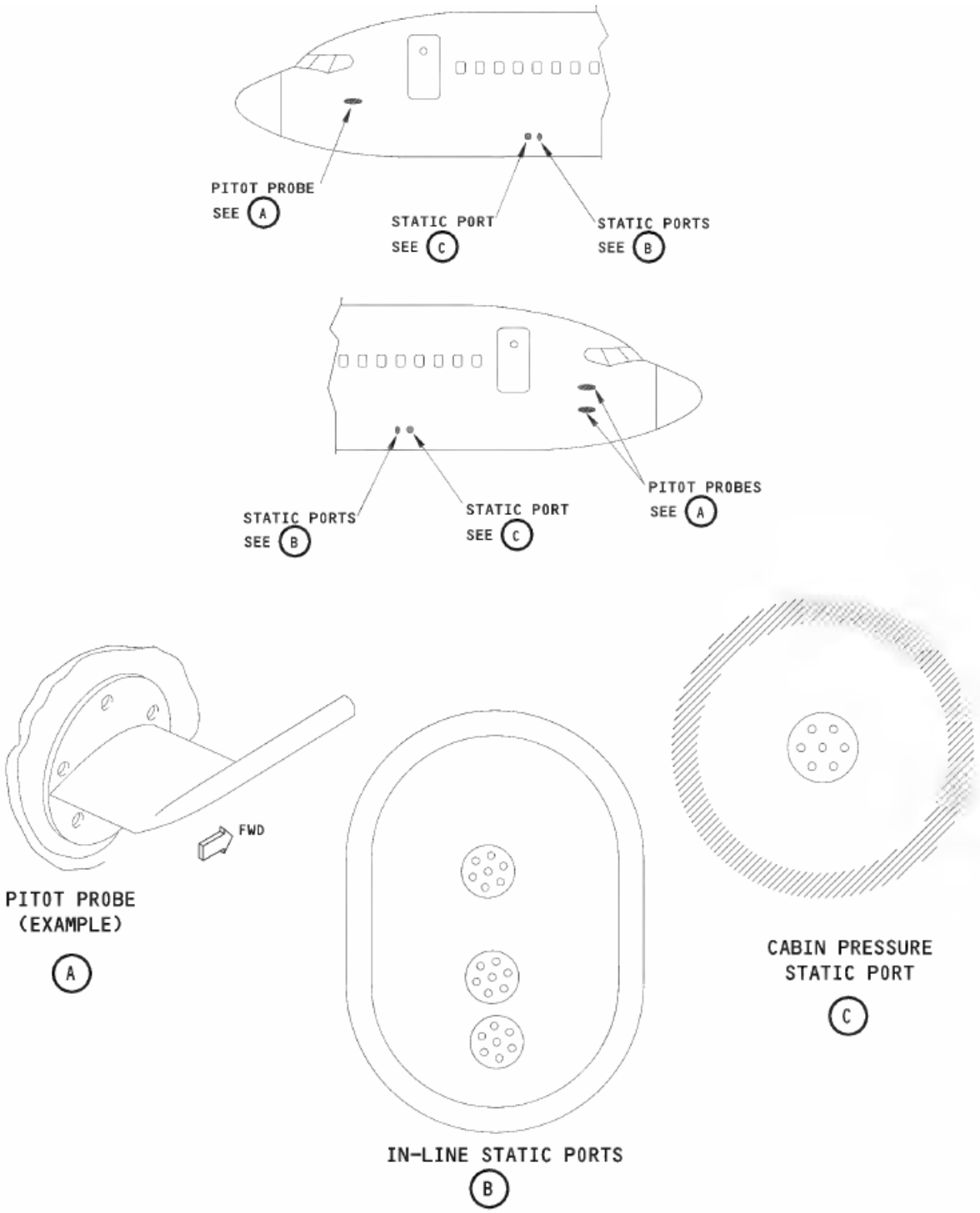


Pilot-Static System - Component Location
Figure 203

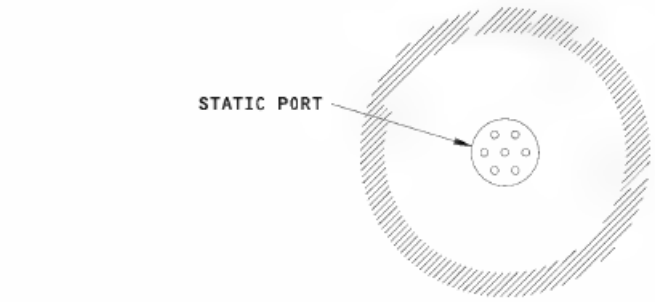


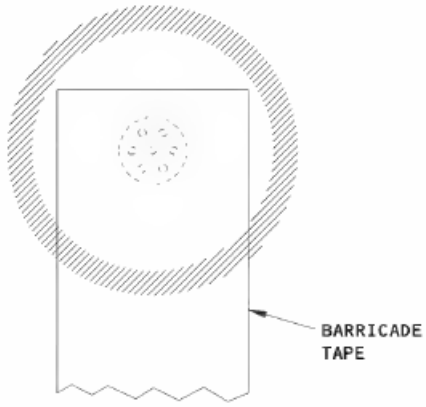


STEP 1

PUT ONE END OF THE BARRICADE TAPE OVER THE STATIC PORT TO COVER THE HOLES

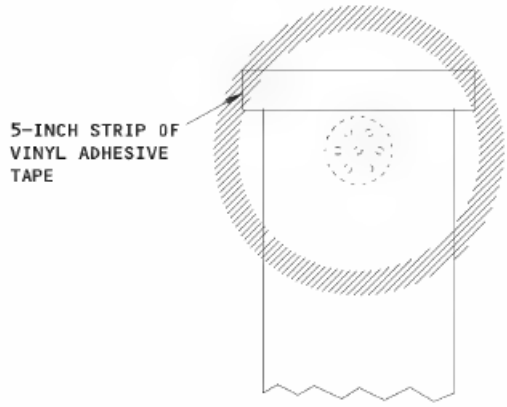


STEP 2

SECURE THE TOP EDGE OF THE BARRICADE TAPE WITH 5 INCHES OF VINYL ADHESIVE TAPE

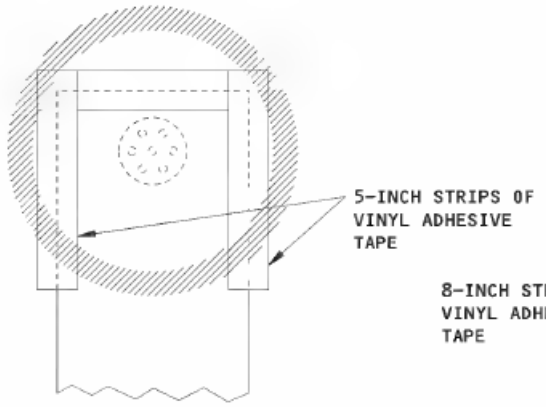


STEP 3

PUT TWO 5-INCH STRIPS OF VINYL ADHESIVE TAPE OVER THE SIDES OF THE BARRICADE TAPE, OVERLAPPING THE TOP STRIP OF ADHESIVE TAPE

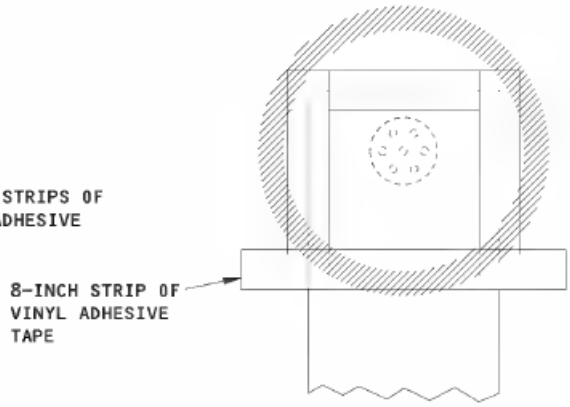


STEP 4

PUT AN 8-INCH HORIZONTAL STRIP OF VINYL ADHESIVE TAPE OVER THE BARRICADE TAPE BELOW THE STATIC PORT HOLES OVERLAPPING THE TWO VERTICAL STRIPS

Cabin Pressure Static Port Cover Procedure
Figure 204 (Sheet 1)

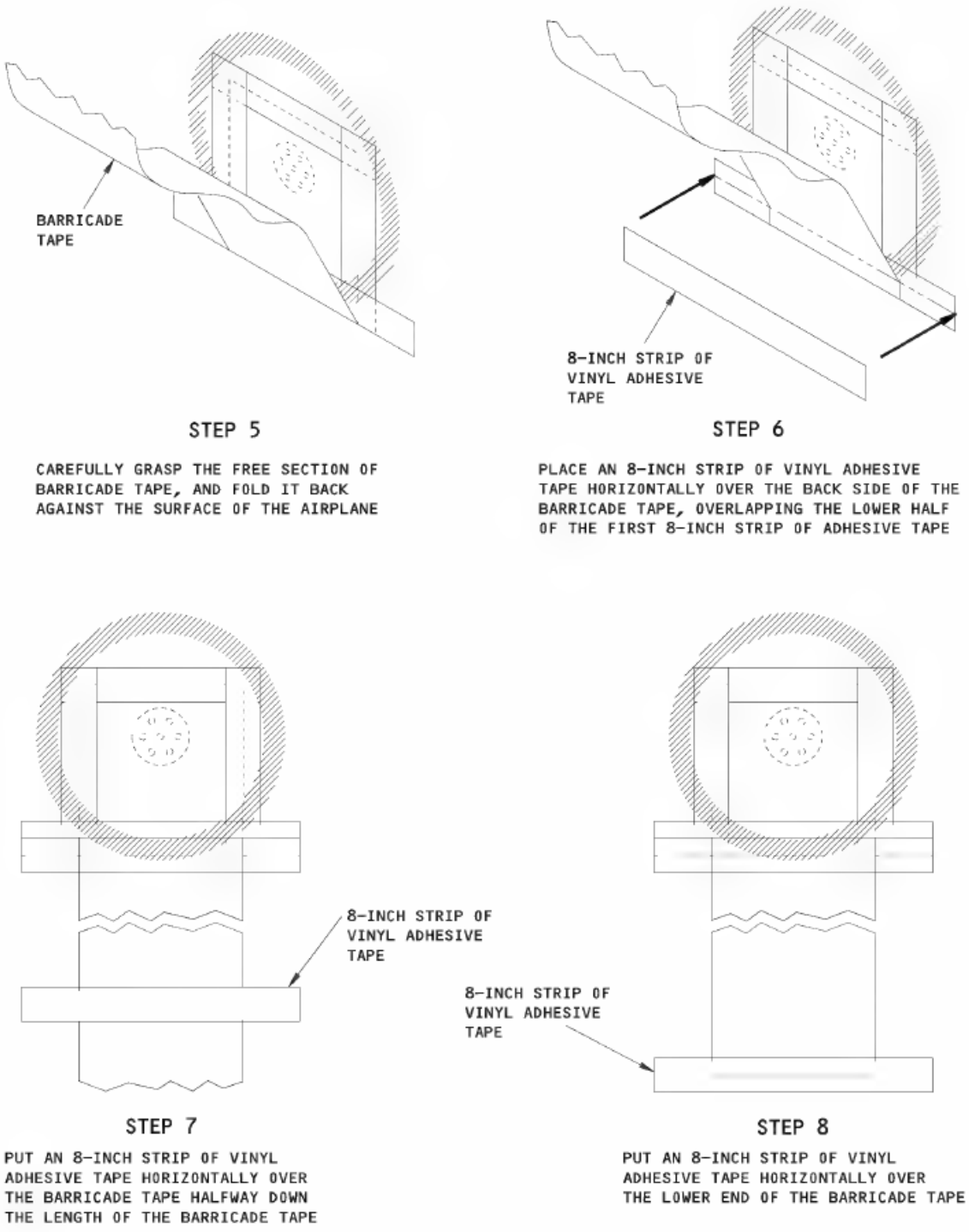


Cabin Pressure Static Port Cover Procedure
Figure 204 (Sheet 2)

e. Carefully grasp the free section of the barricade tape and fold it back up against the surface of the airplane. Place ar 8—inch strip of 3M No. 471 vinyl adhesive tape horizontally over the back side of the barricade tape overlapping the lower half of the first strip of 8—inch 3M No. 471 vinyl adhesive tape (Fig. 205).

f. Allowing the barricade tape to stream down, place an 8—inch strip of 3M No. 471 yellow vinyl adhesive tape horizontally over the barricade tape half way down the length of the barricade tape (Fig. 205).

g. Place an 8—inch strip of the 3M No. 471 yellow vinyl adhesive tape

horizontally over the lower end of the barricade tape (Fig. 205).

7. Attach a red paper tag that has STATIC PORTS COVERED printed on it in black letters, to the left control wheel in the flight deck with wire.

   **CAUTION**

   IF YOU CAN DRAIN FUEL FROM DRAIN VALVE AFTER YOU APPLIED HOT AIR TO THE EXTERIOR FOR 3 TO 5 MINUTES, DO NOT THINK THAT ALL IS MELTED. ADJACENT TO THE DRAIN VALVE UNIT CAN MELT AND LET SOME WATER AND FUEL FLOW FROM DRAIN. BUT PIECE OF ICE CAN STAY BEHIND. IF FUEL NOT FLOW FRCM THE DRAIN, CONTINUE TO APPLY HOT AIR FOR A SHORT TIME, AND FREQUENTLY DC A CHECK OF THE FLOW "ROM THE DRAIN. CATCH FUEL IN A CONTAINER AND MAKE SURE ALL WATER IS REMOVED.
   HEAT APPLIED TO THE SUMP DRAIN VALVES OUTBOARD MAIN AND RESERVE TANKS WILL NOT REMOVE THE WHICH HAS COLLECTED IN TANK SUMP OR IN THE DRAIN LINE BETWEEN THE TANK SUMP AND VALVE. TO REMOVE THIS ICE, YOU MUST PUT THE AIRPLANE IN A WARM HANGAR FOP SUFFICIENT TO MELT THE ICE. THEN DRAIN SUMPS UNTIL WATER IS REMOVED.

P. In very cold weather, drain fuel tank sumps prior to refueling to remove water from fuel tanks if the airplane hac been idle for more than 45 minutes prior to refueling. Drain fuel tank sumps again after refueling if the airplane has been idle for 2 hours or more after refueling, prior to departure.

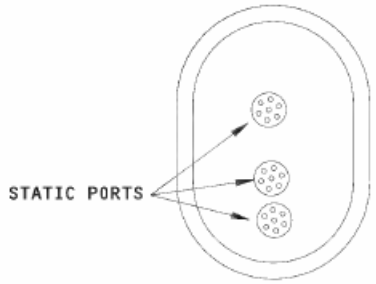


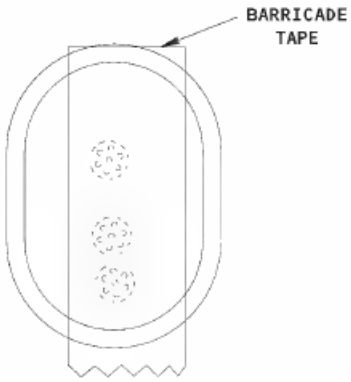


STEP 1

PUT ONE END OF THE BARRICADE TAPE OVER THE STATIC PORTS TO COVER ALL 3 IN-LINE STATIC PORTS.

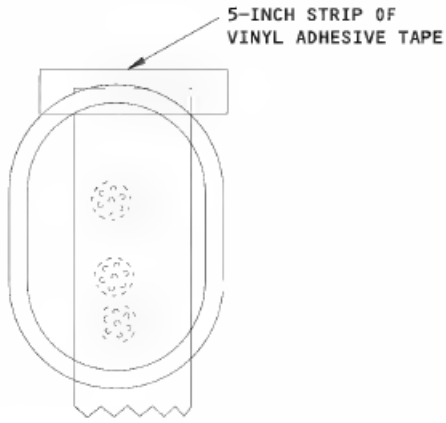


STEP 2

SECURE THE TOP EDGE OF THE BARRICADE TAPE WITH 5-INCH STRIP OF VINYL ADHESIVE TAPE.

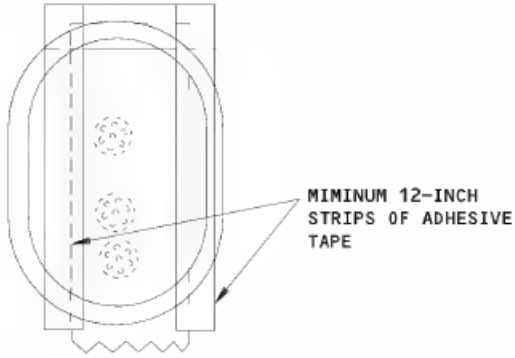


STEP 3

PUT TWO STRIPS OF VINYL ADHESIVE TAPE, EACH A MINIMUM OF 12 INCHES IN LENGTH, OVER THE SIDES OF THE BARRICADE TAPE OVERLAPPING THE TOP STRIP OF ADHESIVE TAPE.

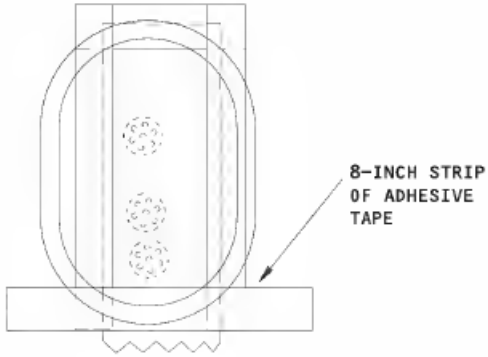


STEP 4

PUT AN 8-INCH STRIP OF VINYL ADHESIVE TAPE OVER THE BARRICADE TAPE BELOW THE STATIC PORT HOLES OVERLAPPING THE TWO VERTICAL STRIPS.

In-Line Static Ports Cover Procedure
Figure 205 (Sheet 1)

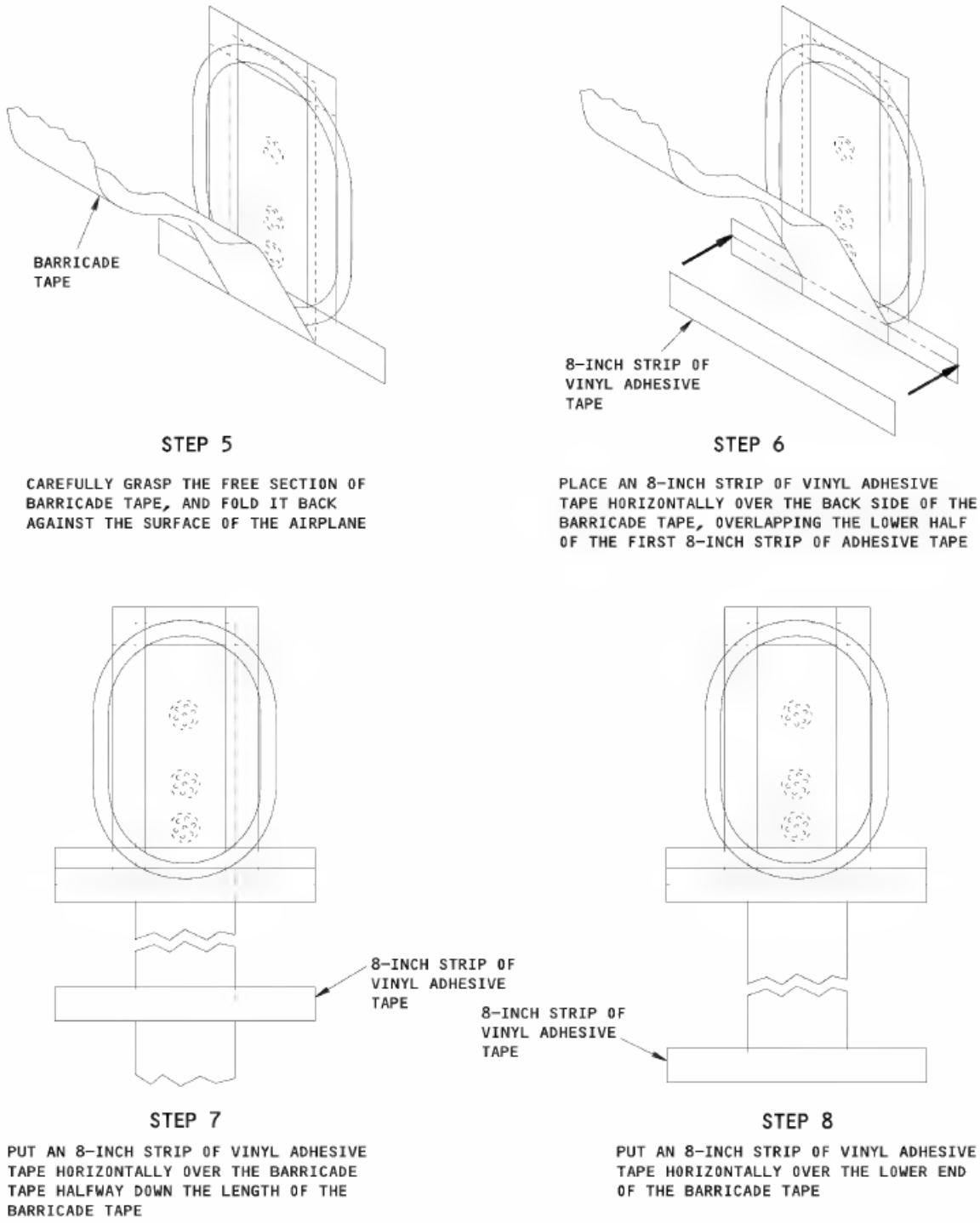


In-Line Static Ports Cover Procedure
Figure 205 (Sheet 2)

1. Put the Airplane Back In Its Usual Condition for Return to Service

**WARNING**

FAILURE TO REMOVE COVERS FROM PITOT PROBES BEFORE FLIGHT MAY CAUSE LARGE ERRORS IN AIRSPEED-SENDING AND ALTITUDE-SENSING SIGNALS, WHICH MAY LEAD TO LOSS OF SAFE FLIGHT.

**CAUTION**

REMOVE ALL COVERS. ENGINES SHOULD NOT BE OPERATED WITH COVERS IN PLACE BECAUSE THE COVERS CAN COME OFF AND DAMAGE THE ENGINES.

1. Remove the covers from the fol lowing components:

   a. Pitot probes

      **CAUTION**

      MAKE SURE THE PITOT PROBE COVER IS IN GOOD WORKING CONDITION WITH NO EVIDENCE OF DAMAGE, ESPECIALLY FRAYING AROUND THE COVER OPENING. FRAYED FIBERS FROM THE COVER COMBINED WITH OTHER SUBSTANCES SUCH AS DIRT, GREASE OR FLUIDS CAN CAUSE OBSTRUCTION IN THE PROBE.

   b. Engine inlet and turbine exhaust

2. Remove the PI TOT PROBES COVERED tag from the left control in the flight deck.

   **WARNING**

   FAILURE TO REMOVE BARRICADE TAPE AND VINYL ADHESIVE TAPE FROM STATIC PORTS BEFORE FLIGHT MAY CAUSE LARGE ERRORS IN AIRSPEED-SENSING AND ALTITUDE-SENSING SIGNALS, WHICH MAY LEAD TO LOSS OF SAFE FLIGHT.

   **CAUTION**

   REMOVE ALL BARRICADE TAPE AND VINYL ADHESIVE TAPE. ENGINES SHOULD NOT BE OPERATED WITH COVERINGS IN PLACE BECAUSE THE COVERINGS CAN COME OFF AND DAMAGE THE ENGINES.

3. Remove all barricade tape and vinyl adhesive tape from the static ports.

   a. Inspect each static port and if necessary use naphtha or equivalent to remove all tape residue, dirt and other contaminants around the port.

4. Remove the STATIC PORTS COVERED tag from the left control wheel in the flight deck.

## Prolonged Parking

A. If the airplane is parked for prolonged periods, make sure at! protective coverings for al l areas of the airplane are still installed correctly every 7 day cycles.

B. If the airplane is parked for prolonged periods, wheel bearing corrosion can be prevented by occasionally rotating the wheels three or four revolutions with the gear jacked cr by towing the airplane. To prevent flat spots on tires when airplane is parked, tires must be rotated to a new position at intervals varying from 8 hours in cold weather to 30 days in warm weather. If it is impractical to move the airplane, relieve tire loading by jacking the airplane.

   **WARNING**

WHEN THE STATIC PORTS/PITOT PROBES COVERED, MAKE SURE THAT CONDITION VISIBLE FROM THC GROUND. IN ADDITION, ATTACH TAGS TO THE LEFT CONTROL WHEEL IN THE FLIGHT DECK AS REMINDERS THAT STATIC PORTS/PITOT PROBES COVERED. FAILURE TO OBSERVE AND REMOVE COVERINGS OVER STATIC PORTS/PITOT PROBES BEFORE FLIGHT MAY CAUSE LARGE ERRORS IN AIRSPEED-SENSING AND ALTITUDE-SENSING SIGNALS, WHICH MAY LEAD TO LOSS OF SAFE FLIGHT.

**⚠ CAUTION ⚠**

MAKE SURE THE PITOT PROBE COVER IS IN GOOD WORKING CONDITION WITH NO EVIDENCE OF DAMAGE, ESPECIALLY FRAYING AROUND THE COVER OPENING. FRAYED FIBERS FROM COVER COMBINED WITH OTHER SUBSTANCES SUCH AS DIRT, GREASE OR FLUIDS CAN CAUSE OBSTRUCTION IN THE PROBE.

1. The procedure for attaching static port covers to the airplane and the locations of the static ports and pi tot probes are given in Normal Parking.

C. Tires (particularly those with synthetic cords) take on a cold set when permitted to stand in one position for a period of time. Although the flat spots do not damage the tire structurally, they may cause vibration on the airplane during the early part of a taxi roll. Flat spots on nose gear tires may cause the nose gear to shimmy. Tires can be reshaped by over inflating the tires 25 to 50% (but not to exceed 225 psi ) for about 30 minutes, then towing the airplane for a short distance.

**⚠ CAUTION ⚠**

DECREASE PRESSURE TO NORMAL AFTER THE TIRE ASSUMES ITS NORMAL SHAPE.

D. The finish on the flap transmission assembly jackscrews wi lt not provide adequate corrosion protection unless a film of oil covers the surface of the jackscrew. If an airplane is allowed to stand in a moist atmosphere for an extended period of time, the oil on the surface of the jackscrews will evaporate and corrosion will result. This is particularly true if the flaps are left extended with the jackscrews exposed to the washing action of the rain. Since corrosion wi ll not be a problem if the jackscrews are kept oi led, the following preventative maintenance action is to be followed.

1. Regularly inspect reservoir on side of ball bearing nut and keep reservoir fi l led with MIL-L-7870 oil.

2. Retract flaps whenever airplane is to be left standing in the weather for extended periods.

3. Extend and retract inboard and outboard flaps a minimum of once every two days. This action wi ll automatically lubricate the jackscrews if there is oi l in the jackscrew reservoirs.

E. A snow load on the horizontal stabilizer can shift the center of gravity aft and tip the

airplane. Make sure that al l snow is removed periodically to prevent a critical CG shift (AMM Chapter Cold Weather Maintenance).

F. When restoring an airplane to service after prolonged parking in ice and snow, do not retract the aft airstairs until all ice and snow is removed. Keep away from the nose gear and do not park equipment near the airplane while removing ice.

**WARNING**

FAILURE TO REMOVE COVERS FROM PITOT PROBES BEFORE FLIGHT MAY CAUSE LARGE ERRORS IN AIRSPEED-SENSING AND ALTITUDE-SENSING SIGNALS WHICH MAY LEAD TO LOSS OF SAFE FLIGHT.

**CAUTION**

REMOVE ALL COVERS. ENGINES SHOULD NOT BE OPERATED WITH COVERS IN PLACE BECAUSE THE COVERS CAN COME OFF AND DAMAGE THE ENGINES

1. Remove the covers (4) from the pitot—static probes.

   **CAUTION**

   MAKE SURE THE PITOT PROBE COVER IS IN GOOD WORKING CONDITION WITH NO EVIDENCE OF DAMAGE, ESPECIALLY FRAYING AROUND COVER OPENING, FRAYED FIBER FROM COVER COMBINED WITH OTHER SUBSTANCES SUCH AS DIRT, GREASE OR FLUIDS CAN CAUSE OBSTRUCTION IN THE PROBE.

2. Remove the PITOT PROBES COVERED tag from the left control wheel in the flight deck.

3. Remove the tape of covers from the items that follow:

   a. The temperature probes

   b. The angle—of—attack sensors

   c. The ice detector (when installed)

| | |
|---|---|
| **WARNING** | FAILURE TO REMOVE BARRICADE TAPE AND VINYL ADHESIVE TAPE FROM THE STATIC PORTS BEFORE FLIGHT MAY CAUSE LARGE ERRORS IN AIRSPEED-SENSING AND ALTITUDE-SENSING SIGNALS WHICH MAY LEAD TO Loss OF SAFE FLIGHT. |
| **CAUTION** | REMOVE ALL BARRICADE TAPE AND VINYL ADHESIVE TAPE. ENGINES SHOULD NOT BE OPERATED WITH COVERINGS IN PLACE BECAUSE THE COVERINGS CAN COME OFF AND DAMAGE THE ENGINES. |

4. Remove alt barricade tape and vinyl adhesive tape from the static ports.

   a. Inspect each static port and if necessary use naphtha or equivalent to remove all tape residue, dirt and other contaminants around the port.

5. Remove the STATIC PORTS COVERED tag from the left control wheel ir the flight deck.

6. If the airplane was parked for more than 1 year on the same heading, do a compass swing (AMM 34—24—00/201).

G. In cold weather, it is necessary to drain fuel tank sumps prior to fueling to remove water from fuel tanks if the airplane has been idle for more than 45 minutes prior to fueling. Drain fuel tank sumps again after refueling if the airplane has been idle for 2 hours or more after refueling. In cold weather, water can freeze and not let the drain valves open.

## MOORING

### General

A. The airplane is designed to withstand high velocity ground winds from any angle without mooring. Special mooring provisions in the structure are considered unnecessary due to the weight of the airplane. But when high winds are expected, extra preventative measures are advised. On dry pavement when winds of more than 85 knots are expected, mooring at the wheels wi ll prevent the airplane from rolling and reduce the possibi lity of structural damage. Mooring is advised for sudden gusts as well as for severe winds of longer duration. As the surface becomes slippery, mooring is needed at lower wind velocities to prevent side skidding and yawing. On wet pavement, mooring is recommended for anticipated winds of 75 knots and above. On icy pavement, mooring is recommended if Hinds are expected to exceed 40 knots. Mooring is recommended when winds are expected to exceed the velocities summarized in the fol lowing table. Cables may be attached to the main gear tow lug attachments and to nose gear mooring fittings to secure the airplane.

| Pavement Condition | Expected Wind Velocities (knots) |
|---|---|
| Dry | 85 or above |
| Wet | 75 or above |
| Icy | 40 or above |

B. The effect of head winds on the pitching of an airplane can be reduced by increasing the airplane weight, by shifting the center of gravity forward, and by adjusting the horizontal stabi lizer position to obtain an airplane nose down attitude.

### Equipment and Materials

A. Fitting Assembly — Nose Mooring F 72780

B. Wheel Chocks

C. Fitting Assembly, Nose Mooring — F80226 composed of:

1. Mooring Assembly — F80226—1
2. Fly—Away Attach Assembly - 80226-2

## High Wind Conditions Mooring

(Fig. 201)

A. Park airplane as described in AMM 10—10—00, except that parking brakes must be Left on. Place wheel chocks about 3 inches forward and aft of at least one set of main gear wheels per gear and tie chocks together. If possible, head airplane into the wind.

**CAUTION**

MAKE SURE THAT THE WHEEL CHOCKS ARE CORRECTLY INSTALLED. IF THE WHEEL CHOCKS ARE NOT CORRECTLY INSTALLED, THE AIRPLANE CAN MOVE DURING HIGH WINDS. DAMAGE TO THE AIRPLANE CAN OCCUR.

**WARNING**

MAKE SURE THAT WHEEL CHOCKS ARE SECURED. IN HIGH WINDS A LOOSE CHOCK COULD DAMAGE EQUIPMENT OR CAUSE INJURY TO PERSONNEL.

**CAUTION**

AIRPLANE SHOULD BE HEADED STRAIGHT INTO THE WIND TO PREVENT UNEXPECTED MOVEMENT THAT CAN DAMAGE STRUCTURE.

B. Set parking brakes by depressing brake pedals (toe of rudder pedals) and pulling up on the parking brake handle located on the captain's control stand. Relieve pressure on the brake pedals before Letting go of the parking brake handle.

**CAUTION**

AFTER PARKING BRAKES HAVE BEEN SET THEY WILL REMAIN EFFECTIVE APPROXIMATELY 12 HOURS. AT THIS TIME THEY SHOULD BE RELEASED, HYDRAULIC PRESSURE RESTORED AND PARKING BRAKES RESET.

C. Make sure that flaps are in full up position to reduce wing lift.

**CAUTION**

DO NOT RESTRAIN THE CONTROL COLUMN OR RUDDER PEDALS. DOING SO COULD RESULT IN CONTROL SYSTEM DAMAGE.

D. Attach mooring cables to main Landing gear.

1. Attach a cable at the main gear tow lug attachment on the bottom side of each main landing gear.

2. Secure the mooring cables in a forward and aft direction. This attachment will restrain movement in the forward and aft direction and limit side movement.

E. Attach mooring cables to nose landing gear.

1. On airplanes without fly—away attach assembly, attach nose mooring fitting ( if available) to nose gear wheel hub. If nose mooring fitting is not available proceed to step (2).

   a. Remove two hubcap bolts. The removed hubcap bolts must be directly opposite.

      NOTE: Provisions for hubcap bolts storage are located in the nose mooring fitting tie bar.

   b. Position nose mooring Lugs in wheel hubs and install attachment nuts.

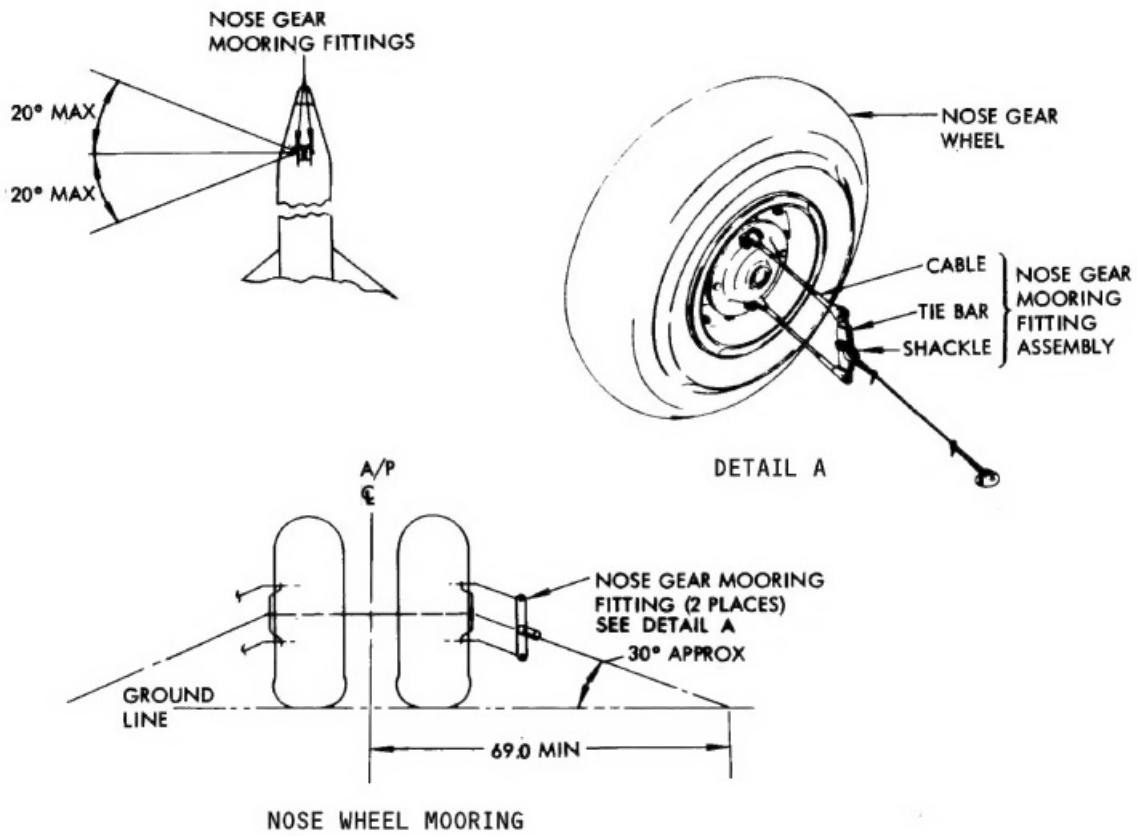


Mooring Diagram
Figure 201

2. On airplanes with fly—away attach assembly, attach mooring assembly to fly—away attach assembly.

3. If nose mooring fitting is not available, attach mooring cable to the nose gear tow Lugs.

   a. Secure the mooring cables in a forward and aft direction. This attachment will restrain movement in the forward and aft direction and Limit side movement.

NOTE: Pad the nose gear in the area which is contacted by the mooring cables.

F. Check tension on all the mooring cables to ascertain that cables are equally Loaded to prevent overloading any Landing gear or associated structure.

G. Fuel the airplane to its maximum fuel capacity and move CG forward as far as possible.

H. Close all doors, hatches, and see that al l plugs are secured in place.

I. Anchor, or remove from the vicinity of the airplane, al l stands or movable equipment which could col lide with the airplane.

## Procedure Recommended in Lieu of Mooring

A. Park airplane in an uncongested area in accordance with AMM 10—10—00. Wheels should be chocked and the parking brake must be left on.

**WARNING**

MAKE SURE THAT WHEEL CHOCKS ARE SECURE. IN HIGH WINDS A LOOSE CHOCK COULD CAUSE DAMAGE TO EQUIPMENT OR INJURY TO PERSONNEL.

**CAUTION**

AIRPLANE IS MOST STABLE WHEN HEADED STRAIGHT INTO THE WIND.

B. Set parking brakes by depressing brake pedals (toe of rudder pedals) and pulling up on the parking brake handle located on the captain's control stand. Relieve pressure on the brake pedals before letting go of the parking brake handle.

**CAUTION**

AFTER PARKING BRAKES HAVE BEEN SET THEY WILL REMAIN EFFECTIVE APPROXIMATELY 12 HOURS. AT THIS TIME THEY SHOULD BE RELEASED, HYDRAULIC PRESSURE RESTORED AND PARKING BRAKES RESET (AMM 32-44-00/501 ).

C. Be sure flaps are in full up position to reduce wing lift.

D. Set the horizontal stabilizer to an airplane nosedown position to reduce pitching.

**CAUTION**

DO NOT RESTRAIN THE CONTROL COLUMN OR RUDDER PEDALS. DOING SO COULD RESULT IN CONTROL SYSTEM DAMAGE.

E. Fuel airplane to its maximum full capacity and move the center of gravity forward as far as possible.

F. Close all doors, hatches and see that all plugs are secured in place. Anchor or remove from the vicinity of the airplane, all stands or movable equipment which would

collide with the airplane.

## Documents / Resources

### Available languages

Deutsch Français Español Mexicano Dutch

### Other ManualsLib Projects

www.manualslib.com

www.manualslib.de

www.manualslib.es

www.manualslib.fr

www.manualslib.nl

www.manualslib.mx

www.manualslib.tech 30+ languages