Career Guidance and College Admission Chance Prediction System

A Main Project Report
submitted in partial fulfillment of the requirements for the
award of the Degree of

Master Of Computer Applications
UNDER
APJ Abdul Kalam Technological University

BY

MUHAZEENA FATHIMA
MES22MCA-2038

DEPARTMENT OF COMPUTER APPLICATIONS
MES COLLEGE OF ENGINEERING
KUTTIPPURAM, MALAPPURAM - 679 582

April 2024

Declaration

I undersigned hereby declare that the main project report **Career Guidance and College Admission Chance Prediction System** submitted in partial fulfillment of the requirements for the award of *Degree of Master of Computer Applications* under *APJ Abdul Kalam Technological University* is a bona fide record done by me under the supervision of **Mr. Vasudevan T V**. This submission represents my ideas in my own words and where ideas or words of others have been included, I have adequately and accurately cited and referenced the original sources. I also declare that I have adhered to the ethics of academic honesty and integrity and have not misrepresented or fabricated any data or idea or fact or source in my submission.I understand that any violation of the above will be a cause for disciplinary action by the institute and / or the University and can also evoke penal action from the sources which have thus not been properly cited or from whom proper permission has not been obtained. This report has not been previously formed the basis for the award of any degree, diploma or similar title of any other University.

Sincerely,
MuhazeenaFathima
MES22MCA-2038

Place: Kuttippuram

Date:

MES COLLEGE OF ENGINEERING

KUTTIPPURAM, KERALA - 679 582
(A NAAC ACCREDITED INSTITUTION WITH NBA ACCREDITED DEPARTMENTS, APPROVED BY AICTE AND AFFILIATED TO APJ ABDUL KALAM TECHNOLOGICAL UNIVERSITY)

DEPARTMENT OF COMPUTER APPLICATIONS

CERTIFICATE

This is to certify that the main project report entitled **Career Guidance and College Admission Chance Prediction System** is a bona fide record of the main project work carried out by **MUHAZEENA FATHIMA (MES22MCA-2038)**, fourth semester student of the department, during the academic year 2023-24, in partial fulfillment of the requirements for the award of *Degree of Master of Computer Applications* under *APJ Abdul Kalam Technological University*. This report in any form has not been submitted to any other University or Institution for any purpose.

Internal Supervisor(s) External Supervisor(s)

External Examiner Head of the Department

Acknowledgement

My endeavor stands incomplete without dedicating my gratitude to a few people who have contributed towards the successful completion of my main project.
I pay my gratitude to the Almighty for His invisible help and blessing for the fulfillment of this work .
At the outset I express my heart full thanks to our **Head of the Department**, **Prof.Hyderali.K** for permitting me to do this main project.
I take this opportunity to express my profound gratitude to **Mr. Vasudevan T V**, my **guide**, for his valuable support and help in my main project.
I am also grateful to all our teaching and non teaching staff for their encouragement, guidance and whole-hearted support.
Last but not least, I am gratefully indebted to my family and friends, who gave me their precious help in my main project.

Sincerely,
Muhazeena Fathima
MES22MCA-2038

Abstract

The project "The Career Guidance and College Admission Chance Prediction System (CGCAPS)" is an innovative web application designed to assist students in navigating the complex college admission process. It combines two key functionalities: college guidance and admission chance prediction.
The college guidance aspect provides students with comprehensive information about various colleges, including course offerings, campus amenities, faculty profiles, and peer reviews, helping them identify institutions that align with their preferences and aspirations.
The admission chance prediction feature utilizes advanced machine learning algorithms to analyze historical admission data alongside the student's academic achievements, standardized test scores, and extracurricular accomplishments, providing a predictive likelihood of admission to specific colleges. This helps students evaluate their competitiveness and strategically select colleges that match their qualifications and aspirations.
Additionally, CGCAPS serves as a platform for BSc Computer Science students to enhance their skills through tasks like database design, web development, machine learning model creation, and user interface integration.
Beyond admission assistance, CGCAPS offers insights into colleges' placement records, industry partnerships, and career-related services, enabling students to make informed decisions that align with their professional aspirations.
Overall, CGCAPS embodies the trend of leveraging technology to streamline and enhance the higher education experience, emphasizing its significance in shaping the future of education

Table Of Contents

1 Introduction **1**
1.1 Background 2
1.1.1 Motivation 3
1.2 Objective 3
1.2.1 Technical Objectives 4
1.3 Contribution 4
1.3.1 Personalized Career Guidance 5
1.3.2 Streamlined College Search 5
1.3.3 Enhanced Decision-Making 5
1.3.4 Promotion of Equity in Education 5
1.4 Report Organisation 6
1.5 Report Organisation 6

2 Literature Survey **7**

3 Methodology **9**
3.1 Introduction 9
3.2 Workflow 10
3.2.1 Description of process 10
3.3 Data Flow Diagram 12
3.3.1 DFD Level 0 12
3.3.2 DFD Level 1.1 13
3.3.3 DFD Level 1.2 14
3.3.4 DFD Level 1.3 16
3.3.5 DFD Level 1.4 17
3.3.6 DFD Level 1.5 18
3.4 Implementation 19

4 Agile Methodology **20**
4.1 User Story 21
4.2 Product Backlog 24
4.3 Project Plan 24
4.4 Sprint Backlog (Plan) 25
4.5 Sprint Backlog (Actual) 33
4.6 Product Backlog Review 40
4.7 Sprint Review 43
4.8 Testing and Validation 47
4.9 Git 53

5 Conclusion **54**

Bibliography **55**

A Source Code **56**

B Output **62**

C Git History **69**

List of Figures

3.1 DFD Level 0 13
3.2 DFD Level 1.1 14
3.3 DFD Level 1.2 15
3.4 DFD Level 1.3 16
3.5 DFD Level 1.3 17
3.6 DFD Level 1.3 18

B.1 Admin view & verify college 62
B.2 agency view with complaints 63
B.3 expert view with interview vedio 63
B.4 college view with view job details 64
B.5 android home page 65
B.6 predicting college to user 66
B.7 attend test to interview 67
B.8 job vacancy 68

C.1 Git history of commits 1.1 69
C.2 Git history of commits 1.2 70
C.3 Git history of commits 1.3 70
C.4 Git history of commits 2.1 71
C.5 Git history of commits 2.2 71

List of Tables

4.1 User Story 21
4.1 User Story (Continued) 22
4.1 User Story (Continued) 23
4.1 User Story (Continued) 24
4.2 Product Backlog 25
4.3 Project Plan 25
4.4 Sprint 1 Plan 27
4.5 Sprint 2 Plan 28
4.6 Sprint 3 Plan 29
4.7 Sprint 4 Plan 30
4.8 Sprint 5 Plan 31
4.9 Sprint 6 Plan 32
4.10 Sprint 1 Actual 34
4.11 Sprint 2 Actual 35
4.12 Sprint 3 Actual 36
4.13 Sprint 4 Actual 37
4.14 Sprint 5 Actual 38
4.15 Sprint 6 Actual 39
4.16 Product Backlog Review (Sprint1) 40
4.17 Product Backlog Review (Sprint2) 40
4.18 Product Backlog Review (Sprint3) 41
4.19 Product Backlog Review (Sprint4) 41
4.20 Product Backlog Review (Sprint5) 42
4.21 Product Backlog Review (Sprint6) 42
4.22 Sprint Review (Sprint1) 43
4.23 Sprint Review (Sprint2) 44
4.24 Sprint Review (Sprint3) 45
4.25 Sprint Review (Sprint4) 45

4.26 Sprint Review(Sprint5) 46
4.27 Sprint Review (Sprint6) 46
4.28 Testing and Validation (Sprint1) 47
4.29 Testing and Validation (Sprint2) 48
4.30 Testing and Validation (Sprint3) 49
4.31 Testing and Validation (Sprint4) 50
4.32 Testing and Validation (Sprint5) 51
4.33 Testing and Validation (Sprint6) 52

Chapter 1

Introduction

The college admission process can be intricate and overwhelming for students aspiring to pursue higher education. To address this challenge, this project introduces the Career Guidance and College Admission Chance Prediction System (CGCAPS). This innovative system offers a user-friendly web application that combines two essential functions: college guidance and admission chance prediction. By providing personalized recommendations and insights, CGCAPS aims to alleviate the stress and uncertainty associated with college admissions. The college guidance component of CGCAPS furnishes students with comprehensive information about various colleges. Details encompass course offerings, campus amenities, faculty profiles, and peer reviews. CGCAPS assists students in identifying institutions that align with their preferences and aspirations. The admission chance prediction aspect employs advanced machine learning algorithms, analyzing historical admission data alongside the student's academic achievements, standardized test scores, and extracurricular accomplishments, to calculate a predictive likelihood of admission to specific colleges. This functionality enables students to evaluate their competitiveness and strategically select colleges that match their qualifications and aspirations. Additionally, CGCAPS serves as a comprehensive platform for BSc Computer Science students, providing them with an opportunity to enhance their skills through tasks like database design, web development, machine learning model creation, and user interface integration. CGCAPS goes beyond admission assistance; it contributes to students' long-term success by helping them attain their career goals through placements. The system offers insights into various colleges' placement records, industry partnerships, and career-related services. By considering these fac-

tors, students can strategically align their college choices with institutions that offer strong placement opportunities in their desired fields. With this feature, CGCAPS equips students not only to secure admissions but also to make informed decisions that set them on a path towards realizing their professional aspirations. As CGCAPS addresses the challenges of both college admissions and career preparation, it embodies the current trend of leveraging technology to streamline and enhance the higher education experience, emphasizing its significance in shaping the future of education.

1.1 Background

The background to the Career Guidance and College Admission Chance Prediction System (CGCAPS) project stems from the challenges and complexities that students typically face when navigating the college admission process. In many educational systems worldwide, this process can be daunting, particularly for students who lack access to comprehensive guidance and resources.

Traditionally, students rely on a variety of sources such as school counselors, online forums, and college websites to gather information about colleges and assess their chances of admission. However, these resources are often fragmented and may not provide accurate or personalized guidance. Moreover, students may struggle to align their academic achievements, extracurricular activities, and career aspirations with suitable college choices.

Recognizing these challenges, the creators of CGCAPS envisioned a holistic solution that integrates college guidance with admission chance prediction, thereby streamlining the process for students and providing them with actionable insights to make informed decisions. By leveraging technologies such as machine learning and web development, CGCAPS aims to offer a user-friendly platform where students can explore colleges, receive personalized recommendations, and assess their likelihood of admission based on their academic profile and other relevant factors.

Furthermore, CGCAPS extends its functionality beyond college admissions by offering insights into career pathways and placement opportunities, thus empowering students to align their educational choices with their long-term career goals.

In summary, CGCAPS emerged as a response to the fragmented nature of existing college admission processes and the need for a comprehensive,

technology-driven solution to support students in their educational and career journeys.

1.1.1 Motivation

The Career Guidance and College Admission Chance Prediction System (CGCAPS) project is driven by the imperative to address the challenges and uncertainties encountered by students during the college admission process. In a landscape marked by fragmented information and limited guidance, CGCAPS seeks to empower students by providing a comprehensive platform that combines college guidance with admission chance prediction. By leveraging cutting-edge technologies such as machine learning and web development, CGCAPS aims to streamline the college admission journey, promote equity in education, and foster career readiness among students. Through personalized recommendations, centralized information, and insights into potential career pathways, CGCAPS endeavors to make a meaningful impact on the lives of students, ensuring that all individuals have equal access to the resources and support they need to pursue their educational and career aspirations.

1.2 Objective

The objectives of the Career Guidance and College Admission Chance Prediction System (CGCAPS) project encompass several key areas aimed at providing comprehensive support to students in their educational and career pursuits. Firstly, the project aims to develop robust tools for conducting interest and aptitude assessments, allowing for a deeper understanding of users' strengths, preferences, and potential career paths. Building upon this assessment data, CGCAPS intends to implement an algorithm that generates personalized career recommendations tailored to users' skills, interests, and aspirations. Additionally, the project seeks to offer guidance on educational pathways by recommending majors, courses, and extracurricular activities aligned with users' career goals. To facilitate informed decision-making, CGCAPS will integrate features for college search and comparison, enabling users to explore institutions based on their chosen career paths, preferences, and location, and providing a comparison tool for evaluating different colleges. Finally, the project aims to develop a predictive model that assesses

users' academic performance, extracurricular activities, and other relevant factors to estimate their chances of admission to specific colleges or universities. Through these objectives, CGCAPS endeavors to empower students with the tools and information they need to make informed decisions about their educational and career pathways.

1.2.1 Technical Objectives

The technical objectives of the Career Guidance and College Admission Chance Prediction System (CGCAPS) project are as follows: firstly, develop tools for conducting comprehensive interest and aptitude assessments utilizing algorithms for effective analysis. Secondly, implement machine learning algorithms to generate personalized career recommendations based on assessment results. Thirdly, design an intuitive user interface for educational pathway guidance, integrating features like recommended majors, courses, and extracurricular activities. Fourthly, employ database management techniques to enable efficient college search and comparison functionalities. Lastly, develop predictive models using statistical analysis and machine learning to estimate users' admission chances to specific colleges or universities. These objectives collectively aim to create a user-friendly, technologically advanced platform to support students in their educational and career pursuits.

1.3 Contribution

The CGCAPS project contributes significantly by providing a holistic solution to the challenges students face during the college admission process and career planning. Through advanced technologies, it offers personalized career recommendations based on comprehensive interest and aptitude assessments, guiding students towards suitable majors, courses, and extracurricular activities aligned with their aspirations. Additionally, CGCAPS simplifies the college search process and aids decision-making by enabling users to explore and compare institutions efficiently. The predictive models developed by CGCAPS estimate users' admission chances, empowering them to make informed choices. Overall, CGCAPS aims to streamline the college admission journey, promote equitable access to education, and support students in achieving their educational and career goals.

1.3.1 Personalized Career Guidance

CGCAPS revolutionizes career guidance by tailoring recommendations to individual users' interests, aptitudes, and aspirations. By employing advanced algorithms, the system analyzes user data to provide insightful suggestions for academic and career paths. This personalized approach empowers students to make informed decisions about their future, ensuring that their choices align with their unique strengths and goals. Through CGCAPS, students receive guidance that goes beyond generic advice, allowing them to embark on educational journeys tailored to their specific needs and aspirations.

1.3.2 Streamlined College Search

With CGCAPS, the college search process becomes streamlined and efficient, thanks to its user-friendly interface and comprehensive search functionalities. Students can easily explore various colleges based on criteria such as career paths, preferences, and location. Additionally, the platform offers comparison tools that enable students to evaluate different institutions side by side, facilitating informed decision-making. By centralizing college information and simplifying the search process, CGCAPS empowers students to find the right fit for their educational and career goals.

1.3.3 Enhanced Decision-Making

CGCAPS enhances students' decision-making by providing insights into their admission chances to specific colleges or universities. Through predictive models that consider academic performance, extracurricular activities, and other relevant factors, students can assess their competitiveness and strategize their college choices effectively. This predictive capability equips students with valuable information that enables them to make well-informed decisions about where to apply and increases their chances of admission to institutions that align with their aspirations.

1.3.4 Promotion of Equity in Education

By offering comprehensive guidance and accessibility features, CGCAPS promotes equity in education. Regardless of their background or circumstances, all students have equal access to information and resources that support their

educational and career aspirations. CGCAPS levels the playing field by providing tailored guidance and support to students, ensuring that everyone has the opportunity to pursue their academic and career goals. In doing so, the project contributes to creating a more equitable educational landscape where every student has the tools and support they need to succeed.

1.4 Report Organisation

Of course! Here's the structure for the report organization of your project, similar to the one provided for your friend's project:

1.5 Report Organisation

This report is structured to offer a comprehensive overview of the "Career Guidance and College Admission Chance Prediction System (CGCAPS)" project, detailing its methodology, findings, and contributions. Starting with an Introduction that provides context by outlining the project's objectives and significance, the report progresses to a thorough Literature Review, which examines existing research in college admissions, career guidance systems, and relevant technologies. Following this, the Methodology section elaborates on the technical approach employed in CGCAPS development, while an explanation of Agile Methodology sheds light on the project management strategies utilized. A Conclusion section wraps up the main findings and reflections, offering insights into future research directions. The References section ensures academic integrity by listing all cited sources, while appendices provide supplementary materials including source code, outputs, and Git history for in-depth exploration of the project's intricacies. This organized structure aims to facilitate understanding and navigation through the various aspects of the project, enabling readers to grasp its scope, contributions, and implications effectively.

Chapter 2

Literature Survey

The landscape of educational technology has evolved significantly in recent years, particularly in the realm of college admission guidance and prediction systems. Research endeavors have delved into the application of machine learning and data mining techniques to forecast college admissions with increasing accuracy. Studies have explored algorithms such as Decision Trees, Random Forest, and Support Vector Machines to analyze historical admission data alongside student profiles, enabling the prediction of admission probabilities. Concurrently, the development of personalized career guidance systems has gained traction, leveraging artificial intelligence to offer tailored recommendations based on user preferences, skills, and industry trends. These systems serve as invaluable resources for students, facilitating informed decisions about college selection and career trajectories. Furthermore, the integration of college admission guidance with comprehensive career counseling has emerged as a promising approach, providing students with holistic support throughout their educational journey. By amalgamating multiple functionalities into unified platforms, these systems contribute to streamlining the college admission process and empowering students to make strategic choices aligned with their aspirations and long-term goals. Additionally, the discourse surrounding security and privacy in educational systems underscores the importance of safeguarding sensitive student data, ensuring the integrity and confidentiality of information throughout the educational technology ecosystem. In tandem with advancements in college admission guidance and career counseling, integrated systems have emerged to provide students with comprehensive support. These platforms offer a myriad of services ranging from college search and admission chance pre-

diction to career pathway exploration and placement assistance. By consolidating diverse functionalities into cohesive interfaces, these systems cater to the multifaceted needs of students navigating the complexities of higher education. Through intuitive user experiences and sophisticated algorithms, these platforms empower students to make well-informed decisions about their academic pursuits and professional trajectories. Moreover, they foster a sense of agency and confidence among users, equipping them with the tools and resources necessary to navigate the transition from secondary to tertiary education and beyond.

Simultaneously, the discourse surrounding security and privacy in educational technology remains paramount. As these systems collect and process vast amounts of sensitive student data, ensuring robust security measures and privacy protocols is imperative. Research endeavors have focused on identifying and mitigating potential threats and vulnerabilities, employing encryption techniques, access controls, and anonymization methods to safeguard user information. By prioritizing data security and privacy, educational technology developers and stakeholders uphold ethical standards and engender trust among users. Moving forward, continued innovation and collaboration are essential to address evolving security challenges and uphold the integrity and confidentiality of educational data.

Chapter 3

Methodology

3.1 Introduction

The methodology for the development of the Career Guidance and College Admission Chance Prediction System (CGCAPS) involves several key steps. Initially, a thorough requirement analysis is conducted to understand the needs and expectations of stakeholders, including students, college administrators, and career counselors. Following this, the system architecture is designed, encompassing database schema, user interface, and backend functionalities, ensuring a seamless user experience and efficient data flow. Database design involves the creation of a relational database schema to store user profiles, college information, admission data, and career trends, among other datasets, with a focus on data integrity. Frontend development involves implementing the user interface using HTML, CSS, Bootstrap, and JavaScript, designing intuitive and responsive web pages. Backend development utilizes appropriate technologies such as Python or Android to implement server-side logic, including admission chance prediction algorithms based on historical data and user profiles. Integration and testing ensure the cohesion and reliability of the system through rigorous testing procedures. Deployment on a suitable platform follows, accompanied by ongoing maintenance and support to address user needs and ensure system efficiency. User training and feedback mechanisms are integral throughout the development process, facilitating continuous improvement and optimization based on user input and evolving requirements.

3.2 Workflow

The workflow of the Career Guidance and College Admission Chance Prediction System (CGCAPS) begins with gathering requirements from stakeholders, followed by user registration where individuals provide their academic background and career interests. Users then undergo comprehensive interest and aptitude assessments to determine their strengths and preferences. Based on these assessments, personalized career recommendations are generated, guiding users towards suitable career paths and educational pathways aligned with their profiles. The system facilitates college search and comparison, allowing users to explore institutions based on their chosen career paths and preferences. Additionally, a predictive model assesses users' academic performance and extracurricular activities to estimate their chances of admission to specific colleges. Placement assistance is provided by offering insights into colleges' placement records and career-related services. The system also includes separate interfaces for administrators, experts, and placement agencies to manage users and resources efficiently. Users interact with the platform by attending tests, applying for jobs, and accessing various resources. Security and privacy protocols are paramount throughout the process to safeguard user data. Continuous improvement is prioritized through user feedback and iterative refinements to enhance the overall user experience and system utility.

3.2.1 Description of process

The workflow of the Career Guidance and College Admission Chance Prediction System (CGCAPS) encompasses several interconnected processes aimed at assisting users in their educational and career endeavors:

1. **Requirement Gathering:** This initial phase involves engaging with stakeholders, including students, college administrators, and career counselors, to understand their needs and expectations from the system. It includes identifying key functionalities, user roles, and data requirements.

2. **User Registration:** Users register on the CGCAPS platform by providing basic information such as their name, email address, educational background, and career interests. Registration enables personalized recommendations and access to system features.

3. **Interest and Aptitude Assessment:** Users undergo comprehensive assessments designed to evaluate their interests, aptitudes, skills, and preferences. These assessments may include psychometric tests, personality assessments, and skill evaluations to provide insights into users' strengths and career inclinations.

4. **Personalized Career Recommendations:** Based on the results of the interest and aptitude assessments, the system generates personalized career recommendations for each user. These recommendations suggest suitable career paths, educational majors, courses, and extracurricular activities aligned with users' profiles and aspirations.

5. **Educational Pathway Guidance:** The system offers guidance on educational pathways, recommending specific majors, courses, and extracurricular activities tailored to users' career goals. It provides resources, tips, and advice to help users plan their academic journey effectively.

6. **College Search and Comparison:** Users can search for colleges and universities based on their chosen career paths, preferences, and geographical location. The system provides detailed information about institutions, including course offerings, campus amenities, faculty profiles, and placement records. Users can compare different colleges to make informed decisions about their higher education options.

7. **Admission Chance Prediction:** The system utilizes advanced machine learning algorithms to predict users' chances of admission to specific colleges or universities. It analyzes users' academic performance, standardized test scores, extracurricular activities, and other relevant factors to estimate their likelihood of acceptance.

8. **Placement Assistance:** CGCAPS offers insights into colleges' placement records, industry partnerships, and career-related services. Users can strategically align their college choices with institutions that offer strong placement opportunities in their desired fields. The system provides information about job openings, conducts placement tests, and facilitates the recruitment process.

9. **Admin, Expert, and Agency Interfaces:** The system includes separate interfaces for administrators, career experts, and placement agen-

cies to manage users and resources efficiently. Admins verify users, manage experts and agencies, handle complaints, and monitor system performance. Experts offer online courses, study materials, and career advice, while agencies post job listings, conduct tests, and manage placements.

10. **User Interaction:** Users interact with the system by attending tests, applying for jobs, viewing shortlists and interview information, accessing online courses and study materials, and receiving notifications and recommendations based on their profiles and preferences.

11. **Security and Privacy Protocols:** Robust security measures and privacy protocols are implemented throughout the system to protect user data and ensure the confidentiality of personal information. This includes encryption, access controls, and compliance with data protection regulations.

12. **Continuous Improvement:** The system continuously gathers user feedback and usage metrics to evaluate its effectiveness and identify areas for improvement. Iterative refinements are made to algorithms, features, and user interfaces based on feedback and evolving user needs, ensuring the system remains relevant and valuable to its users.

3.3 Data Flow Diagram

The Data Flow Diagram (DFD) provides a visual representation of the flow of data within the "Career Guidance and College Admission Chance Prediction System" project. Which consists of external entities, processes, data stores, and data flows intercon- nected to depict the flow of information within the system.

3.3.1 DFD Level 0

Apologies for the oversight. Here's the revised paragraph:
The Level 0 Data Flow Diagram (DFD) for the Career Guidance and College Admission System (CGCAPS) delineates the primary modules and interactions within the system. CGCAPS encompasses five key modules: Admin, Expert, User, College, and Agency. The Admin module regulates system

operations and permissions, overseeing user authentication and managing the addition and administration of experts and agencies. The Expert module furnishes users with indispensable career guidance and college admission support, providing resources such as online courses, study materials, and industry insights. The User module serves as the interface for students, enabling registration, login, and access to various features such as tests, job applications, and expert-provided resources. The College module facilitates the admission process, managing college details, admission records, and pertinent information. Additionally, the Agency module plays a pivotal role in the placement process, managing job listings, conducting tests, and facilitating placements. These modules seamlessly interact with a central database housing essential data such as college details, user profiles, job listings, and expert resources, ensuring efficient data retrieval and system functionality. Collectively, these components constitute the robust framework of CGCAPS, empowering students to navigate their educational and career trajectories effectively.

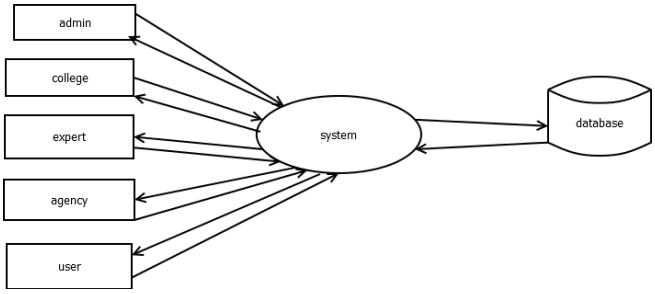

Figure 3.1: DFD Level 0

3.3.2 DFD Level 1.1

The Level 1.1 Data Flow Diagram (DFD) for the Admin module of our Career Guidance and College Admission System (CGCAPS) provides a detailed breakdown of the key tasks performed by administrators. It begins with the Admin logging into the system, gaining access to the Admin dashboard. From there, the Admin manages experts by adding, updating, or removing them as needed, ensuring a reliable pool of guidance resources. The Admin also oversees placement agencies and colleges within the system, maintaining accurate information and managing their profiles accordingly. Handling user

feedback and complaints is another crucial responsibility, ensuring effective communication with users. Additionally, the Admin monitors system performance and generates reports to evaluate system usage and performance. Overall, the Level 1 DFD highlights the essential tasks involved in system administration, ensuring the smooth operation and effectiveness of CGCAPS.

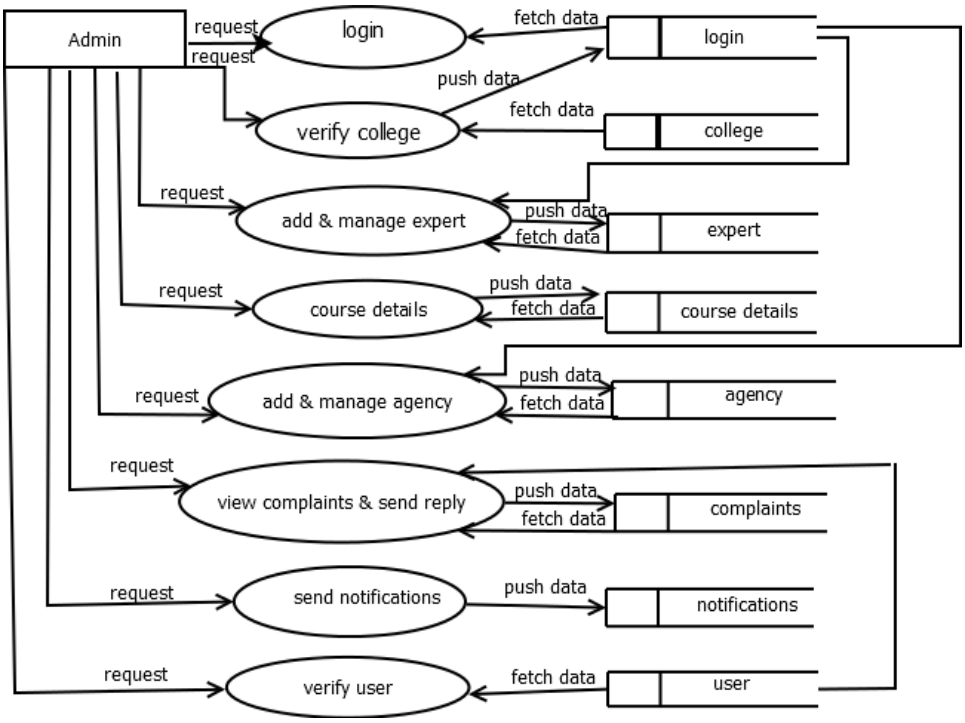

Figure 3.2: DFD Level 1.1

3.3.3 DFD Level 1.2

In the Level 1.2 Data Flow Diagram (DFD) for the College module of our CGCAPS, administrators have the ability to manage colleges efficiently. This involves adding new colleges with details such as location and available courses, updating existing profiles to reflect changes accurately, and removing outdated information. Additionally, administrators oversee admission details, ensuring users have access to up-to-date information for informed decision-making. Overall, the Level 2 DFD illustrates the streamlined processes for

managing colleges within CGCAPS, enhancing the user experience and supporting educational aspirations effectively.

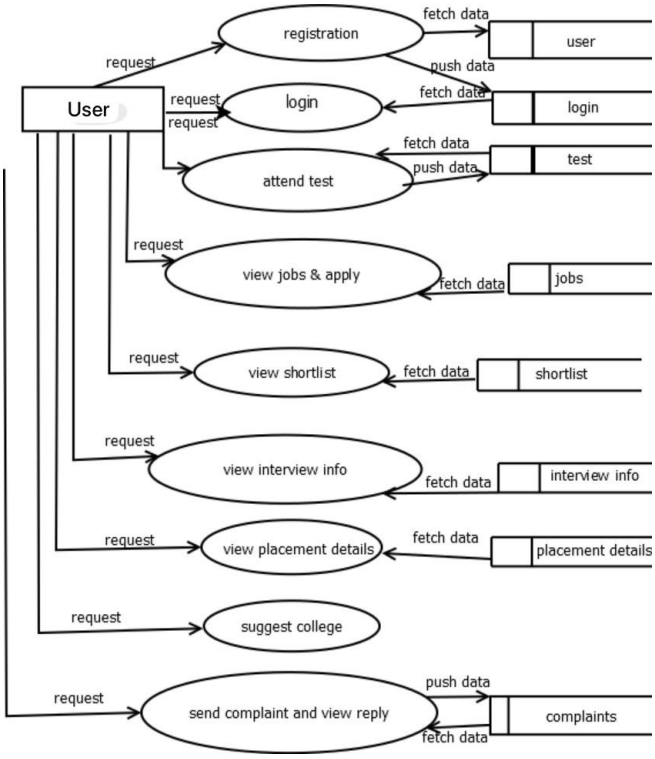

Figure 3.3: DFD Level 1.2

3.3.4 DFD Level 1.3

In the Level 1.3 Data Flow Diagram (DFD) for the Agency module of our CG-CAPS, placement agencies play a crucial role in facilitating job placements for users. Agencies receive job listings from administrators, which they can then manage by adding new listings, updating existing ones, and removing outdated postings. Users interact with agencies by applying for jobs, with agencies responsible for verifying and managing applications. Additionally, agencies provide interview information and facilitate the placement process, ensuring seamless communication between users and employers. Overall, the Level 3 DFD highlights the integral functions of agencies within CGCAPS, streamlining the job placement process and fostering connections between users and potential employers.

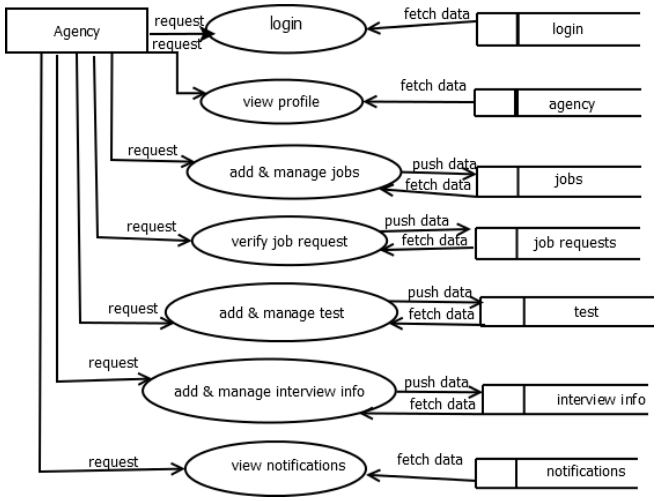

Figure 3.4: DFD Level 1.3

3.3.5 DFD Level 1.4

In the Level 1.4 Data Flow Diagram (DFD) for the Expert module of our CGCAPS, experts play a pivotal role in providing tailored guidance and support to users. Experts receive user queries and requests for assistance, which they address by offering personalized advice, recommending suitable courses and study materials, and providing insights into industry trends. They also contribute to the platform by adding new online courses, study materials, and tips to enhance user learning experiences. Additionally, experts stay updated on industry developments to provide relevant and timely information to users. Overall, the Level 4 DFD underscores the essential contributions of experts in guiding users towards their educational and career goals within CGCAPS.

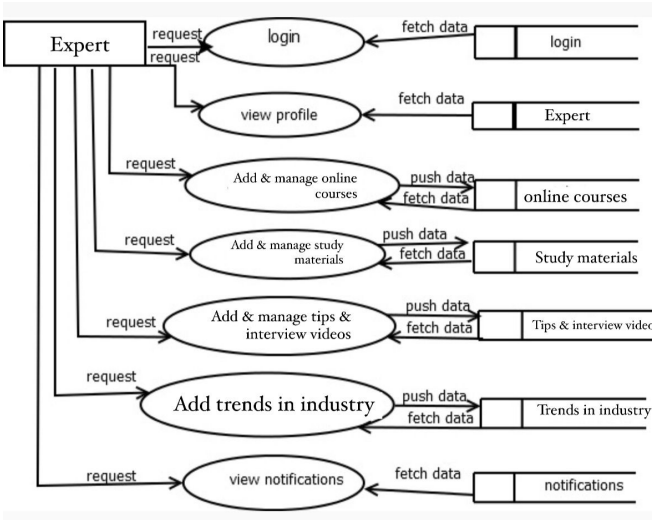

Figure 3.5: DFD Level 1.3

3.3.6 DFD Level 1.5

In the Level 1.5 Data Flow Diagram (DFD) for the User module of our CG-CAPS, users interact with the system to access a wide range of resources and services tailored to their educational and career needs. Users register and log in to the platform, providing their academic background, career interests, and preferences. They can attend tests, apply for jobs, and access expert-provided resources such as online courses, study materials, and industry insights. Additionally, users can receive personalized career recommendations and explore colleges based on their preferences and aspirations. The Level 5 DFD highlights the diverse functionalities available to users within CG-CAPS, empowering them to make informed decisions and progress towards their educational and career objectives.

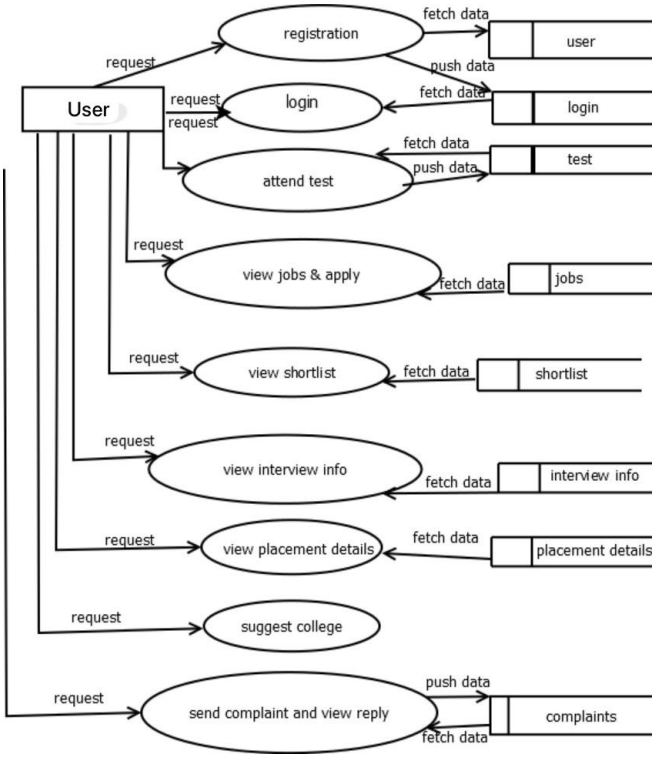

Figure 3.6: DFD Level 1.3

3.4 Implementation

The implementation of our Career Guidance and College Admission System (CGCAPS) involves several key steps to ensure its functionality and usability. Firstly, we focus on database design, creating a robust structure to store essential data such as user profiles, college details, job listings, and expert resources. Next, we develop the front-end interface using HTML, CSS, and JavaScript to provide users with an intuitive and visually appealing platform for navigation and interaction. Concurrently, the back-end is built using Python, facilitating data processing, user authentication, and system logic. We integrate MySQL as the database management system to store and manage data efficiently. Throughout the implementation process, we prioritize data security and privacy, implementing encryption protocols and access controls to safeguard user information. Additionally, rigorous testing is conducted to ensure the system's reliability, performance, and scalability. Continuous iteration and refinement are undertaken based on user feedback and system evaluation, ensuring that CGCAPS meets the needs and expectations of its users effectively.

Chapter 4

Agile Methodology

Agile methodology is characterized by its iterative nature, with development divided into small, incremental releases known as sprints. Each sprint typically lasts for a fixed duration, during which cross-functional teams collaborate to deliver working software functionality. This approach prioritizes continuous improvement, allowing for rapid adaptation to changing requirements and stakeholder feedback.

In the context of this project, agile methodology provided a framework for effective project management and development. It allowed for frequent interactions between team members, facilitating communication and collaboration throughout the project lifecycle. By breaking down the development process into manageable increments, we were able to deliver value to stakeholders in a timely manner and respond promptly to evolving project needs.

Moreover, agile methodology enabled us to embrace uncertainty and complexity inherent in the development of machine learning models. It encouraged experimentation and exploration, empowering us to iterate on our approach and refine our solutions based on empirical evidence and feedback. This iterative approach was particularly valuable during the model development phase, where experimentation and fine-tuning were essential for achieving optimal performance and accuracy.

Overall, the adoption of agile methodology played a pivotal role in the successful execution of this project. It fostered a collaborative and adaptive environment, allowing us to navigate challenges effectively and deliver a robust and effective solution for early detection of brain tumors using CNN technology.

4.1 User Story

User stories are concise, informal descriptions of a feature or functionality from the perspective of an end-user. They follow a specific format: "As a [type of user], I want [some goal] so that [some reason]." This format helps to clearly articulate the user's requirements, motivations, and expected outcomes, fostering collaboration and alignment among stakeholders. Throughout the Agile development process, user stories are continuously refined, prioritized, and implemented in iterative cycles known as sprints. This iterative approach allows for flexibility and adaptability, enabling the project team to respond to changing requirements and feedback from stakeholders effectively.

ID	**As a < type of user >**	**I Want to**	**So That I Can**
1	Admin	Login and manage expert,college,agency and user	Control the expert,college,agency and user registration
2	Admin	Add and manage expert	Control the expert details
3	Admin	Verify user	Verify user details
4	Admin	Send notification	Send notification to the user,agency,expert and college
5	Admin	Add and manage agency	Control agency's details
6	Admin	View complaint and send reply	View complaint and send reply User ,expert,agency and college
7	Agency	View profile	View the profiles of the agencys
8	Agency	Add and manage jobs	Control the different types of the job

Table 4.1: User Story

9	Agency	Add& manage test	Control the tests of the users
10	Agency	Verify job request	Verify all the job request
11	Agency	Add & manage interview info	Add & manage interview info
12	Agency	Add placement details	Add the placement details for users
13	Agency	Add & manage shortlist	Control the shortlist of the placed people
14	Agency	View notifications	View the notifications From others
15	College	View job details & forward	View job details and forwarded to users
16	College	View placement details	View the placement details of the students
17	College	View shortlist	View the shortlisted students that selected based on the tests
18	College	View notifications	View notifications comes from others
19	College	Add & manage admission details	Control the admission details of each students
20	College	View student requests	View all the student requests
21	College	View admission history	View the admission history of the students
22	User	Register and login	Register and login to the application
23	User	View jobs & apply	View jobs & apply for suited jobs

Table 4.1: User Story (Continued)

24	User	View short list	View short list and see the result
25	User	View interview info	View interview information such as time,date and place
26	User	View placement details	View the placement details after the interview
27	User	View online courses	View online courses And details based on my preferences
28	User	View study materials	View study materials Based on the courses
29	User	View interview videos	View interview videos for more clarification
30	User	View industry trends	View latest industry trends ,it's easy to choose my carrier
31	User	Suggest college	Suggest colleges based on preferences
32	User	Send complaint & View reply	Send complaint & View reply
33	Expert	View profile	View profile
34	Expert	Add and manage study materials	Edit and manage study materials Based on the courses

Table 4.1: User Story (Continued)

35	Expert	Add and manage interview videos	Edit and manage interview videos
36	Expert	Add industry trends	View latest industry trends ,it's easy to choose my carrier
37	Expert	Add and manage online courses	Suggest online courses
38	Expert	View notifications	View notifications

Table 4.1: User Story (Continued)

4.2 Product Backlog

In Agile Methodology, the product backlog represents a prioritized list of features, enhancements, and fixes for the project, serving as the single source of truth for the development team. So you can get a structured overview of the project's backlog items, detailing their ID, priority, estimated size in days, sprints they are associated with, current status, and corresponding task names. Each backlog item is uniquely identified by an ID, categorized by priority (e.g., High, Medium), and estimated in terms of development effort (in days). The "Sprint" column specifies the sprints in which the backlog items are planned for implementation, while the "Status" column indicates the current progress (e.g., Completed). Finally, the "Name" column provides descriptive names for each backlog item, summarizing the respective tasks or features. This table serves as a centralized reference for managing and tracking project tasks, enabling effective planning and prioritization throughout the development lifecycle.

4.3 Project Plan

In Agile methodology, the project plan is a living document that evolves continuously throughout the project lifecycle. It commences with a clear vision and objectives, followed by the creation of a prioritized product backlog. Release planning delineates the scope for each release, while sprint planning dissects backlog items into actionable tasks for short iterations known as sprints. With a total project duration of 81 days, spanning from January 29, 2024, to April 18, 2024, each sprint is set at 14 days, with the final sprint

ID	Priority	Size (days)	Sprint	Status	Name
1	Medium	7	1, 2, 3	Completed	Form Design
2	Medium	9	1, 2, 3	Completed	Interface Design
3	High	3	5, 6	Completed	Data Collection
4	High	3	5, 6	Completed	Model Training
5	High	5	5, 6	Completed	Model Creation
6	High	8	1, 2	Completed	Table Design
7	High	21	2, 3, 4, 5, 6	Completed	Coding
8	Medium	13	2, 3, 4, 5, 6	Completed	Testing Data
9	High	12	2, 3, 4, 5, 6	Completed	Output Generation

Table 4.2: Product Backlog

(sprint 6) spanning 11 days. The user story ID is assigned based on the order of work completion, initially focusing on the mini college admission management system, followed by the model implementation, which concludes in the final two sprints.

User Story (ID)	Sprint	Start Date	End Date	Days	Status
13,14,15,16,17	Sprint 1	29/01/2024	11/02/2024	14	Completed
18,19,20,21,22,23	Sprint 2	12/02/2024	25/02/2024	14	Completed
24,25,26,27,28,29	Sprint 3	26/02/2024	10/03/2024	14	Completed
31,32,33,34,35,36,37,38	Sprint 4	11/03/2024	24/03/2024	14	Completed
1, 2, 3,4,5,6	Sprint 5	25/03/2024	07/04/2024	14	Completed
7,8,9,10,11,12	Sprint 6	08/04/2024	18/04/2024	11	Completed

Table 4.3: Project Plan

4.4 Sprint Backlog (Plan)

The Sprint Backlog, an integral part of Agile methodology, serves as a prioritized road map of tasks selected from the Product Backlog for a specific sprint. It delineates the work to be accomplished and acts as a compass for

the team's daily endeavors, ensuring focus and alignment with sprint objectives. User IDs are strategically allocated, with IDs 13 to 17 assigned in Sprint 1, extending through Sprint 4 alongside IDs 31 to 38 which pertain to the mini hospital system. IDs 1 to 12 are divided evenly and incorporated into Sprints 5 and 6. The backlog items remain consistent with those outlined in the Product Backlog table, providing continuity and clarity in task allocation and execution.

Backlog Item	**Completion Date**	**Original Estimate**	**MON 29/01/24 05/02/24**	**TUE 30/01/24 06/02/24**	**WED 31/01/24 07/02/24**	**THU 01/02/24 08/02/24**	**FRI 02/02/24 09/02/24**	**SAT 03/02/24 10/02/24**	**SUN 04/02/24 11/02/24**
User Story 13,14,15, 16,17		Days	Days	Days	Days	Days	Days	Days	Days
Form Design	11/02/2024	4	1	1	0	0	1	0	1
Interface Design	10/02/2024	4	0	1	1	1	0	1	0
Table Design	04/02/2024	6	1	0	1	1	1	1	1
Total		14							

Table 4.4: Sprint 1 Plan

Backlog Item	**Completion Date**	**Original Estimate**	**MON 12/02/24 19/02/24**	**TUE 13/02/24 20/02/24**	**WED 14/02/24 21/02/24**	**THU 15/02/24 22/02/24**	**FRI 16/02/24 23/02/24**	**SAT 17/02/24 24/02/24**	**SUN 18/02/24 25/02/24**
User Story 18,19,20, 21,22,23		Days	Days	Days	Days	Days	Days	Days	Days
Form Design	15/02/2024	2	1	0	0	1	0	0	0
Interface Design	14/02/2024	2	0	1	1	0	0	0	0
Table Design	13/02/2024	2	1	1	0	0	0	0	0
Coding	24/02/2024	5	0	0	1	1	2	1	0
Testing Data	18/02/2024	2	0	0	0	0	0	1	1
Output Generation	25/02/2024	1	0	0	0	0	0	0	1
Total		14							

Table 4.5: Sprint 2 Plan

Backlog Item	**Completion Date**	**Original Estimate**	**MON 26/02/24 04/03/24**	**TUE 27/02/24 05/03/24**	**WED 28/02/24 06/03/24**	**THU 29/02/24 07/03/24**	**FRI 01/03/24 08/03/24**	**SAT 02/03/24 09/03/24**	**SUN 03/03/24 10/03/24**
User Story 24,25,26 ,27,28,29, 30		Days	Days	Days	Days	Days	Days	Days	Days
Form Design	26/02/2024	1	1	0	0	0	0	0	0
Interface Design	05/03/2024	3	0	2	1	0	0	0	0
Coding	08/03/2024	4	0	0	1	1	2	0	0
Testing Data	02/03/2024	3	1	0	0	1	0	1	0
Output Generation	10/03/2024	3	0	0	0	0	0	1	2
Total		14							

Table 4.6: Sprint 3 Plan

Backlog Item	**Completion Date**	**Original Estimate**	**MON 11/03/24 18/03/24**	**TUE 12/03/24 19/03/24**	**WED 13/03/24 20/03/24**	**THU 14/03/24 21/03/24**	**FRI 15/03/24 22/03/24**	**SAT 16/03/24 23/03/24**	**SUN 17/03/24 24/03/24**
User Story 31,32,33, 34,35,36, 37,38		Days	Days	Days	Days	Days	Days	Days	Days
Coding	22/03/2024	6	0	1	2	1	2	0	0
Testing Data	23/03/2024	4	1	1	0	1	0	1	0
Output Generation	24/03/2024	4	1	0	0	0	0	1	2
Total		14							

Table 4.7: Sprint 4 Plan

Backlog Item	**Completion Date**	**Original Estimate**	**MON 25/03/24 01/04/24**	**TUE 26/03/24 02/04/24**	**WED 27/03/24 03/04/24**	**THU 28/03/24 04/04/24**	**FRI 29/03/24 05/04/24**	**SAT 30/03/24 06/04/24**	**SUN 31/03/24 07/04/24**
User Story 1, 2, 3 4,5,6		Days	Days	Days	Days	Days	Days	Days	Days
Data Collection	28/03/2024	2	0	0	1	1	0	0	0
Model Training	30/03/2024	2	0	0	0	0	1	1	0
Model Creation	26/03/2024	2	1	1	0	0	0	0	0
Coding	03/04/2024	4	1	1	1	0	0	0	1
Testing Data	05/04/2024	2	0	0	0	1	1	0	0
Output Generation	07/04/2024	2	0	0	0	0	0	1	1
Total		14							

Table 4.8: Sprint 5 Plan

Backlog Item	**Completion Date**	**Original Estimate**	**MON 08/04/24 15/04/24**	**TUE 09/04/24 16/04/24**	**WED 10/04/24 17/04/24**	**THU 11/04/24 18/04/24**	**FRI 12/04/24**	**SAT 13/04/24**	**SUN 14/04/24**
User Story 7,8,9, 10,11,12		Days	Days	Days	Days	Days	Days	Days	Days
Data Collection	09/04/2024	1	0	1	0	0	0	0	0
Model Training	12/04/2024	3	0	0	1	1	1	0	0
Model Creation	08/04/2024	1	1	0	0	0	0	0	0
Coding	14/04/2024	2	0	0	0	0	0	1	1
Testing Data	16/04/2024	2	1	1	0	0	0	0	0
Output Generation	18/04/2024	2	0	0	1	1	0	0	0
Total		14							

Table 4.9: Sprint 6 Plan

4.5 Sprint Backlog (Actual)

The Sprint Backlog (Actual) serves as a dynamic guide for tasks and user stories chosen for implementation during each sprint within Agile Methodology. As the project progresses, this backlog adapts to prioritize high-value features and accommodate evolving requirements. While the overall project duration remains constant at 81 days, minor adjustments may occur within individual sprints. For instance, certain backlog items may be completed on days not initially allocated for their development. However, such changes do not extend or shorten the duration of sprints, each of which remains consistently set at a two-week (14-day) timeframe. These adjustments, such as reallocating time from one task to another, ensure efficient utilization of resources while adhering to project timelines. For example, if no day was initially allocated for form design on Saturday 03/02/2024 in Sprint 1's backlog plan, but it was later found necessary, time may be borrowed from another task, such as table design, to accommodate the additional work without impacting the sprint's overall duration.

Backlog Item	**Completion Date**	**Original Estimate**	**MON 29/01/24 05/02/24**	**TUE 30/01/24 06/02/24**	**WED 31/01/24 07/02/24**	**THU 01/02/24 08/02/24**	**FRI 02/02/24 09/02/24**	**SAT 03/02/24 10/02/24**	**SUN 04/02/24 11/02/24**
User Story 13,14,15 16,17		Days	Days	Days	Days	Days	Days	Days	Days
Form Design	11/02/2024	5	1	1	0	0	1	1	1
Interface Design	10/02/2024	3	0	0	1	1	0	1	0
Table Design	04/02/2024	6	1	1	1	1	1	0	1
Total		14							

Table 4.10: Sprint 1 Actual

Backlog Item	**Completion Date**	**Original Estimate**	**MON 12/02/24 19/02/24**	**TUE 13/02/24 20/02/24**	**WED 14/02/24 21/02/24**	**THU 15/02/24 22/02/24**	**FRI 16/02/24 23/02/24**	**SAT 17/02/24 24/02/24**	**SUN 18/02/24 25/02/24**
User Story 18,19,20, 21,22,23		Days	Days	Days	Days	Days	Days	Days	Days
Form Design	15/02/2024	2	1	0	0	1	0	0	0
Interface Design	14/02/2024	3	0	1	1	0	1	0	0
Table Design	13/02/2024	2	1	1	0	0	0	0	0
Coding	24/02/2024	4	0	0	1	1	1	1	0
Testing Data	18/02/2024	1	0	0	0	0	0	0	1
Output Generation	25/02/2024	2	0	0	0	0	0	1	1
Total		14							

Table 4.11: Sprint 2 Actual

Backlog Item	**Completion Date**	**Original Estimate**	**MON 26/02/24 04/03/24**	**TUE 27/02/24 05/03/24**	**WED 28/02/24 06/03/24**	**THU 29/02/24 07/03/24**	**FRI 01/03/24 08/03/24**	**SAT 02/03/24 09/03/24**	**SUN 03/03/24 10/03/24**
User Story 24,25,26, 27,28,29, 30		Days	Days	Days	Days	Days	Days	Days	Days
Form Design	02/03/2024	2	1	0	0	0	0	1	0
Interface Design	05/03/2024	3	0	2	1	0	0	0	0
Coding	08/03/2024	4	0	0	1	1	2	0	0
Testing Data	29/02/2024	2	1	0	0	1	0	0	0
Output Generation	10/03/2024	3	0	0	0	0	0	1	2
Total		14							

Table 4.12: Sprint 3 Actual

Backlog Item	**Completion Date**	**Original Estimate**	**MON 11/03/24 18/03/24**	**TUE 12/03/24 19/03/24**	**WED 13/03/24 20/03/24**	**THU 14/03/24 21/03/24**	**FRI 15/03/24 22/03/24**	**SAT 16/03/24 23/03/24**	**SUN 17/03/24 24/03/24**
User Story 31,32,33 34,35,36 37,38,39		Days	Days	Days	Days	Days	Days	Days	Days
Coding	22/03/2024	5	0	0	2	1	2	0	0
Testing Data	23/03/2024	5	1	2	0	1	0	1	0
Output Generation	24/03/2024	4	1	0	0	0	0	1	2
Total		14							

Table 4.13: Sprint 4 Actual

Backlog Item	**Completion Date**	**Original Estimate**	**MON 25/03/24 01/04/24**	**TUE 26/03/24 02/04/24**	**WED 27/03/24 03/04/24**	**THU 28/03/24 04/04/24**	**FRI 29/03/24 05/04/24**	**SAT 30/03/24 06/04/24**	**SUN 31/03/24 07/04/24**
User Story 1, 2, 3 4,5,6		Days	Days	Days	Days	Days	Days	Days	Days
Data Collection	28/03/2024	3	0	1	1	1	0	0	0
Model Training	30/03/2024	2	0	0	0	0	1	1	0
Model Creation	26/03/2024	2	1	1	0	0	0	0	0
Coding	03/04/2024	3	1	0	1	0	0	0	1
Testing Data	05/04/2024	2	0	0	0	1	1	0	0
Output Generation	07/04/2024	2	0	0	0	0	0	1	1
Total		14							

Table 4.14: Sprint 5 Actual

Backlog Item	**Completion Date**	**Original Estimate**	**MON 08/04/24 15/04/24**	**TUE 09/04/24 16/04/24**	**WED 10/04/24 17/04/24**	**THU 11/04/24 18/04/24**	**FRI 12/04/24**	**SAT 13/04/24**	**SUN 14/04/24**
User Story 7,8,9 10,11,12		Days	Days	Days	Days	Days	Days	Days	Days
Data Collection	09/04/2024	1	0	1	0	0	0	0	0
Model Training	12/04/2024	3	0	0	1	1	1	0	0
Model Creation	08/04/2024	1	1	0	0	0	0	0	0
Coding	14/04/2024	2	0	0	0	0	0	1	1
Testing Data	16/04/2024	1	0	1	0	0	0	0	0
Output Generation	18/04/2024	3	1	0	1	1	0	0	0
Total		14							

Table 4.15: Sprint 6 Actual

4.6 Product Backlog Review

This session typically occurs at the end of each sprint or iteration. During the review, the team discusses the items completed in the previous sprint, assesses their impact on the overall product vision, and considers any changes or additions necessary. It's an opportunity to ensure that the backlog remains aligned with the project goals and to prioritize upcoming work based on feedback and evolving requirements. Effective Product Backlog Reviews foster transparency, alignment, and continuous improvement within the Agile development process.

User story ID	**Comments from Scrum master if any**	**Comments from Product Owner if any**
13	need to add & manage shortlist	Satisfied
14	need to view notifications	Satisfied
15	need to view job details & forward	Satisfied
16	need to view placement details	Satisfied
17	need to view shortlist	Satisfied

Table 4.16: Product Backlog Review (Sprint1)

User story ID	**Comments from Scrum master if any**	**Comments from Product Owner if any**
18	Need to view notifications	Satisfied
19	Need to add & manage admission details	Satisfied
20	Need to view student requests	Satisfied
20	Need to view admission history	Satisfied
22	Need to register and login	Satisfied
23	Need to view jobs	Satisfied

Table 4.17: Product Backlog Review (Sprint2)

User story ID	Comments from Scrum master if any	Comments from Product Owner if any
24	Need to view short list	Satisfied
25	Need to view interview info	Satisfied
26	Need to view placement details	Satisfied
27	Need to view online courses	Satisfied
28	Need to view study materials	Satisfied
29	Need to view interview videos	Satisfied
30	Need to View industry trends	Satisfied

Table 4.18: Product Backlog Review (Sprint3)

User story ID	Comments from Scrum master if any	Comments from Product Owner if any
31	Need to suggest college trends	Satisfied
32	Need to send complaint	Satisfied
33	Need to view profile	Satisfied
34	Need to add and manage study materials	Satisfied
35	Need to add and manage interview videos	Satisfied
36	Need to add industry trends	Satisfied
37	Need to add and manage online courses	Satisfied
38	Need to view notifications	Satisfied

Table 4.19: Product Backlog Review (Sprint4)

User story ID	**Comments from Scrum master if any**	**Comments from Product Owner if any**
1	Need to login and manage expert,college,agency and user	Satisfied
2	Need to add and manage expert	Satisfied
3	Need to verify user	Satisfied
4	Need to send notification	Satisfied
5	Need to add and manage agency	Satisfied
6	Need to view complaint and send reply	Satisfied

Table 4.20: Product Backlog Review (Sprint5)

User story ID	**Comments from Scrum master if any**	**Comments from Product Owner if any**
7	Need to view profile	Satisfied
8	Need to add and manage jobs	Satisfied
9	Need to add& manage test	Satisfied
10	Need to verify job request	Satisfied
11	Need to add & manage interview info	Satisfied
12	Need to add placement details	Satisfied

Table 4.21: Product Backlog Review (Sprint6)

4.7 Sprint Review

In Agile methodology, the Sprint Review is a crucial event where the development team showcases the work completed during the sprint to stakeholders. It's an opportunity for collaboration, feedback, and transparency. During the review, stakeholders provide input, clarify requirements, and suggest adjustments. This fosters alignment between the team and stakeholders, ensuring that the product meets expectations and remains on track. Ultimately, the Sprint Review facilitates continuous improvement and empowers teams to deliver value with each iteration.

User story ID	**Comments from Scrum master if any**	**Comments from Product Owner if any**
13	Successfully added & managed shortlist	Satisfied
14	Successfully viewed notifications	Satisfied
15	Successfully viewed job details & forward	Satisfied
16	Successfully viewed placement details	Satisfied
17	Successfully viewed shortlist	Satisfied

Table 4.22: Sprint Review (Sprint1)

User story ID	**Comments from Scrum master if any**	**Comments from Product Owner if any**
18	Successfully viewed notifications	Satisfied
19	Successfully added & managed admission details	Satisfied
20	Successfully viewed student requests	Satisfied
20	Successfully viewed admission history	Satisfied
22	Successfully registered and logined	Satisfied
23	Successfully viewed jobs	Satisfied

Table 4.23: Sprint Review (Sprint2)

User story ID	Comments from Scrum master if any	Comments from Product Owner if any
24	Successfully viewed short list	Satisfied
25	Successfully viewed interview info	Satisfied
26	Successfully viewed placement details	Satisfied
27	Successfully viewed online courses	Satisfied
28	Successfully viewed study materials	Satisfied
29	Successfully viewed interview videos	Satisfied
30	Successfully Viewed industry trends	Satisfied

Table 4.24: Sprint Review (Sprint3)

User story ID	Comments from Scrum master if any	Comments from Product Owner if any
31	Successfully suggested college trends	Satisfied
32	Successfully sended complaint	Satisfied
33	Successfully viewed profile	Satisfied
34	Successfully added and managed study materials	Satisfied
35	Successfully added and managed interview videos	Satisfied
36	Successfully added industry trends	Satisfied
37	Successfully added and managed online courses	Satisfied
38	Successfully viewed notifications	Satisfied

Table 4.25: Sprint Review (Sprint4)

User story ID	Comments from Scrum master if any	Comments from Product Owner if any
1	Successfully login and manage expert,college,agency and user	Satisfied
2	Successfully added and managed expert	Satisfied
3	Successfully verify user	Satisfied
4	Successfully send notification	Satisfied
5	Successfully added and managed agency	Satisfied
6	Successfully view complaint and send reply	Satisfied

Table 4.26: Sprint Review(Sprint5)

User story ID	Comments from Scrum master if any	Comments from Product Owner if any
7	Successfully view profile	Satisfied
8	Successfully added and managed jobs	Satisfied
9	Successfully added& managed test	Satisfied
10	Successfully verified job request	Satisfied
11	Successfully added & managed interview info	Satisfied
12	Successfully added placement details	Satisfied

Table 4.27: Sprint Review (Sprint6)

4.8 Testing and Validation

In Agile, Testing and Validation are integral parts of the development process, ensuring product quality through continuous testing and feedback loops. By incorporating various testing activities throughout the development cycle, Agile teams can identify and address issues early, delivering reliable software that meets customer expectations and drives project success.

Test #	**Date**	**Action**	**Expected Result**	**Actual Result**	**Pass? < Yes/No >**
13	04/02/24	Add & manage shortlist	Should complete	Done	Yes
14	05/02/24	View notifications	Should Complete	Done	Yes
15	06/02/24	View job details & forward	Should Finish	Done	Yes
16	10/02/24	View placement details	Should Finish	Done	Yes
17	11/02/24	View shortlist	Should Finish	Done	Yes

Table 4.28: Testing and Validation (Sprint1)

Test #	**Date**	**Action**	**Expected Result**	**Actual Result**	**Pass? < Yes/No >**
18	16/02/24	View notifications	Should Finish	Done	Yes
19	18/02/24	Add & manage admission details	Should Finish	Done	Yes
20	19/02/24	View student requests	Should Finish	Done	Yes
21	20/02/24	View admission history	Should Finish	Done	Yes
22	23/02/24	Register and login	Should Finish	Done	Yes
23	24/02/24	View jobs & apply	Should Finish	Done	Yes

Table 4.29: Testing and Validation (Sprint2)

Test #	**Date**	**Action**	**Expected Result**	**Actual Result**	**Pass? < Yes/No >**
24 Yes	26/02/24	User	View short list	Should Complete	Done
25 Yes	27/02/24	User	View interview info	Should Complete	Done
26	28/02/24	View placement details	Should Complete	Done	Yes
27	1/03/24	View online courses	Should Complete	Done	Yes
28	02/03/24	View study materials	Should Complete	Done	Yes
29	05/03/24	View interview videos	Should Complete	Done	Yes
30	09/03/24	View industry trends	Should Complete	Done	Yes

Table 4.30: Testing and Validation (Sprint3)

Test #	**Date**	**Action**	**Expected Result**	**Actual Result**	**Pass? < Yes/No >**
31	12/03/24	Suggest college	Should Complete	Done	Yes
32	17/03/24	Send complaint & View reply	Should Complete	Done	Yes
33	18/03/24	View profile	Should Complete	Done	Yes
34	19/03/24	Add and manage study materials	Should Complete	Done	Yes
35	20/03/24	Add and manage interview videos	Should Complete	Done	Yes
36	21/03/24	Add industry trends	Should Complete	Done	Yes
37	22/03/24	Add and manage online courses	Should Complete	Done	Yes
38	23/03/24	View notifications	Should Complete	Done	Yes

Table 4.31: Testing and Validation (Sprint4)

Test #	**Date**	**Action**	**Expected Result**	**Actual Result**	**Pass? < Yes/No >**
1	27/03/24	Login and manage each modules	Should predict the college	Collected	Yes
2	26/03/24	Add and manage expert	Should clean dataset files	Done	Yes
3	27/04/24	Verify user	Building	Done	Yes
4	03/04/24	Send notification	Should Complete	Done	Yes
5	04/04/24	Add and manage agency	Should Complete	Done	Yes
6	05/04/24	View complaint and send reply	Should Complete	Done	Yes

Table 4.32: Testing and Validation (Sprint5)

Test #	**Date**	**Action**	**Expected Result**	**Actual Result**	**Pass? < Yes/No >**
7	09/04/24	View profile	Should Save	Saved	Yes
8	10/04/24	Add and manage jobs	Should complete	Done	Yes
9	11/04/24	Add& manage test Verify job request	Should predict the correct result	Completed	Yes
10	12/04/24	Verify job request	Should predict the correct result	Completed	Yes
11	13/04/24	Add & manage interview info	Should predict the correct result	Completed	Yes
12	14/04/24	Add placement details	Should predict the correct result	Completed	Yes

Table 4.33: Testing and Validation (Sprint6)

4.9 Git

Git is a free and open source distributed version control system designed to handle everything from small to very large projects with speed and efficiency. To show the continuous development of the project the Gitlab histories are shown in Appendix Section C.

Chapter 5

Conclusion

In conclusion, the Career Guidance and College Admission System (CGCAPS) represents a significant advancement in the field of higher education and career planning. Through its innovative approach and user-centric design, CGCAPS addresses the complexities and challenges faced by students during the college admission process. By integrating comprehensive college guidance with advanced admission chance prediction algorithms, CGCAPS empowers students to make informed decisions about their educational and career paths. The system provides personalized recommendations, valuable insights, and a seamless user experience, enhancing the overall higher education journey for students. Moreover, CGCAPS contributes to students' long-term success by facilitating placements and aligning their college choices with their career aspirations. As technology continues to play a pivotal role in shaping the future of education, CGCAPS exemplifies the importance of leveraging technological solutions to streamline and enhance the college admission process. Moving forward, CGCAPS will continue to evolve and adapt to meet the changing needs of students, ensuring that they have the support and resources necessary to achieve their academic and career goals effectively.

Bibliography

1. Hiebert, B. S., Collins, S., & Robinson, J. (2001). Needs assessment for program planning and program development: A brief review. The Alberta Counselor, 26(1), 11-19.
2. Holland, J. L. (1992). Making vocational choices (2nd ed.). Odessa, FL: Psychological Assessment Resources.
3. Manuel, A. M.,& Asuquo, P. N. (2009). Near-school leavers' perception of their vocational and labour
4. market information needs. Stud Home Comm. Sci., 3(2), 135-142.
5. Parson, F. (1909). Choosing a vocation. In R. S. Sharp (2006), Applying career development theory to counseling. Belmont, CA: Wadsworth.
6. Zhenru Wang , Yijie Shi Prediction of the Admission Lines of College Entrance Examination based on Machine Learning
7. 2nd IEEE Interna-tional Conference on Computer and Communications , p. 332 - 335 Posted: 2016 Abdul Hamid , M Ragab , Abdul Fatah , S Mashat , Ahmed M Khedra Hybrid Recommender System for Predicting College Admission

Appendix A

Source Code

```
    import email

from django.db import models

# Create your models here.
class login_table(models.Model):
    username=models.CharField(max_length=100)
    password=models.CharField(max_length=100)
    type= models.CharField(max_length=100)

class user_table(models.Model):
    login=models.ForeignKey(login_table,on_delete=models.\\ CASCADE)
    firstname = models.CharField(max_length=100)
    lastname = models.CharField(max_length=100)
    dob=models.DateField()
    gender=models.CharField(max_length=25)
    place= models.CharField(max_length=100)
    post= models.CharField(max_length=100)
    phoneno=models.BigIntegerField()
    pin=models.BigIntegerField()
    email= models.CharField(max_length=100)
    photo=models.FileField()
    rank = models.CharField(max_length=50)
    mark = models.CharField(max_length=50)
```

```
class expert_table(models.Model):
    login = models.ForeignKey(login_table, on_delete=models.CASCADE)
    firstname = models.CharField(max_length=100)
    lastname = models.CharField(max_length=100)
    dob = models.DateField()
    gender = models.CharField(max_length=25)
    place = models.CharField(max_length=100)
    post = models.CharField(max_length=100)
    pin = models.IntegerField()
    phoneno = models.BigIntegerField()
    email = models.CharField(max_length=100)
    photo = models.FileField()

class online_course_table(models.Model):
    expert= models.ForeignKey(expert_table, on_delete=models.CASCADE)
    course = models.CharField(max_length=100)
    details= models.CharField(max_length=100)
    duration = models.CharField(max_length=100)
    fee= models.BigIntegerField()
    date = models.DateField()

class notification_table(models.Model):
    notification = models.CharField(max_length=100)
    date = models.DateField()

class complaint_table(models.Model):
    user= models.ForeignKey(user_table, on_delete=models.CASCADE)
    complaint = models.CharField(max_length=100)
    date = models.DateField()
    reply= models.CharField(max_length=100)

class study_materials_table(models.Model):
    expert= models.ForeignKey(expert_table,

    on_delete=models.CASCADE)
    COURSE = models.ForeignKey
```

```
    (online_course_table, on_delete=models.CASCADE)
    studymaterials= models.CharField(max_length=100)
    file= models.FileField()
    details= models.CharField(max_length=100)

class tips_table(models.Model):
    expert = models.ForeignKey(expert_table, on_delete=models.CASCADE)
    tips= models.CharField(max_length=100)
    details = models.CharField(max_length=100)

class interview_vedios_table(models.Model):
    expert= models.ForeignKey(expert_table, on_delete=models.CASCADE)
    date = models.DateField()
    vedio= models.FileField()
    details= models.CharField(max_length=100)

class trends_in_table(models.Model):
    expert= models.ForeignKey(expert_table, on_delete=models.CASCADE)
    date = models.DateField()
    trends= models.CharField(max_length=100)
    details = models.CharField(max_length=100)

class agency_table(models.Model):
    login = models.ForeignKey(login_table, on_delete=models.CASCADE)
    agencyname = models.CharField(max_length=100)
    place = models.CharField(max_length=100)
    photo = models.FileField()
    post = models.CharField(max_length=100)
    phoneno = models.BigIntegerField()
    pin = models.BigIntegerField()
    email = models.CharField(max_length=100)


class job_table(models.Model):
    agency= models.ForeignKey(agency_table, on_delete=models.CASCADE)
    job = models.CharField(max_length=100)
    requirements= models.CharField(max_length=100)
    jobdetails = models.CharField(max_length=100)
```

```
    vaccancy=models.CharField(max_length=100)
    date = models.DateField()

class test_table(models.Model):
    job= models.ForeignKey(job_table, on_delete=models.

    CASCADE)
    question= models.CharField(max_length=100)
    answers= models.CharField(max_length=100)
    option1 = models.CharField(max_length=100)
    option2 = models.CharField(max_length=100)
    option3 = models.CharField(max_length=100)
    option4 = models.CharField(max_length=100)


class jobrequest_table(models.Model):
    job= models.ForeignKey(job_table,


    on_delete=models.
    CASCADE)
    user = models.ForeignKey(user_table, on_delete=models.

    CASCADE)
    status= models.CharField(max_length=100)
    resume = models.CharField(max_length=100)
    date = models.DateField()
    time = models.CharField(max_length=100)


class interview_info_table(models.Model):
    jobrequest= models.ForeignKey(jobrequest_table,

    on_delete=models.CASCADE)
    place= models.CharField(max_length=100)
    status = models.CharField(max_length=100)
    date = models.DateField()
```

```
class attend_exam_table(models.Model):
    question= models.ForeignKey(test_table, on_delete=models.CASCADE)
    answers= models.CharField(max_length=100)
    user = models.ForeignKey(user_table, on_delete=models.\\CASCADE)
    marks= models.CharField(max_length=100)
    date = models.DateField()


class college_table(models.Model):
    login = models.ForeignKey(login_table,


    on_delete=models.CASCADE)
    collegename = models.CharField(max_length=100)
    place = models.CharField(max_length=100)
    post = models.CharField(max_length=100)
    phoneno = models.BigIntegerField()
    pin = models.BigIntegerField()
    email = models.CharField(max_length=100)


class course_details(models.Model):
    course= models.CharField(max_length=100)
    department= models.CharField(max_length=100)
    duration = models.CharField(max_length=100)


class addmission_details_table(models.Model):
    college=models.ForeignKey(college_table,on_delete=models.

    \\CASCADE)
    courses=models.ForeignKey(course_details,
    on_delete=models.  CASCADE)
    rank= models.CharField(max_length=100)
    type = models.CharField(max_length=100)
    marks= models.CharField(max_length=100)
    year=models.IntegerField()
```

```
class CollegeRequest(models.Model):
    ADMISSION=models.ForeignKey(addmission_details_table,


    on_delete=models.CASCADE)
    USER=models.ForeignKey(user_table,on_delete=models
    .CASCADE)
    date = models.DateField()
    status = models.CharField(max_length=20)
```

Appendix B

Output

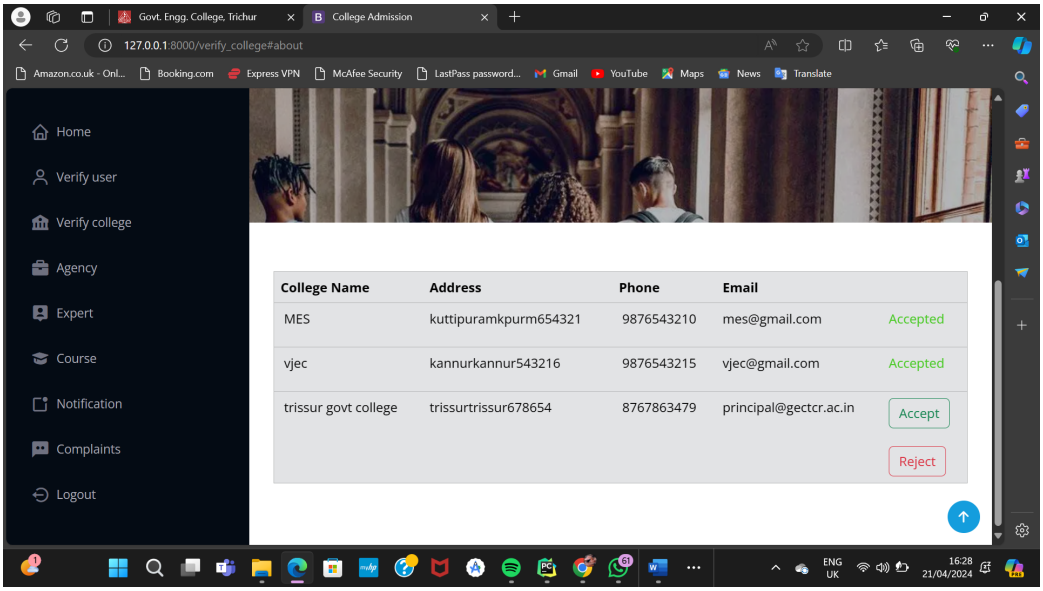

Figure B.1: Admin view & verify college

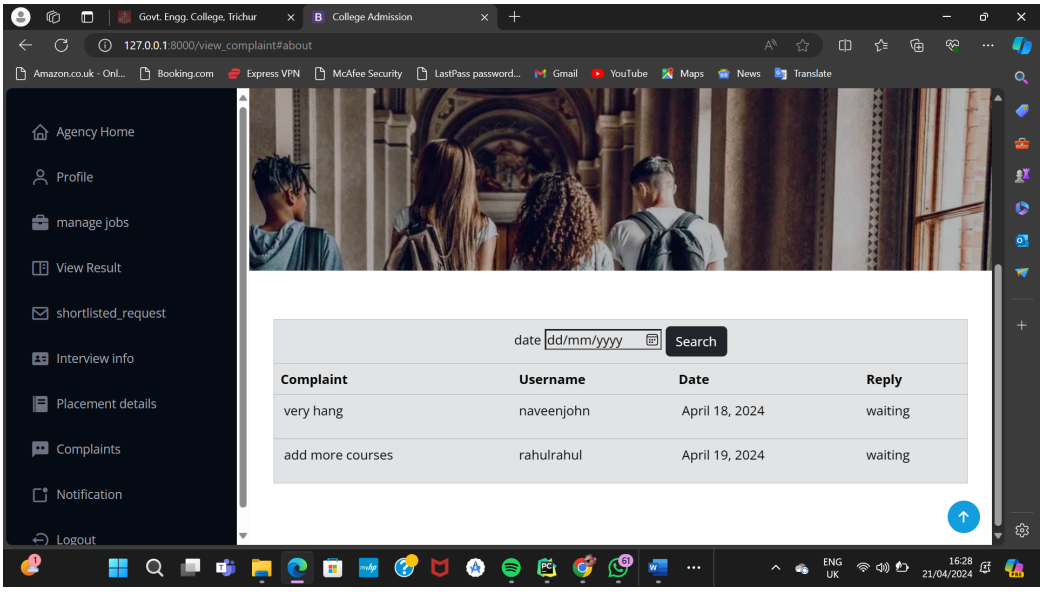

Figure B.2: agency view with complaints

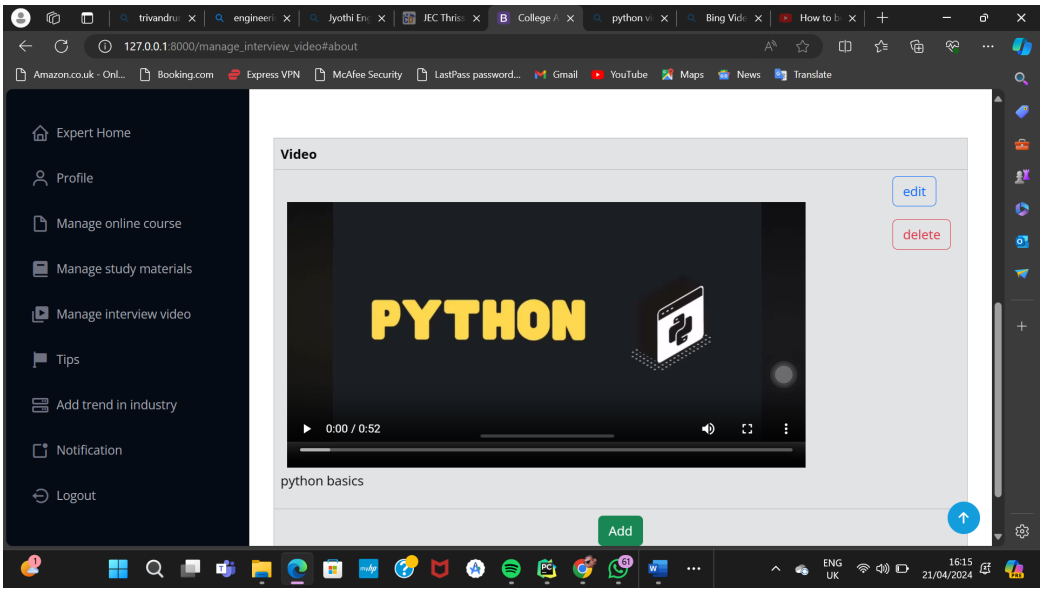

Figure B.3: expert view with interview vedio

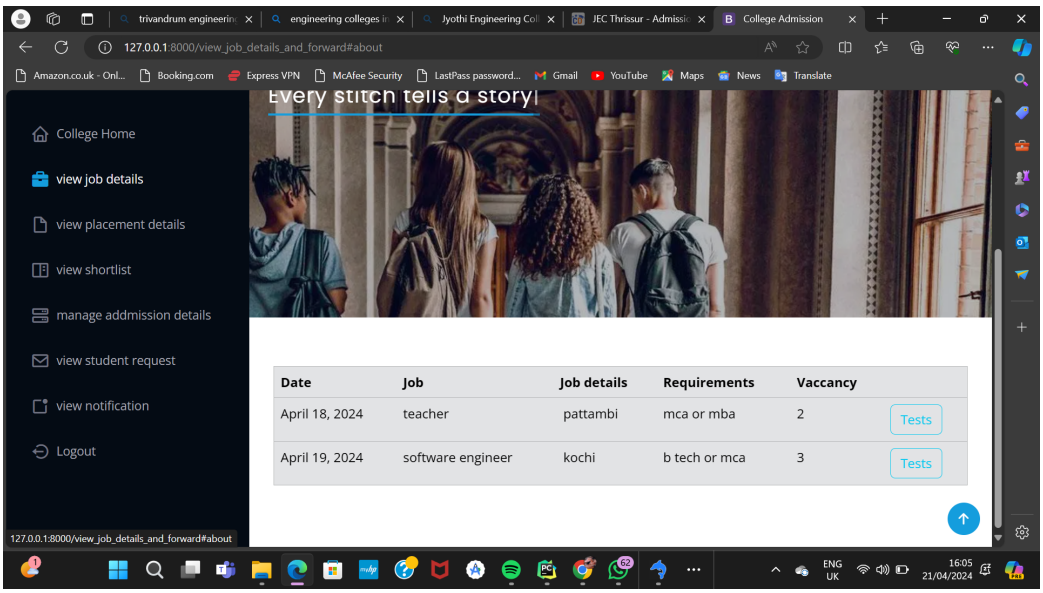

Figure B.4: college view with view job details

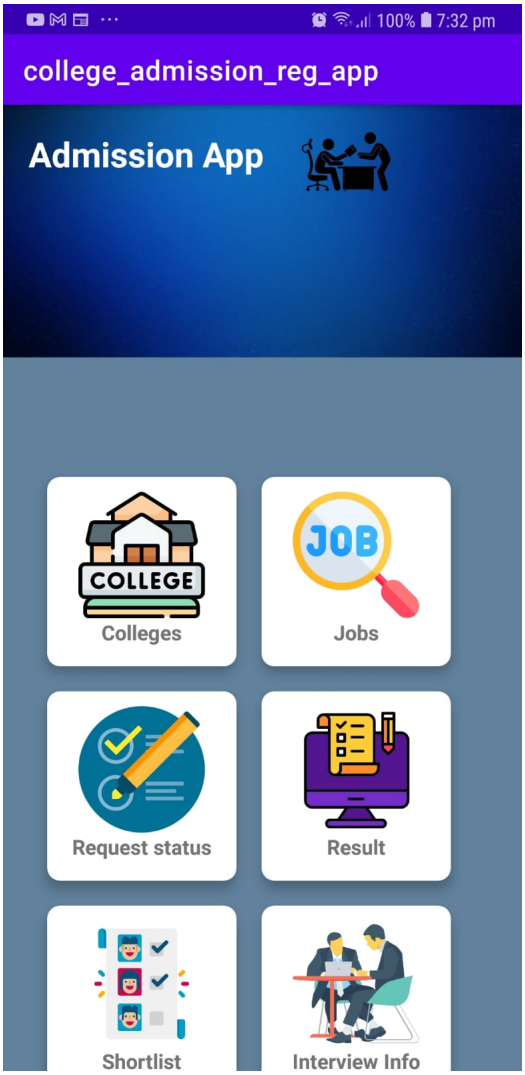

Figure B.5: android home page

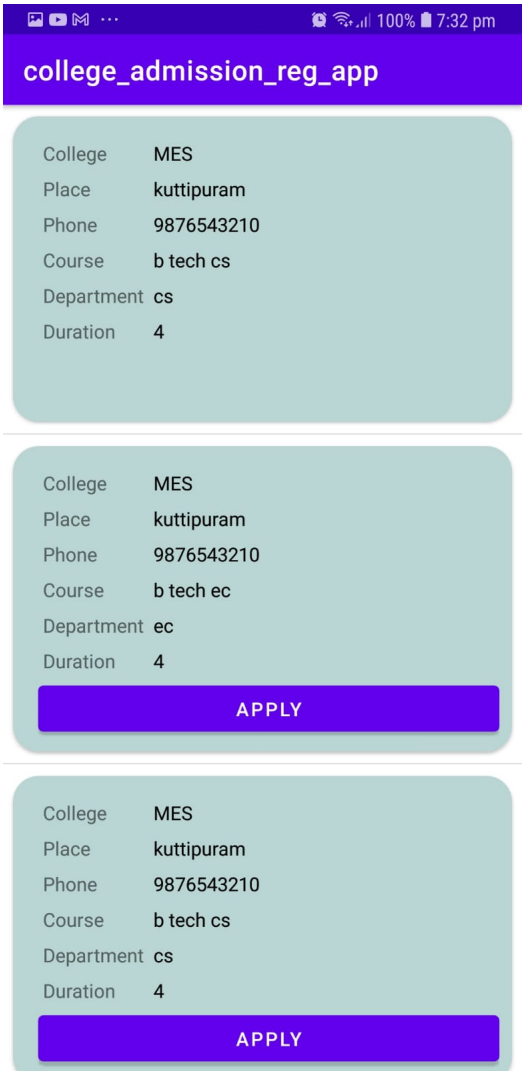

Figure B.6: predicting college to user

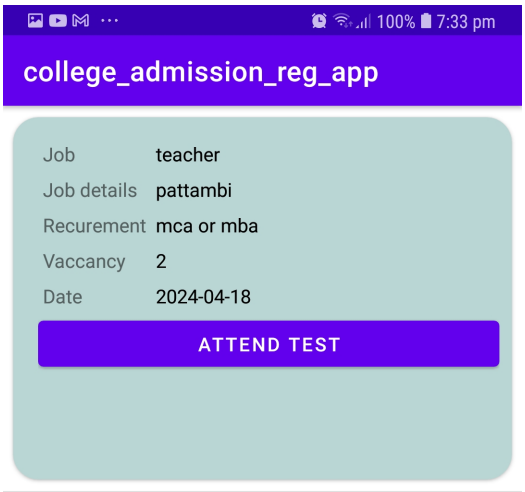

Figure B.7: attend test to interview

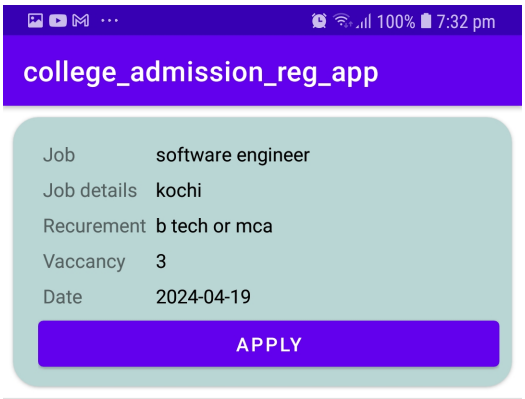

Figure B.8: job vacancy

Appendix C

Git History

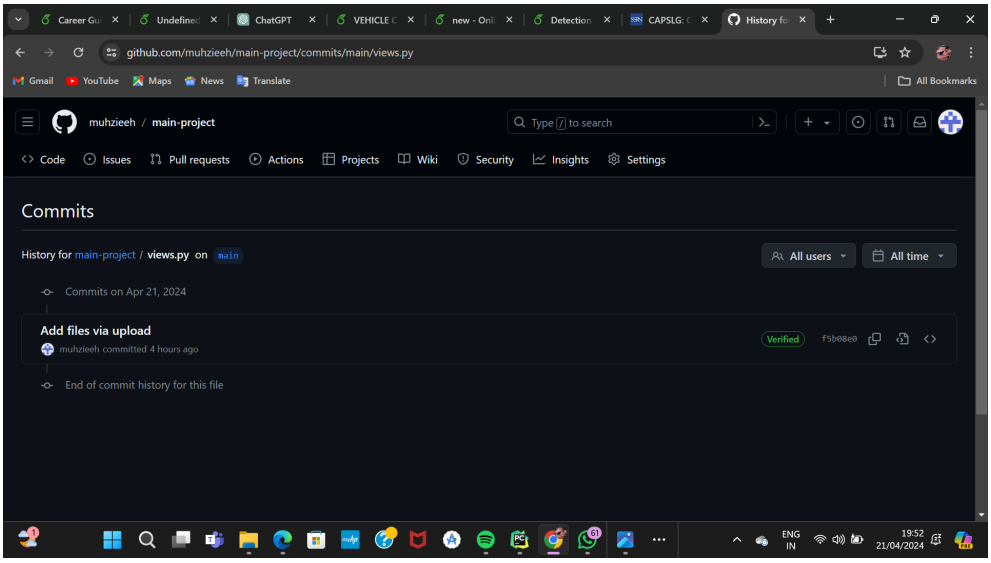

Figure C.1: Git history of commits 1.1

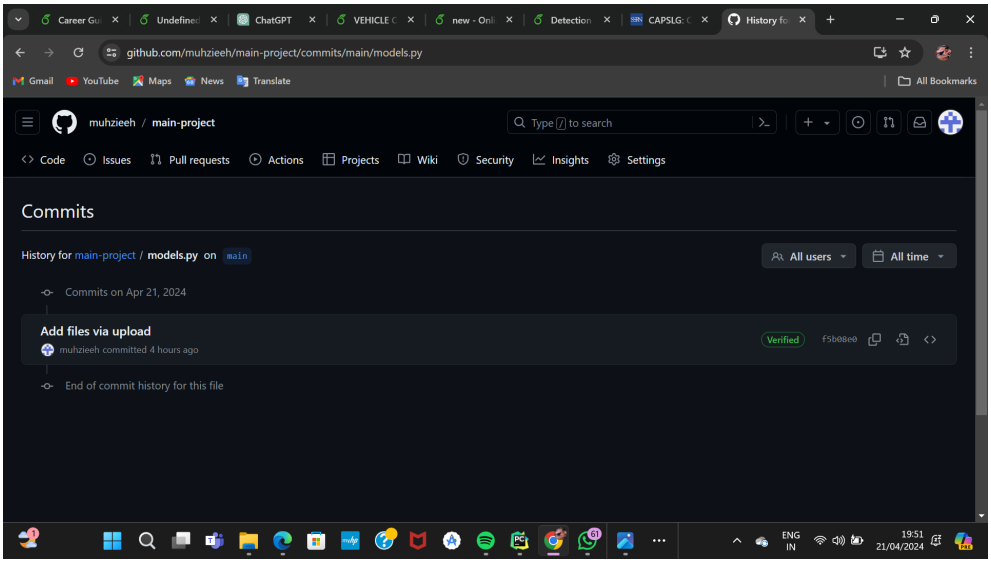

Figure C.2: Git history of commits 1.2

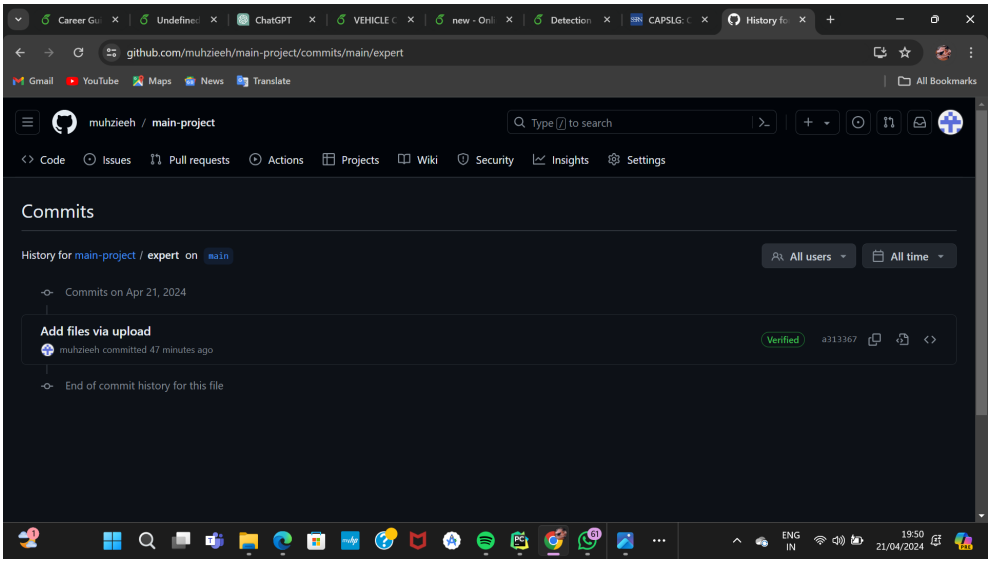

Figure C.3: Git history of commits 1.3

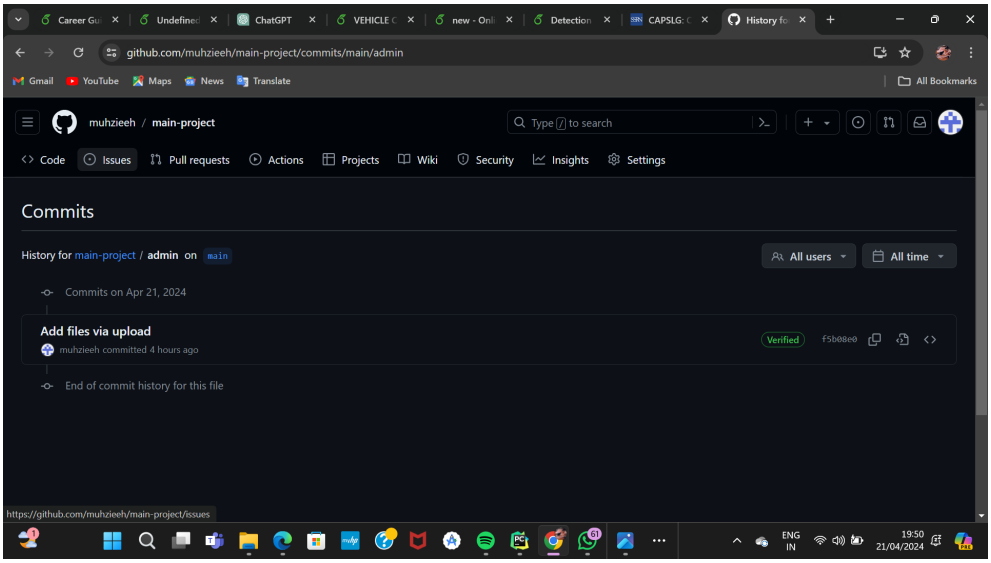

Figure C.4: Git history of commits 2.1

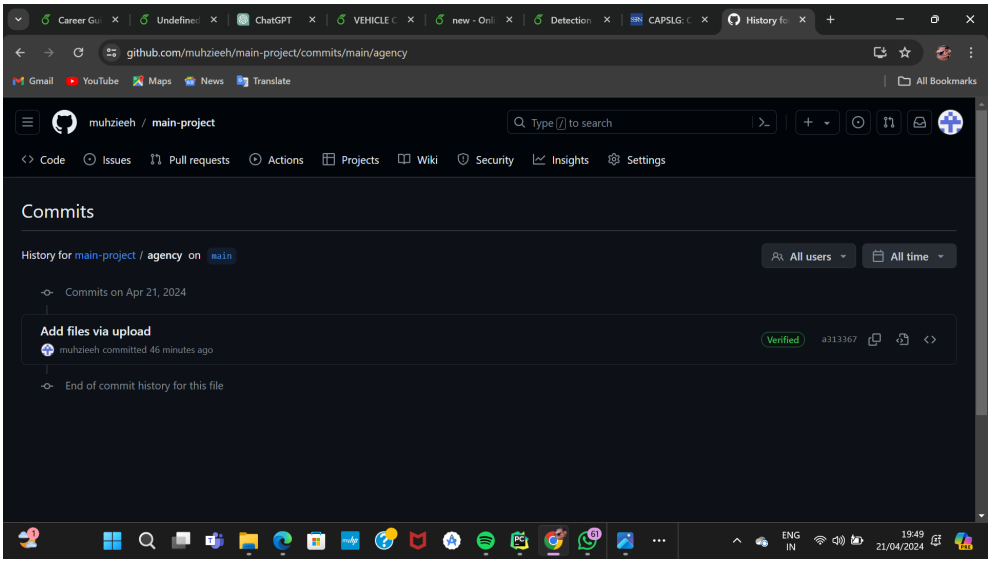

Figure C.5: Git history of commits 2.2