ENGINE HEALTH MONITORING BY VIBRATION ANALYSIS

PRESENTATION BY: KASHISH JENA

WHAT IS VIBRATION?

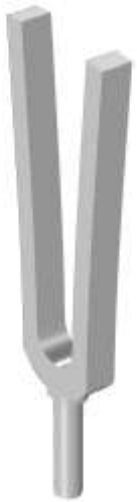

Back and forth movement of any object

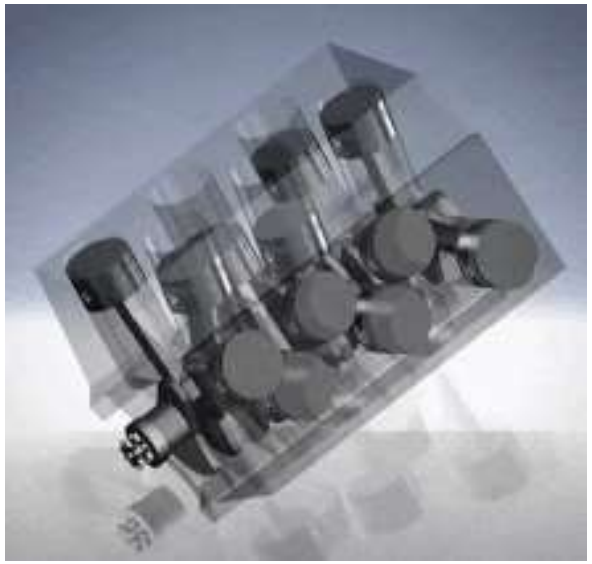

In industrial machining

1. Some vibrations are useful.
2. Unintended vibrations reduce machine's lifespan.

DESCRIPTORS OF VIBRATION

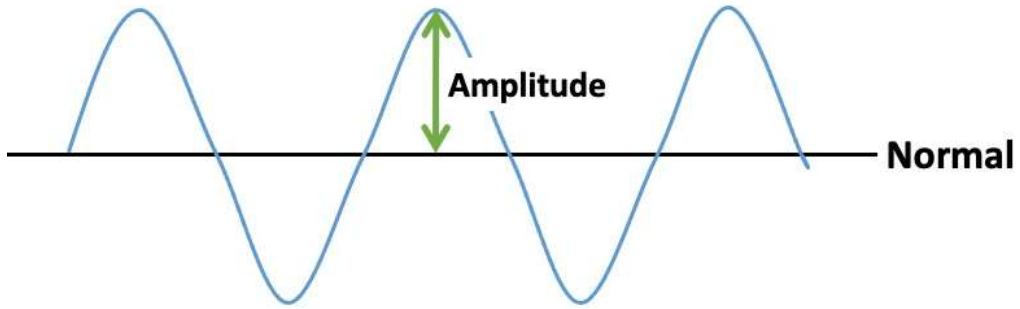

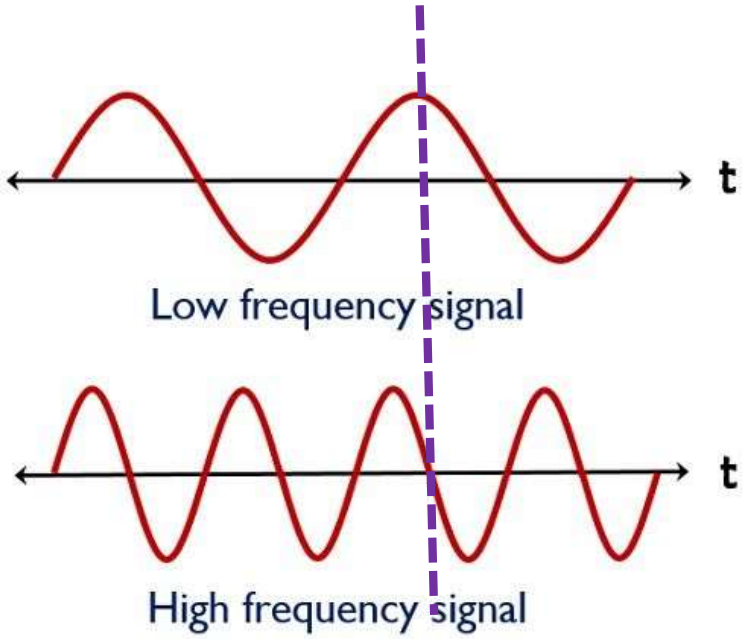

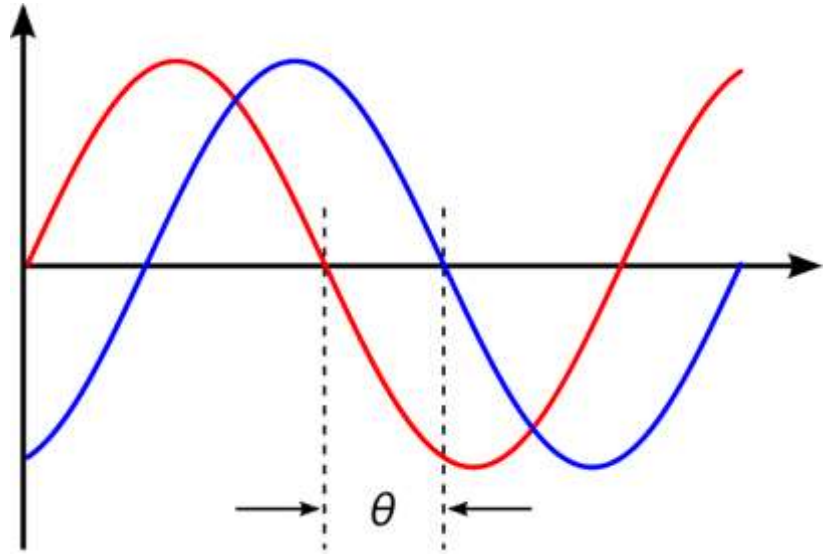

Circuit Globe

CAUSES OF VIBRATION IN ENGINE

REPEATING FORCES

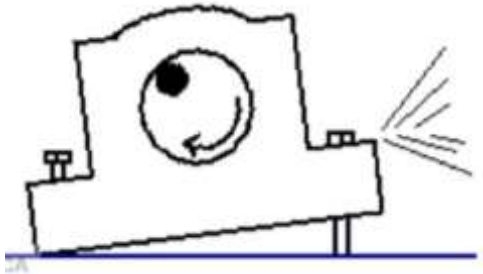

MECHANICAL LOOSENESS

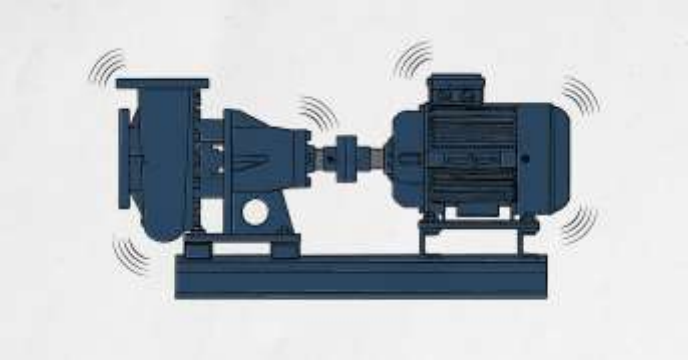

RESONANCE

VIBRATIONAL ANALYSIS

1. It is a type of conditional monitoring.

- It is a form of predictive monitoring.
- Machine parameters such as temperature or pressure are measured.

2. Used to identify potential faults.

- Reduces downtime.
- Increases safety of workers.
- Prevents replacement of good parts.

EQUIPMENTS USED FOR VIBRATION ANALYSIS

VIBRATION METER

ACCELERATION SENSOR

Vibration sensor
Magnetic base
Cable
Vibration meter (analyzer)

VIBRATION METER AND ITS WORKING

1. Voltage is transferred to the meter via a cable

2. Analyser shows vibration values in form of acceleration and velocity.

ACCELERATION SENSOR AND WORKING

Piezoelectric acceleration sensor

Commonly used acceleration sensor

Pressure type

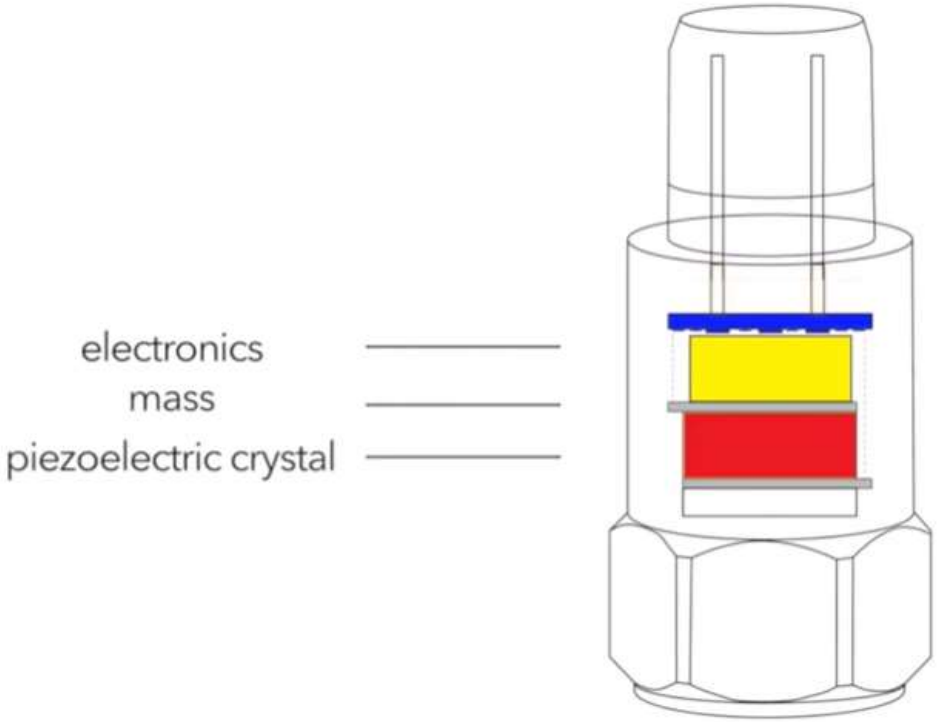

WORKING OF THE EQUIPMENTS

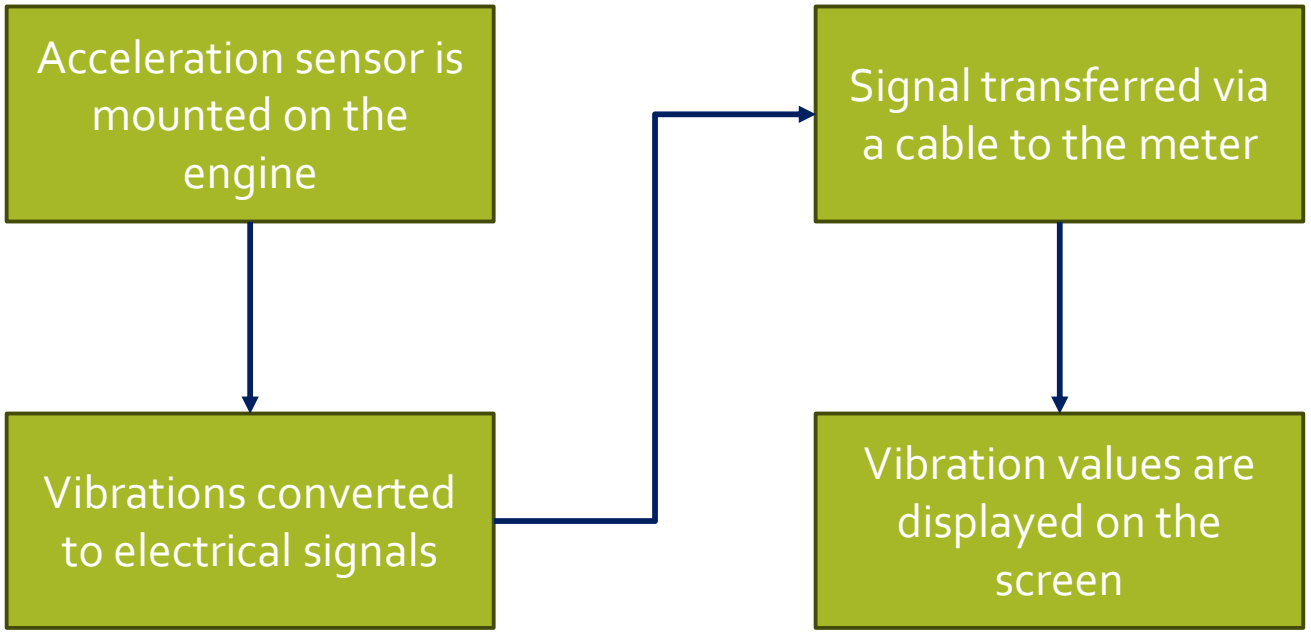

HOW TO PREPARE THE MEASURING POINT

1. Connect the measurement pad to the appropriate place using a special glue.

2. Acceleration sensor has a special neodymium base.

3. Clean the machine surface before attaching the measuring pad.

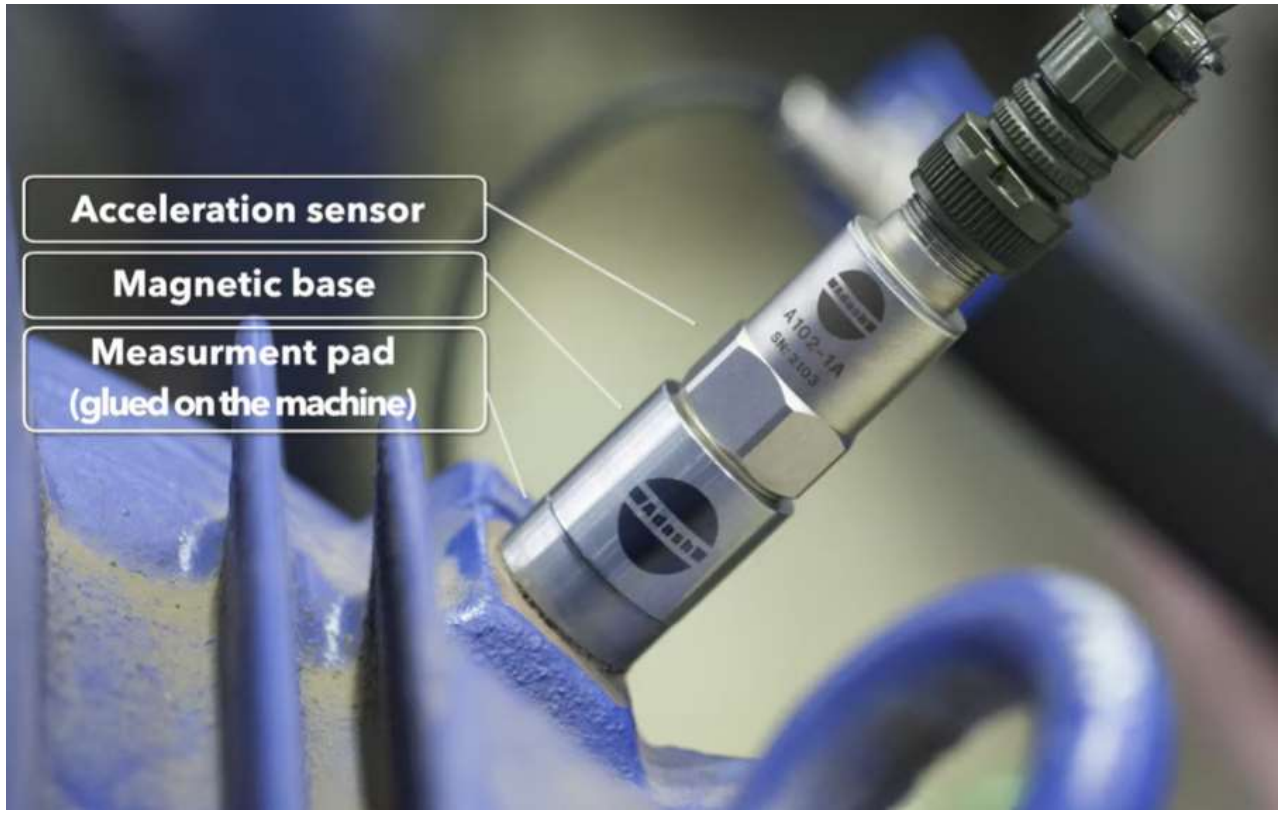

WHERE SHOULD THE SENSOR BE MOUNTED IN CASE OF AN SI ENGINE?

- Cylinder head(top/side)
- Engine head(mid section)
- Bearing housing/crankshaft areas

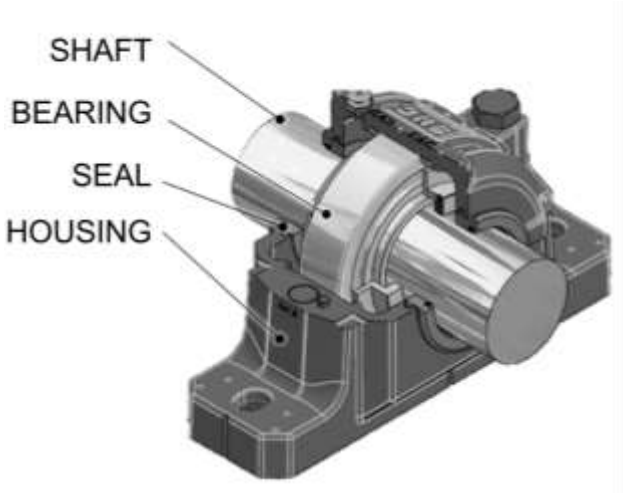

HOW TO IDENTIFY THE TYPE OF FAULT

Overall machine condition related to shaft speed
LOW FREQUENCY

1. Unbalance
2. Mechanical Looseness
3. Misalignment

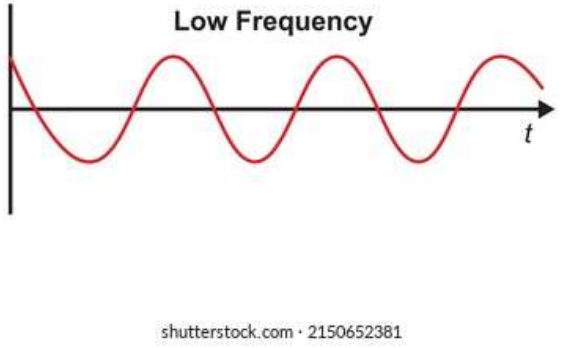

Bearing condition/ gearbox fault
HIGHER FREQUENCY

1. Bearing faults
2. Gear faults

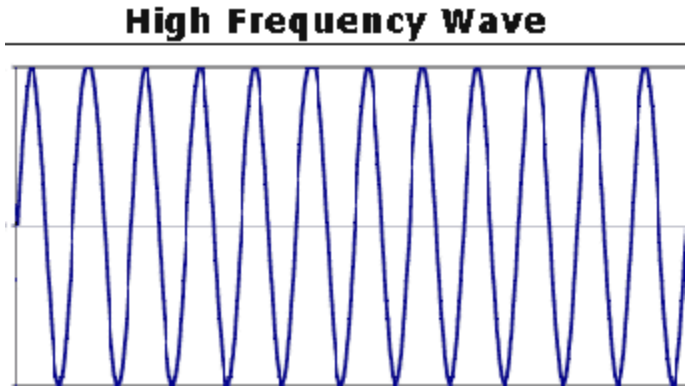

BASIC MEASUREMENTS

1. Low frequency vibrations are measured in VELOCITY.
   FREQUENCY RANGE: 10-1000Hz

2. High frequency vibrations are measured in ACCELERATION.
   FREQUENCY RANGE: 500-16000Hz

3. Limits of general bearing vibrations do not exist.

WAYS TO DISPLAY VIBRATIONAL SIGNALS

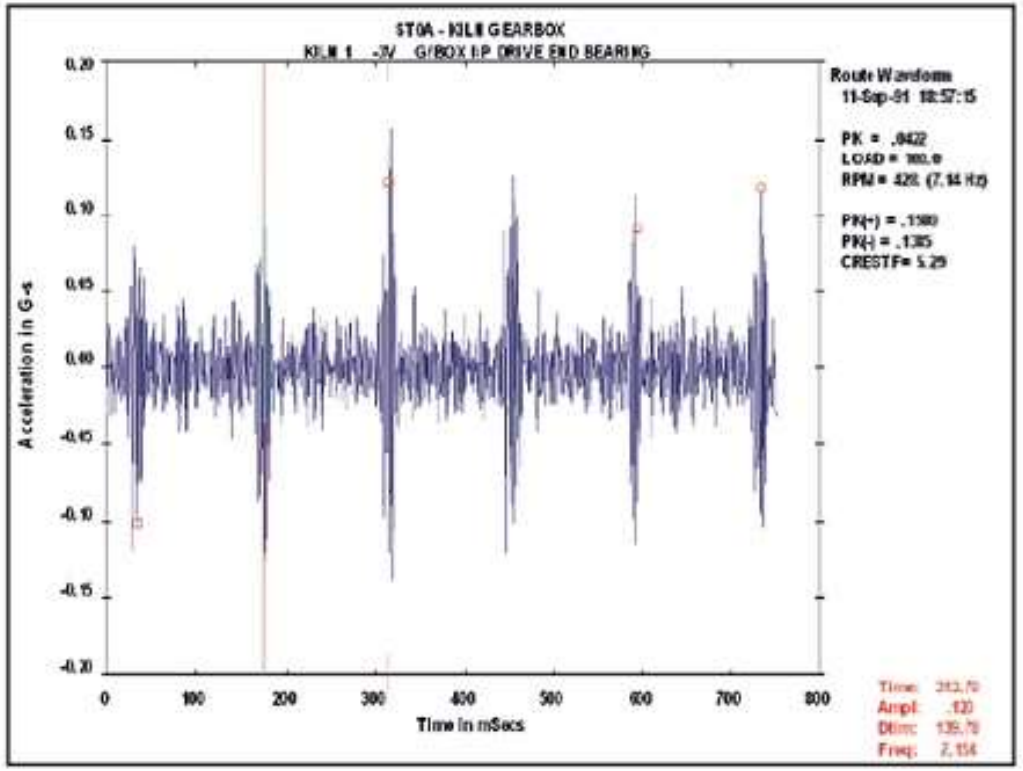

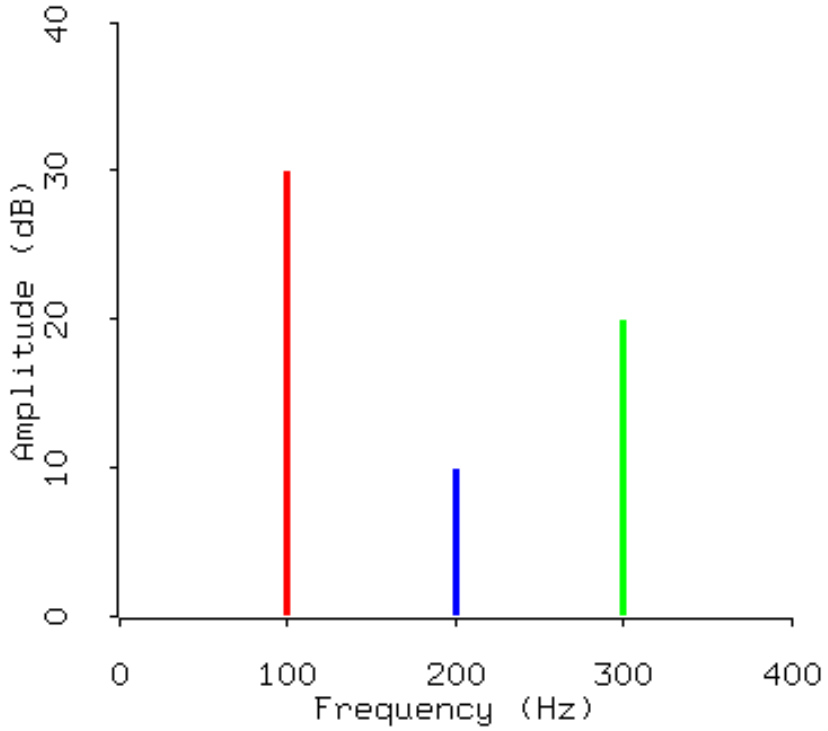

Time waveform

Spectrum of frequency

FAST FOURIER TRANSFORMATION

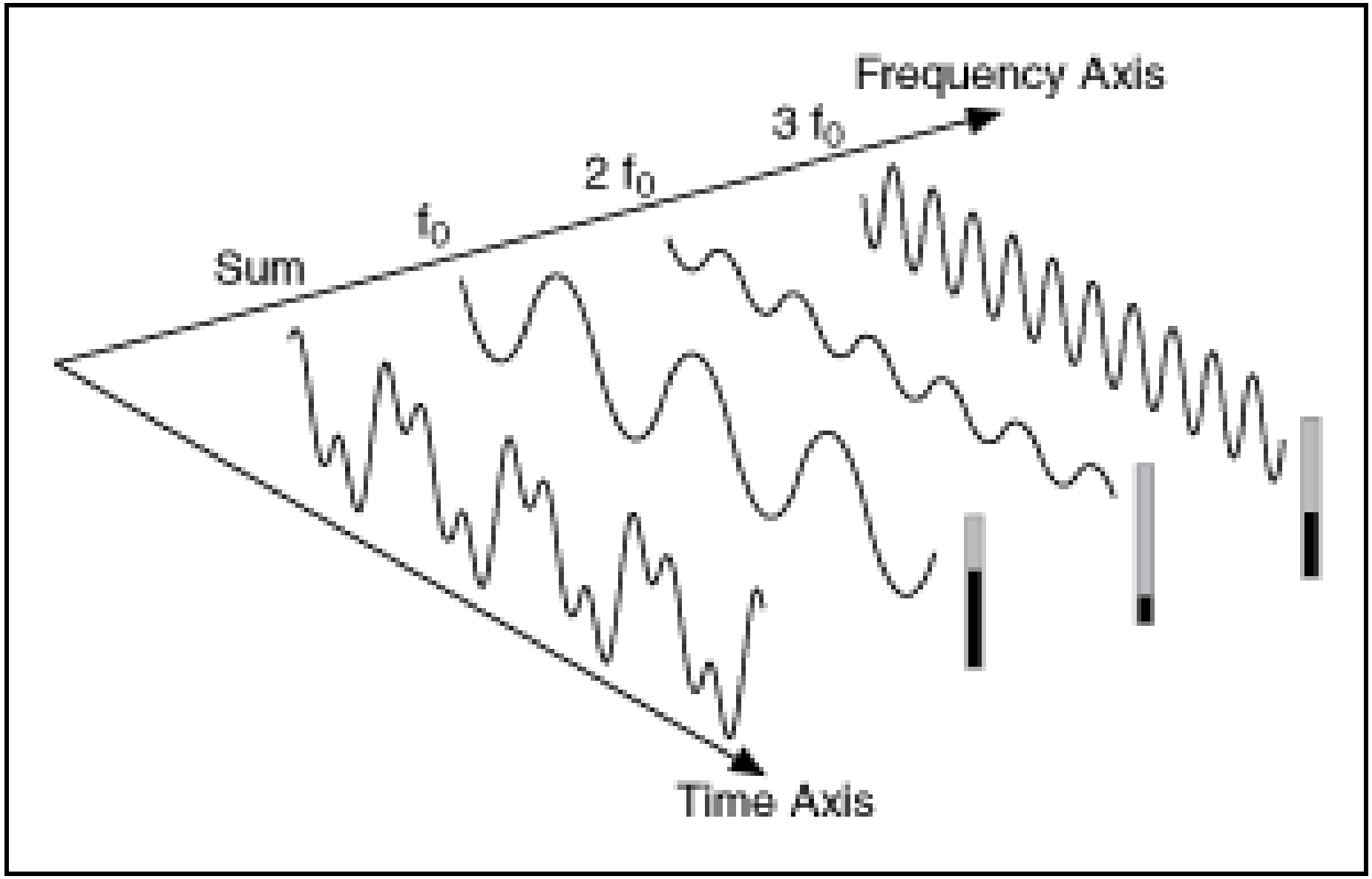
Frequency Axis
3 f0
2 f0
f0
Sum
Time Axis

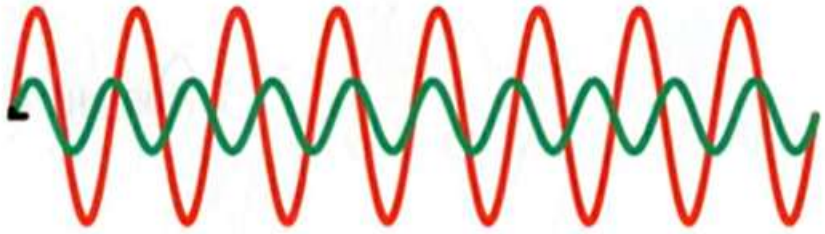

40 Hz 50 Hz

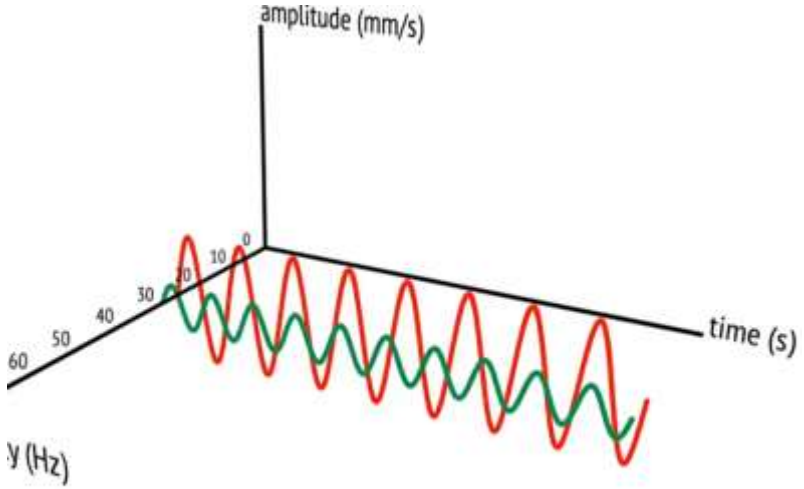

Time Domain View

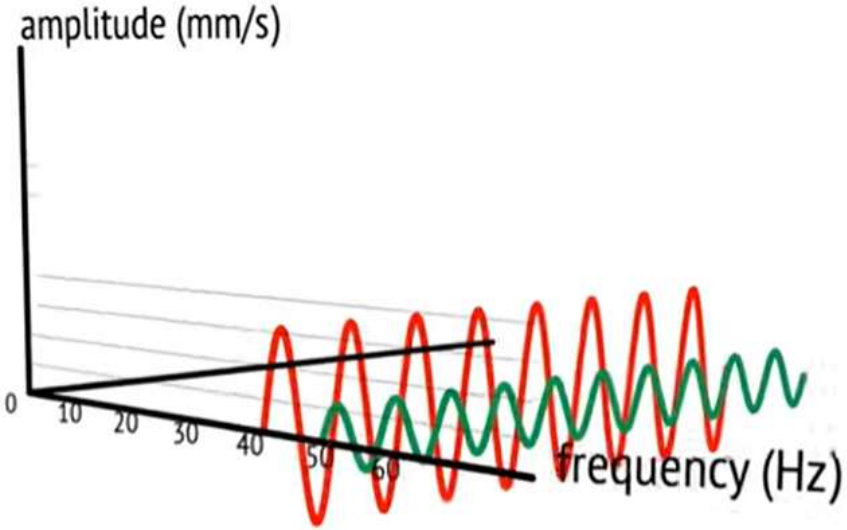

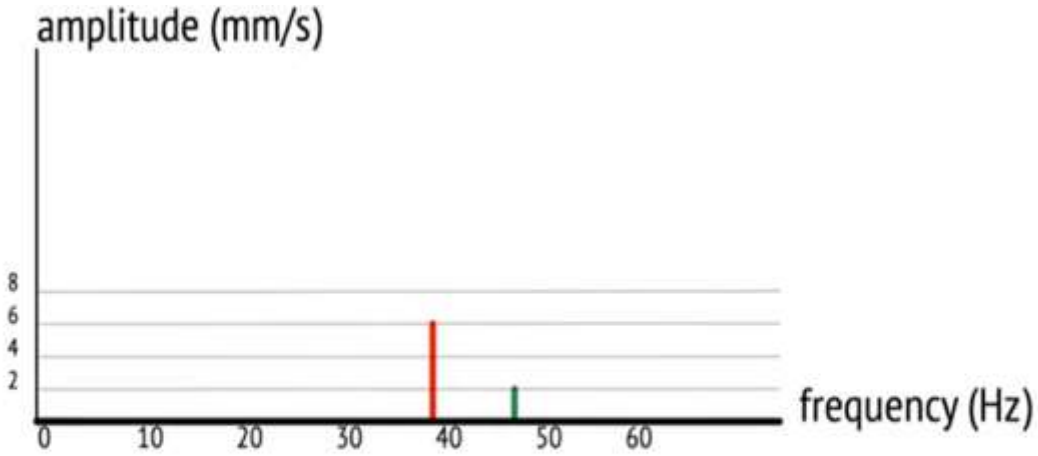

40 Hz 50 Hz
6 mm/s 2 mm/s

SIMULATION

REFERENCES

1. https://drive.google.com/file/d/1E3w-7HMADYRW6WziGsk-rDOMLvi9cXWa/view?usp=sharing
2. https://youtu.be/4fDqII7ut6Y?si=CIuU31i90qrGdOq5
3. https://youtu.be/BPMjYJ_HoWk?si=lCBbG7HWc09KVblH
4. https://youtu.be/QnHl1Le2OXA?si=SkgvxpnFGwG9tIea
5. https://youtu.be/qcHjDLCJxfI?si=RRDlhtlABySuYlQn
6. https://youtu.be/HRjmPeofncA?si=vLawMgQfOZzVWBt7

THANK YOU