Automobile Engineering

To Determine the Brake Horse Power (BHP) vs RPM Curve of a Spark Ignition (SI) Engine at Constant Load Using an Eddy Current Dynamometer

Subject: Automobile Engineering

Course: B.Tech Mechanical Engineering(6th Semester)

Date: February 2026

01 Objectives of the Experiment

1

Determine Brake Horse Power

To determine the **Brake Horse Power (BHP)** of a Spark Ignition engine at various RPM values under constant load conditions using an Eddy Current Dynamometer.

2

Plot BHP vs RPM Curve

To plot the **BHP vs RPM characteristic curve** at constant load and analyze the performance characteristics of the SI engine across its operating speed range.

3

Understand Engine Performance

To understand the **performance characteristics** of spark ignition engines and validate theoretical concepts through practical experimentation.

Key Focus: Understanding the relationship between engine speed and power output under controlled load conditions.

02 Introduction to Spark Ignition (SI) Engine

Definition

A **Spark Ignition (SI) Engine** is an internal combustion engine where the air-fuel mixture is ignited by an electric spark from a **spark plug**.

> **Fuels:** Petrol (Gasoline), CNG, LPG

Working Principle

Operates on the **four-stroke cycle** (Otto Cycle):

- **1. Intake**
- **2. Compression**
- **3. Power**
- **4. Exhaust**

Four-Stroke SI Engine Cycle

Stroke 2: Fuel-air mixture compressed
Stroke 3: Combustion (~constant volume) occurs and product gases expand doing work
Stroke 4: Product gases pushed out of the cylinder through the exhaust valve

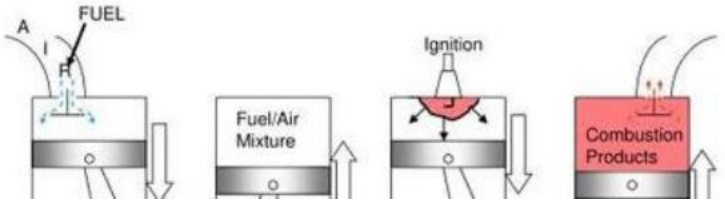

Applications

- Automobiles
- Motorcycles
- Generators
- Power Tools

03 Introduction to Eddy Current Dynamometer

Definition & Purpose

An **Eddy Current Dynamometer** is an electrical absorption type dynamometer used for measuring the **brake power** of engines.

> **Primary Use:** Engine testing laboratories for performance evaluation and power measurement.

Advantages

1. **Good control** at low rotating speeds
2. **Suitable for high speed** range applications
3. **Compact design** compared to other dynamometers
4. **Smooth torque** development under all conditions

Eddy Current Dynamometer Construction

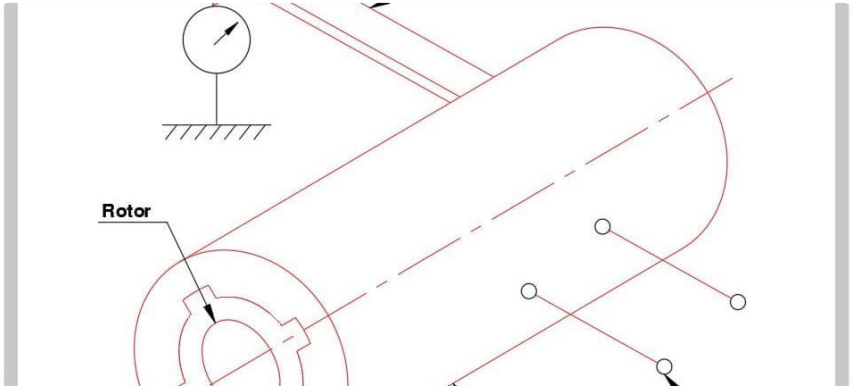

Key Components

- Non-magnetic steel rotor
- Cast iron stator with coils
- Torque arm assembly
- Cooling water system

04 Working Principles

SI Engine Working

1. Intake Stroke

Piston moves down, air-fuel mixture enters through open intake valve.

2. Compression Stroke

Both valves closed, piston compresses mixture (Compression ratio: 8-12:1).

3. Power Stroke

Spark plug ignites mixture → Temperature rises to **~2000°C** → High pressure pushes piston down.

4. Exhaust Stroke

Exhaust valve opens, piston pushes out burnt gases.

Eddy Current Principle

Core Principle

When a **conductor moves through a magnetic field**, it induces eddy currents (local currents) that flow in circular paths.

Working Process

- Stator winding energized by **DC supply**
- Rotor spins in magnetic field → **EMF induced**
- Eddy currents **oppose rotation** (Lenz's Law)
- Braking torque measured by **torque arm**

Energy Dissipation

Mechanical power → Heat (dissipated by air & water cooling)

05 Experimental Setup

Complete Experimental Setup Diagram

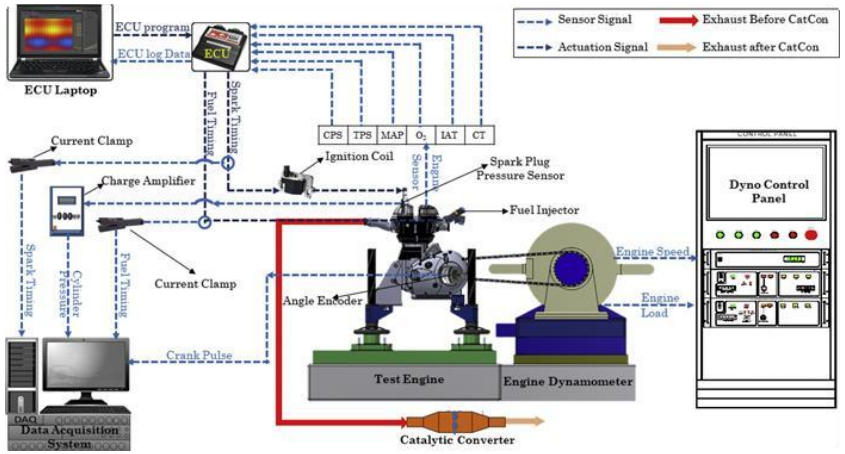

Fig: SI Engine connected to Eddy Current Dynamometer with measurement systems

Setup Components

1. **Spark Ignition Engine**
   Test engine with throttle control
2. **Eddy Current Dynamometer**
   Absorption type with stator & rotor
3. **Coupling Shaft**
   Connects engine to dynamometer
4. **Torque Arm & Spring Balance**
   Measures braking force
5. **RPM Measurement Device**
   Tachometer or digital sensor
6. **Cooling Water System**
   Circulates through dynamometer

Note: Load is controlled by varying the DC excitation current to the dynamometer stator coils.

06 Formulae Used

Brake Power Formula (SI Units)

$$BP = (2\pi NT) / 60$$

Where:

- **N** = Engine Speed (RPM)
- **T** = Torque (N·m)
- **BP** = Brake Power (Watts)

Torque Calculation

$$T = F \times R$$

- **F** = Force (Spring Balance Reading) in Newtons
- **R** = Torque Arm Radius in meters

Alternative Formulas

In Kilowatts (kW)

$$P[kW] = (\pi \times N \times T) / (30{,}000)$$

In Horsepower (HP)

$$BHP = (T \times N) / 5252$$

(T in lb-ft, N in RPM)

Metric Horsepower (PS)

$$PS = (T \times N) / 7127$$

(T in N·m, N in RPM)

Unit Conversions

1 kW = 1000 W	1 HP = 746 W
1 kW = 1.36 HP	1 N = 0.2248 lb

07 Experimental Procedure

1 Pre-Experiment Checks

Check all electrical connections, fuel supply, and ensure **cooling water supply** is active for the dynamometer.

2 Engine Start & Warm-up

Start the engine and allow it to **warm up for 5-10 minutes** to reach steady operating temperature.

3 Set Initial Load

Set the dynamometer to **minimum load** condition by adjusting the DC excitation current to zero or minimum.

4 Adjust Engine Speed

Gradually increase engine speed to the **first test RPM** (e.g., 1500 RPM) using throttle control.

5 Apply Constant Load

Increase dynamometer load to achieve the **desired constant load** condition. Maintain this load throughout.

6 Record Measurements

Record **spring balance reading (F)** and **engine RPM (N)** once readings stabilize.

7 Vary Engine Speed

Repeat measurements at **different RPM values**: 1500, 2000, 2500, 3000, 3500, 4000 RPM.

8 Calculate Parameters

Calculate **torque ($T = F \times R$)** and **brake power ($BP = 2\pi NT/60$)** for each reading.

9 Plot the Graph

Plot **BHP vs RPM curve** using the calculated values and analyze the results.

Safety: Always wear safety glasses and ensure proper ventilation during the experiment.

08 Observation Table

Experimental Data: Constant Load Condition

Torque Arm Radius (R): 0.5 m

S.No.	RPM (N)	Force F (N)	Torque T=F×R (Nm)	BP = 2πNT/60 (W)	BP (kW)
1	1500	20	10.0	1571	**1.57**
2	2000	28	14.0	2932	**2.93**
3	2500	36	18.0	4712	**4.71**
4	3000	44	22.0	6912	**6.91**
5	3500	50	25.0	9163	**9.16**
6	4000	48	24.0	10053	**10.05**

Minimum BHP
1.57 kW
@ 1500 RPM

Maximum BHP
10.05 kW
@ 4000 RPM

Peak Efficiency
3500 RPM
Optimal Range

09 Sample Calculation

Sample 1: At 3000 RPM

Given Data:

- Engine Speed **N = 3000 RPM**
- Spring Balance Reading **F = 44 N**
- Torque Arm Radius **R = 0.5 m**

Step 1: Calculate Torque (T)

$$T = F \times R$$

$$T = 44 \times 0.5 = 22 \text{ Nm}$$

Step 2: Calculate Brake Power (BP)

$$BP = (2\pi NT) / 60$$

$$BP = (2 \times \pi \times 3000 \times 22) / 60$$

$$BP = 414690 / 60$$

$$BP = 6912 \text{ W} = 6.91 \text{ kW}$$

Sample 2: At 3500 RPM (Max Power)

Given Data:

- Engine Speed **N = 3500 RPM**
- Spring Balance Reading **F = 50 N**
- Torque Arm Radius **R = 0.5 m**

Step 1: Calculate Torque (T)

$$T = F \times R$$

$$T = 50 \times 0.5 = 25 \text{ Nm}$$

Step 2: Calculate Brake Power (BP)

$$BP = (2\pi NT) / 60$$

$$BP = (2 \times \pi \times 3500 \times 25) / 60$$

$$BP = 549779 / 60$$

$$BP = 9163 \text{ W} = 9.16 \text{ kW}$$

Key Insight

Maximum Brake Power of **9.16 kW** is achieved at **3500 RPM**, demonstrating the engine's optimal performance range.

10 Graph: BHP vs RPM at Constant Load

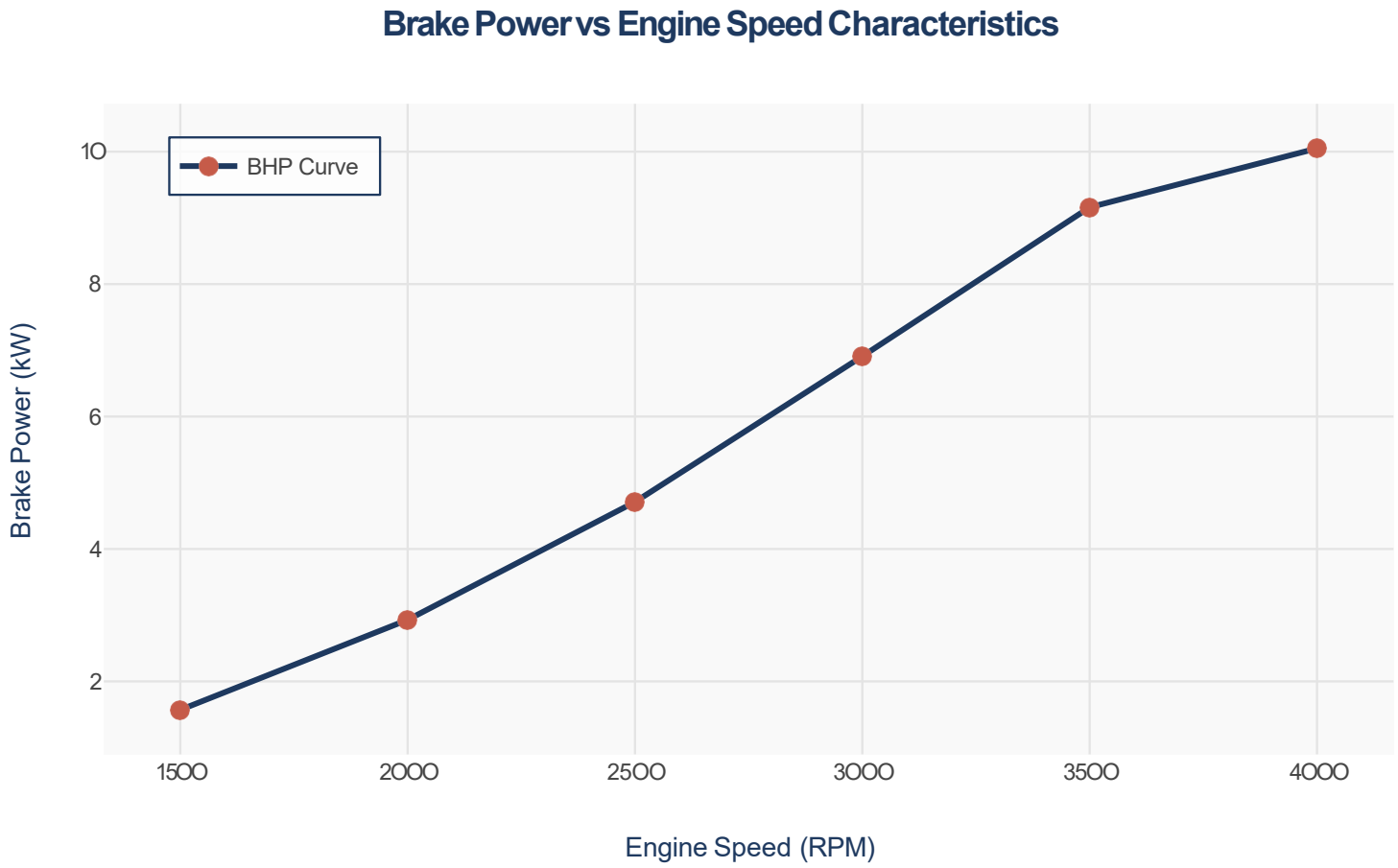

Graph Analysis

Trend Observation
BHP **increases with RPM** up to ~3500 RPM

Peak Performance
Maximum BHP = **10.05 kW @4000 RPM**

Characteristics
Curve shows **near-linear increase** initially

Key Data Points

1500 RPM	**1.57 kW**
2500 RPM	**4.71 kW**
3500 RPM	**9.16 kW**
4000 RPM	**10.05 kW**

11 Results and Conclusion

Experimental Results

BHP-RPM Relationship

Brake Power **increases with engine RPM** at constant load condition, following a near-linear trend in the tested range.

Maximum Power Output

Maximum BHP of **10.05 kW** was achieved at **4000 RPM**, representing the highest power output in the tested range.

Performance Characteristics

The SI engine demonstrates **consistent power delivery** across the speed range with no significant drop-off observed.

Experimental Validation

The experiment successfully validated the theoretical relationship between engine speed and brake power output, confirming that BHP is directly proportional to the product of torque and RPM.

Conclusions

1. The **BHP vs RPM curve** successfully demonstrates the performance characteristics of the SI engine under constant load conditions.
2. **Eddy Current Dynamometer** provides accurate, smooth, and reliable power measurement suitable for engine testing applications.
3. The experiment confirms the theoretical formula **$BP = 2\pi NT/60$** through practical measurements and calculations.
4. Understanding BHP characteristics is essential for **engine design, optimization, and performance evaluation** in automotive applications.

Key Learnings

Torque Measurement	Power Calculation
Dynamometer Operation	Data Analysis

SI Engine Performance Lab

Presented By

Dheeraj Kumar

Roll No: 41623023

Shubham Raj

Roll No: 41623060

Aditiya Yadav

Roll No: 41623005

Ashwani Kumar

Roll No: 41623017