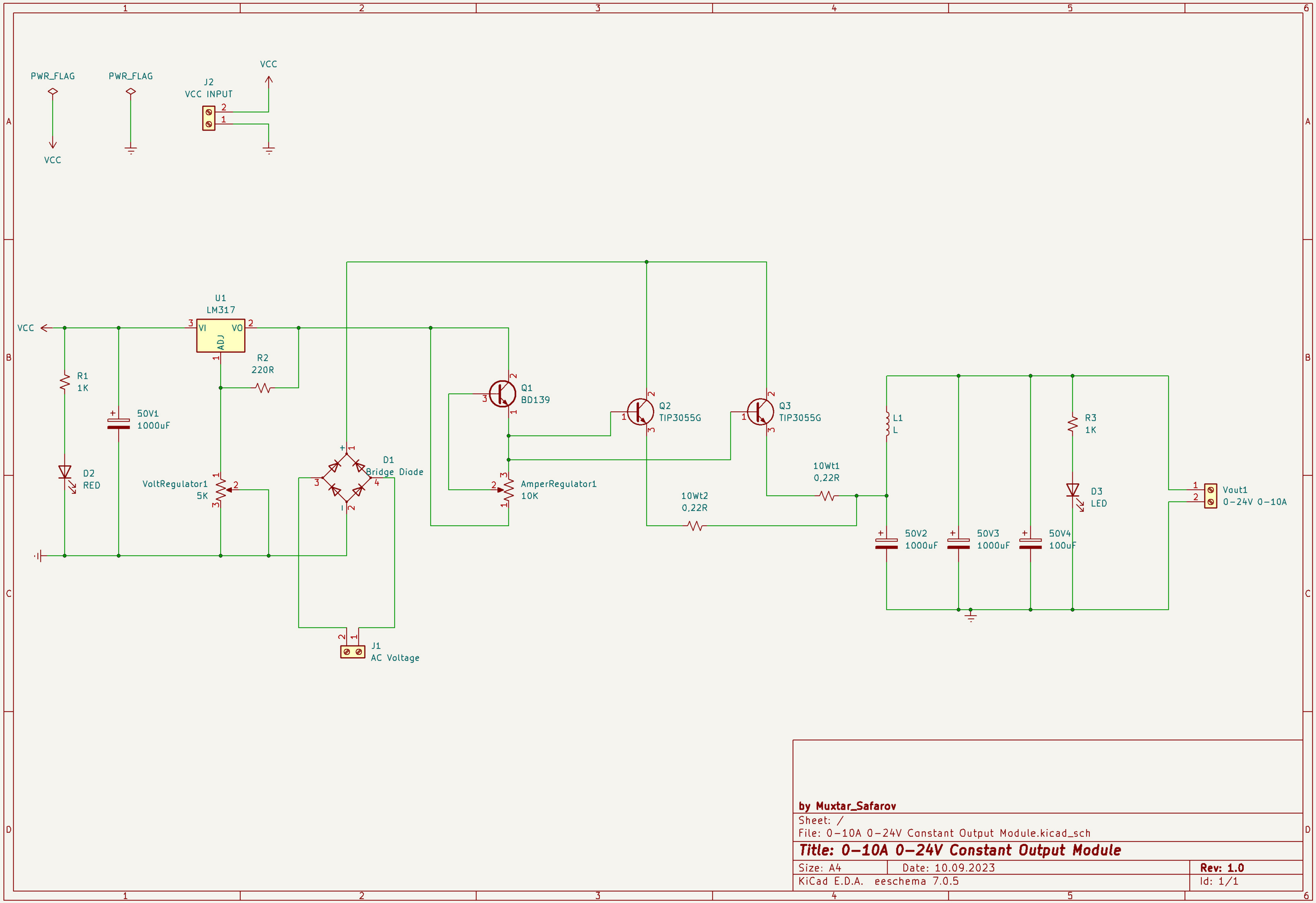

by Muxtar_Safarov

Sheet: /

File: 0-10A 0-24V Constant Output Module.kicad_sch

Title: 0-10A 0-24V Constant Output Module

Size: A4	Date: 10.09.2023	**Rev: 1.0**
KiCad E.D.A. eeschema 7.0.5		Id: 1/1