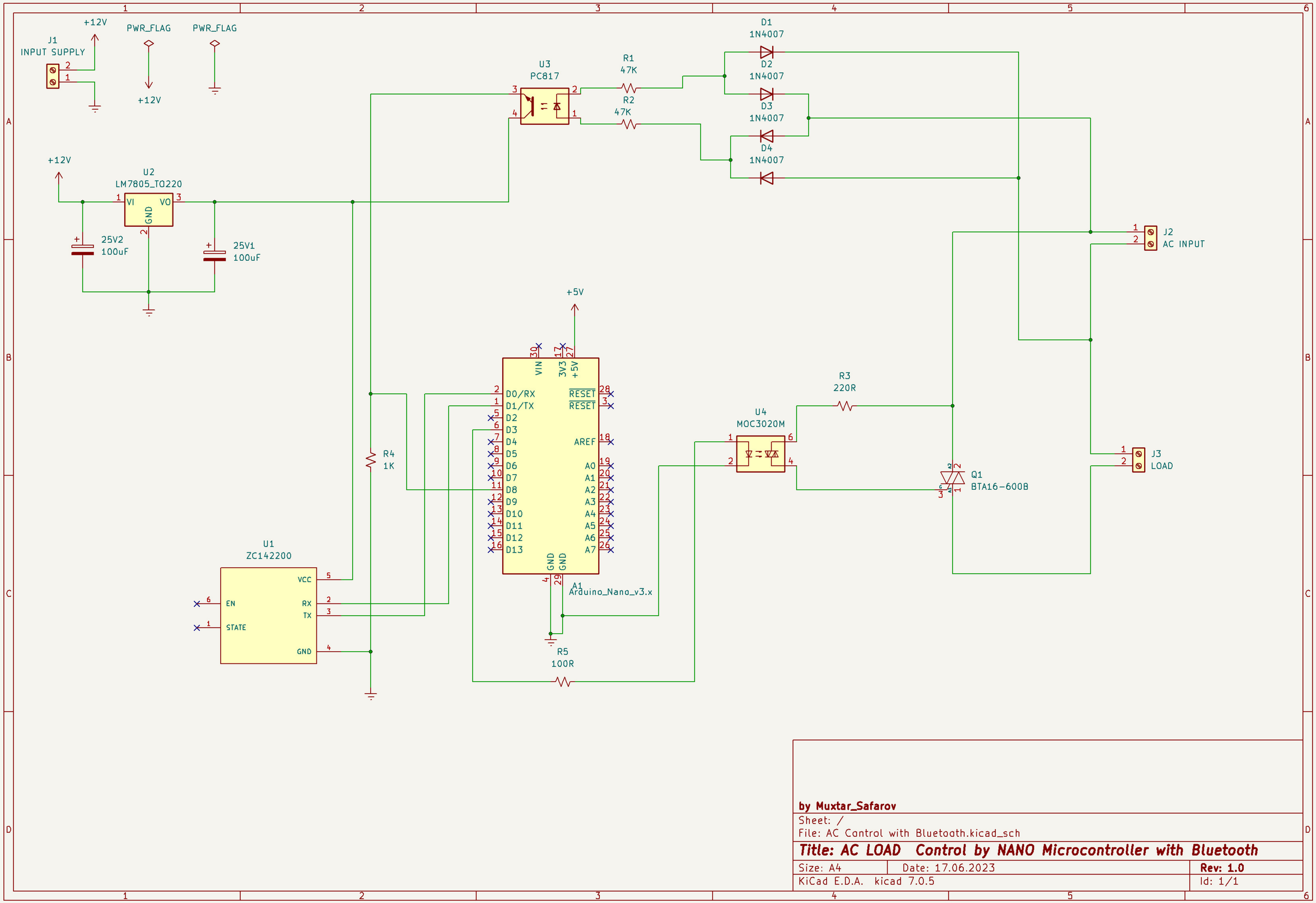

by Muxtar_Safarov

Sheet: /

File: AC Control with Bluetooth.kicad_sch

Title: AC LOAD Control by NANO Microcontroller with Bluetooth

Size: A4	Date: 17.06.2023	Rev: 1.0
KiCad E.D.A. kicad 7.0.5		Id: 1/1