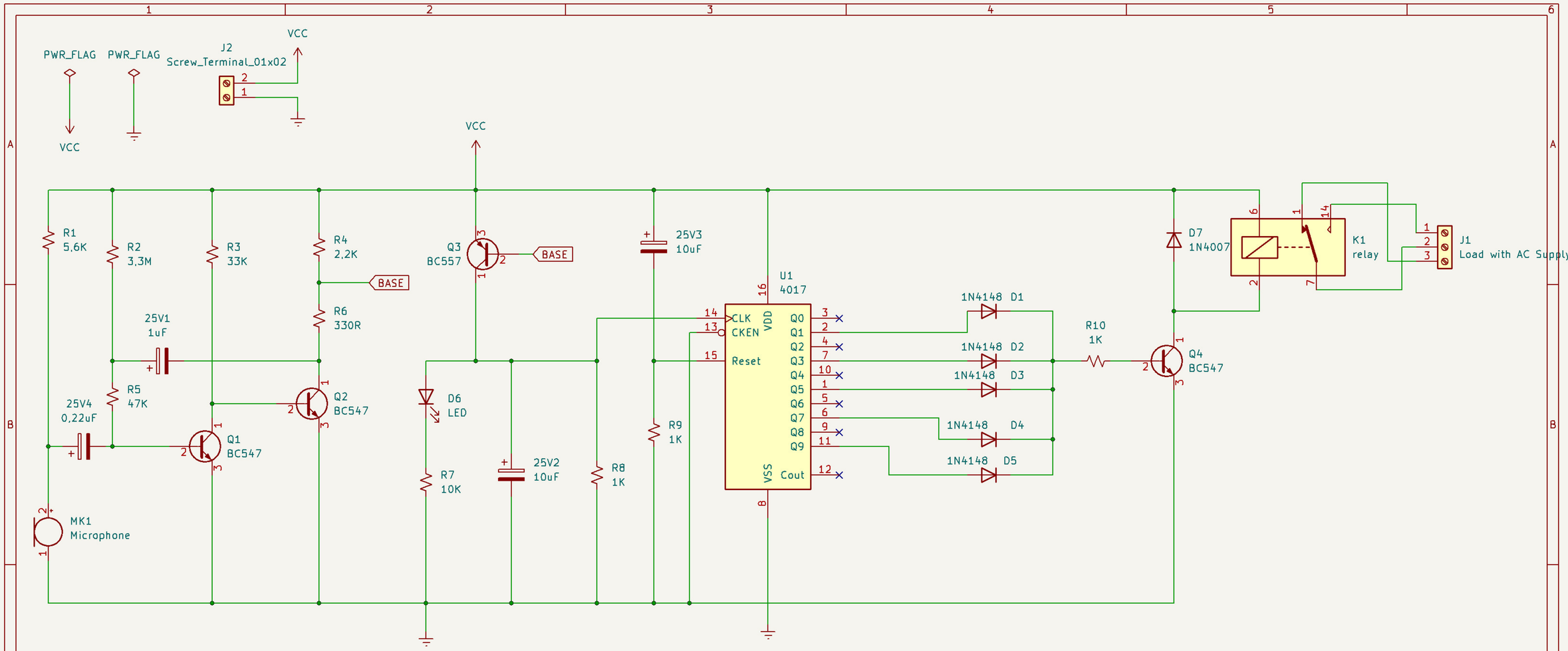

by Muxtar_Safarov

Sheet: /

File: Clap Controlled Switch.kicad_sch

Title: Clap Controlled Switch

Size: A4	Date: 27.01.2023	Rev: 1.0
KiCad E.D.A. kicad 7.0.5		Id: 1/1