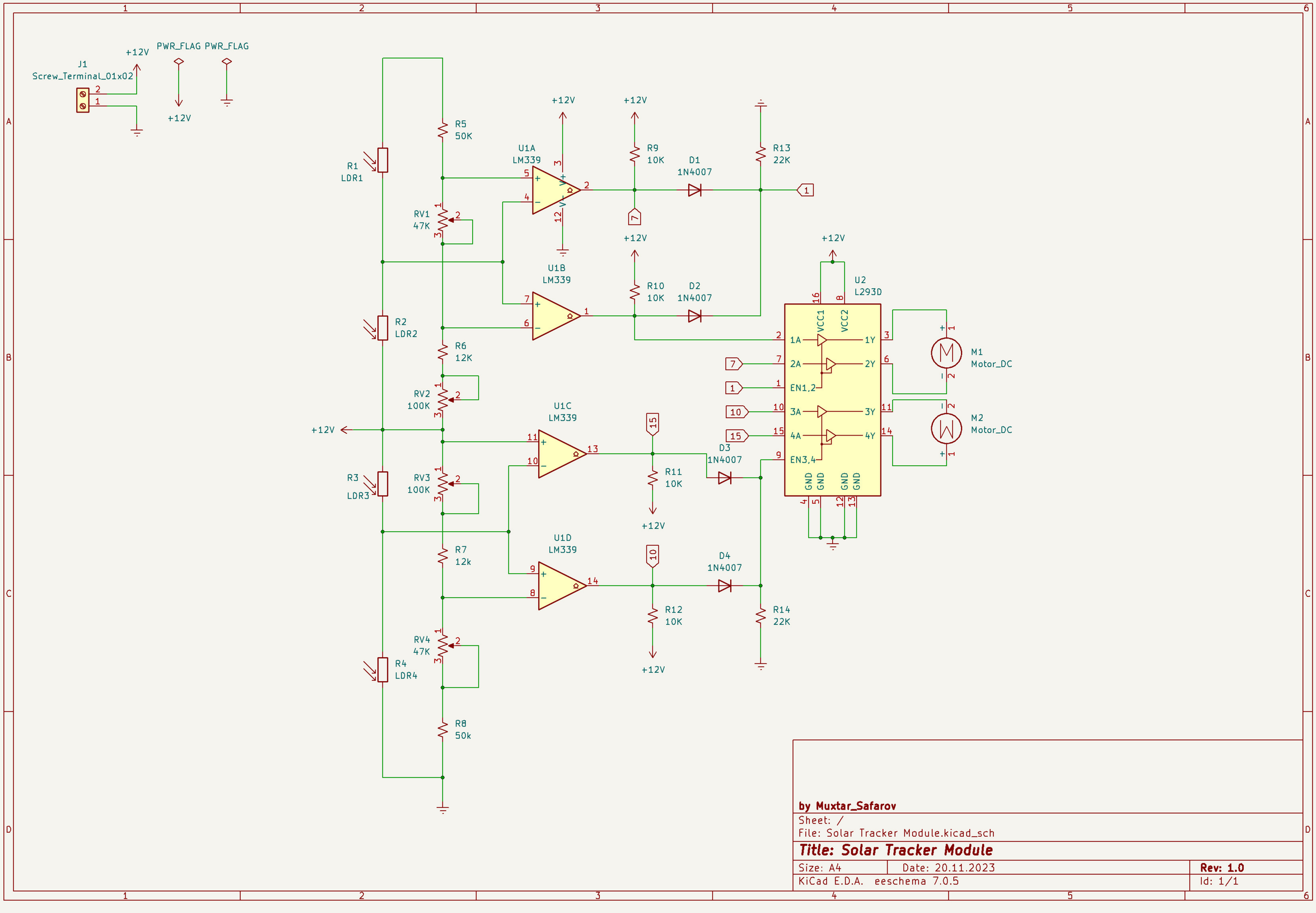
J1
Screw_Terminal_01x02
+12V
PWR_FLAG
PWR_FLAG
R1
LDR1
R2
LDR2
R3
LDR3
R4
LDR4
R5
50K
RV1
47K
R6
12K
RV2
100K
RV3
100K
R7
12k
RV4
47K
R8
50k
U1A
LM339
U1B
LM339
U1C
LM339
U1D
LM339
R9
10K
R10
10K
R11
10K
R12
10K
D1
1N4007
D2
1N4007
D3
1N4007
D4
1N4007
R13
22K
R14
22K
U2
L293D
VCC1
VCC2
1A
2A
EN1,2
3A
4A
EN3,4
1Y
2Y
3Y
4Y
GND
M1
Motor_DC
M2
Motor_DC
by Muxtar_Safarov
Sheet: /
File: Solar Tracker Module.kicad_sch
Title: Solar Tracker Module
Size: A4
Date: 20.11.2023
Rev: 1.0
KiCad E.D.A. eeschema 7.0.5
Id: 1/1