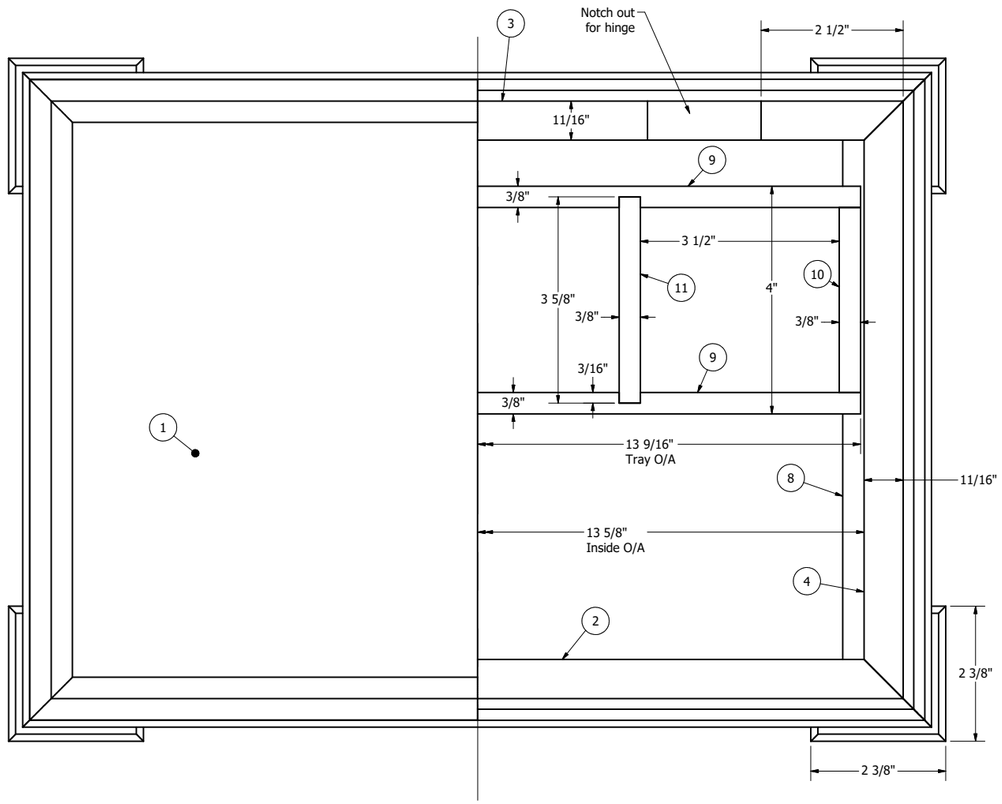

Plan View

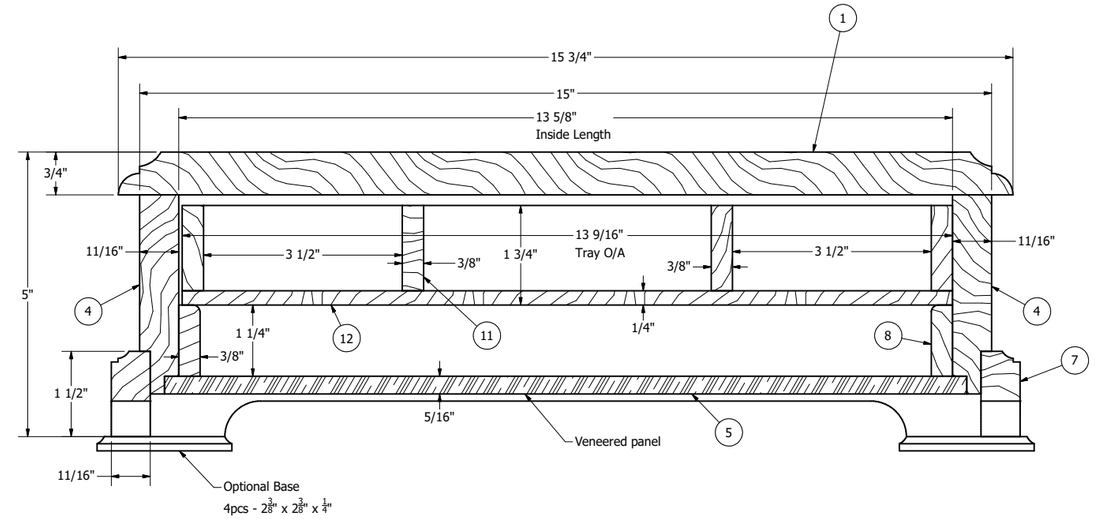

SECTION D-D

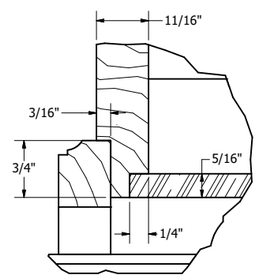

DETAIL E
SCALE 1:1

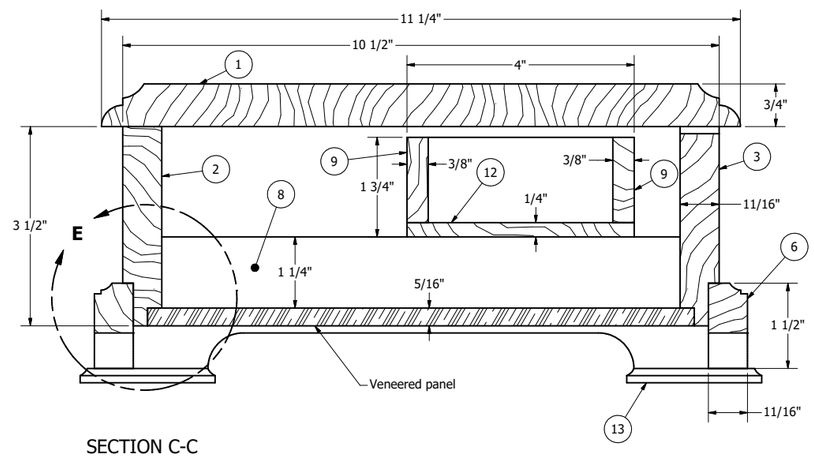

SECTION C-C

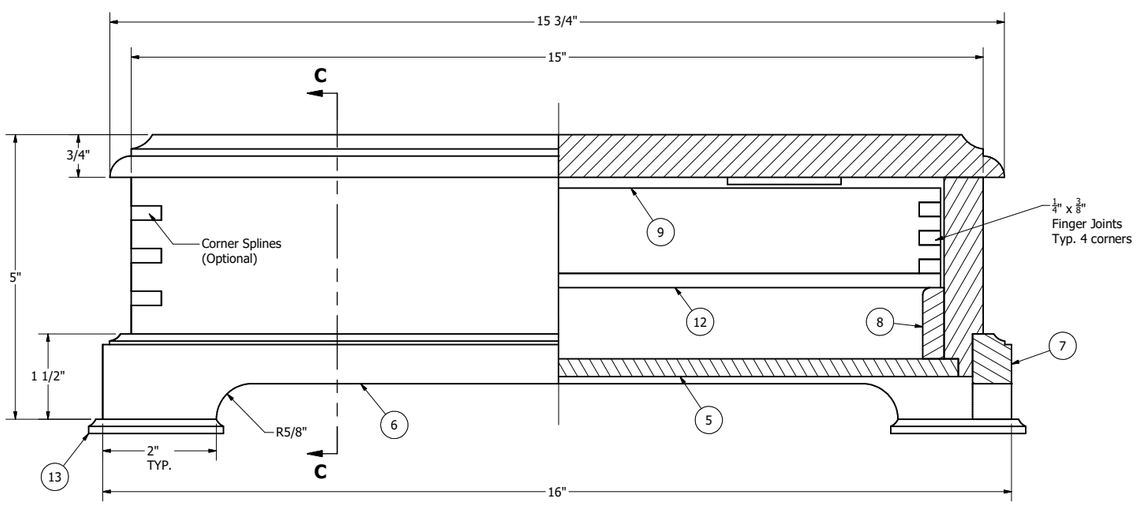

Front View

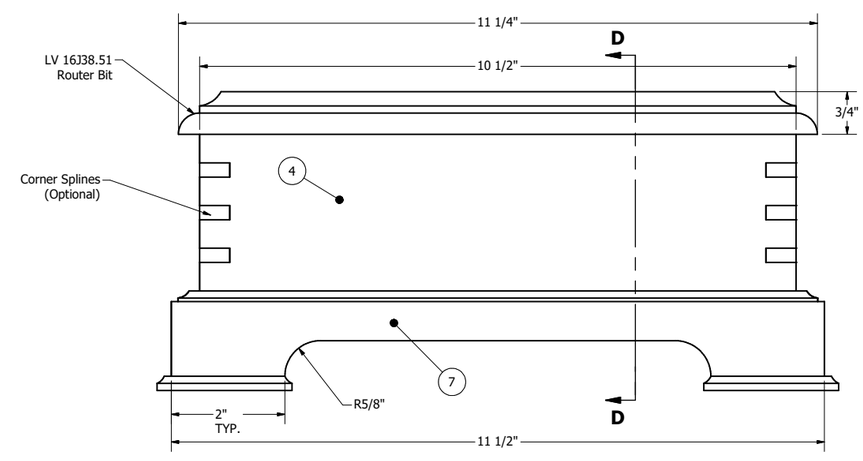

Side View

CONESTOGA COLLEGE WOODWORKING CENTER OF ONTARIO	PROJECT: Jewelry Box		TITLE:		
	DRAWN BY: TDH		FILENAME: jewelry box.idw		
	CREATED: 2009-07-22	REV#:	REV. DATE:	SHEET: 1 OF 2	SCALE: Varies