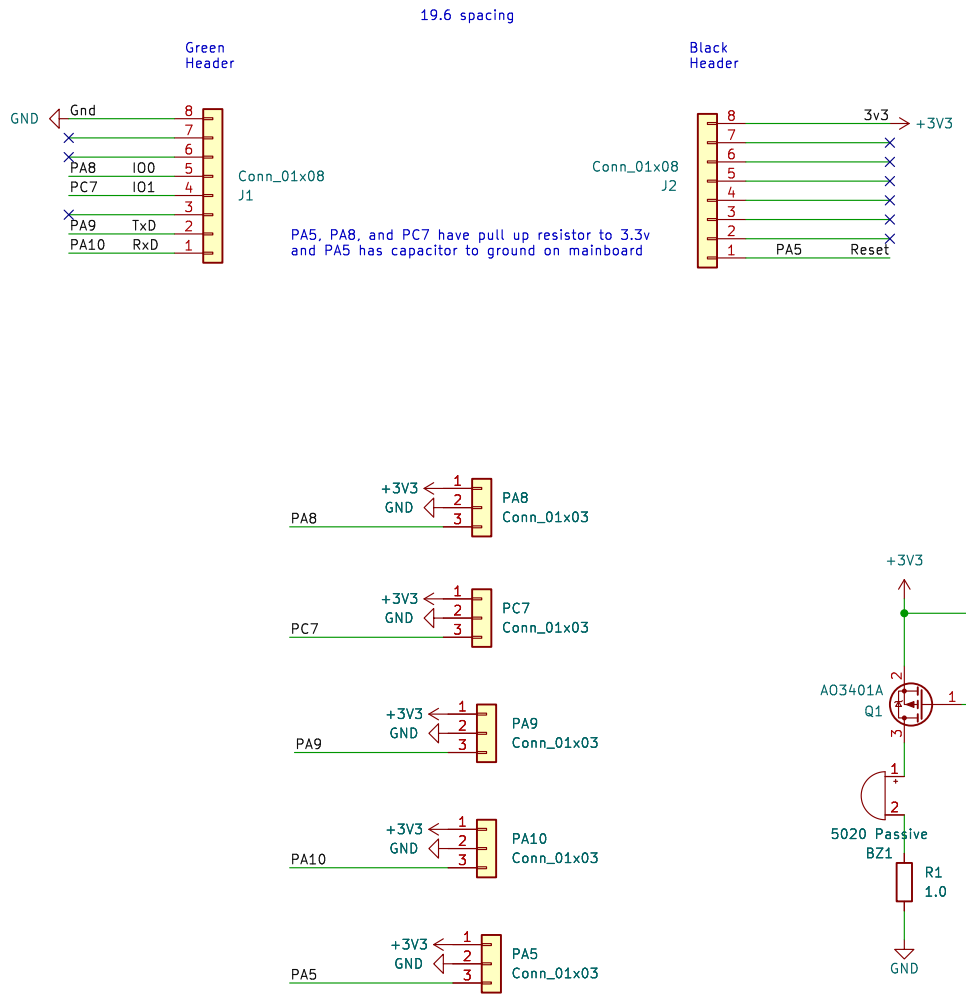

mulcmu

Sheet: /

File: mks_wifi_breakout.kicad_sch

Title: QQSP wifi breakout

Size: A4	Date: 2024-10-06	**Rev: 1**
KiCad E.D.A. kicad 7.0.11		Id: 1/1