L'SPACE Mission Concept Academy - Spring 2023
Preliminary Design Review

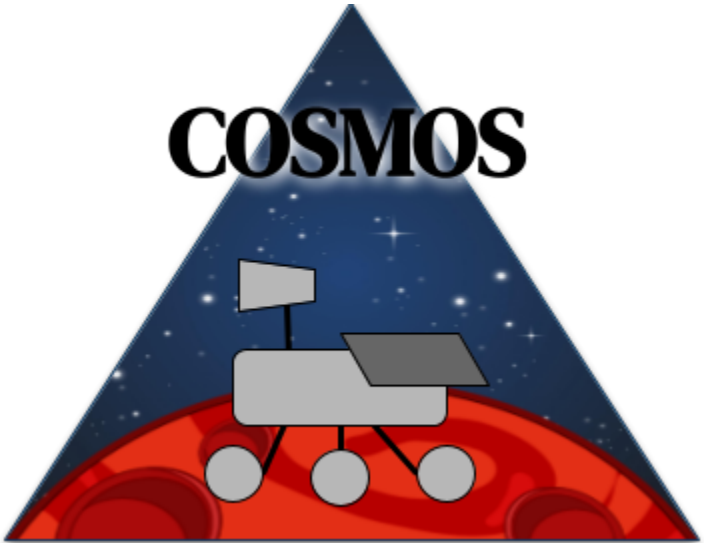

Team 17

COSMOS: Collection Of Samples from Mars Ocean Subsurface

Contents

1. ***Introduction and Summary***
    - **1.1. Team Introduction**
    - **1.2. Mission Overview**
        - *1.2.1. Mission Statement*
        - *1.2.2. Mission Requirements*
        - *1.2.3. Mission Success Criteria*
        - *1.2.4. Concept of Operations (ConOps)*
        - *1.2.5. Major Milestones Schedule*
    - **1.3. Vehicle Design Summary**
    - **1.4. Payload and Science Instrumentation Summary**
2. ***Overall Vehicle and System Design***
    - **2.1. Selection, Design, and Verification**
        - *2.1.1. System Overview*
            - Top level system requirements
            - System interface diagrams
            - CAD and engineering drawings of full assembly
        - *2.1.2. Mechanical System Overview*
            - Mechanical system requirements
            - Verification and Validation
            - CAD and engineering drawings of mechanical assembly
            - Manufacturing and integrations plans
        - *2.1.3. Power System Overview*
            - Power system requirements
            - Verification and Validation
            - Power budget
            - Power vs time chart
            - CAD or images of power system
            - Manufacturing and integrations plans
        - *2.1.4. Comms and Data Handling Overview*
            - CDH system requirements
            - Verification and Validation
            - CAD or images of CDH system
            - Manufacturing and integrations plans
        - *2.1.5. Thermal Management System Overview*
            - Thermal system requirements
            - Verification and validation
            - Heat flow maps
            - CAD or images of thermal system
            - Manufacturing and integrations plans

2.1.6. Confidence and Maturity of Design
- Trade studies
- Discussion of evolution
- Current and intended TRL

2.2. Recovery/Redundancy System

2.3. Payload Integration

3. Science Instrumentation

3.1. Selection, Design, and Verification

3.1.1. System Overview

3.1.2. Instrumentation Evolution

3.1.3. Subsystem Overview

3.1.4. Procurement Plans

3.1.5. Verification and Validation Plan

3.2. Science Value

3.2.1. Science Payload Objectives

3.2.2. Science Traceability Matrix

3.2.3. Payload Success Criteria

3.2.4. Experimental Logic and Evolution, Approach, and Method of Investigation

3.2.5. Testing and Calibration Measurements

3.2.6. Precision and Accuracy of Instrumentation

3.2.7. Expected Data & Analysis

4. Mission Risk Management

4.1. Mission Risk Management

4.1.1. Risk Analysis

4.1.2. Failure Mode and Effect Analysis (FMEA)

4.1.3. Personnel Hazards and Mitigations

5. Activity Plan

5.1. Schedule

5.2. Budget

5.3. Outreach Summary

5.4. Program Management Approach

6. Conclusion

7. References

1. *Introduction and Summary*

1.1. Team Introduction

	Carolina Cano Moreno **Project Manager** Christian Brothers University in Memphis, Tennessee Carolina is a Mechanical Engineering and Mathematics student, and she brings experience in mechanical design with software such as SOLIDWORKS, Creo CAD, and AutoCAD. She is the current president of the Tau Beta Pi and Society of Women Engineers chapters, and has extensive experience working with teams in professional and academic settings.
	Sam Courtney **Lead Systems Engineer/ Safety Officer** Mississippi State University in Starkville, Mississippi Sam is an Aerospace Engineering major with minors in Electrical Engineering and Mathematics. He currently works part-time as an Undergraduate Lab Assistant at the Aerospace Engineering Laboratory at MSU and is a member of Bulldog Motorsports, a local formula SAE racing team. His skills include
	Sydney Leggio **Chief Scientist/ Business Officer** University of Minnesota in Minneapolis, Minnesota Sydney is an Astrophysics major with a minor in Environmental Geosciences. She brings experience with software such as Python, C++, Github, and Matlab to the team. She is the Founder and current President of Students for the Exploration and Development of Space (SEDS) at UMN, in which she has gained extensive experience in leadership and teaming.
	Alexis Lopez **Mechanical Engineer/ Planetary Geologist** Lone Star College, Texas Alexis is a freshman pursuing a degree in Aerospace Engineering and minor in Mathematics. She brings experience with software such as Python, Java, Matlab and C++. Alexis is also a NCAS (NASA Community College Aerospace Scholars) member. She works part time and is a student full time.

	Kian Patel **Mechanical Engineer/ Researcher** Texas A&M University, Texas Kian is a sophomore majoring in Aerospace Engineering and minoring in Mathematics. He brings different types of skills and knowledge through experiences with software such as python, CAD Autodesk Inventor, and Solidworks. He currently works in a chemical engineering research lab modifying microfluidic devices through Solidworks to allow other specialists to better study different types of bacteria.
	Milad Abu Rass **Thermal Engineer/ Astrophysicist** St. Olaf College in Northfield, Minnesota. Milad is a Physics and Mathematics major with a concentration in Engineering. He is a vice-president of the Astronomy Club, and brings experience in Python, Vpython, CAD, C++, and HTML. He has experience with arduino based projects.
	Hayes Richey **Electrical Engineer/ Astrophysicist** Mississippi State University in Starkville, Mississippi Hayes is an Aerospace Engineering major with minors in Electrical Engineering and Mathematics. He currently works part-time, as an Undergraduate Research Engineer at the Raspet Flight Research Laboratory, and is a member of Tau Beta Pi, Phi Kappa Phi, and the Space Cowboys, a local high-powered rocketry team. He is experienced with SolidWorks and MATLAB and enjoys solving complex technical problems
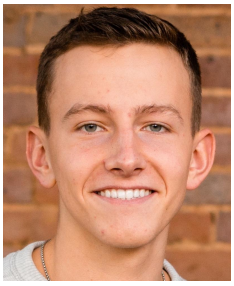	**Luke Sparlin** **Deputy Project Manager/ Hydrologist** University of Oklahoma in Norman, Oklahoma Luke is a student in the Gallogly College of Engineering, Aerospace Engineering Degree program with a minor in Electrical and Computer Engineering. He is a member of the Sooner Rover Team and belongs to OU's chapter of Students for the Exploration and Development of Space (SEDS). Luke brings an eagerness to learn from, and contribute to, both the mission and his team.
	Jonathan Torres **Computer Hardware Engineer/ Outreach Officer** Palo Alto College in San Antonio, Texas Jonathan Is pursuing a degree in mechanical engineering. He currently is going to school full-time and works full-time. He brings experience in CAD and Python. He is also a former NCAS (NASA Community College Aerospace Scholars) member.

1.2. Mission Overview

1.2.1. Mission Statement

The mission aims to evaluate Mars' current climate and climate history and explore the possibility of life. The mission will achieve these goals by studying the physical and chemical composition of the northern polar ice cap, specifically measuring the H2O composition and surface radiation levels.

To achieve this, the rover will utilize a variety of non-destructive sensors to study the polar ice cap's composition and measure surface radiation. Specifically, the RIMFAX will make visible the physical structures of the subsurface terrain while the ChemCam sensor will evaluate the chemical composition of the exposed, topmost layers. The RAD will measure the baseline radiation in the atmosphere while the DAN will measure subsurface H2O levels. By studying these factors, the mission aims to gain a better understanding of the planet's atmospheric history and whether or not Mars may have fostered life.

The data gathered will help expand the knowledge about the chemical and physical processes that have formed the polar layers and also provide insight into the presence of water on Mars. This insight will allow the evaluation of Mars' atmospheric history and the possibility of life which will further expand on current data, especially data collected from the most recent Perseverance and Ingenuity rovers.

1.2.2. *Mission Requirements*

Given that the rover will be transported to the Martian surface as a secondary payload onboard a rocket with a primary payload spacecraft, the overall mission cost is to remain below $275 million. This budget includes the final design and fabrication of the rover, including various mission costs incurred. The total mass is not to go over 30 kg, the total volume must not exceed 100 cm cubed, and the system is to maintain structural integrity within the temperature range of 120- 273 degrees Kelvin with the help of thermal management systems. The system must have sufficient power allocation to operate as needed and supply power to the science instruments. Additionally, the system shall integrate all payload components for proper functionality. Finally, the rover must communicate directly to the primary lander in order for the data to be transmitted to a spacecraft orbiting around Mars, which will ultimately be sent to earth.

Req #	Requirement	Rationale	Parent Req
Mission Reqs			
MR-001	The system shall determine the chemical and physical processes that form and modify layers.	Provided by Mission Document	Customer
MR-002	The system shall extract and interpret the climate record stored in Mars Polar Layered Deposits.	Provided by Mission Document	Customer
MR-003	The system shall have a mission lifespan of 60 Earth days.	The mission necessitates this minimum amount of time to aquire sufficient data to satisfy the mission objectives.	MR-001, MR-002
Mechanical Reqs			
MEC-001	Total mass shall not exceed 30 kg.	Defined by mission document	Customer
MEC-002	Total volume must not exceed 100 cm.	Defined by mission document	Customer
MEC-003	The system shall maintain structual integrity within the temperature range of 120-273 degrees Kelvin.	Structure expands and contracts with the temperature fluctuations of the space environment.	MR-003
Electrical Power System (EPS) Reqs			
EPS-001	The system shall have sufficient power allocation to operate as needed.	System requires power to operate instruments and communicate with Earth ground station.	Customer
Payload Reqs			
PAY-001	The system shall integrate scientific instruments.	Integration of the scientific instruments will guarantee the necessary data is collected.	MR-001, MR-002
Command & Data Handling Reqs (CDH)			
CDH-001	Lander shall be able to transmit and receive information to and from spacecraft.	Data transmission must reach the lander from the spacecraft for successful landing.	MR-003
CDH-002	Lander shall be able to transmit information to Earth ground station.	Data transmission must reach Earth station to provide chemical composition findings from samples and allow scientists to analyze this data.	MR-001, MR-002
CDH-003	Lander shall be able to receive information from Earth ground station.	Allow for spacecraft to receive input regarding orientation and instrument alignment from the science team on Earth.	MR-001, MR-002
CDH-002.1	The system shall transmit at 7.2 GHz.	Frequency needed for successful transmission.	CDH-002
Thermal Control System (TCS) Reqs			
TCS-001	The system shall maintain an internal temperature of 273 ± 15 degrees Kelvin for the duration of the mission.	Ensure systems are able to properly function.	MR-001, MR-002, MR-003

Table 1.1: Mission Requirements

1.2.3. Mission Success Criteria

In order for the project to be successful, there is a series of success criteria for the mission that must be met. This includes using thermal control systems to ensure the science instrumentation and subsystems of the rover are protected against the Mars environment and that there is enough power generated to allow for the functioning of every system. Additionally, the instruments must be able to collect and process the corresponding data, and transmit it back to earth to be analyzed.

<u>Communications:</u>

- The rover should be able to communicate with Mars orbiters between 160 and 250 miles (257 and 400 kilometers) above the surface of Mars.
- The rover should also be able to transmit 100 and 250 megabits of data to Mars orbiters to be sent to Earth.
- Rover should communicate between frequencies of 7.5 - 8.5 GHz.

<u>Power Systems:</u>

- The rover should be able to produce a minimum of 50W of power for science instruments.
- The motors for the wheels should produce a minimum of 10W each to power the wheels.

<u>Thermal Management:</u>

- The rover should be able to produce up to 0-30W of heating consistently.
- The internal temperature of the rover shall not drop down below 300K.
- The internal temperature of the rover shall not exceed 355K.

<u>Mobility:</u>

- The rover should be able to drive at a 1km per day rate on average, for at least 14 days over the course of the mission.

<u>Science Objectives:</u>

- Determine the percent composition of H2O in PLD
    - Detect water content up to 1/10th of one percent
    - Range of up to 3 feet below the surface of the polar ice deposits
- Examine geologic features below the surface to determine the physical processes that may have formed the layers
    - View subsurface geologic features with ground-penetrating radar up to 30 meters deep
    - Measurements occur every 4 inches along the rover track
- Determine levels of radiation at PLD surface
    - Provide an reading of radiation from the sun within 2% level of error

1.2.4. Concept of Operations (ConOps)

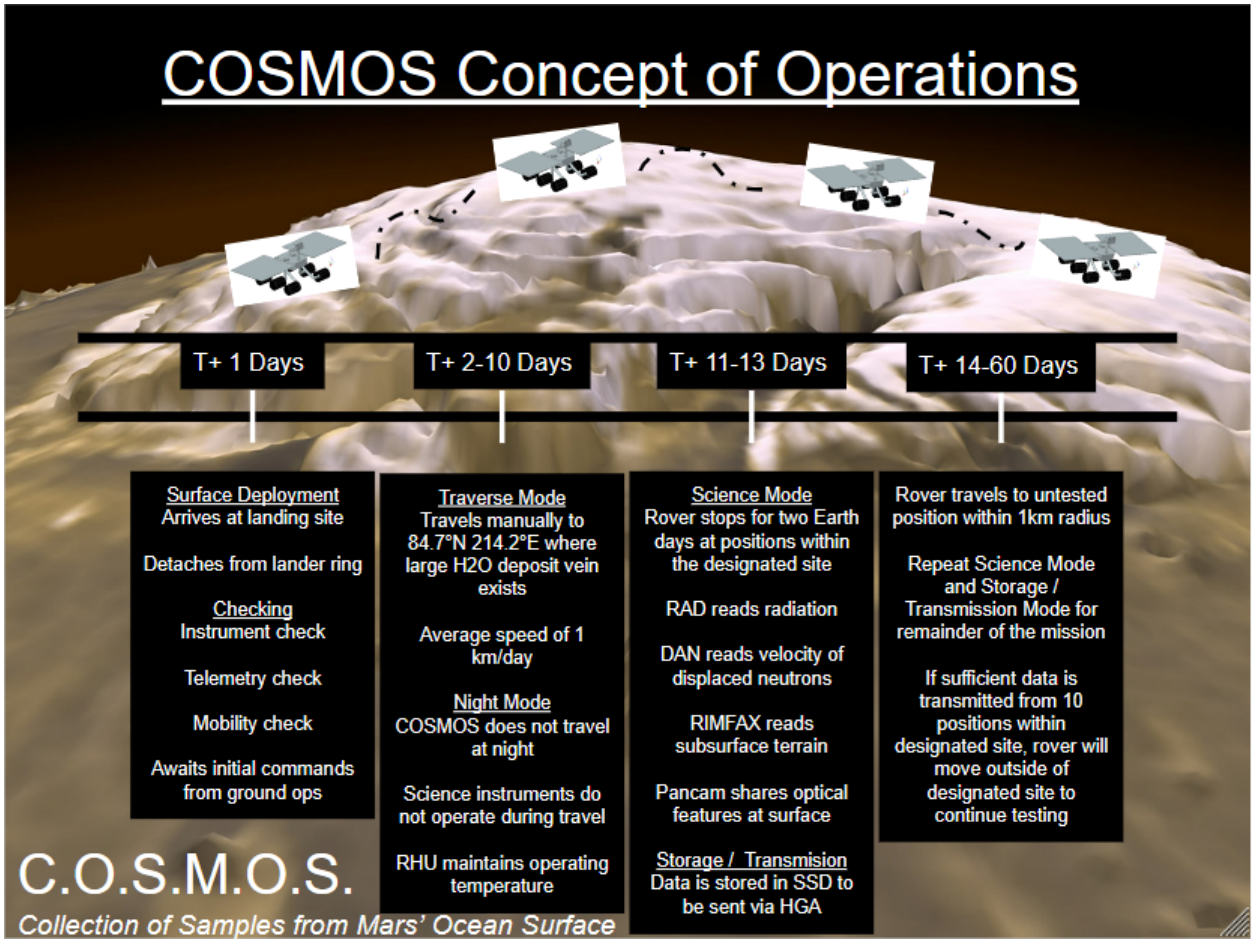

Figure 1.1: Concept of Operations for COSMOS.

The expected duration of the COSMOS mission will be a period of 2 months or 60 Earth Days. Upon landing, COSMOS will detach from the ring holding the rover to the lander and lower itself to the surface. After completing the necessary checks, COSMOS will await instructions from Earth. The journey of the rover to the designated science site, which can be found in section 3.2.4., will be manually driven over a period of no more than 10 days. No science will be collected during the traversal period, nor will any travel occur without the solar energy of day. Upon arriving at the site, COSMOS will take up a position to conduct science and testing and share its findings with earth. Within a 1km radius of travel, COSMOS will find a new position to conduct more testing within the site. Once 10 separate test positions within the site have transmitted sufficient data to earth, the rover will venture past the designated site to continue its mission until unable to carry out functions.

1.2.5. Major Milestones Schedule

Phase B **Preliminary Design and Technology Completion**	**Phase C** **Final Design and Fabrication**	**Phase D** **System Assembly and Checkout**	**Phase E** **Operations and Sustainment**
January 2023- April 2023	May 2023- May 2026	May 2026 - January 2028	January 2028- May 2028
- Preliminary Design Review (PDR)	**-** Critical Design Review (CDR) - Test Readiness Review (TRR)	**-** System Integration Review (SIR) - Operational Readiness Review (ORR)	**-** Critical Events Readiness Review (CERR)
Baseline Project plan	**Testing**	**Arrival**	**Launch (May 2028)**

Table 1.2: Mission Milestones from Phase A to Phase E.

The development starts in May 2023 with the Preliminary Design Review in being completed by April 2023. After this, further analysis is required with a Critical Design Review and Test Readiness Review expected to be done within the following three years, meaning by April 2026. Final development, system assembly and check out then starts in May 2026 and it will go on for two years. During this time the System Integration Review and the Operational Readiness Reviews will take place. The mission is projected to have a launch date in May 2028, with a landing date in June 2028. Surface operations would occur as soon as the lander gets the rover on the Mars surface, with a mission duration of approximately 2 months or 60 earth days.

1.3. Vehicle Design Summary

The rover has been specifically engineered to ensure stability and sturdiness while safely transporting our scientific instruments without causing any damage or introducing errors into the data. With its four wheels featuring an aluminum suspension system and a main frame constructed from titanium, the rover is built to withstand challenging terrains. The mast that supports its cameras is an essential part of the rover's design, with the PanCam and ChemCam positioned atop it to provide optimal views of the surrounding terrain. In addition, the rover's two solar panels can be extended accordion-style from its sides, allowing it to maximize its power generation capabilities. The vehicle's dimensions vary based on the position of the solar panels, with retracted panels resulting in dimensions of 783mm x 960mm x 850mm and extended panels leading to dimensions of 2255mm x 960mm x 850mm. The current mass of the vehicle is 29.999 kg.

Figure 1.2: COSMOS System Block Diagram.

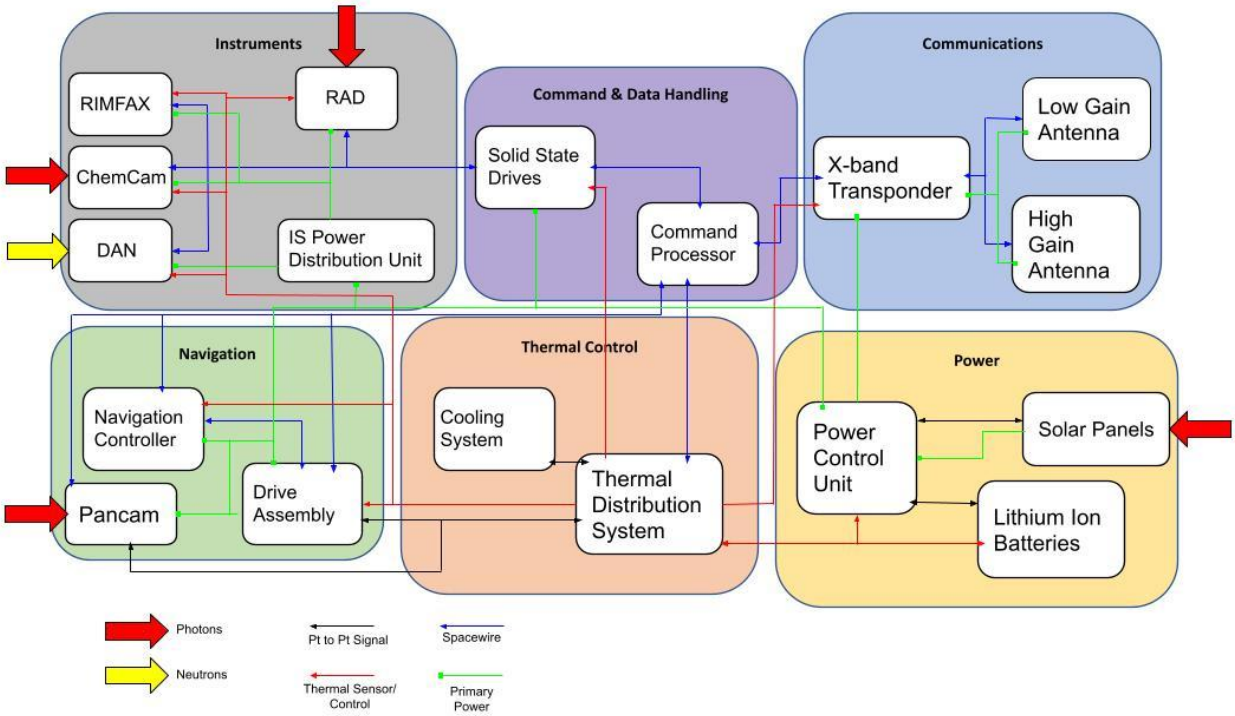

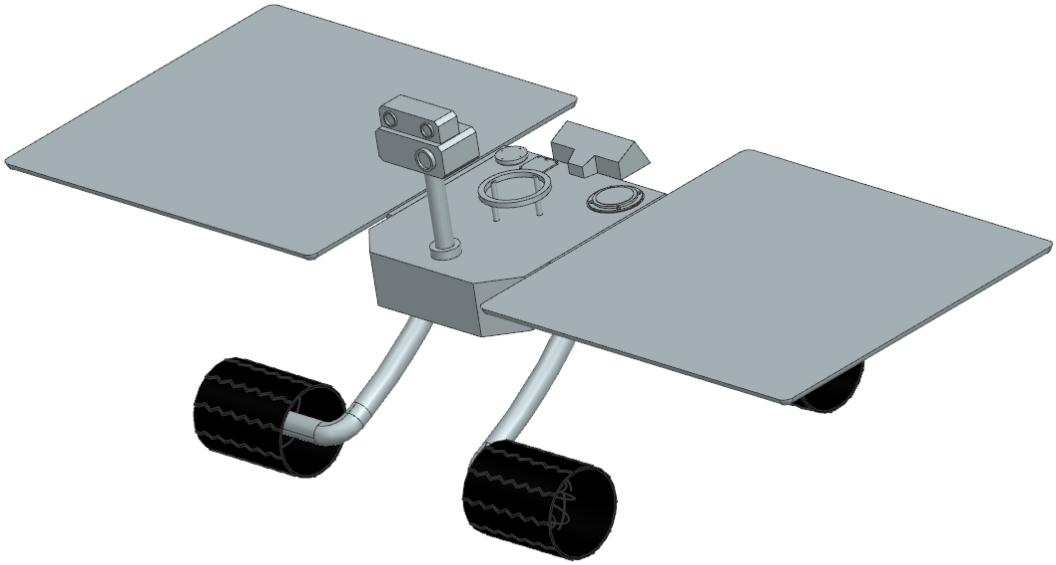

Figure 1.3: Isometric view of rover.

1.4. Payload and Science Instrumentation Summary

The rover shall utilize five distinct science instruments. These instruments are all heritage components from past Mars missions, namely Perseverance and Curiosity Rovers. The science instrumentation suite includes: The Radar Imager for Mars' Subsurface Experiment (RIMFAX), The Dynamic Albedo of Neutrons tool (DAN), The Radiation Assessment Detector (RAD), a Panoramic Camera (PanCam), and a Chemistry and Camera tool (ChemCam).

The RIMFAX is located on the underside of the rover, as its primary purpose is to use radar waves to probe the ground under the rover. Using these radar waves, RIMFAX reveals the geological features hidden beneath the Martian surface [13]. It can also detect water, ice, and salt up to 30 meters below the surface.

The DAN will be able to expand on the findings of the RIMFAX by precisely measuring the amount of water content below the surface, detecting as little as 1/10th of one percent [10]. Since DAN can measure up to a meter below the surface and an average Martian layer is around a centimeter, DAN will be able to measure the water content for the past 100+ years at our desired sites.

The RAD will be mounted inside the rover, pointing upwards. RAD measures the amount and type of harmful radiation on the Martian surface from the Sun and other space sources [11]. The data collected by RAD will be compared to the data collected by DAN to find the correlation between radiation in the atmosphere and water content below the surface, if it exists.

The PanCam will primarily be utilized for navigation purposes. Mounted above the body of the rover, it will be the "eyes" of the rover for the ground station on Earth. The cameras are able to rotate 360° and take 3-D, multi-wavelength full color images [9]. This feature will stimulate creation of a map of the polar cap region, in addition to the many 3-D images of rocks and minerals it will provide. Finally, the ChemCam, mounted on the same mast as the PanCam, will be used for chemical analysis of the minerals and elements found in the polar cap region of the Martian surface. ChemCam will use a high-resolution camera to take close-up photos of rocks and minerals of interest that will be transmitted to scientists on Earth. Additionally, ChemCam is equipped with a spectrometer that will identify atomic elements in Martian rocks from up to seven meters away [8]. Both PanCam and ChemCam will be mounted on a mast that can be tilted and rotated for optimal viewing. All instruments will be utilized at the selected sites of the polar cap region to obtain a full complement of data in each location.

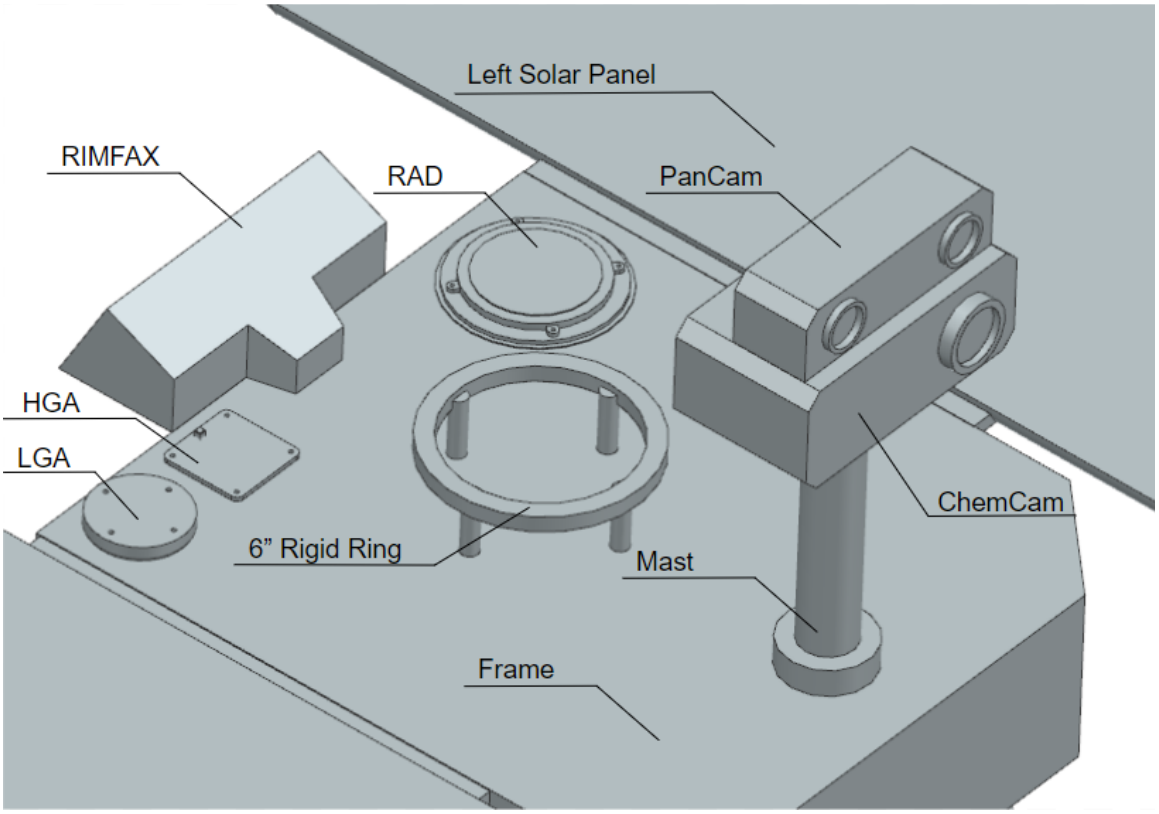

Figure 1.4: View of Science Instruments on rover. DAN sits within the frame.

2. Overall Vehicle and System Design

2.1. Selection, Design, and Verification

2.1.1. System Overview

The main focus of our vehicle is a good delivery system that will keep the science instruments secure and operating at optimal levels. To achieve this, the rover has to be maneuverable, stiff enough to protect its components, have a reliable source to power the instrumentation, be warm enough to operate effectively, and be able to be communicated with.

The rover is made up of four main systems: mechanical, power, communications and data handling, and thermal management. The mechanical system is in charge of the main rover structure and ensuring that the payload is safe and secure during the mission. This involves four main parts: mobility, frame, robotics, and mechanical interfaces. The power system is responsible for supplying energy to each individual component and making sure that the vehicle is operating in an efficient manner. The power system is made up of energy generation, energy storage, and energy management. These three categories cover all of the responsibilities of the power subsystem and their integration will ensure the rover is able to achieve its mission objectives. The comms and data handling section (CDH) involves ensuring data is received and transmitted and that the vehicle has the required telemetry to fulfill mission requirements. CDH consists of navigation, intersystem communication, and data transmission. The thermal management system is required to ensure the vehicle can maintain sufficient operating temperatures. This requires temperature measurement, thermal allocation, and thermal generation.

System	Mass (kg)	Volume (m^3)	Dimensions (m) (L *W*H)
Chassis	4.001	0.027	0.50*0.45*0.12
Suspension (x2)	5.24	0.00194	0.80*0.80*0.36
Wheels (x4)	5.28	0.010	0.15*0.20*0.20
Power System	2.58	0.4865	1 Solar Panel: 0.81*0.3*0.2
High Gain Antenna	0.0023	.0028	.007*.06*.06
Low gain Antenna	0.16	.0035	.068*.043*0.53
Thermal Management	0.8	3.7*10^-4	Cylinder(rad=0.013,height=0.032)x20
Science Instrumentation	11.93	N/A	N/A
Total	29.9933	0.53211	0.8689*2.2746*835.2 (extended solar panels) 0.998*0.8341*0.8352 (stowed solar panels)

Table 2.1: System description with numerical values.

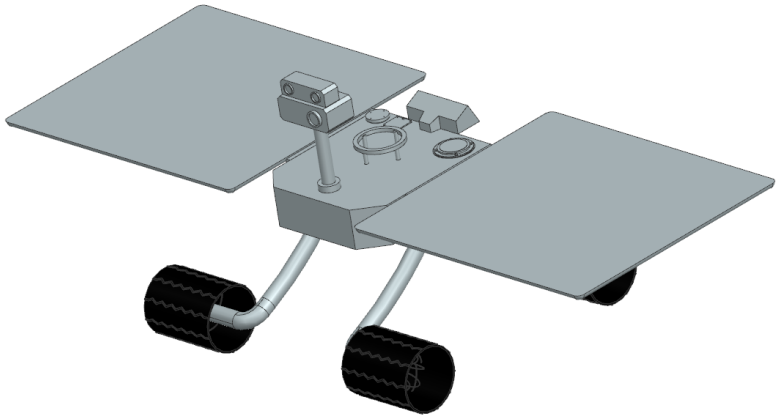

Figure 2.1: Isometric view of rover.

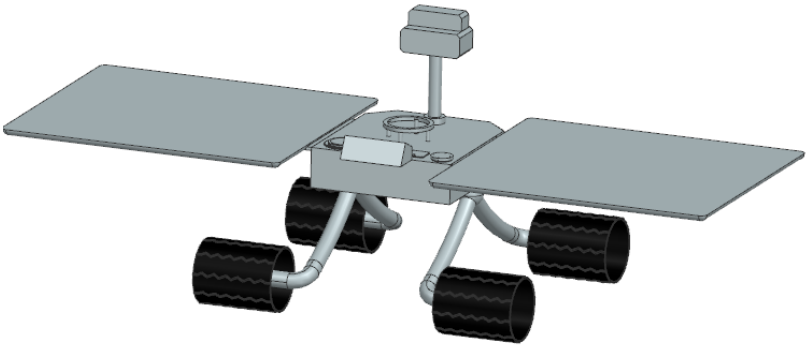

Figure 2.2: Back view of rover.

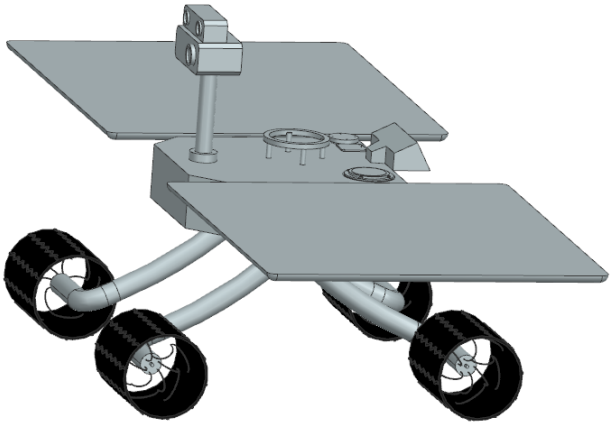

Figure 2.3: Side view of rover.

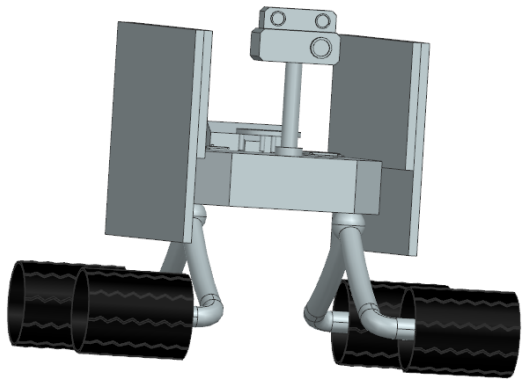

Figure 2.4: Stowed solar panel configuration.

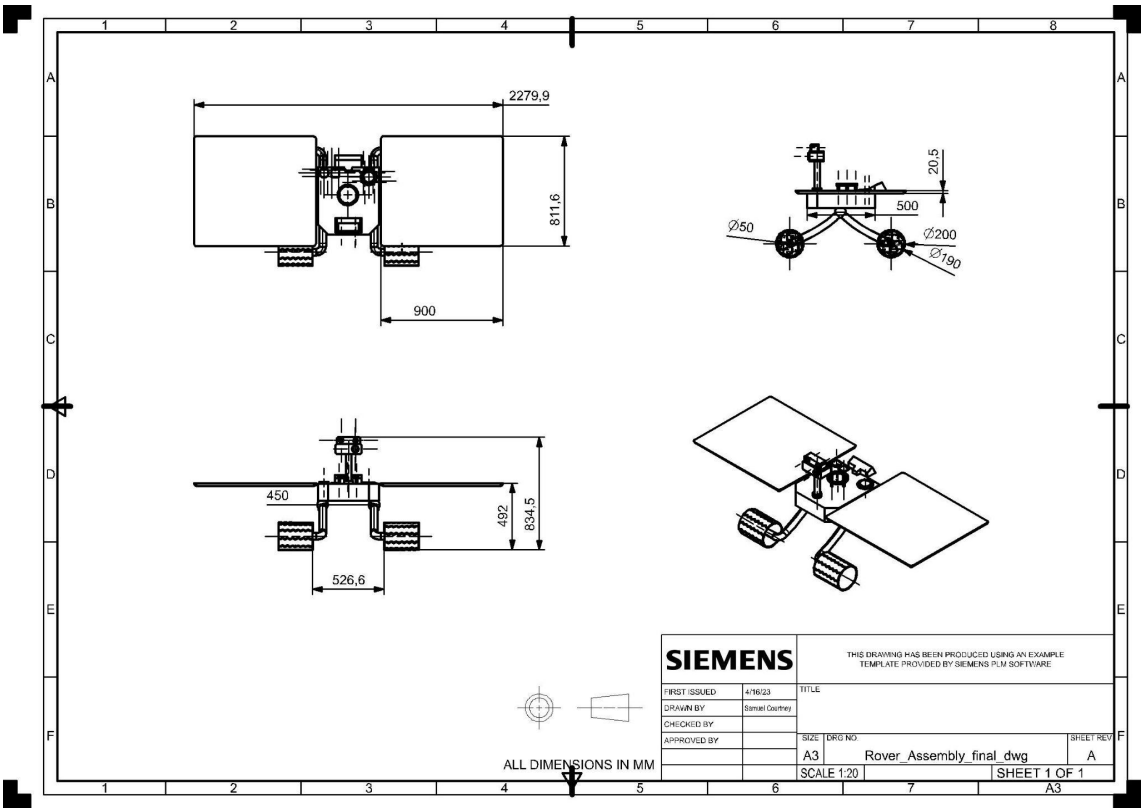

Figure 2.5: Drawing of top, right, front and isometric views of rover assembly.

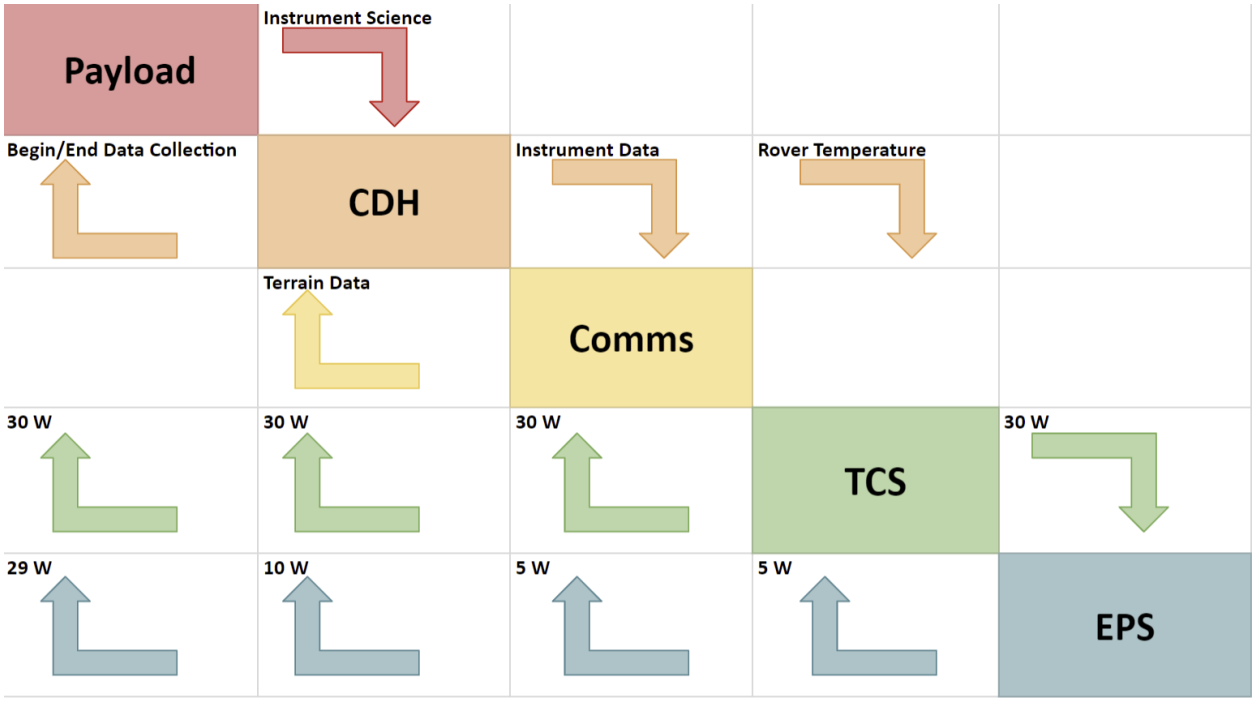

Figure 2.6: N² Chart for Payload Subsystems.

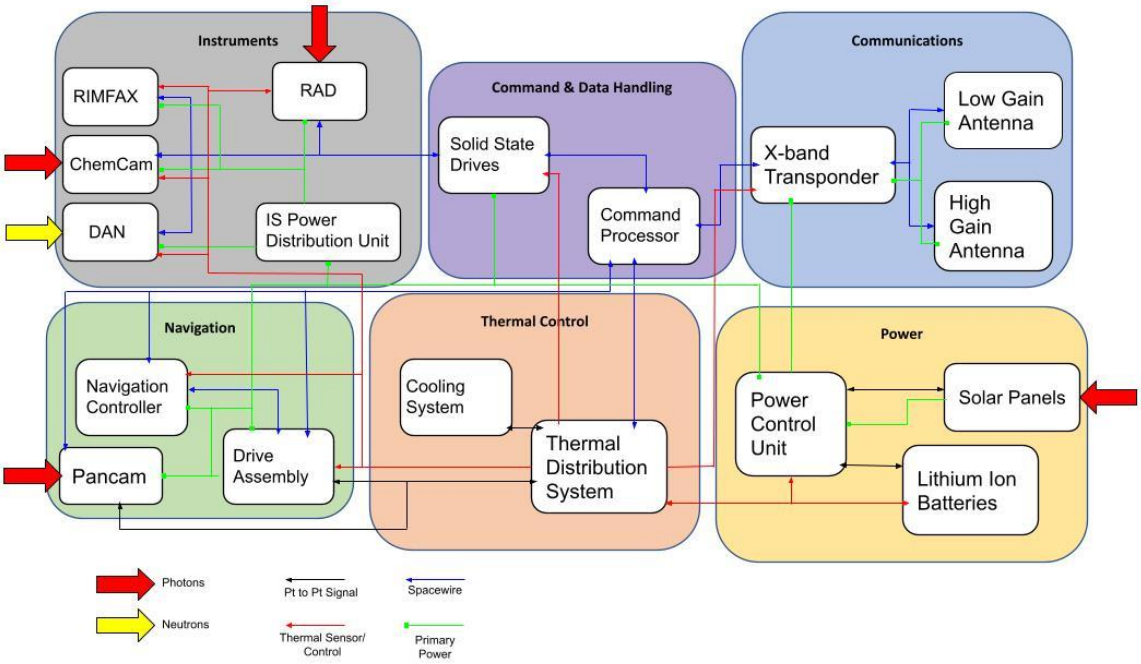

Figure 2.7: COSMOS System Block Diagram, including science instrumentation.

2.1.2. Mechanical System Overview

Req #	Requirement	Rationale	Verification Method	Relevant Subsystem	Met/Not Met
MECH-001	The wheels front two and back two wheels shall have individual steering motors.	Payload requires the ability to maneuver over uneven terrain without damaging the rover.	Inspection	Mechanical	Met
MECH-002	The wheels shall have a mass of 1.32 kg each.	The mass of the wheels must be proportionate to the mass constraint of the payload	Inspection	Mechanical	Met
MECH-003	The wheels shall have a volume of 0.006 m3 each.	The volume of the wheels must be proportionate to the volume constraint of the payload	Inspection	Mechanical	Met
MECH-004	The wheels shall maneuver over rough terrain.	The aluminum tubing is lightweight and durable to withstand the terrain.	Demonstration	Mechanical	Met
MECH-005	The springs inside the wheels shall withstand forces from maneuvering over the terrain.	The titanium material will allow the springs to withstand an immense amount of force as the payload drives over rough terrain.	Demonstration	Mechanical	Met
MECH-006	The system shall consist of four wheels	Four wheels allows the payload to maneuver in various directions while remaining upright and balanced.	Inspection	Mechanical	Met
MECH-007	The system will have a 6” rigid ring for surface egress	An aluminum rigid ring with supports will allow the lander to lower the rover with a robotic arm	Inspection	Mechanical	Met

Table 2.2: Mechanical Subsystem Requirements.

a. <u>Wheels:</u>

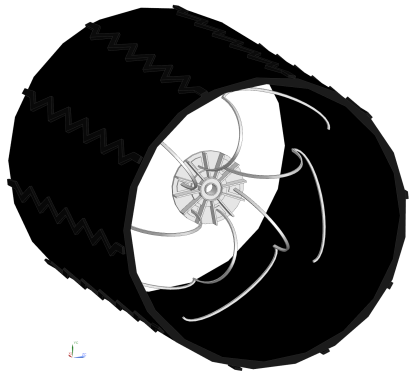

Figure 2.8: Isometric view of wheel.

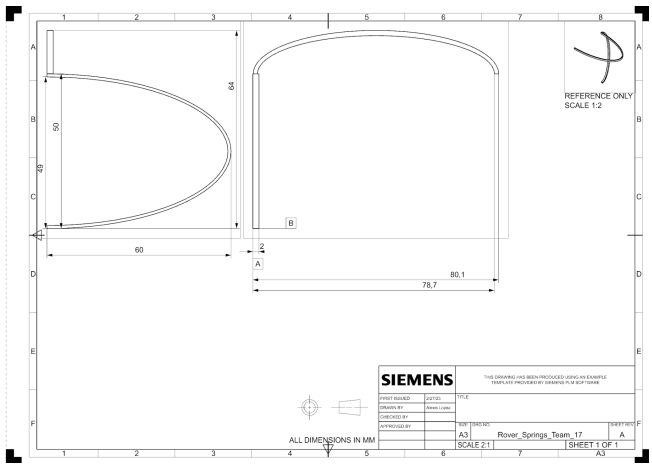

Figure 2.9: Drawing of wheel springs/tire tracks.

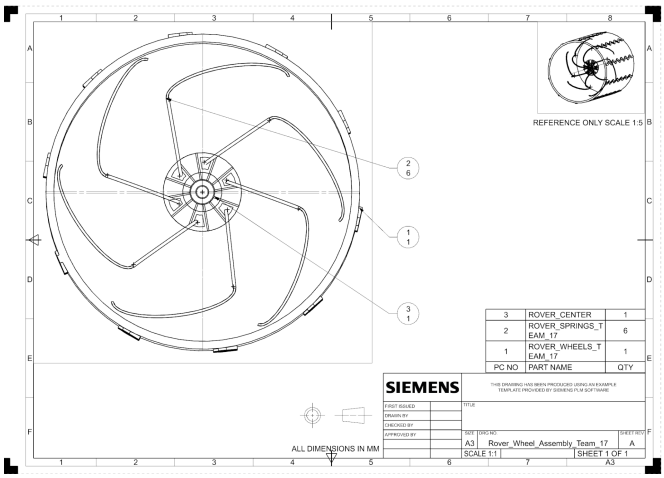

Figure 2.10: Front view of wheel showing wheel rims.

b. <u>Suspension:</u>

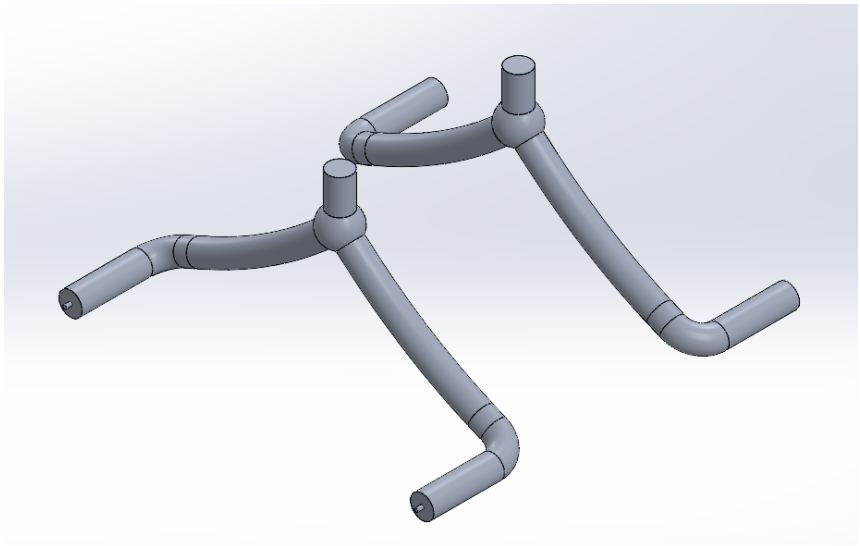

Figure 2.11: Isometric view of suspension.

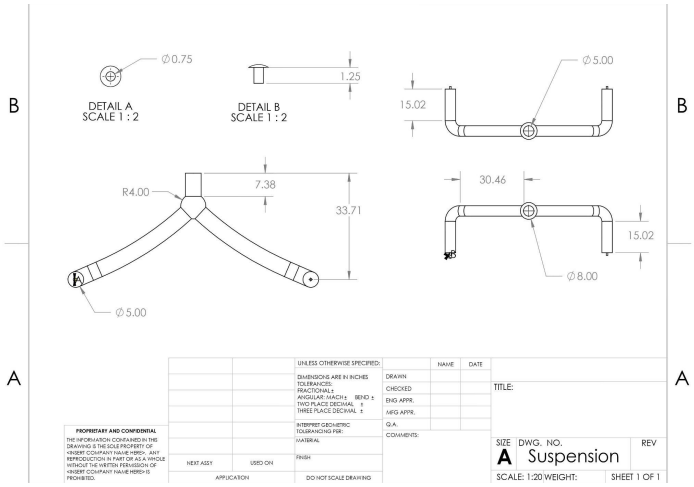

Figure 2.12: Diagram of suspension system.

Req #	Verification Method	Validation Plan
MECH-001	Shall visually confirm that the front two wheels and the back two wheels have their own steering motors.	Test the steering motors in the wheels over an analogous terrain in simulated soil beds and confirm through observation that the two front wheels and back wheels are functioning sufficiently.
MECH-002	Shall confirm the mass of each wheel through the use of mass measuring devices.	N/A
MECH-003	Shall physically measure the wheel and mathematically demonstrate that the requirement volume is true.	N/A
MECH-004	Shall demonstrate the wheel's capability over rough terrain by attaching it to the body of the rover and running trials of its movements over jagged/rough surfaces.	Limit test the wheels itself and observe how long the wheels would last over an analogous terrain in simulated soil beds for a better understanding of if the wheels can last a sufficient amount of time over a rough surface.
MECH-005	Shall run tests to observe how much force the springs inside the wheels can withstand and determine if it's sufficient enough to last on Mars surface.	Limit test the springs inside the wheels and observe the springs over an analogous terrain in simulated soil beds to see how long the springs would last over a rough surface.
MECH-006	Visually confirm the attachment of four total wheels to the rover- two on each side connected to its respective leg.	N/A
MECH-007	Visually confirm that the suspension system is directly integrated with the chassis of the rover and ensure that its tightly secured as well.	N/A
MECH-008	Shall run trials of the final product over rough terrain and observe the suspension's effect on the structural behavior of the rover over a period of time .	Run tests of the suspension system over an analogous terrain in simulated soil beds to see if the suspension system can absorb the forces over a rough surface and minimize the structural damage to the main body.
MECH-009	Visually confirm that each leg is connected to a rotating gyroscope that would be able to withstand the forces of rough terrain with minimizing any structural damage to the body.	Run tests of the suspension system with the focus of observing the gyroscope to confirm if the gyroscope moves only the legs and leaves the body still.

Table 2.3: Verification and Validation Methods.

The rover wheels including the inner springs and rims will be manufactured in house at NASA's Jet Propulsion Laboratory in Pasadena, California. The estimated time to manufacture all four wheels is six months. The wheel rims and tire will be made of aluminum while the inner springs will be titanium. Additionally, the suspension system will also be manufactured at NASA's Jet Propulsion Laboratory and be made of aluminum. The wheel system will not be constructed until the dimensions of the suspension are finalized to ensure all parts fit together. A manufacturing team consisting of six people will be required to work approximately 35 hours each week to complete the

process. Once all parts are manufactured, an assembly team will integrate each part to assemble the suspension-wheel system. This assembly will require an additionally three months and approximately 30 hours each week. Afterwards, the systems engineer will conduct proper inspection and testing of the system to ensure all parts function as expected. Further details about the inspection are outlined in the verification and validation plans.

2.1.3. Power System Overview

a. Custom Solar Panel

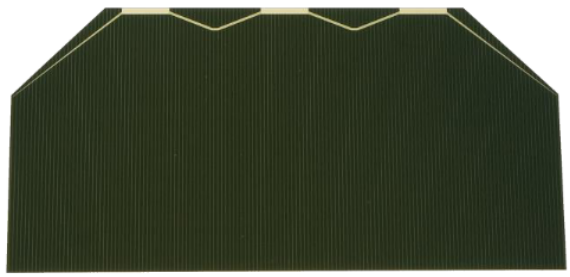

Figure 2.13: QJ Solar Cell 4G32C - Advanced. [2]

Manufacturing plan: The solar panels for the rover will be manufactured by Ibeos. Since the other hardware was from this company, it made sense to allow them to design the solar panel arrays. The cost should be around $20 million dollars for 2 panels. They will use the QJ Solar Cell 4G32C - Advanced and

construct two mirrored foldable solar panels. The cells will cover an area of 1.3175 m^2 which represents 440 individual cells. Dividing this by two gives us the number of cells per panel, 220. These panels should be manufactured within 6 months of the order.

b. Power Management System

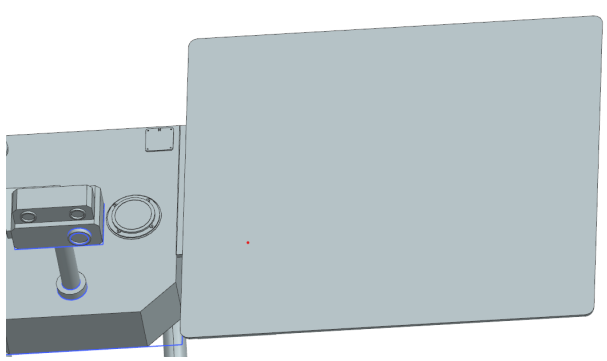

Figure 2.14: Top view of solar panel on rover.

Figure 2.15: Ibeos Modular Power system. [4]

With the capability to handle up to 500 W of power, this component will be capable of handling any power generated by the custom solar array. It comes integrated with three modules that will account for all of the rover's needs.

- Solar Array Interface Module: Regulates power generated by the solar array to be compatible with the battery module.
- Power Distribution Module: Draws power from the battery and distributes it to the spacecraft instrumentation.
- Bus Interface Module: Handles communication between the main computer and power system to allow for fault detection and constant telemetry.

c. <u>Power storage system</u>

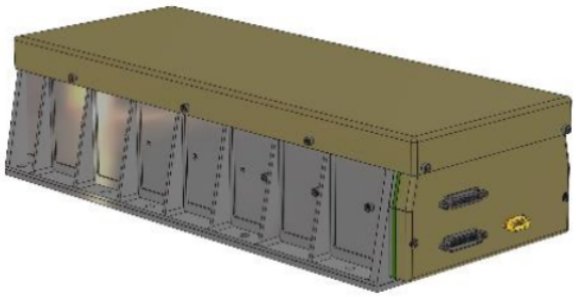

Figure 2.16: Ibeos Modular 825-Watt-hour battery. [3]

Capacity: Ibeos Modular 825-Watt-hour battery. The power system (excluding the solar panels) will be integrated into the rover body.

Power System Reqs	Component	Requirement	Verification Method	Results
EPS-001	QJ Solar Cell Panels	The solar panels will generate at least 50 W of power each Martian day	Demonstration	Power generation successful
EPS-002	Ibeos Modular Power System	The power system delivers the instrumentation and components with their required inputs	Demonstration	Power transmission successful
EPS-003	Ibeos Modular 825 W/hr Battery	The battery stores >800 W/hr and does not discharge unexpectedly	Demonstration	Power storage successful

Component	Power Budget	Percent of Total	Explanation
RIMFAX	5 to 10 W	20%	Data from previous mission
ChemCam	5 W	10%	Data from previous mission
DAN	5 W	10%	Data from previous mission
RAD	5 W	10%	Data from previous mission
PanCam	4 W	8%	Data from previous mission
CDH	10 W	20%	
Comms	5 W	10%	
TCS	5 W	10%	Use of low power heating elements
EPS	1 W	2%	
TOTAL	50 W	100%	

Table 2.4: System Power Budget.

Requirement	Component	Verification	Verification method	Verification level	Results
EPS-001	QJ Solar Cell 4G32C - Advanced	Solar cells will be demonstrated to generate at least 50 W of power.	Demonstration	Subsystem	The solar cells successfully generated 50 W during testing.
EPS-002	Ibeos Modular Power system	The power system will be supplied with varying voltages and must successfully generate the desired output voltages and currents.	Demonstration	Subsystem	The system was able to easily handle the desired voltages.
EPS-003	Ibeos Modular 825 Whr battery	The battery will be fully charged and discharged before integration to verify operation.	Demonstration	Subsystem	The battery successfully charged and discharged at the expected rates.

Table 2.5: Power System Validation methods

Requirement	Component	Validation	Validation method	Validation level	Results
EPS-001	QJ Solar Cell 4G32C Based Panel	Solar panel will be demonstrated to generate at least 50 W of power in a controlled lighting environment similar to the environment on Mars.	Demonstration	Subsystem	The solar cells successfully generated 50 W during testing in the simulated Martian environment.
EPS-002	Ibeos Modular Power system	The power system will be supplied with varying voltages while being exposed	Demonstration	Subsystem	The system was able to easily handle the desired

		to a simulated Martian environment.			voltages.
EPS-003	Ibeos Modular 825 Whr battery	The battery will be fully charged and discharged in a simulated Martian environment.	Demonstration	Subsystem	The battery successfully charged and discharged at the expected rates.

Table 2.6: Power System Validation methods (previous page).

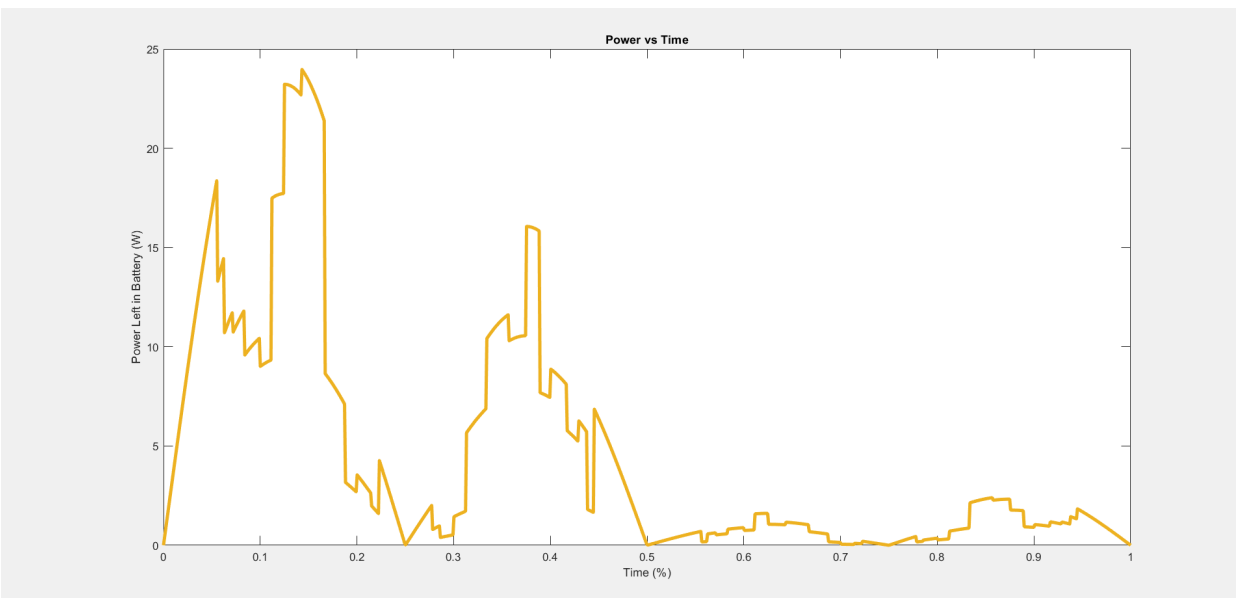

Figure 2.17: Power vs Time Plot.

- T = 0 is the beginning of a Martian day and T = 1 is the end of 1 Martian day.
- In this example, scientific instruments take data throughout the morning before finishing, and another science team begins their work in the afternoon. Little power is consumed during the night as the instruments are turned off. The small spikes in power that are seen during the night are data transmission and processing requirements.
- Solar Panel Area Calculations

  Area = Total Energy Needed / Peak Solar Irradiance / solar panel efficiency / Solar Irradiance ratio

  Area = 50 W / 593 W/m^2 / 32% / 20%

  Area needed = 1.3175 m

  Required area per solar panel = 0.8587 m

  900 mm x 810 mm or 22 rows by 10 columns of cells

With this configuration the solar panels will generate 50 W per Martian day. This is a conservative estimate and, with the 825 Whr battery, the system will easily handle the power requirements of the mission.

2.1.4. Comms and Data Handling Overview

For communication and data transfer to be successful, a subsystem will be needed to send information between earth and mars. On board, the CHD system on the rover will include an X-band radio system for communication with Earth. Signals from Earth monitor stations will travel to the Mars Odyssey and Mars Global Surveyor orbiters, then to the rover at a frequency close to 7.2 GHz, and transmits from the rover to the orbiters at a frequency close to 8.4 GHz. The primary antenna for surface operations is a High Gain Antenna (HGA), but a low-gain antenna (LGA) was also provided in case of emergencies.

a. <u>High and Low Gain Antenna</u>
   - X-band High Gain Antenna:

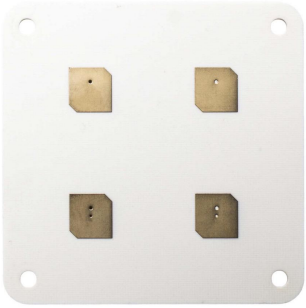

Figure 2.18: X-Band 2x2 Patch Antenna. [16]

X Band, frequency is 8025 Mhz to 8400 Mhz, Gain is 6 dBI78, Power consumption is 4W, mass is 0.0232 kg.

   - X-band Low Gain Antenna: (QHG-8G04)

Figure 2.19: QHG-8G04. [17]

X band, frequency is 7 to 8 gigahertz, reception rates are approximately 10-30 bits per second, mass is 0.16kg, dimensions are 68mm x 43mm.

b. <u>Data handling / On board computer & storage (Hardware)</u>

- Rover complete Element (RCE) - x2 (RAD750)

Figure 2.20: NASA Rover Computing Element. [18]

(RCE) contains radiation hardened memory to tolerate the extreme radiation from space and to safeguard against power-off cycles. The computers run the VxWorks real-time operating system (RTOS), and each computer's memory includes 256 kilobytes (kB) of EEPROM. There are 256 megabytes (MB) of dynamic random-access memory (DRAM) and 2 gigabytes (GB) of flash memory. The RCE computers use the RAD750 Central processing unit (CPU).The IBM RAD750 CPU can execute up to 400 Million instructions per second (MIPS).

- Transponder: IRIS V2

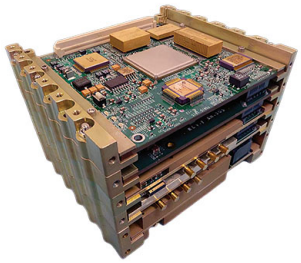

Figure 2.21: IRIS V2. [19]

The transponder performs mainly two functions. Those are amplifying the received input signal and translates the frequency of it. The system mass is 1.1 kg, power consumption is 3.8 W , and it operates with X-band: 7.1 GHz uplink, 8.4 GHz downlink.

Command & Data Handling Reqs (CDH)	Component	Requirement	Verification Method	Results
CDH-1	Low and high gain antenna	Rover shall be able to transmit information to mars orbiters.	Test	Data transmission successful
CDH-2	Low and high gain antenna	Rover shall be able to receive information from mars orbiters.	Test	Data transmission successful
CDH-3	Low and high gain antenna	Rover shall operate at a frequency of 7-8.5 Ghz.	Test	Data transmission successful
CDH-4	On board computer	On board computer shall track navigation and positioning	Test	Successful diagnostic
CDH-5	On board computer	The onboard computer shall monitor the rover's health .	Test	Successful diagnostic
CDH-6	On board computer	Shall operate at operating temperatures between -40° Celsius to +40° Celsius.	Test	Successful diagnostic
CDH-7	On board computer	Shall mitigate radiation	Test	Successful diagnostic
CDH-8	High/low gain antenna	Shall mitigate dust accumulation	Test	Successful diagnostic

Table 2.6: CDH system requirements.

Command & Data Handling Req# (CDH)	Verification	Validation Method
CDH-1	Data transmission must reach Earth station to provide chemical composition findings from samples and allow scientists to analyze this data.	The performance of antenna radiation distribution patterns for spaceflight applications will be tested at the Antenna Test Facility in electromagnetic settings that are calibrated to closely resemble free space.
CDH-2	Allow for spacecraft to receive data from Mars orbiters.	Test communication between antennas to ensure the right uplink communication is operational.
CDH-3	The right frequency is needed for successful transmission.	Test antenna for right frequencies using the Antenna Test Facility.
CDH-4	Enables the rover to make precise vertical, horizontal, and side-to-side movements.	Test rovers navigation system. Simulate with similar Mars terrain.
CDH-5	The rover computers register signs of health, like temperature and power levels, along with other features that keep the rover "alive."	Test components to similar environments to ensure data is accurate and the rover stays operating.
CDH-6	The rover should operate between -40° Celsius to +40° Celsius.	Simulate Mars environment to test temperature compatibility.
CDH-7	Rover shall mitigate radiation which can damage critical components.	Simulation that mimics radiation on mars to test the radiation-hardened central processor. (RAD 750)
CDH-8	Rover shall mitigate dust accumulation.	Simulate with a similar Mars environment.

Table 2.7: CDH Verification & Validation plans.

Potential Manufacturing/Integration Plans	Duration (Weeks)	Amount of time (hr/week)	Teams
Begin outsourcing parts from third-party manufacturers	4	45	Manufacturers
Purchase required components	2	45	Engineering Specialists
Shipping components to be sent to home base.	4	42	Engineering Members
Implementation and integration of programs and functions the rover will execute	10	45	Engineering Specialists
Inspection (data simulation)	4	42	Team Leadership
Run test trials (real time environment)	4	42	Engineering and Science Members

Table 2.8: CDH Manufacturing & Integration Plans.

The rover antenna, on board computer and transponder will be commercial off-the-shelf components. The estimated time to receive components is one month. After receiving parts, components Implementation and integration of programs and functions the rover will begin and last 2.5 months.

2.1.5. Thermal Management System Overview

Req #	Requirement	Rationale	Verification Method	Relevant Subsystem	Met/Not Met
THM01	RHUs & Internal Heaters	Heaters are located in the correct location in order to maintain subsystems in appropriate temperatures.	Inspection	Thermal	Met
THM02	Insulation of the Rover	The rover shall insulate to the levels desired/predicted by the calculations.	Inspection	Thermal	Met
THM03	The RHUs shall not exceed .50 grams and prejudice 0.8-1.0 Watts of power.	Our heating units should be standardized.	Demonstration	Thermal	Met
THM04	Rover shall operate successfully in thermal extremes.: Internal temperature shall not dip under 273K or exceed 300K.	Thermal calculations are contingent on the successful operation of thermal extremes.	Inspection	Thermal	Met

Table 2.9: THM System Requirements.

**Thermal calculations are done in order to satisfy THM04.*

Thermal Req # (THM)	Verification	Validation Method
THM01	Planning and inspecting that the RHUs are set in the correct locations.	Simulation of expected conditions: Set the rover in the extreme temperatures and test the internal temperatures of the appropriate subsystems.
THM02	Construct the appropriate coating on the rover.	Simulation of expected conditions: Set the rover in the extreme temperatures and test the internal temperatures of the appropriate subsystems.
THM03	Weigh and test the RHU.	Since the weight and power production of RHUs are constant, perform a test for calibration.
THM04	Construct the rover and make sure it is functional.	Simulation of expected conditions: Set the rover in the extreme temperatures and test the internal temperatures of the appropriate subsystems, to make sure the system operates as a whole.

Table 2.10: Verification & Validation

To initiate the thermal management of our system and generate a preliminary heat map, assessment of our ability to handle the extreme temperatures the rover will encounter is vital. The rover's anding site is expected to experience a **low temperature of 120°K (-153°C)** and a **high temperature of 273°K(0°C).** To facilitate this assessment, a rectangular prism shape is assumed and below is the provided the corresponding dimensions, along with the respective area and volume measurements:

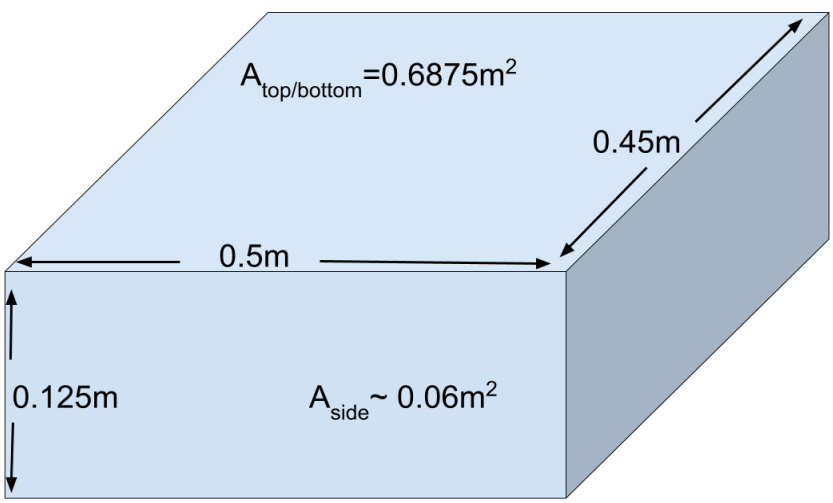

Figure 2.22: Dimensions of rover as a rectangular prism.

The optimal, safe operating **temperature of the electronics is 300°K(26°)**. This conservative estimate is chosen on purpose to leave room for error as further iterations are made and as more exact calculations are required. Using the appropriate methods, the optimal material that should best support the thermal management are:

1. Multi-Layered Insulation (MLI) wraps on all sides and the bottom (ε~0.05).
2. Paint with an emissivity value of 0.2 (ε~0.2) and absorption coefficient of 0.2 (α~0.2)

The respective calculations with the first-order heat flow map are as follows: the first illustration is for our hot extreme, and the second is for the cold extreme.

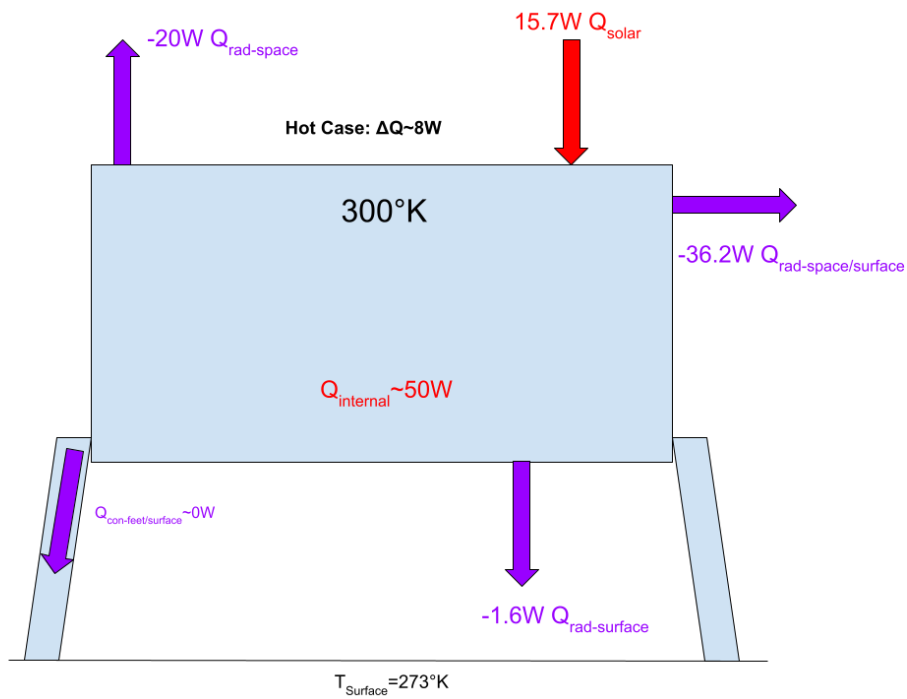

Figure 2.23: Extreme hot first-order heat flow map.

<u>Calculations:</u>

$$Q_{solar} = q_{Solar\ flux} * A * \alpha = 350 * 0.225 * 0.2 = 15.7$$

$$Q_{Internal} = 50W\ (given)$$

$$Q_{rad-space} = \sigma\varepsilon F A_{top}(T^4_{Rover} - T^4_{Space}) = 0.2 * 5.67 * 10^{-8} * 1 * 0.225 * (300^4 - 3^4) = 20.6W$$

$$Q_{rad-space/surface} = 4\sigma\varepsilon F \frac{A_{side}}{2}[(T^4_{Rover} - T^4_{Space}) + (T^4_{Rover} - T^4_{Surface})] = 36.2W$$

$$Q_{rad-surface} = \sigma\varepsilon F A_{bottom}(T^4_{Rover} - T^4_{surface}) = 1.6W$$
$$\Delta Q \sim 8.5W$$

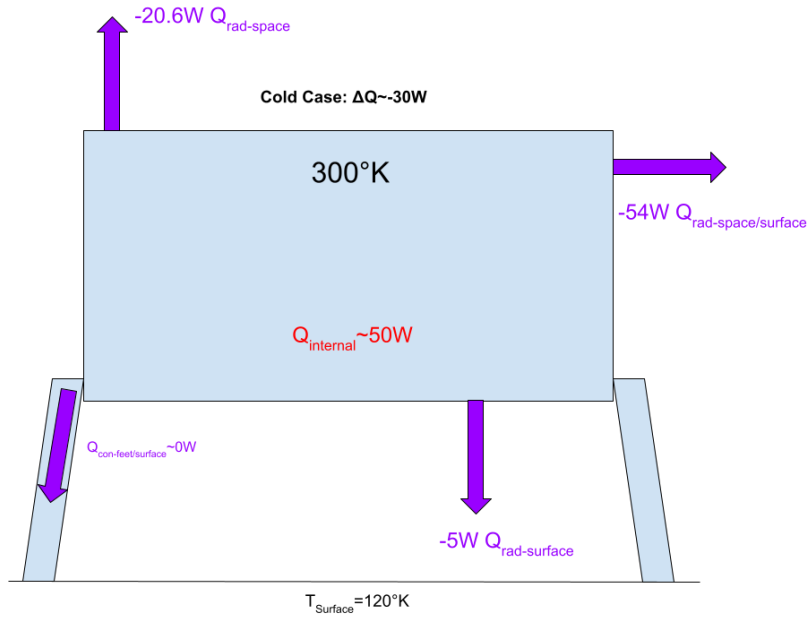

Figure 2.24: Extreme cold first-order heat flow map.

It is important to note that, for the hot extreme, we have achieved thermal equilibrium without the need for heaters or coolers. This assures operational status during the hot periods. However, for the lowest temperature, an estimated thermal requirement of 30W is required for heating, which is comparable to the amount of power required to power all the other electronics in our rover. As a result, a "hibernation" period for our rover during the Martian winter is to be considered

For the winter time, trade study has decided that Radioisotope Heater Units (RHUs) are the best components to use in order to heat the rover back to thermal equilibrium. These are small devices that provide heat through radioactive decay, and Plutonium-238 is used as the isotope for heat sources in NASA missions due to its long half-life of 87.7 years, ensuring that the decay of the isotope will not limit the mission lifetime. This technology has been extensively tested in many NASA and Roscosmos missions, reducing the risk of failure in our mission. Additionally, implementing multiple RHUs in our rover will minimize the error rate of the heating system. The design of the RHU can be found below. The RHUs are going to be placed near essential components to our mission, for example, next to the battery, near our measuring instruments, and near our mechanical components, this brings the total RHU count to about 12.

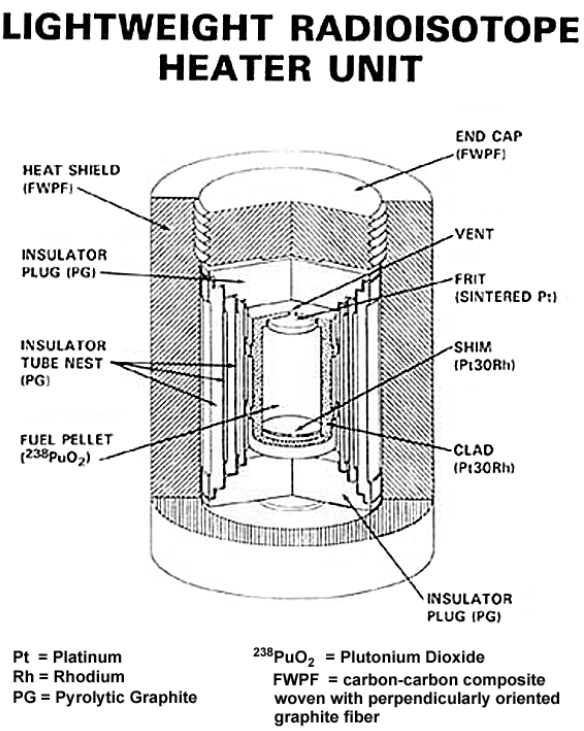

Figure 2.25: RHU diagram. [1]

Potential Manufacturing/Integration Plans	Duration (Weeks)	Amount of time (hr/week)	Teams
Begin outsourcing parts from third-party manufacturers (Through NASA)	4	40	Manufacturers
Purchase required components	2	40	Engineering Specialists
Shipping components to be sent to home base.	6	42	Engineering Members
Implementation and integration of programs and functions the rover will execute	8	45	Engineering Specialists
Inspection (data simulation)	4	42	Team Leadership
Run test trials (real time environment)	4	42	Engineering and Science Members

Table 2.11: CDH Manufacturing & Integration Plans.

2.1.6. Confidence and Maturity of Design

Mechanical: A demonstration of the rover maneuvering over analogous terrain in simulated soil beds will be conducted to prove the ability of the wheels to perform adequately on Martian soil. The current TRL is TLR 4 and the intended

TRL is TRL 6, which will be accomplished through the verification and validation plan. The wheels of the rover were modeled after similar wheels used on the Perseverance and Curiosity rovers. The rover maneuvering over a simulated terrain alongside the wheels will also focus on the suspension system. Similarly to the wheels, this design was based on the Perseverance rover's "rocker-bogie" suspension system. The durability and strength of the suspension system would be tested through verification and validation plans by running trials over different martian-soil simulated terrains.

Comms and Data Handling: Tests are performed by operating the space, ground, and relay satellite communication systems simultaneously in a manner that accurately reflects actual space-to-space and space-to-ground mission configurations. Each instrument has been used in other space missions, which in turn leads to lower risk of failure.

Thermal: The thermal calculations determined the net heat flow transfer is zero during the hot extremes. Additionally, since the RHU would not use electrical power, the rover will be able to be operational during the winter times. The RHUs have been extensively tested and have a low risk of failure. Planning to use multiple RHUs in the rover's design would further reduce the risk and introduce redundancy.

Electrical: The components were carefully analyzed to determine the best solution for power generation, management, and storage. Each part will be thoroughly tested on earth in controlled conditions to simulate the martian environment. These parts have thousands of space flight hours on them and their use in this system should pose no difficult challenges.

2.2. Recovery/Redundancy System

System	Subsystem Section	Recovery	Redundancy
Mechanical System	Wheels	None	None
	Suspension	None	None
Power System	Power generation, storage, and management	None	Multiple solar panels
Comms and	Antennas	None	Low gain antenna for

Data Handling			backup communication.
	On board computer	None	Back up on board computer in case of any failure/troubleshooting.
Thermal Management Systems	RHUs/Insulation	None	12 RHUs, electrical heaters used in case of a problem/hibernation mode.

Table 2.12: Recovery/Redundancy of payload subsystems.

2.3. Payload Integration

The science instruments include the PanCam, ChemCam, DAN, RAD, and RIMFAX. The DAN is housed within the frame. The RIMFAX is located on top of the frame, centered at the rear of the rover with the scanner hanging off. The RAD is also on top of the frame at the rear on the left side of the rover. The ChemCam is on top of the frame's mast. The PanCam is mounted on top of the ChemCam. Each of these devices interface electronically with the system computer housed within the body of the rover.

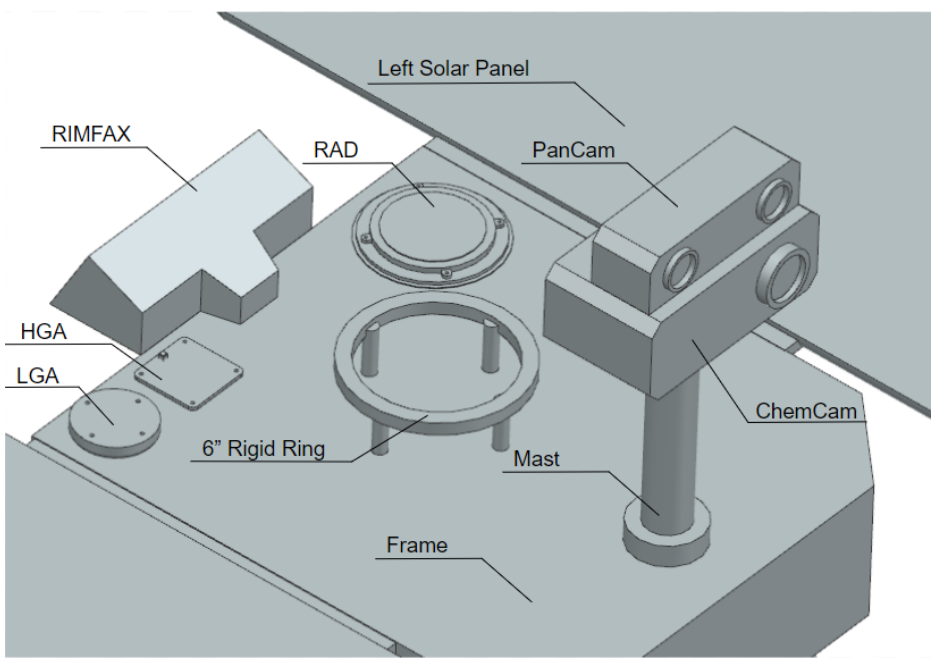

Figure 2.26: Overall view of Science Instrumentation on rover.

3. *Payload Design and Science Instrumentation*

3.1. Selection, Design, and Verification

3.1.1. System Overview

The COSMOS payload includes the following subsystems: Command & Data Handling, Communications, Navigation, Thermal Control, and Power. Additionally, it utilizes instrumentation including RIMFAX, RAD, DAN, ChemCam, and PanCam to fulfill the chosen science objectives detailed in Section 3.2.1. A full detailed description of the instruments and their features can be found in Section 1.4. The RAD, ChemCam, and PanCam absorb and emit photons, while the DAN operates with neutrons. The instrumentation and the primary features of the payload subsystems, as well as their connections, can be found in the block diagram below.

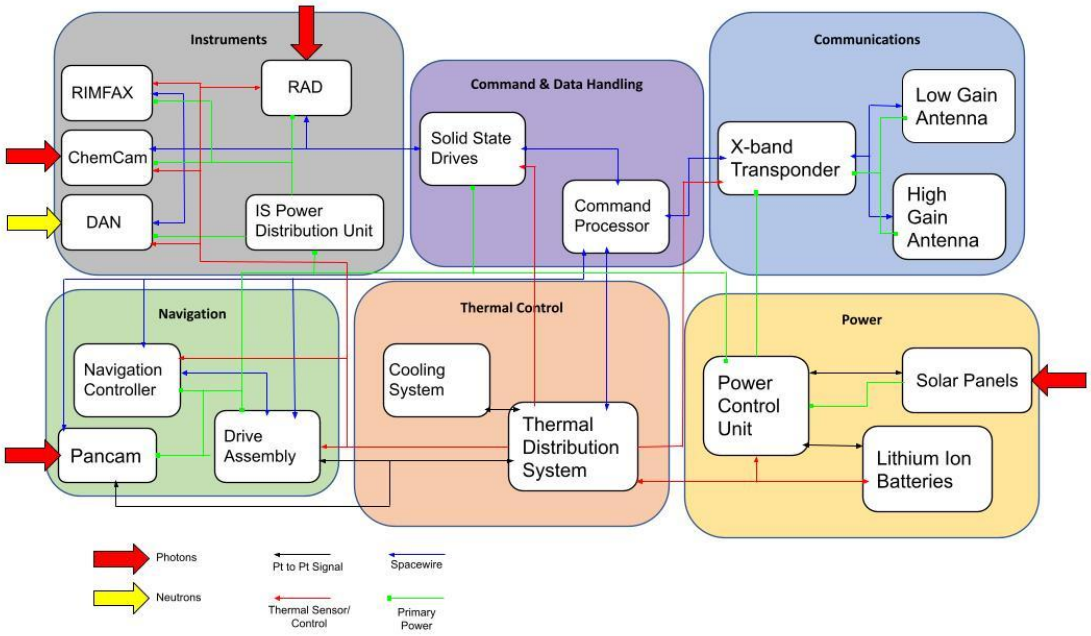

Figure 3.1: COSMOS Block Diagram showing the payload and instrumentation connections.

To meet the top-level science requirements outlined on the Science Traceability Matrix (STM), the instrumentation must collect congruent data. RIMFAX gives information on the soil composition and density by scanning underground geological features, and the

ChemCam builds on this information by revealing the chemical composition on the surface above and around the area scanned by RIMFAX. Furthermore, DAN can then scan the same area as RIMFAX and find the water content as low as 1/10th of one percent below the surface. Finally, RAD completes a scan of the atmosphere above the tested area to determine the radiation levels above the surface. This will allow scientists to determine if radiation on the surface impacts the chemical composition below, which will provide information about why water stayed on Earth's surface but disappeared on Mars. The current model of the COSMOS payload meets all of the outlined requirements and science objectives for this mission. The science instrumentation will interact and collect congruent data. The chosen payload design will transport this instrumentation and keep it at ideal temperatures while it traverses the Martian landscape and collects data. The Communications and Data Handling subsystem will allow COSMOS to transmit this data to Earth. This process will be repeated as needed to achieve a high confidence in the data. For these reasons, it is believed that the chosen instrumentation will provide the information needed to determine what chemical and physical processes form and modify layers on Mars, as well as deliver additional information on the presence of water.

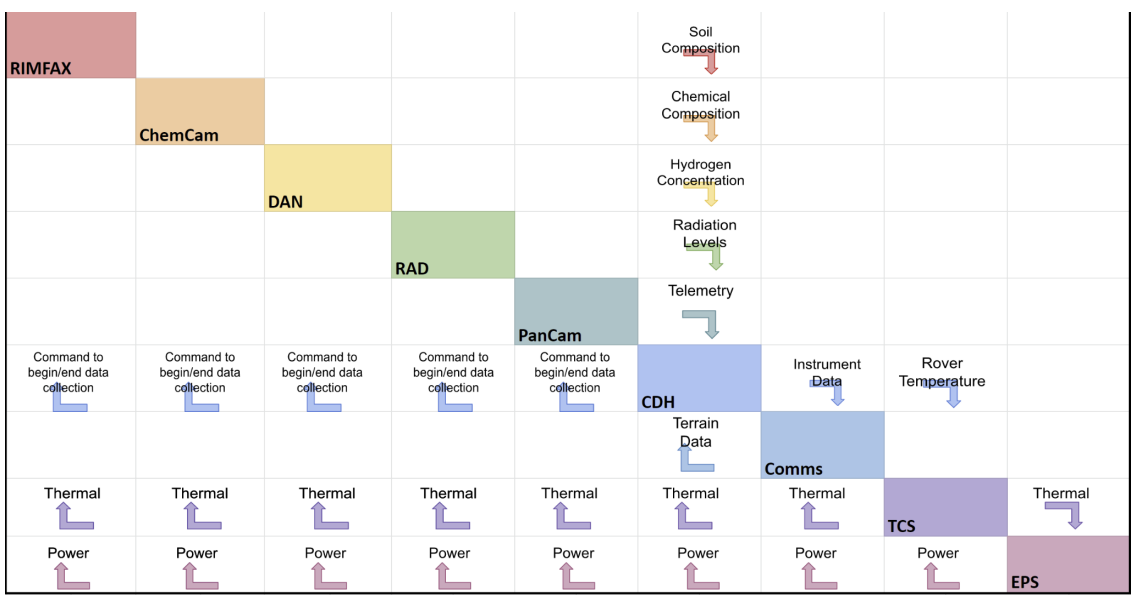

Figure 3.2: N² diagram for COSMOS, showing the subsystem and instrumentation interaction

3.1.2. Instrument Evolution

Instrument	Initially Considered	Reason for Maintaining	Reason for Removing	Trade Studies Performed	Factors/Criteria Considered in Selection
Radar Imager for Mars' Subsurface Experiment (RIMFAX)	No			RIMFAX Weight: 3 kg Destruction Level: None Redundancy Offered: Partial (DAN) Power Usage: 5-10 watts Heritage: Used on Perseverance	RIMFAX provides partial redundancy for the DAN instrument by reading geological features including ice deposits below the surface at a depth of up to 30 ft.
Dynamic Albedo of Neutrons (DAN)	No			DAN Weight: 2.6 kg Destruction Level: None Redundancy Offered: Primary source Power Usage: 14 watts Heritage: Used on Curiosity	DAN reads the velocity of displaced neutrons from within the ice deposits due to radiation. Hydrogen slows the neutrons, so lower velocities correspond to high water concentrations. This is a non-destructive device that saves weight and power while measuring H2O concentrations within the deposits.

<table>
<tr>
<td>Radiation Assessment Detector (RAD)</td>
<td>Yes</td>
<td>The surface level radiation reading that RAD provides allows us to see how the albedo of the reflective polar caps affects radiation levels for potential manned missions at the caps. The radiation reading the RAD provides can also be used to support the DAN instrument in measuring the displaced neutrons due to radiation within the deposits.</td>
<td></td>
<td>
<table>
<tr><th colspan="2">RAD</th></tr>
<tr><td>Weight</td><td>1.56 kg</td></tr>
<tr><td>Destruction Level</td><td>None</td></tr>
<tr><td>Redundancy Offered</td><td>None</td></tr>
<tr><td>Power Usage</td><td>Low</td></tr>
<tr><td>Heritage</td><td>Used on Curiosity</td></tr>
</table>
</td>
<td>RAD was initiated to determine how albedo of PLD affects the radiation experienced by the machine. In addition to this, RAD now supports the DAN by measuring the radiation levels which displace the neutrons. This way, the crew can determine what the initial radiation levels are which can be used to predict the displacement velocities of the neutrons.</td>
</tr>
</table>

<table>
<tr>
<td>Pancam</td>
<td>Yes</td>
<td>An optical camera provides a visual image that enables navigation of the rover over the terrain from controls back on earth.</td>
<td></td>
<td>
<table>
<tr><th colspan="2">Pancam</th></tr>
<tr><td>Weight</td><td>0.54 kg</td></tr>
<tr><td>Destruction Level</td><td>None</td></tr>
<tr><td>Redundancy Offered</td><td>Partial (view geography at surface)</td></tr>
<tr><td>Power Usage</td><td>13 watts</td></tr>
<tr><td>Heritage</td><td>Used on Opportunity</td></tr>
</table>
</td>
<td>PanCam provides the means of navigation. Without this optical camera, navigation would be blind which would result in a minimal area which the rover could cover.</td>
</tr>
<tr>
<td>ChemCam</td>
<td>No</td>
<td></td>
<td></td>
<td>
<table>
<tr><th colspan="2">ChemCam</th></tr>
<tr><td>Weight</td><td>0.5 kg</td></tr>
<tr><td>Destruction Level</td><td>Partial (vaporizes rock)</td></tr>
<tr><td>Redundancy Offered</td><td>DAN/RAD</td></tr>
<tr><td>Power Usage</td><td>5-10 watts</td></tr>
<tr><td>Heritage</td><td>Used on Perseverance</td></tr>
</table>
</td>
<td>ChemCam provides redundancy for the PanCam as well as for the DAN. ChemCam enables a reading of chemical composition of physical features by vaporizing the surface of the feature with a laser and then focussing a spectrometer on the area to measure the plasma light's wavelengths. This redundancy allows measurements of the surface of the deposits while also providing detecting physical formations and their distances relative to the rover that could prove to be obstacles for the rover’s travel.</td>
</tr>
</table>

<table>
<tr><td>Drill Arm</td><td>Yes</td><td></td><td>The drill on previous rovers contributed to a significant portion of the mass of the machine. Working within the confinements of 30 kg, we chose to replace the drill with DAN to make room for other instruments and to enable mobility.</td><td><table><tr><th colspan="2">Drill Arm</th></tr><tr><td>Weight</td><td>Mass of entire arm and bits</td></tr><tr><td>Destruction Level</td><td>High (drilling into terrain)</td></tr><tr><td>Redundancy Offered</td><td>Replace DAN/RAD pairing with CheMin</td></tr><tr><td>Power Usage</td><td>High wattage</td></tr><tr><td>Heritage</td><td>Used on Perseverance</td></tr></table></td><td>Not Selected.</td></tr>
<tr><td>CheMin (Chemistry and Mineralogy instrument)</td><td>Yes</td><td></td><td>Similar to the drill, the CheMin would result in complicated engineering with additional mass. Since we are primarily measuring water content, the DAN also replaces this feature.</td><td><table><tr><th colspan="2">CheMin</th></tr><tr><td>Weight</td><td>High and voluminous (size of laptop in carrying case)</td></tr><tr><td>Destruction Level</td><td>High (in congruence with drill arm)</td></tr><tr><td>Redundancy Offered</td><td>Replace DAN/RAD pairing with Drill Arm</td></tr><tr><td>Power Usage</td><td>High</td></tr><tr><td>Heritage</td><td>Used on Curiosity</td></tr></table></td><td>Not Selected.</td></tr>
</table>

Table 3.1: Evolution of Instrumentation including criteria considered during selection.

Table Description:

- In the table above, the instrument in question is listed on the first column of each row.
- In the second column, the consideration of the instrument is stated as either being an initially considered instrument or one that was decided upon following the initial discussion.
- The third column only applies to those instruments that were initially considered and were maintained in the final design; this column provides the reason for maintaining the instrument.
- The fourth column only applies to those instruments that were initially considered and were removed from the final design; this column provides the reason for removing the instrument.
- Trade studies which determined the criteria and reasons for removing, maintaining, or adding an instrument are located in the fifth column. Red highlight corresponds to negative quality. Green highlight corresponds to favorable quality. Yellow highlight is between the two.
- In the sixth column, factors and criteria that qualified the instrument to be used in COSMOS are listed for each instrument within the row.

3.1.3. Subsystem Overview

Radar Imager for Mars' Subsurface Experiment (RIMFAX):

The Radar Imager for Mars' Subsurface Experiment uses radar waves to probe the ground under the rover. It weighs approximately 3 kg and has a volume of 196 x 120 x 66 millimeters. RIMFAX requires 5 to 10 watts of power and returns 5 to 10 kilobytes per sounding location and can detect ice, water or salty brines of more than 10 meters beneath the surface of Mars. (3kg)

Dynamic Albedo of Neutrons (DAN):

The DAN looks for telltale changes in the energies of neutrons released from Martian subsurfaces that indicate how much water is chemically bound in the soil or rocks and sits on the aft-port-side of the rover's body. It measures subsurface hydrogen up to one meter below the surface and can detect water as low as 0.1%. (2.6 kg)

Radiation Assessment Detector (RAD):

The Radiation Assessment Detector measures the type and amount of harmful radiation that reaches the Martian surface from the sun and space sources. The detector sits on the rover's deck and faces toward the sky. It is approximately 1.56 kg and about the size of a small toaster. (1.56 kg)

Pancam:

The Panoramic Camera uses two cameras to take detailed, multi-wavelength, 3-D panoramic pictures of the Martian landscape surrounding the rover. Each camera weighs approximately 270 grams each and requires 3 watts for the CCD and electronics and 3.5 watts for a small warmup integrated heater. The cameras utilize 8 filters per eye cover 400-1100 nm, allowing full-color, 1024 x 1024 pixel images and spectral analysis of minerals and the atmosphere. The separation between the two cameras is approximately 30 centimeters. (0.54 kg)

ChemCam:

The ChemCam utilizes its laser, camera, and spectrograph to identify the chemical and mineral composition of rocks and soils. The laser, telescope and camera will sit on the rover's mast while the spectrometer sits in the body. While the telescope focuses the laser and camera, the laser vaporizes rock surfaces, creating a plasma of their component gases from areas smaller than one millimeter. Once the laser has completed this task, three spectrographs divide the plasma light into wavelengths for chemical analysis. This instrument uses two major subsystems: Remote Micro-Imager (RMI) subsystem, provides context images in visible light of target area sampled by Laser Induced Breakdown Spectrometer (LIBS) system or can be used to provide narrow FOV images of other targets of interest and the

LIBS subsystem, provides LIBS spectra over the wavelength range from UV to VNIR of selected targets and can also be used for passive spectroscopy of selected targets. (0.5 kg)

The X-Band High Gain Antenna:

The X-Band High Gain Antenna is a powerful communication system that relays important data and receives directions to/from Earth. The system utilizes X-band radio waves to shoot a beam to Earth's antennas as a way to transmit data. (2.2 kg)

Solid State Drives (SSDs):

These are several drives that hold important data available to be transmitted to Earth. They are optimal as they can operate and store data at temperatures from -40 C to 85 C. Since Mars can be much colder, the survival of the SSDs depends on the thermal control system.

Thermal Note:

All subsystems (except PanCam), will be kept at thermal equilibrium using strategic placement of RHUs.

Solar Panels:

The solar panels will be made of QJ 4G32C Solar Cells and will provide the rover with around 50 W of power each Martian day. The solar panels will be manufactured by Ibeos and will be constructed to the strictest Martian standards.

Power Management System:

The power management system (PMS) will be a Ibeos Modular Power System. This will give the engineers the desired flexibility and tailorability required for this Marian mission. The PMS will have the capability to detect power requirements and correctly allocate power where it is needed. This will greatly improve the efficiency of the system as components can be deactivated when they are not in use.

Battery:

The battery used will be a Ibeos Modular 825 Whr Battery. This battery is easily capable of storing the required amount of power required for the mission life and its large capacity will account for some solar panel inefficiencies.

3.1.4. Procurement Plan

Instrument/Part	Type	Base Price	Additional Costs	Final Price	Schedule for Delivery
Radar Imager for Mars' Subsurface Experiment (RIMFAX)	Heritage Component	$5,566,812.00	Manufacturing Cost $8,000,000.00 Testing Facility Cost $2,000,000.00	$15,566,812.00	31.0 Months
Dynamic Albedo of Neutrons (DAN)	Heritage Component	$9,382,620.00	Manufacturing Cost $13,000,000.00 Testing Facility Cost $4,000,000.00	$26,382,620.00	30.8 Months
Radiation Assessment Detector (RAD)	Heritage Component	$3,446,998.00	Manufacturing Cost $4,000,000.00 Testing Facility Cost $1,000,000.00	$8,446,998.00	28.3 Months
Pancam	Heritage Component	$1,590,996.00	Manufacturing Cost $3,000,000.00 Testing Facility Cost $1,000,000.00	$5,590,996.00	25.7 Months
ChemCam	Heritage Component	$1,079,472.00	Manufacturing Cost $2,000,000.00 Testing Facility Cost $1,000,000.00	$4,079,472.00	24.2 Months
Totals		$21,066,898	$39,000,000	**$60,066,898**	**31.0 Months**

Table 3.2: Science Instrumentation Procurement Plan with prices and manufacturing times.

3.1.5. Verification and Validation Plan

Requirement	Component	Verification Requirement	Verification method	Verification Level	Results
MR-002	Radar Imager for Mars' Subsurface Experiment (RIMFAX)	The RIMFAX shall be verified by demonstration on Perseverance Rover. The demonstration shall include the reading of subsurface features. The demonstration shall be considered successful if the range of features detected extend up to 10 meters deep and are accurately identified.	Demonstration	Subsystem	RIMFAX detects rock layers and subsurface features based on the radar waves that are reflected back up to the rover from Jezero Crater. The data has provided “shapes, densities, thicknesses, angels, and compositions” according to David Paige, deputy principal investigator for Perseverance’s RIMFAX. The features of these objects are detected at depths of up to 15 meters. The performance on the demonstration qualifies this component.
MR-001	Dynamic Albedo of Neutrons (DAN)	The DAN shall be verified by demonstration on the Curiosity Rover. The demonstration shall include the accurate measure of energy change in neutrons at a depth of no less than 1 meter. The demonstration shall be considered successful if the energy of neutrons is substantially less when interacting with hydrogen atoms.	Demonstration	Subsystem	DAN accurately reads the decrease in energy of reflected neutrons. DAN proved capable of detecting the ratio of energy returning neutrons to that of the initially fired neutrons and is able to determine the amount of hydrogen present via this ratio. The amount of hydrogen can then be extrapolated to water molecules, thereby providing the relative amounts of water within a meter of the surface.
MR-001	Radiation Assessment Detector (RAD)	The RAD shall be verified by demonstration on the Curiosity Rover. The demonstration shall include the reading of martian radiation in two differing locations. The demonstration shall be	Demonstration	Subsystem	RAD accurately reads a higher level of radiation when in an unsheltered position. RAD reads a radiation decrease of 4% when sheltered by the martian regolith of a cliff according to a research article from July of 2021, titled “Natural Radiation Shielding on Mars Measured with the MSL/RAD

		considered successful if the radiation reading in an unsheltered position is substantially greater than the position sheltered by regolith.			Instrument". This verifies the functionality of the RAD instrument.
PAY-001	Pancam	The Pancam shall be verified by demonstration on the Opportunity Rover. The demonstration shall include the visual optics relayed back to earth to navigate the rover. The demonstration shall be considered successful if the image returned to earth displays a clear, uncorrupted view of the rover's surroundings	Demonstration	Component	Pancam successfully captures clear, navigable images that are relayed back to earth. The images display horizons, skies, and detailed views of the surface of Mars. Such an image was captured by NASA's Opportunity Rover on June 04, 2019 that, after processing the data, displayed a surface of gravel, sand, and jutting rocks near the rover.
PAY-001	ChemCam	The ChemCam shall be verified by demonstration on the Curiosity Rover. The demonstration shall include the ionization of rock samples via lazer and the spectrography reading of the plasma. The demonstration shall be considered successful if the spectrograph identifies the free-floating ions released by the lazer from up to 7 meters away.	Demonstration	Component	ChemCam properly plasmates rock into ionized gas. The spectrograph is then able to provide a reading on the composition of the rock sample. The ChemCam aboard the Curiosity Rover has accurately analyzed over 1,500 samples of rock and soil of the Martian surface.
CDH-001, CDH-003	X-Band High Gain Antenna	The X-Band High Gain Antenna shall be verified by demonstration on the Voyager spacecraft. The demonstration shall include the relay of information over the vacuum of space. The demonstration shall be	Demonstration	System	X-Band High Gain Antenna properly conveys data from outer portions of the solar system to Earth from Voyager spacecraft. The Voyager spacecraft has conveyed data the greatest distances of any man made system.

		considered successful if the transmission of data is received over a distance greater than 250 million miles (greatest distance between Mars and Earth during orbit).			
CDH-002	Solid State Drives (SSDs)	The SSD shall be verified by demonstration on the Opportunity rover. The demonstration shall include the retainment of information collected from the scientific instruments. The demonstration shall be considered successful if the storage of information is maintained throughout the expected lifespan of the rover.	Demonstration	System	The SSD properly stores memory for the appropriate lengths of time. The SSD on Opportunity lasted until year 10 until failing; the expected lifespan of the rover was 3 months. This is nearly 400 times longer than the SSD was required to survive.

Table 3.3: Verification Requirements Matrix.

Validation Product Identifier		Activity	Objective	Validation Method and Facility/Lab Location	Results
MR-002	Radar Imager for Mars' Subsurface Experiment (RIMFAX)	RIMFAX shall measure the physical structure and chemical composition of three pre constructed subsurface features at 20 m depth in external temperature as low as 120 K with margin of error 5%.	Determine accuracy of RIMFAX at a depth of 20 meters	Test at JPL	RIMFAX performed within the predetermined 5% error. The pre constructed subsurface feature's chemical composition and physical structure were correctly identified.
MR-001	Dynamic Albedo of Neutrons (DAN)	DAN shall measure the velocity of neutrons displaced by a bombardment of radiation for 60 seconds at concentrations equal to levels experienced by the martian surface. Neutrons will travel through 5 ft of a mix of regolith and frozen H2O. Calculations based on the measured neutrons' velocities will then be conducted to determine the number of hydrogen atoms present. This will provide for a reasonable prediction of H2O in the mix within 5% of the existing H2O.	Determine accuracy of DAN when measuring a mix of H2O deposits mixed with dust particles and regolith at a depth of 5 ft	Test at JPL	DAN performed within the predetermined 5% error. The amount of H2O present in the mock deposits was calculated within 5% of the actual amount present.
MR-001	Radiation Assessment Detector (RAD)	RAD shall measure radiation levels when exposed to radiation levels equal to those experienced by the martian surface. The radiation will be projected at an angle of 30° to the surface of the RAD to imitate the angle of incidence of the sun when at the extreme latitudes. The RAD shall measure within an accuracy of 3% that of the radiation output.	Determine accuracy of DAN when measuring radiation levels at an angle of projection to the sensor of 30°	Test at Southwest Research Institute Boulder, Colorado	RAD performed within the predetermined 3% error. The level of radiation was accurately read within 3% of that experience by the Martian surface
PAY-001	Pancam	Pancam shall accurately display a visual image to the operator of the craft at external temperature of 120K	Ensure function of Pancam at low temperatures	Test at JPL	Pancam performed appropriately, displaying a high quality resolution feed without fogging or error

PAY-001	ChemCam	ChemCam shall vaporize a spot on the frozen H2O feature, a regolith feature composed primarily of silicon, and an iron feature. The ChemCam will then spectrograph plasma's light to determine the chemical composition of the vaporized feature. This will be read within 5% error at a distance of 5 meters.	Determine accuracy of the ChemCam on features with a differing chemical composition at a distance of 5 meters	Test at Los Alamos National Laboratory, Los Alamos New Mexico	ChemCam performed within the predetermined 5% error. The chemical composition of H2O, Silicon, and Iron were accurately identified at a distance of 5 meters.
CDH-001, CDH-003	X-Band High Gain Antenna	X-Band High Gain Antenna shall transmit data at a predetermined wavelength for 3 lengths of time. The function is pass or fail.	Ensure function of Antenna at low temperatures	Test at JPL	The antenna transmitted the data at the appropriate wavelengths for the appropriate lengths of time
CDH-002	Solid State Drives (SSDs)	Solid State Drive shall store information at a temperature of 233K (internal system) and allow proper retrieval of the data. The function is pass or fail.	Ensure function of SSD at low temperatures	Test at JPL	The data was stored and retrieved at the predetermined, internal temperature

Table 3.4 Validation Requirements Matrix

3.2. Science Value

3.2.1. Science Payload Objectives

Overall objective: Evaluate Mars' climate history, explore the possibility of life, and achieve these goals by studying the composition of the polar ice caps and measuring surface radiation.

Science Goals

1. Determine the percent composition of H2O ice as the layers deepen.
    - Finding if Mars could have sustained life in the past. Understanding the time period when H2O was more prevalent would indicate the presence of microbial life.
    - Detect water content up to 1/10th of one percent up to three feet below the surface of the polar ice deposits, which will allow us to see about 91 years into the past.
2. Examine geologic features below the surface to determine the physical processes that may have formed the layers and see the differences with increased depth.
    - See geologic features under the surface with ground-penetrating radar up to 30 meters deep every four inches along the rover track.
    - Use geologic information to observe and predict the physical processes that may have formed the layers over thousands of years.
3. Measure radiation levels in the atmosphere above the polar ice deposits.

- Use the radiation measurement to determine how the insulation of the top layer to Martian radiation affects the composition of the protected sublayers.
- Measure galactic cosmic rays and solar particles that pass through the Martian atmosphere and assess the hazard presented by radiation to potential microbial life. The values are given in dose rate per time.

3.2.2. Science Traceability Matrix

Science Goals	Science Objectives	Science Measurement Requirements		Instrument Performance Requirements		Predicted Instrument Performance	Instrument	Mission Requirements
		Physical Parameters	Observables					
Support advancement of human knowledge on astrobiology and possibility of sustaining life on Mars by studying the compounds and elements contained in the polar ice caps. This will be done by analyzing the chemical composition and geologic formation of the layers at different depths.	Determine the percent of H2O ice prevalent as the layers deepen.	Determine the amount of H2O below the surface within a 10 meter distance into the surface.	Mass of H- and OH- bearing materials	Water level detection sensitivity:	±1% (of mass)	As little as 0.1%	Dynamic Albedo of Neutrons (DAN)	The vehicle shall maintain instrument position distance of 2.6 feet from the measurement target (when all instruments are in use).
				Neutron penetration depth:	3 cm	Neutrons travel 1 meter (3 feet) below surface		Rover shall collect a minimum amount of 15 samples for data scan taken from 10 different scan depths.
	Examine geologic features below the surface to determine the physical processes that may have formed the layers and see the differences with increased depth.	Scan the landscape below the surface at every 1 meter at 5 meter depths to compare features.	Black and white scans of the subsurface geological features	Vertical scan resolution:	10 cm	10-15 cm	RIMFAX	
				Horizontal scan resolution:	40 cm	30-60 cm		
				Penetration depth (radar):	1 m	Up to 10 m		The vehicle shall land within 5 km of chosen site in the Martian Polar Layered Deposit.
				Radar scan measurement intervals:	Every foot traveled	Every 10 cm on rover track		

	Measure radiation levels in the atmosphere above the polar ice deposits.	Use the radiation measurement to determine how the insulation of the top layer to Martian radiation affects the composition of the protected sublayers.	Level of radiation found in the atmosphere and impact it has on the visible surface conditions of Mars' polar ice deposits	Radiation events recorded:	500 Events/ sec	5000 Events/sec	RAD	RAD shall accurately measure radiation over a period of 20 minutes above each stop along the chosen path at chosen site in the Martian Polar Layered Deposit.
				Radiative charged particle detection sensitivity:	100 keV/μm	From 0.3 to 1000 keV/μm absorbed dose		

Table 3.5: Science Traceability Matrix (STM) for COSMOS.

3.2.3. Payload Success Criteria

Require-ment	Component	Success Criteria	Worst Case Quantifiable Metrics	Failure Modes	Significance to mission objectives
MR-002	Radar Imager for Mars' Subsurface Experiment (RIMFAX)	Analyses the ground beneath rover to create map with distinguishable details	<10 cm resolution for underground maps	Antenna failure, power loss	Allows rover to detect water and subsurface structures.
MR-001	Dynamic Albedo of Neutrons (DAN)	Detects hydrogen atoms beneath the surface	Detects >30% of expected neutrons	Calibration failure	Allows the rover to scan for water molecules which contain hydrogen.
MR-001	Radiation Assessment Detector (RAD)	Detects accurate atmospheric radiation	Detects >30% of expected radiation	Electrical failure, calibration failure	Analyzing the incoming radiation may prove useful in determining SSD and electronics failures.
PAY-001	Pancam	Captures high resolution images of Mars surface	<75% of image is obscured by debris	Focus issues, lens damage	Optical images will allow the rover to navigate its local area safely and with confidence.
PAY-001	ChemCam	Correctly identifies Mars surface composition	Identifies >25% of selected surface samples	Calibration issues, laser failure	Studying the surface composition will give scientists more information for determining how Mars formed and what has happened since then.
CDH-001 , CDH-003	X-Band High Gain Antenna	Transmits at 2 Mbps to orbiters	Transmits data at a rate >10 kbps	Electrical failure	Without the antenna, transmission of critical data would be impossible.

CDH-002	Solid State Drives (SSDs)	Successfully stores mission data for a critical length of time	Internal data transfer rates of >2 Mbps	Radiation interference, exposure to elements	Before transmission, data requires secure and reliable storage.

Table 3.6: Payload Success Matrix.

3.2.4. Experimental Evolution and Logic, Approach, and Method of Investigation

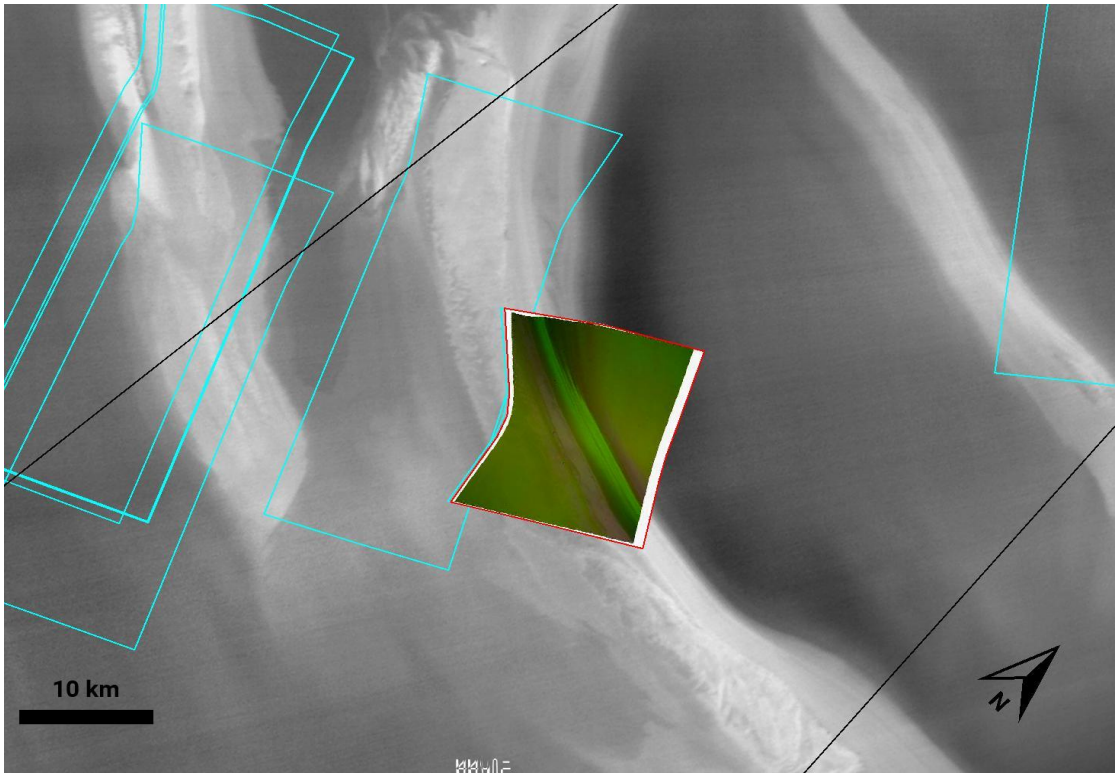

Figure 3.3: Selected data collection site on Mars Polar Layered Deposits. The coordinates of this spot are 84.7°N 214.2°E.

Previous Mission Objectives:

- Analyze amount of CO2 within the PLD: Determine the significance of CO2 within ancient martian atmosphere by measuring abundance of CO2 molecules deposited in the PLD
- Analyze type and amount of molecules aside from H2O and CO2: Determine the ancient composition of the Martian atmosphere and the way the composition evolved as the atmosphere was stripped.
- Introduce isolated bacterial colonies to the martian environment: Subject bacterial colonies to a specific martian environmental stressor to see how the colony survives compared to the control.

- Measure levels of radiation at surface: Determine how radiation bombardment at the surface of the PLD may protect the insulated layers.

Final Mission Objectives:

- Determine presence of H2O ice in the PLD: Higher concentrations of H2O in PLD correspond to higher composition of H2O in the ancient martian atmosphere. This will provide knowledge of the prevalence of H2O on ancient Mars and how similar this environment may have been to Earth.
- Determine geological features under the PLD: This will provide explanations to the shape of the features and the reason for the physical formation of the layers. Such an understanding will aid in explanation for the physical form and eliminate queries regarding inconsistencies in what may be expected.
- Determine levels of radiation: Provide an initial reading of radiation from the sun. This will serve to provide an expected range of readings from the DAN which reads velocity of neutrons reflected back up from within the PLD. The velocity of neutrons is affected by hydrogen atoms.

Objective Evolution:

The determination of the presence of H2O in the PLD replaced the objectives of determining presence and amount of CO2 and various other molecules. This evolution to place as the primary goal is to determine the image of ancient terrestrial Mars. A significant presence of H2O leads to the high possibility of life on the Martian surface as well as greatly determines the landscape of ancient Mars.

The objective involving subjecting bacterial colonies to Martian specific stressors was replaced by determining subsurface geological features of the PLD. This is because the bacterial experiment could be conducted on Earth in controlled environments for much cheaper. The subsurface geological features pertained much more specifically to the PLD and would aid our understanding of the PLD greatly as opposed to harboring bacterial colonies on the Martian poles.

The initial objective regarding radiation was altered to also support our understanding of the H2O within the PLD. Rather than determining the insulation capability of the layers, the DAN will provide an understanding of the initial radiation bombardment. This initial reading will support the reading of the DAN in determining the presence of H2O.

Detailed Experimental Plan:

1. The Pancam will provide operators on earth with the capability to navigate COSMOS to a desired spot within the designated site.

2. Once parked and stationary, COSMOS will activate RIMFAX to read the geological features under the PLD. This will provide background as to how the terrain under the deposits has affected the physical formations of the deposits.
3. The rover will activate the RAD. The RAD will determine the current radiation that is being received by the sun on the surface of the PLD at the rover's current position. This will provide an expectation of how the velocity of displaced neutrons will be affected as it is higher radiation that increases the speed.
4. DAN will then be activated which will read the velocities of these displaced neutrons due to radiation. The velocities will be affected by the level of radiation and the presence of hydrogen atoms within the PLD that are located primarily in H2O molecules. Since the radiation level will be accounted for by the RAD, any variance in expected velocities will be accounted for by the presence or absence of water molecules.
5. If the DAN system fails, the ChemCam will provide redundancy. The ChemCam will vaporize spots on the surface of the PLD and use a spectrometer to determine the molecules that compose that portion of the PLD surface.
6. The data collected will be stored in the SSD and transmitted to earth via high-gain antenna.

Science Payload and Deliverables:
DAN (Dynamic Albedo of Neutrons) measures the velocity of neutrons displaced by the radiation of the sun. The velocity of neutrons are affected by the presence of hydrogen atoms within water molecules. Therefore, a greater concentration of H2O ice leads to a slower velocity of neutrons which will be detected by the DAN. The instrument will be oriented perpendicular, and facing towards, the surface of the PLD being studied. The RAD (radiation assessment detector will be oriented upward towards the direction of the sun. This will allow for the initial reading of radiation that provides the baseline for the expected range of velocities of the neutrons for DAN. Radar Imager for Mars' Subsurface Experiment (RIMFAX) provides redundancy for the functions of DAN and RAD.
Detects composition of frozen water in subsurface locations at deeper than 10 m.

Location for landing:
See Figure 3.3 with coordinates. Green corresponds with the existence of H2O; the image has been darkened to make visible the swath of H2O layers in the image stamp.

3.2.5. Testing and Calibration Measurements

To calibrate the instrument for the expected landing site on Mars, we plan to simulate the site's conditions and test the instrument accordingly. This will involve a pre-launch calibration to ensure that the instrument is functioning correctly before it reaches Mars. After landing, we will also perform a post-landing calibration to make any necessary adjustments to the instrument based on its performance during the journey to Mars. It's worth noting that these tasks won't be a walk in the park, as they involve dealing with substantial amounts of ice and enduring extreme temperatures. Nevertheless, since our equipment will be heated, we're confident that we can handle the task with relative ease. Below are important resources regarding the calibration procedure of our instruments.

Instrument	RIMFAX (Radar Imager for Mars' Subsurface Experiment)	DAN (Dynamic Albedo of Neutrons)	PanCam x2	ChemCam	RAD
Means of Calibration	Use calibration cable and follow the steps in the RIMFAX manual (Reference [20])	Follow the steps on the DAN calibration report (Reference [21])	Follow the steps for the PanCam laid out by NASA in reference [22]	Follow the steps for the PanCam laid out by NASA in reference [23]	Follow the steps for the PanCam laid out by NASA reference [24]

Table 3.7: Science instrumentation calibration plans.

3.2.6. Precision and Accuracy of Instrumentation

Instrument	RIMFAX (Radar Imager for Mars' Subsurface Experiment)	DAN (Dynamic Albedo of Neutrons)	PanCam x2	ChemCam	RAD
Accuracy	**Vertical resolution :** 7 -15 cm (Calibration dependent). **Horizontal resolution:** 30 to 60 cm. **Data Frequency:** Collects data every 0.1 meters, can penetrate the surface up to 10m depending on the composition of the surface.	**~2 Minute measurements:** ±1% (of mass). **~30 Minute measurements:** ±0.1-0.3% (of mass)	**Image Resolution & Size:** 1024 x 1024 pixels, i.e. ~1 millimeter per pixel at a distance of 3 meters from the rover. **Focal Length:** 39 millimeters, with optimal focus from 5 feet (1.5 meters) to infinity. **Focal Ratio & Field of View:** f/20, yielding an IFOV of 0.27 mrad per pixel and a FOV of 16.8 degrees x 16.8 degrees. **Stereo Separation:** ~11.8 inches (30 centimeters) between the two cameras.	**Major Elements:** ±5%. **Minor Elements:** ±10-15%.	**Time Resolution:** 1 hr [1min]. **Max Count:** 5000 Events/sec
Relevant Resources	[13]	[5] [10]	[9]	[8]	[12]

Table 3.8: Science instrumentation expected precision and accuracy with relevant sources.

3.2.7. *Expected Data & Analysis*

Instrument	Data Example	Possible Data Differences	Analyzed Data & Conclusions	Additional Information
RIMFAX (Radar Imager for Mars' SubsurFAce eXperiment)	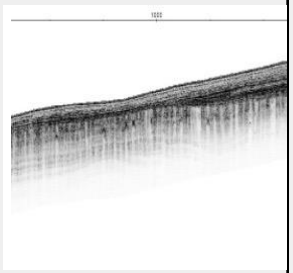	Data obtained will be different data shown below. Rover will land in a different location.	Analyze data to determine the geology of the surface of mars. Looking at the analyzed data will pick spots that indicate the presence of ice deposits.	Additional information captured can help predict past Martian climate and environment. How Mars lost its atmosphere and when.
DAN (Dynamic Albedo of Neutrons)	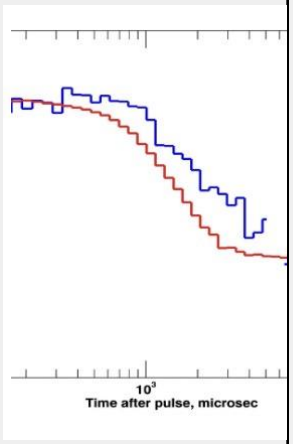	Obtained data will conclude in differences in data. Data collected was material near the Gale Crater. The composition of materials will be different near the polar ice caps.	Data will determine information about the water content in the material being analyzed. (Dynamic Albedo) Measuring the velocity of neutrons that are impacted by layers of hydrogen-bearing material. Determining how much H20 is chemically bonded in with the soil or rocks.	Additional Information can lead to the tracking of neutron radiation background (which is harmful to humans) for further Mars exploration.

RAD (Radiation Assessment Detector)	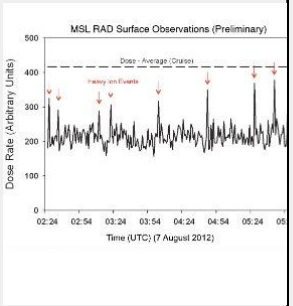	Data will either be the same or different since radiation can fluctuate depending on the location and angle of the sky according to the position.	Elaborating the amount of galactic cosmic rays and solar particles that pass through the Martian atmosphere. Collected data will calculate the approximate radiation exposure a human will be exposed to on the surface.	Additional data will help determine how radiation has impacted Mars. Identify the chemical isotopic composition of rocks and the changes to the atmosphere.
Pancam (Panoramic Camera)		Data will differentiate depending on the location.	Analyze the Martian surface with various wavelengths. The data that will be obtained will determine the rover's orientation and location. To see atmospheric conditions and obtain images of Mars landforms.	Additional data will allow the understanding of Mars' polar ice caps and its terrain. It will also allow the mapping of the surrounding area with the images obtained.
ChemCam (Chemistry and Camera tool)	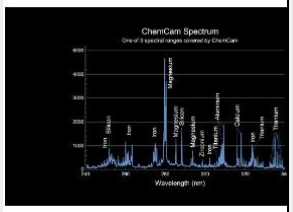	Data will be different since the rocks were analyzed near the Gale Crater. The composition will be different compared to other locations.	By analyzing the elemental composition of the vaporized material captured through the instrument's spectrographs. This will conclude and indicate the chemical analysis of the soil/rock. To pinpoint locations with rocks with ice or materials with water molecules in their crystal structures.	Additional data can help find areas that are highly concentrated in water molecules for possible mars exploration and water extraction.

Table 3.9: Expected data from science instrumentation.

4. *Mission Risk Management*

4.1. Safety and Hazard Overview

Risks are an important factor in this design process. Understanding the potential issues and risks associated with the mission concept must be acknowledged before moving forward. By doing thorough research and formulating the Risk Analysis, Failure Mode and Effect Analysis, and Personal Hazards and Mitigations sections, the team can recognize potential risks and formulate appropriate solutions to mitigate each risk. As such, the team will be able to keep on par with the mission objective and be prepared for any scenario that may harm the mission. These risks could range from power issues to budget cuts, but acknowledging each potential risk is critical as anything could happen during the mission and the team must be prepared for it.

4.1.1. Risk Analysis

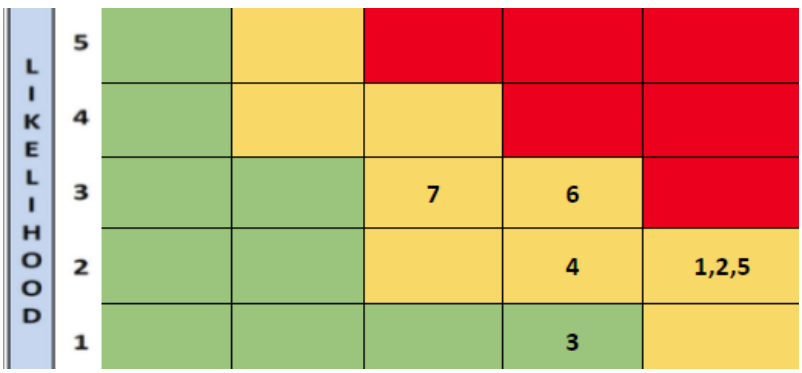

Figure 4.1: Risk diagram for COSMOS.

ID	Summary	L	C	Trend	Approach	Risk Statement	Status
1	Mechanical	2	5	↓	M	Wheels break off	Active
2	Power	2	5	→	A	Dust accumulates on the solar panels	Active
3	Thermal	1	4	→	A	Thermal control fails and system fails to stay within operation-safe temperatures.	Active
4	Communication	2	4	↓	M	Antenna is destroyed by debris	Active
5	Payload	2	5	→	A	Instrumentation yields skewed data	Active
6	Budget	3	5	→	W	Project exceeds $275M cost cap	Active
7	Schedule	3	4	→	W	Unexpected delays in manufacuring complex components	Active

Table 4.1: Risk analysis table.

4.1.2. Failure Mode and Effect Analysis (FMEA)

Function	Failure Mode	Effects	Sev	Cause	Occ	Prevention	Det	RPN	Actions
Suspension System	Wheels break off	The rover is not able to smoothly trek across the terrain	70	Rough Terrain	70	Ensure materials of wheels can withstand bumps and rocks	1	4900	The rover will need to have a new wheel design
	Suspension breaks	The rover can no longer travel	80	Rough Terrain	20	Ensure materials of suspension can withstand bumps and rocks	1	1600	The rover will need to have a new suspension design
	Proper steering of the rover malfunctions	The rover will be unable to move in the suggested direction	50	Faulty wiring and communication malfunctions	10	Ensure wiring and communication signals are not interfered with	20	10000	Wiring will need to be reconstructed
Solar Panels	Damaged by dust and debris	Solar panels may be unable to function entirely	50	Wind storms and rocks	90	Ensure solar panels can prevent dust from collecting on top	10	45000	New solar panel design will need to be manufactured
	Unable to collect enough sunlight	The rover will have to run on less power causing other systems to fail	40	Indirect sunlight and normal wear and tear of panels	30	Ensure rover is in the presence of sunlight for a majority of the time	30	36000	Location of rover will need to be changed
	Failure to connect to power system	Unable to transfer solar energy to the power system	95	Faulty wiring and sensor malfunction	40	Ensure sensors and wired are protected from environmental damage and properly assembled	5	19000	Wiring and sensors will need to be reconstructed
Heating System	Heaters fail to detect low temperatures	Thermal system will not know when to heat rover	90	Faulty sensors	10	Ensure sensors fully function prior to assembling on the rover	60	54000	Sensors will need to be replaced
	Heaters fail to increase the internal heat of the rover	Devices will not be heated	95	Lack of power to provide heat and faulty wiring	10	Ensure power system and wires fully function prior to implementing on the rover	50	47500	Wiring will need to be reconstructed

Table 4.2: Failure Mode and Effect Analysis

4.1.3. Personnel Hazards and Mitigations

Sam Courtney
Lead Systems Engineer/ Safety Officer
Mississippi State University in Starkville, Mississippi
Sam is an Aerospace Engineering major with minors in Electrical Engineering and Mathematics. His responsibilities include identifying and assessing potential hazards as well as developing safety procedures for the mission.

Figure 4.2: Project Safety Officer autobiography.

Hazard	Explanation	Mitigation
Electrical	The use of high voltage electrical equipment and wiring can result in electrical shocks and burns.	Workers should be trained in safe electrical work practices and use personal protective equipment (PPE) such as insulated gloves and shoes. Regular inspection and maintenance of electrical equipment can also help prevent electrical hazards.
Chemical	The use of various chemicals, including solvents, adhesives, and coatings, can pose a risk of exposure to toxic substances, fire, and explosion.	Workers should be provided with appropriate PPE such as gloves, goggles, and respirators. Proper ventilation and storage of chemicals can also reduce the risk of exposure.
Ergonomic	Repetitive motions, awkward postures, and lifting heavy objects can lead to musculoskeletal disorders and injuries.	Ergonomic workstations, tools, and lifting aids can help reduce the risk of musculoskeletal disorders and injuries.
Noise	Noise from equipment and machinery used in satellite manufacturing can cause hearing damage.	Employers should provide workers with hearing protection such as earplugs or earmuffs and reduce noise levels by using sound-absorbing materials or enclosing noisy equipment.

Thermal	Workers may be exposed to extreme temperatures during certain phases of manufacturing, which can lead to burns, heat exhaustion, or heat stroke.	Employers should provide workers with appropriate PPE such as insulated clothing, gloves, and hats. Regular breaks in a cool environment can also help reduce the risk of heat exhaustion or heat stroke.
Mechanical	Moving machinery, sharp tools, and heavy objects can pose a risk of injury.	Employers should implement machine guarding, lockout/tagout procedures, and provide workers with appropriate PPE such as safety glasses and steel-toed shoes.

Table 4.3: Personnel Hazards and Mitigations table.

5. *Activity Plan*

5.1. Schedule

ID#	TASK	ASSIGNED TO	START	END	DAYS	MARGIN
1	**Concept and Technology Development**		1/1/23	3/3/23	62	17
1.1	Establish system baseline	Science	1/1/23	2/19/23	50	
1.2	Instrument selection and V&v Plan	Science	1/1/23	2/19/23	50	
1.3	Science Traceability and Payload Objectives	Science	1/1/23	2/19/23	50	
1.4	System Requirements and Risks Review	Science, Engineering	2/20/23	3/30/23	39	
1.5	System and Subsystem Overview	Science, Engineering	2/20/23	3/30/23	39	
1.6	SRR and MDR	Science	2/20/23	4/15/23	55	
1.7	Schedule Margin		4/14/23	4/30	17	
1.8	◆ Milestone		4/30/23	4/30/23	1	
2	**Preliminary Design and Technology Completion**		5/1/23	9/15/23	138	15
2.1	Technology Development	Engineering/Science	5/1/23	6/30/23	61	
2.2	Engineering prototyping	Engineering	5/1/23	6/30/23	61	
2.3	Heritage system assessment	Engineering	5/1/23	6/30/23	61	
2.4	Risk mitigation	Engineering	7/1/23	8/30/23	61	
2.5	Manufacturing and assembly plan	Engineering	7/1/23	8/30/23	61	
2.6	PDR	Engineering/Science	3/1/23	4/30/23	61	
2.5	Schedule Margin		9/1/23	9/15/23	15	
2.6	◆ Milestone		9/15/23	9/15/23	1	

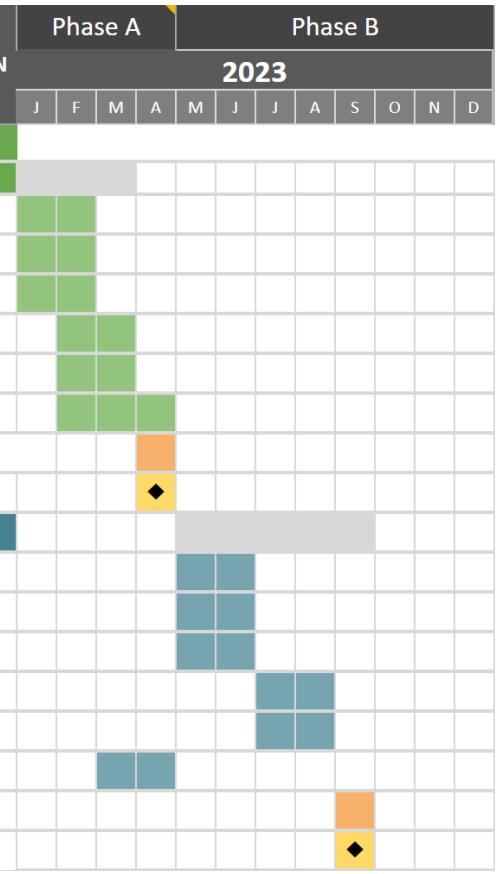

Figure 5.1: COSMOS Phases A and B schedule.

ID#	TASK	ASSIGNED TO	START	END	DAYS	MARGIN
3	**Final Design and Fabrication**		8/30/23	5/30/26	1005	30
3.1	Final system design	Engineering/Science	8/30/23	5/30/24	275	
3.2	Finalize manufacturing and assembly plan	Admin/Engineering	8/30/23	5/30/24	275	
3.3	Hardware Fabrication	Technicians	6/1/24	6/1/25	366	
3.4	System testing and analysis	Engineering/Science	6/1/25	12/31/25	214	
3.5	Update risks	Engineering/Science	1/1/26	2/20/26	51	
3.6	CDR , TRR and SIR	Engineering/Science	6/1/25	4/30/26	334	
3.7	Schedule Margin		5/1/26	5/30/26	30	
3.8	◆ Milestone		5/30/26	5/30/26	1	

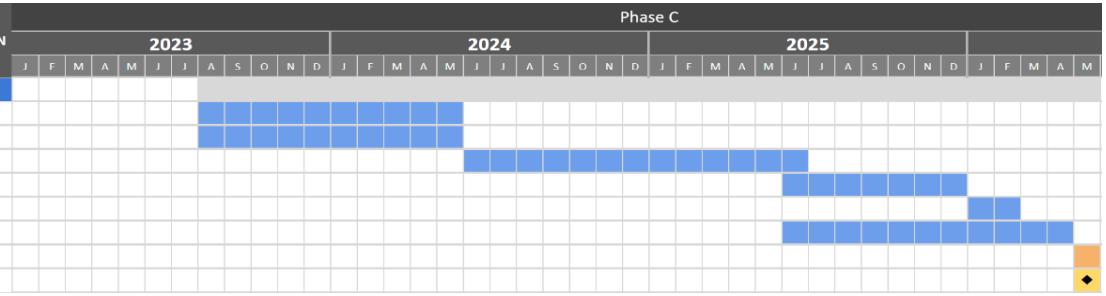

Figure 5.2: COSMOS Phase C schedule.

ID#	TASK	ASSIGNED TO	START	END	DAYS	MARGIN
4	**System Assembly and Checkout**		6/1/26	1/31/28	610	62
4.1	System Integration	Engineering	6/1/26	7/1/26	31	
4.2	Assembly	Technicians	7/1/26	7/1/27	366	
4.3	Assemblies verification and validation	Engineering/Science	7/1/27	9/1/27	63	
4.4	Final system testing	Engineering	8/1/27	12/1/27	123	
4.5	SIR and ORR	All	10/1/27	12/1/27	62	
4.5	Schedule Margin		12/1/27	1/31/28	62	
4.6	◆ Milestone		1/31/28	1/31/28	1	

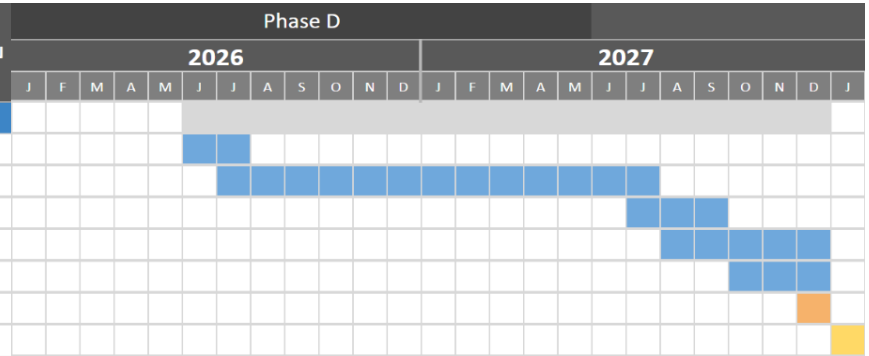

Figure 5.3: COSMOS Phase D schedule.

ID#	TASK	ASSIGNED TO	START	END	DAYS	MARGIN
5	**Operations and Sustainment**		2/1/28	6/30/28	151	64
5.1	Launch	All	2/1/28	5/1/28	91	
5.2	Vehicle Performance Assessment	Engineering	5/1/28	5/31/28	31	
5.3	Surface Operations and Data Collection	Science/Engineering	6/1/28	6/14/28	14	
5.4	PLAR, CERR	All	5/1/28	6/30/28	61	
5.6	◆ Milestone		6/30/28	6/30/28	1	

Figure 5.4: COSMOS Phase E schedule.

The COSMOS schedule for Phases A and B reflects the parts of the mission where the initial concepts and technology ideas are developed. For Phase A this includes coming up with a credible system structure, requirements and constraints, instrument selection, a Verification and Validation plan, and a system and subsystem overview, which is distributed in a timeline of 4 months between January and April 2023. Moving on to Phase B, which is the Preliminary Design and Technology Completion, revolves around finishing the technology development, engineering prototyping, heritage system assessment, risk mitigation, and finalizing the PDR document. Once this is done, there can be a manufacturing and assembly plan made to move on to the final design and fabrication part. The initial PDR document is expected to be done by April 2023, with the final manufacturing plans following up to August 2023.

The Phase C schedule, which is the final design and fabrication part of the mission, consists of completing the detailed design of the system by taking into account the requirements defined in phases A and B. During the time frame between August 2023 to May 2026, the Critical Design Review is done along with the final manufacturing and assembly plan. This leads to the actual hardware fabrication, the system testing analysis, and a final update to the risks.

The Phase D schedule includes the system assembly and check out. From June 2026 to January 2028 the system will be assembled, integrated, and it will go through the process of verification and validation. This will lead to completing the Mission Readiness Review, updating the operational procedures such as the operator’s and maintenance manuals, and confirming the system is ready for flight.

Finally, Phase E begins right after the scheduled launch date of May 2028. Once the launch vehicle has taken off with the rover, there will be a vehicle performance assessment, the science instruments will be commissioned and activated, leading to the surface operations and data collection. During this time there will be sustaining support during the 2 month mission on the surface of mars, leading to the planned decommissioning of the system.

5.2. Budget

NASA L'SPACE Mission Concept Academy Budget - *COSMOS*							
Year	Yr 1 Total	Yr 2 Total	Yr 3 Total	Yr 4 Total	Yr 5 Total	Yr 6 Total	Cumulative Total
PERSONNEL							
Science Personnel	$ 480,000.00	$ 480,000.00	$ 480,000.00	$ 240,000.00	$ 240,000.00	$ 240,000.00	$ -
Engineering Personnel	$ 240,000.00	$ 240,000.00	$ 480,000.00	$ 480,000.00	$ 480,000.00	$ 480,000.00	$ -
Technicians	$ 180,000.00	$ 180,000.00	$ 360,000.00	$ 360,000.00	$ 360,000.00	$ 360,000.00	$ -
Administration Personnel	$ 180,000.00	$ 180,000.00	$ 180,000.00	$ 180,000.00	$ 180,000.00	$ 180,000.00	$ -
Project Management	$ 240,000.00	$ 240,000.00	$ 240,000.00	$ 240,000.00	$ 240,000.00	$ 240,000.00	$ -
Total Salaries	$ 1,320,000.00	$ 1,320,000.00	$ 1,740,000.00	$ 1,500,000.00	$ 1,500,000.00	$ 1,500,000.00	**$ 8,880,000.00**
Total ERE	$ 368,412.00	$ 368,412.00	$ 485,634.00	$ 418,650.00	$ 418,650.00	$ 418,650.00	**$ 2,478,408.00**
TOTAL PERSONNEL	$ 1,688,412.00	$ 1,688,412.00	$ 2,225,634.00	$ 1,918,650.00	$ 1,918,650.00	$ 1,918,650.00	**$ 11,358,408.00**
TRAVEL							
Total Flights Cost	$ 18,650.00	$ 10,500.00	$ 6,800.00	$ 10,500.00	$ 21,950.00	$ 25,231.00	**$ 93,631.00**
Total Hotel Cost	$ -	$ 7,000.00	$ 6,800.00	$ 5,600.00	$ -	$ 12,834.00	**$ 32,234.00**
Total Transportation Cost	$ 5,100.00	$ 4,200.00	$ 5,100.00	$ 4,200.00	$ 5,550.00	$ 12,972.00	**$ 37,122.00**
Total Per Diem Cost	$ 5,400.00	$ 4,200.00	$ 5,100.00	$ 4,200.00	$ 6,000.00	$ 6,900.00	**$ 31,800.00**
Total Travel Costs	$ 29,150.00	$ 25,900.00	$ 23,800.00	$ 24,500.00	$ 33,500.00	$ 57,937.00	**$ 194,787.00**
OUTREACH							
Total Outreach Materials	$ 250,000.00	$ 75,000.00	$ 75,000.00	$ 75,000.00	$ 75,000.00	$ 250,000.00	**$ 800,000.00**
Total Outreach Venue Costs	$ 250,000.00	$ 25,000.00	$ 25,000.00	$ 25,000.00	$ 25,000.00	$ 250,000.00	**$ 600,000.00**
Total Outreach Costs	$ 500,000.00	$ 100,000.00	$ 100,000.00	$ 100,000.00	$ 100,000.00	$ 500,000.00	**$ 1,400,000.00**
DIRECT COSTS							
|> Science Instrumentation	$ 22,000,000.00	$ -	$ -	$ -	$ -	$ -	**$ 22,000,000.00**
|> Other Payload Costs	$ 5,000,000.00	$ -	$ -	$ -	$ -	$ -	**$ 5,000,000.00**
Total Payload Costs	$ 27,000,000.00	$ -	$ -	$ -	$ -	$ -	**$ 27,000,000.00**
|> Mechanical Subsystem	$ 213,030.00		$ -	$ -	$ -	$ -	**$ 213,030.00**
|> Power Subsystem	$ 35,000,000.00	$ -	$ -	$ -	$ -	$ -	**$ 35,000,000.00**
|> Thermal Control Subsystem	$ 2,000,000.00	$ -	$ -	$ -	$ -	$ -	**$ 2,000,000.00**
|> Comms/Data Handling Subsystem	$ 2,500,000.00	$ -	$ -	$ -	$ -	$ -	**$ 2,500,000.00**
Total Vehicle Costs	$ 39,713,030.00	$ -	$ -	$ -	$ -	$ -	**$ 39,713,030.00**
|> Manufacturing Facility Cost	$ 30,000,000.00	$ -		$ -	$ -		**$ 30,000,000.00**
|> Test Facility Cost	$ -	$ -	$ 9,000,000.00	$ -	$ 18,000,000.00		**$ 27,000,000.00**
Total Facilities Costs	$ 30,000,000.00	$ -	$ 9,000,000.00	$ -	$ 18,000,000.00	$ -	**$ 57,000,000.00**
Manufacturing Margin	$ 48,356,515.00	$ -	$ 4,500,000.00	$ -	$ 9,000,000.00	$ -	**$ 61,856,515.00**
Total Direct Costs	$145,069,545.00	$ -	$ 13,500,000.00	$ -	$ 27,000,000.00	$ -	**$185,569,545.00**
Total MTDC	$ 33,356,515.00	$ -	$ -	$ -	$ -	$ -	**$ 33,356,515.00**
FINAL COST CALCULATIONS							
Total F&A	$ 3,335,651.50	$ -	$ -	$ -	$ -	$ -	**$ 3,335,651.50**
Total Projected Cost	$150,622,758.50	$ 1,814,312.00	$ 15,849,434.00	$ 2,043,150.00	$ 29,052,150.00	$ 2,476,587.00	**$201,858,391.50**
Total Cost Margin	$ 45,186,827.55	$ 544,293.60	$ 4,754,830.20	$ 612,945.00	$ 8,715,645.00	$ 742,976.10	**$ 60,557,517.45**
Total Project Cost	$195,809,586.05	$ 2,358,605.60	$ 20,604,264.20	$ 2,656,095.00	$ 37,767,795.00	$ 3,219,563.10	**$262,415,908.95**

Table 5.1: Comprehensive budget for all costs associated with COSMOS mission.

Team 17 will be composed of the following personnel over the course of the COSMOS mission: six scientists, six engineers, six technicians, three administrators, and two project managers. The administrators and project managers will stay consistent throughout the mission to ensure the mission timeline is met and information is conveyed to personnel consistently. The mission will begin with six scientists to assist in development of the mission and instrumentation requirements. After completion of

the science instrumentation, this number will drop to three knowledgeable science personnel to assist in the completion of the COSMOS mission. Conversely, the mission will begin with three engineers while payload components are manufactured in separate facilities, and after the third fiscal year the mission will add three additional engineering personnel to assist in the testing and any troubleshooting of the subsystem components. The number of technicians on the team will increase from three to six in the third fiscal year for this same reason. Team 17's personnel will total 23 members over the six fiscal years of the mission.

Throughout the six years of the COSMOS mission prior to launch, Team 17 will travel once per fiscal year. In the first and fifth year, the team will travel to NASA's Astronaut Beach House in Cape Canaveral for team bonding and morale boosts. In year one, this will serve as a means to connect with other team members, and in year five it will serve as a reward for the hard work and dedication that the personnel put into COSMOS. The costs were calculated using the most expensive flights from the team base in Washington DC to Cape Canaveral. Stipends of $300 for transportation and $300 for any per diem expenses were included for each traveling team member. In the second year of the COSMOS mission, fourteen members of the team will travel to Los Alamos National Laboratory in Santa Fe, NM upon completion of the ChemCam instrument at the facility. Traveling team members will include six science personnel, three technicians, and the administrative and management staff. Flight costs were calculated based on the most expensive option from Washington DC to Santa Fe, and hotel costs average $250 per night in the area. Again, stipends of $300 for transportation and $300 for any per diem expenses were included for each traveling team member. In the third year, seventeen team members will travel to the Jet Propulsion Laboratory (JPL) in Pasadena, CA. During this trip, the team will view and learn about the completed parts for COSMOS built in the JPL facility. These parts include all science instrumentation except the ChemCam and RAD, the Solid State Drives (SSD's), and the X-band High Gain Antenna. Flights were estimated using the most expensive option from Washington DC to Pasadena, and hotel costs average $200 per night near JPL. Again, stipends of $300 for transportation and $300 for any per diem expenses were included for each traveling team member. In the fourth year, fourteen team members will travel to the Southwest Research Institute in Boulder, CO, to oversee completion of the final instrument, the Radiation Assessment Detector (RAD). Flight costs were calculated using the most expensive option from Washington DC to Boulder, and hotels near Southwest Research Institute averaged $200 per night. Once again, stipends of $300 for transportation and $300 for any per diem expenses were included for each traveling team member. Finally, in the final year, all twenty-three members of Team 17 will travel to Cape Canaveral for the launch of COSMOS. Maximum flight costs were utilized and the average hotel cost is about $200. All team members will stay for three nights. The per diem costs and transportation costs were estimated using the per diem tool from the US General Services association.

Team 17 will be funding outreach efforts throughout all six years leading up to the launch of COSMOS. In the first year, Team 17 will primarily focus on elementary, middle, and high school outreach with an emphasis on Mars Day. The school outreach

materials will total $150,000 in the first year. For the elementary school component, representatives of the mission will speak at science fairs and demonstrate a “traveling to Mars” activity. For the middle school component, representatives will speak about rovers and how they work while engaging students in a small-scale “building a rover” activity. For the high school component, Team 17 will bring in NASA guest speakers and offer scholarships to students interested in NASA missions and STEM fields. A workshop will also be held for high school students in Washington DC that engages students in rover-based activities while teaching about the significance of the COSMOS mission. Most of the first-year funding will go towards a Mars Day initiative that invites all members of the public to participate in a workshop about the COSMOS mission. The workshop will address how the cosmos came to be, offer information about the specifics of the mission, and provide scholarship, mentorship, and internship opportunities for interested members of the public. These opportunities will be especially geared towards underrepresented communities. This Mars Day initiative will receive funding of about $100,000, and will be held in the Walter Washington Convention Center in Washington DC. To further public engagement with the mission, workshops will be held in various public locations throughout the country allowing the public to learn more about past NASA missions and how COSMOS builds upon them. This initiative will be funded with $250,000. In years two through five, Team 17 will focus on high school and college student opportunities, providing scholarships and workshops on how they can get involved with the mission and NASA as a whole. Funding for these activities will total $100,000 per year. Finally, in the year of the launch, outreach funding will be increased to $500,000 and the outreach initiatives will expand to include more public appearances, a chance to view the completed rover, and workshop experiences that will include a Q&A with all team members who worked on the COSMOS mission.

For Team 17’s COSMOS mission instrumentation and payload costs, the team utilized the NASA Instrument Cost Model (NICM) Version 9c.

The cost breakdown of the individual science instruments procured for the COSMOS mission can be found in Table 3.2 of Section 3.1.4. All instruments except the PanCam and ChemCam were calculated using the Body In-Situ Instrument equation. For the PanCam and ChemCam instruments, the Arm/Mast Mounted In-Situ Instrument equation was used. The power and mass costs that were inserted for each instrument can be found in the science instrumentation section of this document. The total price of $21,066,898 for the instrumentation was rounded up to the nearest million to account for additional instrumentation costs/modifications that may accumulate throughout the mission. The estimated manufacturing and testing costs of the instruments were found by inserting the total instrument cost from the NICM into the Mission Concept Cost Estimate Tool (MCCET). The manufacturing cost of all instruments amounted to $30,000,000 by combining the MCCET manufacturing estimations for each instrument. By combining the MCCET testing estimations for each instrument, the total testing cost was estimated to be $9,000,000 for the first test, which will be conducted in the third fiscal year, and $18,000,000 for the final test conducted in the fifth fiscal year.

For the costs of the various subsystems, the totals were found by adding up the individual components chosen for each subsystem. The mechanical subsystem has the lowest cost with just $213,030 for the suspension and wheels of the rover. The most expensive subsystem on the rover is the power subsystem, totaling $35,000,000. The components of this subsystem include the solar panels, power system, and power storage. Overall, the total base price of all payload components excluding the science instrumentation cost came to $44,713,030.

The overall cost of the COSMOS mission came to about $263,000,000. The allowed budget was $275,000,000, so Team 17 had a surplus of about $12,000,000. This allows for some wiggle room in the budget should any issues arise.

5.3. Outreach Summary

STEM fields are essential for advancing human knowledge and solving some of the world's most pressing problems. However, there is still a significant underrepresentation of diverse individuals in these fields, which can lead to limited perspectives and solutions. Therefore, it is vital to increase public awareness and appreciation for STEM and encourage participation from underrepresented communities. As a team dedicated to this mission, we have devised several steps to achieve these goals.

The first step we will take is to reach out to K-12 schools. The earlier children are exposed to STEM concepts, the better they will be able to develop an interest in these fields. Therefore, we will provide hands-on learning experiences, such as workshops and demonstrations, to spark their interest in STEM subjects. We will also collaborate with teachers to create innovative lesson plans that incorporate STEM concepts into different subjects. In addition, we will encourage K-12 schools to participate in STEM-related rover-building competitions such as promoting interest in the field.

The next step we will take is to develop different activities for different levels of education. For elementary school students, we will provide fun and interactive activities such as science fairs and activities involving traveling to mars. For middle school students, we will focus on more in-depth topics such as scientific research about CubeSat missions and their engineering design. For high school students, we will provide more comprehensive workshops about the rover design process and have a guest speaker talk to them about our mission and our team’s experience. Those who are interested in the field are encouraged to apply for a $1,000 dollar scholarship to help with school related expenses.

Another critical step we will take is to provide outreach to underrepresented communities. We understand that there is a significant gap in STEM representation among minorities, women, and people with disabilities. Therefore, we will work closely with community leaders to organize events and programs that promote STEM education among these groups. We will also collaborate with local universities and organizations to offer scholarships, internships, and mentorship programs to students from

underrepresented communities. Create a “Mars Rover Day” to communicate these needs for those who are greatly underrepresented. Those who are interested in the filed are also encourage to apply for a $1000 dollar scholarship

Finally, we will involve the community in the work and research required for our mission. We will organize events and projects that allow the public to learn about our research and participate in activities related to it. For example, we will invite the community to participate in citizen science projects. We will also organize science cafés and other forums where experts can discuss their work with the public and answer questions.

Increasing public awareness and appreciation for STEM is crucial for advancing human knowledge and solving the world's problems. As a team dedicated to this mission, we will take several steps to achieve our goals, including reaching out to K-12 schools, developing different activities for different levels of education, providing outreach to underrepresented communities, and involving the community in our work and research. We believe that by working together, we can promote a more diverse and inclusive STEM community and help create a brighter future for all.

5.4. Program Management Approach

The team was organized based on the engineering subteam and the science subteam, and the Project Manager and Deputy Project Manager assisted both subsystems as needed. Every week there were at least two meetings that focused on each subsection, and the person leading the meeting varied between the Project Manager, the Chief Scientist and the Lead Systems Engineer. Both individual work and teamwork were needed; essentially the meetings were used to come up with decisions as a group, discuss upcoming sections, evaluate and review current information, and delegate tasks to each member of the team. Outside of the meetings, each member was expected to work on their assigned tasks, do research on their corresponding sections, and if necessary collaborate with others to get specific parts done.

In terms of working together, it was mostly a seamless progress. There were occasions that some team members were not able to be present for specific time periods, but it was known that if this was the case they should reach out to the Project Manager or Deputy Project Manager so they could coordinate accordingly. Communication was highly encouraged from the beginning, therefore when everyone began sharing their schedules and availability, it became a smoother process.

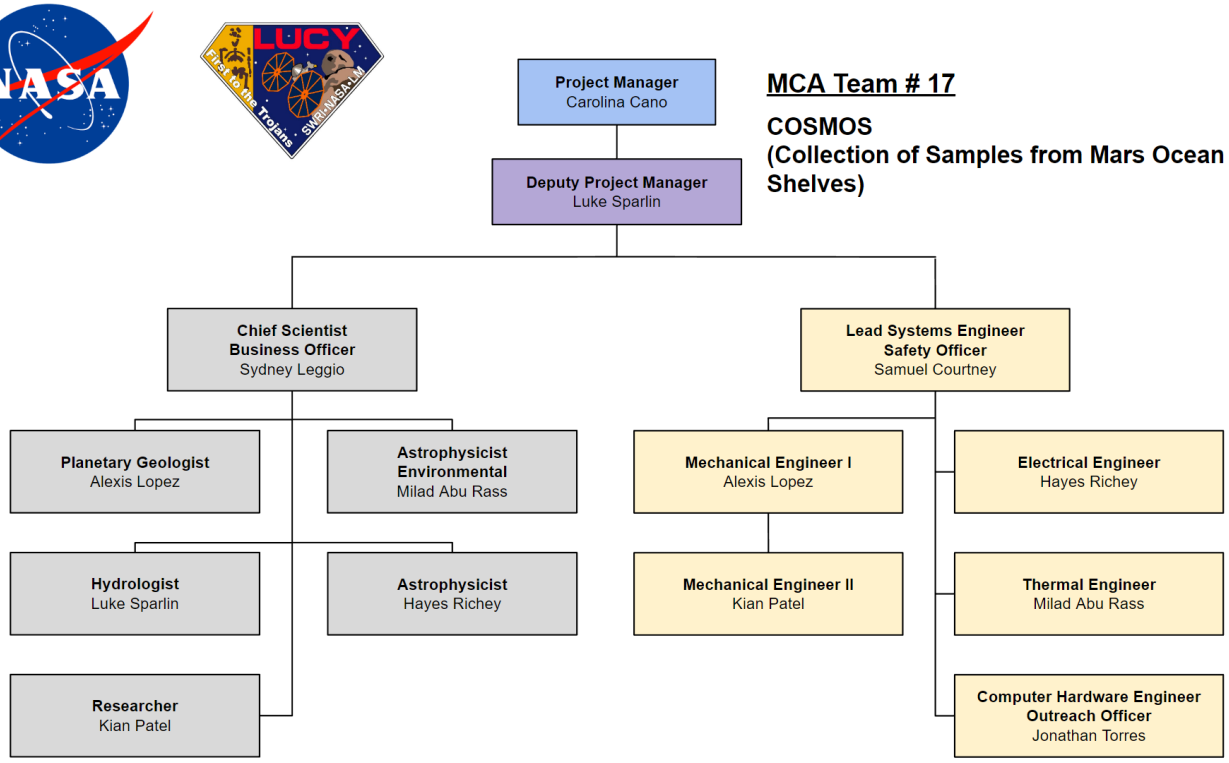

Figure 5.5: Team 17 Organization Chart.

6. *Conclusion*

The mission aims to evaluate Mars' climate and explore the possibility of life by studying the physical and chemical composition of the northern polar ice deposits. This will be accomplished through observing the subsurface terrain with RIMFAX and the chemical composition of the topmost layers with ChemCam; however, the bulk of the science will be collected as the RAD reads the baseline level of radiation for the DAN to then measure the velocity of displaced neutrons, and therefore, presence of H2O. This insight will allow the evaluation of Mars' atmospheric history and the possibility of life which will further expand on current data, especially data collected from the most recent Perseverance and Ingenuity rovers. Four wheels with proper suspension and chassis allow for protection and transport of the rover. The power is harvested through 2 panels with 220 cells each which is managed by the Ibeos Modular Power system. Data is processed by the NASA Rover Computing Element and is communicated via the transponder in tangent with the high gain antenna; redundancy is provided through the low-gain antenna. The thermal management is accomplished through a lightweight radioisotope heater unit within the rover.

Given more time and resources, a second probe to the southern Martian pole would be the next step in the mission. At the southern pole, the same suite of instrumentation would be utilized to measure the deposition of the ice deposits on the opposite side of Mars. The purpose of this would be to determine how the climate of the two hemispheres have differed over the life of the planet. This would also provide information regarding the opposite seasons of Mars simultaneously, ancient massive weather patterns, and a bolstering of the original findings of the primary mission.

7. References

[1] “Radioisotope Heater Units (RHUs).” *NASA Jet Propulsion Laboratory,* https://web.archive.org/web/20160810043227/https://saturn.jpl.nasa.gov/system/downloadable_items/291_rhu.pdf

[2] “32% Quadruple Junction GaAs Solar Cell.” *AZUR SPACE Solar Power Cells*, https://www.azurspace.com/images/0005979-01-01_DB_4G32C_Advanced.pdf.

[3] “Modular 28V Battery / Datasheet.” *Ibeos*, https://www.ibeos.com/modular-battery-datasheet.

[4] “Standard Products.” *Ibeos*, https://www.ibeos.com/standard-products.

[5] Mitrofanov, Dr. Igor. “www.iki.rssi.ru.” *Department of Nuclear Planetology - DAN*, https://np.cosmos.ru/en-us/instruments/dan.

[6] PDS Geosciences Node, Washington University in St. Louis. “Analyst's Notebook Help.” *Analyst's Notebook*, https://an.rsl.wustl.edu/help/Content/About%20the%20mission/MSL/Instruments/RAD.htm

[7] “ChemCam for Scientists.” *NASA*, NASA, 15 Apr. 2021, https://mars.nasa.gov/msl/spacecraft/instruments/chemcam/for-scientists/

[8] “ChemCam.” *NASA*, NASA, 3 May 2022, https://mars.nasa.gov/msl/spacecraft/instruments/chemcam/

[9] “The Panoramic Camera (Pancam).” *NASA*, NASA, https://mars.nasa.gov/mer/mission/instruments/pancam/.

[10] “Dan.” *NASA*, NASA, 22 Apr. 2020, https://mars.nasa.gov/msl/spacecraft/instruments/dan/.

[11] “Rad.” *NASA*, NASA, 22 Apr. 2020, https://mars.nasa.gov/msl/spacecraft/instruments/rad/.

[12] “Radiation Assessment Detector.” *Wikipedia*, Wikimedia Foundation, 11 Mar. 2023, https://en.wikipedia.org/wiki/Radiation_assessment_detector.

[13] “Radar Imager for Mars' Subsurface Exploration (RIMFAX).” *NASA*, NASA, https://mars.nasa.gov/mars2020/spacecraft/instruments/rimfax/.

[14] *Mars 2020 Rimfax Archive*, University of California Los Angeles (UCLA), https://pds-geosciences.wustl.edu/m2020/urn-nasa-pds-mars2020_rimfax/document/rimfax_cdr_sis.pdf.

[15] Hassler, Don. “Calibration of the Radiation Assessment Detector (RAD) for MSL - Wrmiss.org.” *Southwest Research Institute*, 8 Sept. 2008, https://wrmiss.org/workshops/thirteenth/Hassler.pdf.

[16] *New products*. Eurosat Distribution, Eurosat London & Eurosat Eastern. (n.d.). Retrieved April 2, 2023, from https://www.eurosatlondon.com/webshop/new-products/.

[17] *QHG-8G04. Antenna Giken Co.,Ltd., https://www.antenna-giken.co.jp/global/.*

[18] *"NASA Mars Exploration." NASA, NASA, 3 June 2014, https://mars.nasa.gov/.*

[19] *Space Dynamics Laboratory*, https://sdl.usu.edu/.

[20] Russell, P. and Sullivan, M. (2021) *Radar Imager for Mars' subsurFAce eXperiment (RIMFAX)*. PDS Archive Calibrated Data Record (CDR). https://pds-geosciences.wustl.edu/m2020/urn-nasa-pds-mars2020_rimfax/document/rimfax_cdr_sis.pdf.

[21] Space Research Institute (no date) *DAN PDS Data processing flow*. Russian Academy of Sciences. Available at: https://pds-geosciences.wustl.edu/msl/msl-m-dan-3_4-rdr-v1/msldan_1xxx/calib/dan_calibration_report.pdf.

[22] NASA *Calibration targets*, *NASA*. NASA. Available at: https://mars.nasa.gov/mer/mission/instruments/calibration-targets/

[23] Dunbar, B. *Pre-launch calibration target for ChemCam*, *NASA*. NASA. Available at: https://www.nasa.gov/mission_pages/msl/multimedia/pia16070.html.

[24] Zeitlin, C., Schweingruber, W. and Ehresmann, B. (2016) *Calibration and characterization of the Radiation Assessment Detector ...* Available at: https://www.researchgate.net/publication/310494228_Calibration_and_Characterization_of_the_Radiation_Assessment_Detector_RAD_on_Curiosity (Accessed: April 18, 2023).