REVISIONS				
ZONE	REV	DESCRIPTION	DATE	APPROVED

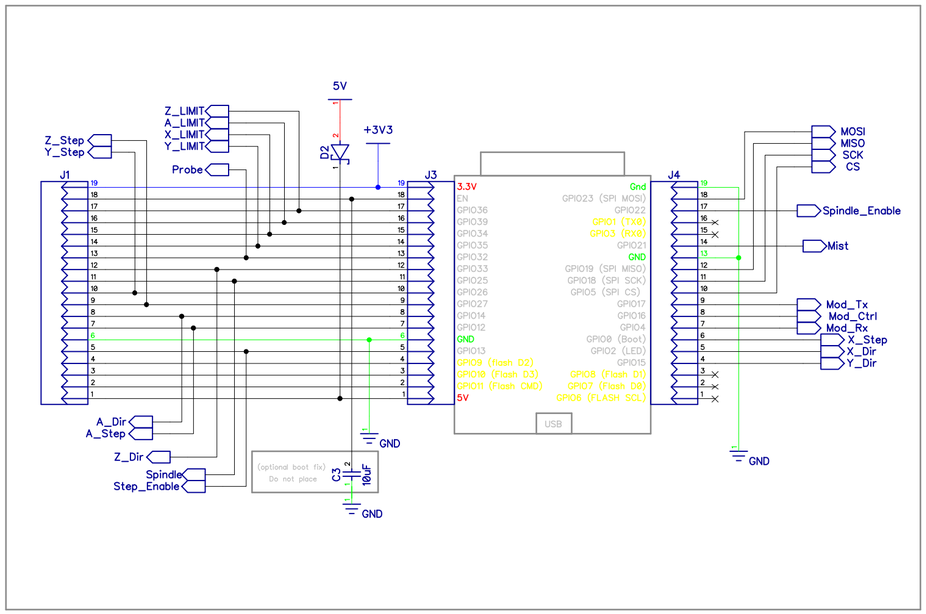

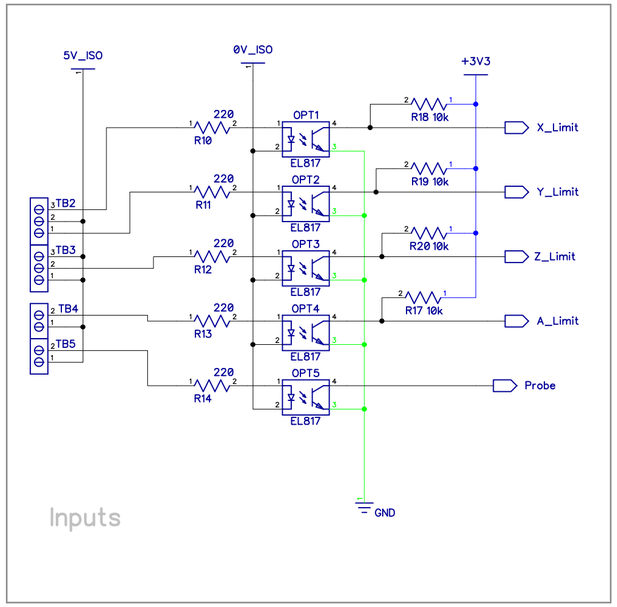

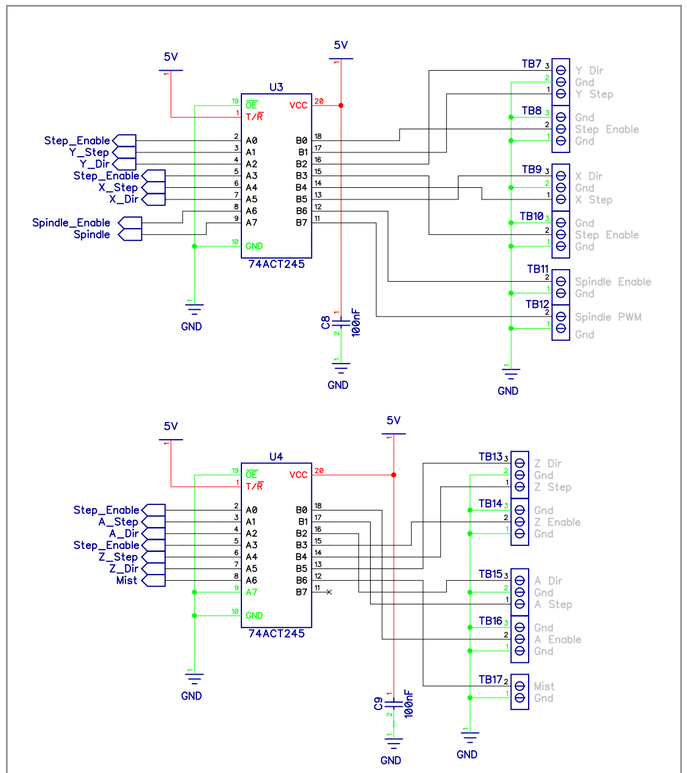

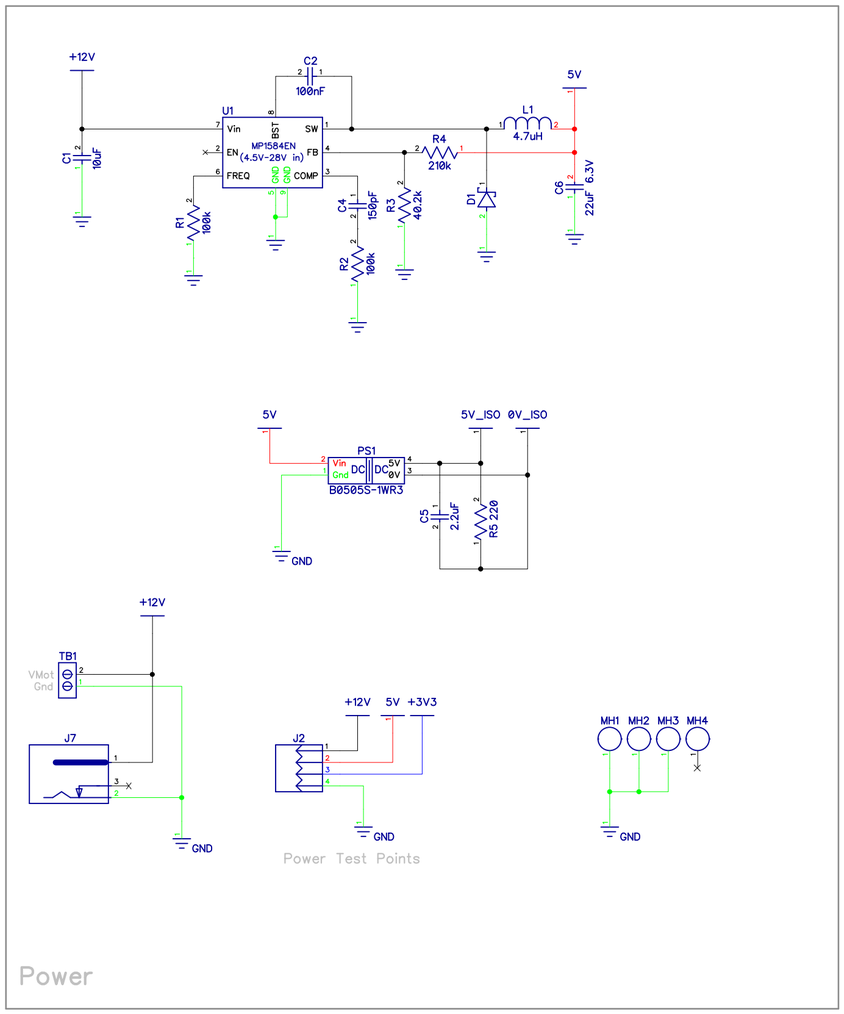

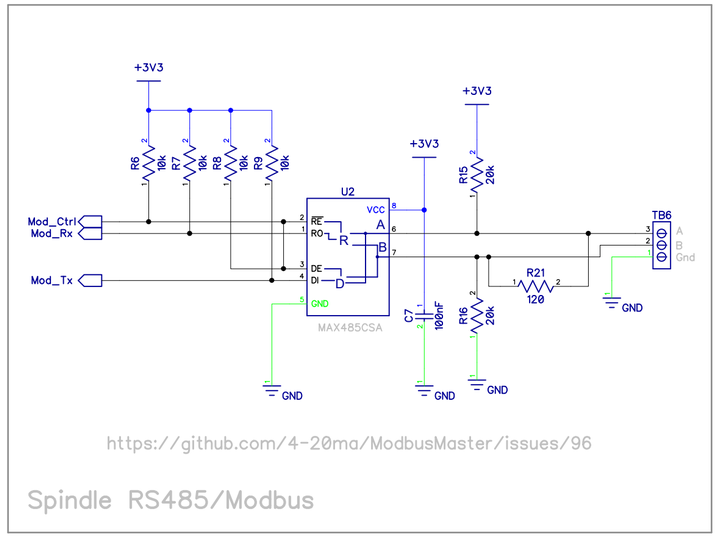

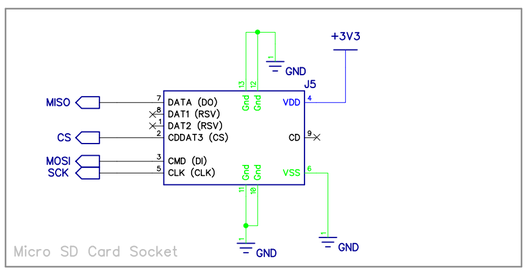

	Grbl_ESP32 External Driver Controller			
	CNC Controller			
Buildlog.net	SIZE	FSCM NO.	DWG NO.	REV 1.2
	SCALE		Sheet 1	