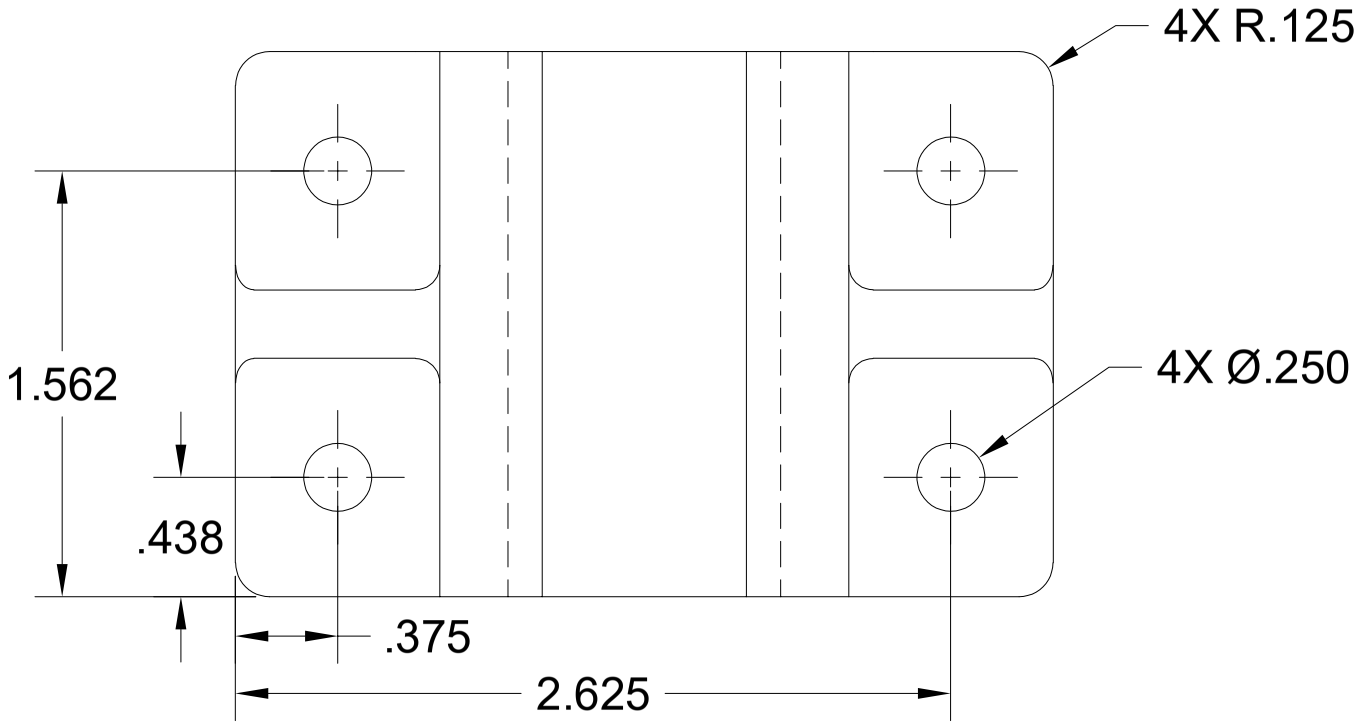

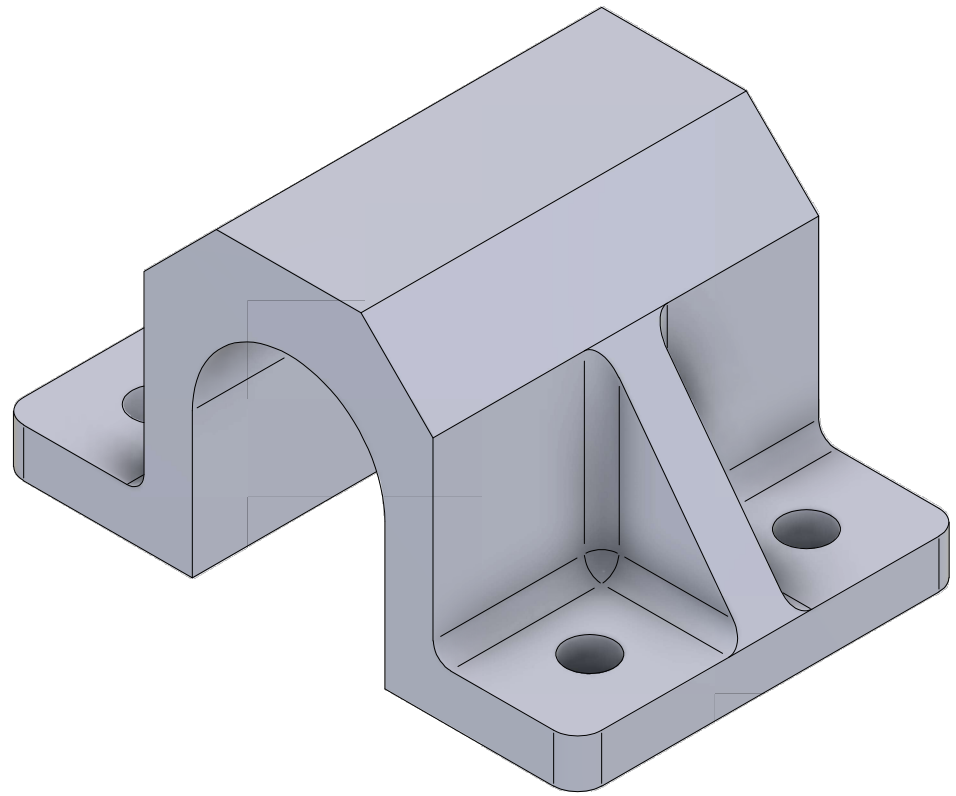

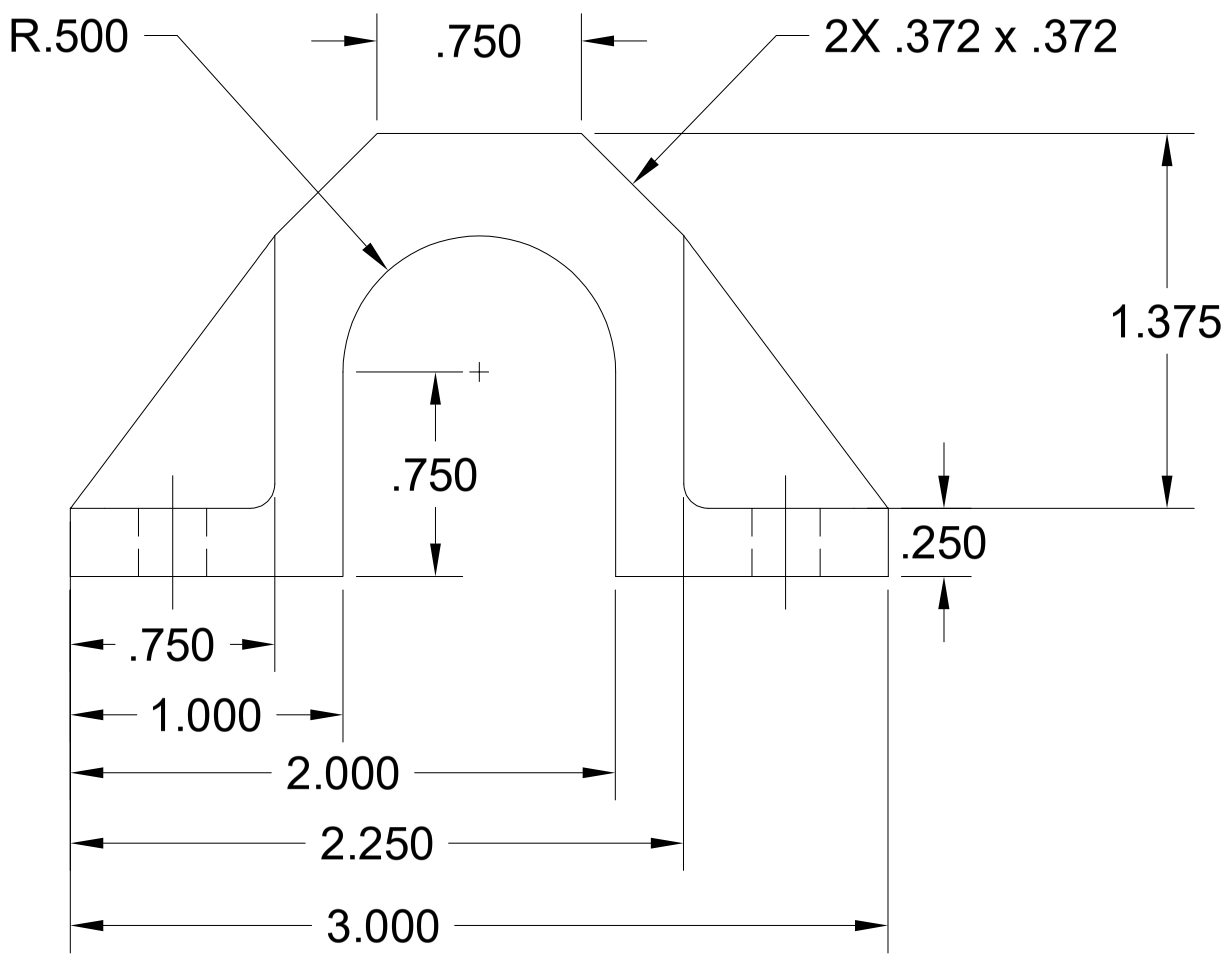

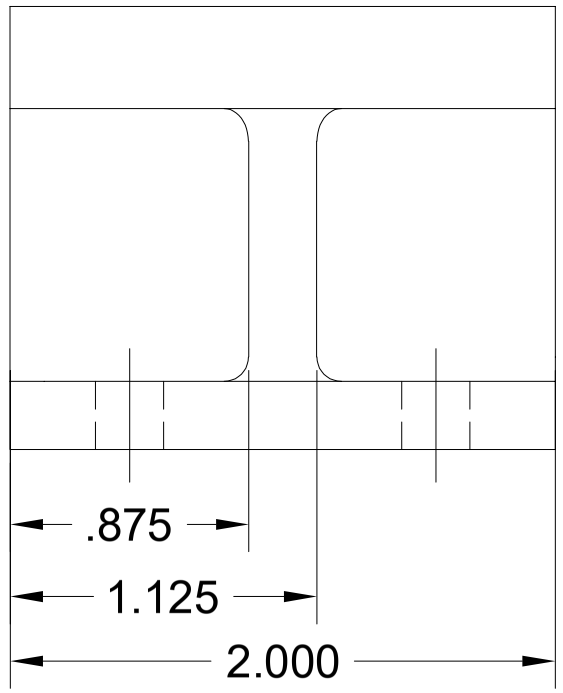

NOTE: Fillet the inside of all corner joints and both sides of all Tee joints to R 0.090
(12 Total Fillets)

Dimentions are in inches Tolerances: Frsctional ± $\frac{1}{32}$ One Place ± .100 Two Places ± .010 Three Places ± .003		Name	Date	Part Name	Problem 3
	Drawn by	Quinn		Part Number	Rev
	Checked			Group Number	
	Approved			Group Name	
	Material L2,P33			SCALE	SHEET