Int. J. Mech. Sci. Vol. 30, No. 10, pp. 743–755, 1988
Printed in Great Britain.

0020–7403/88 $3.00+.00
© 1988 Pergamon Press plc

FREE VIBRATION CHARACTERISTICS OF ROTATING TIMOSHENKO BEAMS

T. YOKOYAMA
Division of Engineering Mechanics, Faculty of Engineering, Osaka University, Suita, Osaka 565, Japan

(*Received* 21 *October* 1987)

Abstract—The in-plane and out-of-plane free vibrations of a rotating Timoshenko beam are analyzed by means of a finite element technique. The beam is discretized into a number of simple elements with four degrees of freedom each. The governing equations for the free vibrations of the rotating beam are derived from Hamilton's principle. The effects of hub radius, setting angle, shear deformation and rotary inertia are incorporated into a finite element model for determining the bending frequencies of the rotating beam. Numerical results for uniform cantilever beams with and without the hub radius are given for various values of the rotational speed, and are compared with the available results. It is shown that the present technique offers an accurate and effective method for solving the free vibration problems of rotating beams.

NOTATION

a_i	ith generalized coordinate
A	cross sectional area of beam
$[B]$	strain–displacement matrix
E	modulus of elasticity
$F_{x'}, F_{z'}$	centrifugal forces
G	modulus of rigidity
I	second moment of inertia
k'	shear correction factor
$[K]$	global stiffness matrix
l	length of beam element
L	length of beam
m	number of beam elements
$[M]$	global mass matrix
$[N]$	shape function matrix
$\{q\}$	global displacement vector
r_g	radius of gyration of the cross section
R_0	hub radius
R	hub radius parameter
t	time
T	kinetic energy
U	strain energy
w	transverse displacement
W	potential energy due to centrifugal force
x', y', z'	local coordinate for beam element
x, y, z	global coordinate axes with origin at the root of beam
X, Y, Z	global coordinate axes with origin at the center of hub
α	rotational speed parameter
θ	bending rotation
κ	curvature
λ	natural frequency parameter
ν	Poisson's ratio
ξ	non-dimensional axial coordinate ($0 \leqslant \xi \leqslant 1$)
ρ	mass density
ϕ	shear strain (or shear rotation)
Φ	shear deformation parameter
ψ	setting angle
ω	natural frequency
Ω	rotational speed

superscripts

e	element
$[\ ]^T$	matrix transpose
$(\ )$	time derivative

subscripts

b bending
c centrifugal
r rotary
s shear
t translational

1. INTRODUCTION

It is very important to know the dynamic characteristics of rotating blades in the design of rotating structural elements such as turbine blades, aircraft propellers and helicopter rotors. These characteristics—i.e. the natural frequencies and associated mode shapes—are required to determine resonant responses and for forced vibration analyses. Since the blades are generally idealized as cantilever beams, the vibrations of rotating cantilever beams have been extensively studied by numerous authors using a variety of methods; for example, we mention here the Southwell principle [1–3], the Rayleigh–Ritz method [1–3, 6, 7], the perturbation technique [4, 5], the Myklestad method [8], the transfer matrix approach [9, 13], the method of integral equations [10], the Galerkin procedure [12] and several forms of the finite element technique [11, 14–17]. The effects of hub radius [2, 4, 6, 8, 12, 14, 17], setting angle [6, 8, 12, 15] and tip mass [3, 5, 8, 10, 14, 15] on the bending frequencies of uniform rotating beams have been investigated, especially in connection with the design of helicopter and turbo-machinery blades. However, most of the existing studies, except Refs [9, 12, 14], have been concerned with obtaining the fundamental frequency only for out-of-plane vibration (where the setting angle $\psi = 0°$) and have neglected the effects of shear deformation and rotary inertia. In Ref. [9] the relative importance of both effects was not well discussed. In Ref. [14] only the in-plane vibrations of rotating Timoshenko beams were considered.

The purpose of the present study is to develop a finite element procedure for analyzing the vibration characteristics of the rotating Timoshenko beam. The governing equations for the free vibrations of the beam both in the plane and out of the plane of rotation are derived using Hamilton's principle. The effects of hub radius, setting angle, shear deformation and rotary inertia are incorporated into a finite element model. Numerical results for uniform rotating beams with and without the hub radius are presented and compared with the available results. In particular, the relative effects of shear deformation and rotary inertia on the natural frequencies of the rotating beams are investigated.

2. FORMULATION OF PROBLEM

Let us consider a uniform beam with the hub radius R_0 and length L rotating at a constant angular velocity of Ω (rad s^{-1}) about the Z-axis (Fig. 1). X, Y, Z is a system of global coordinate axes with the origin at the center of the rotating hub, while x, y, z is a system of global coordinate axes with the origin at the root of the beam. The x-axis is along the length of the beam, the y-axis is along the width and the z-axis is along the thickness. The mid-plane of the beam is inclined to the plane of rotation at an angle ψ (called the setting angle). For $\psi = 0°$, the motion is purely out-of-plane (flapping) and for $\psi = 90°$, the motion is purely in-plane (lead–lag).

In the present approach the beam is divided into—elements of equal length $l = L/m$, as shown in Fig. 2. The element consists of two nodes i and j; each node has the degrees of freedom of transverse displacement w and bending rotation θ. It is assumed that: (1) the transverse displacements of the beam are sufficiently small; (2) the cross sections initially perpendicular to the neutral axis of the beam remain plane, but no longer perpendicular to the neutral axis during bending; (3) the hub is rigid; (4) Coriolis effects are negligible.

2.1. *Derivation of element matrices*

The strain energy U^e of the $(n+1)$th uniform rotating beam element of length l is given by

$$U^e = \frac{1}{2}\int_0^l EI\left(\frac{\partial\theta}{\partial x'}\right)^2 \mathrm{d}x' + \frac{1}{2}\int_0^l k'GA\left(\frac{\partial w}{\partial x'} - \theta\right)^2 \mathrm{d}x' + \frac{1}{2}\int_0^l F_{x'}\left(\frac{\partial w}{\partial x'}\right)^2 \mathrm{d}x'. \tag{1}$$

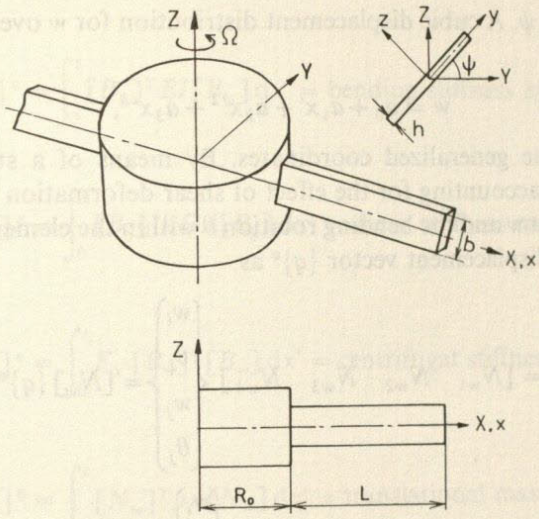

FIG. 1. Configuration of a uniform Timoshenko beam mounted on a rotating hub; coordinate system.

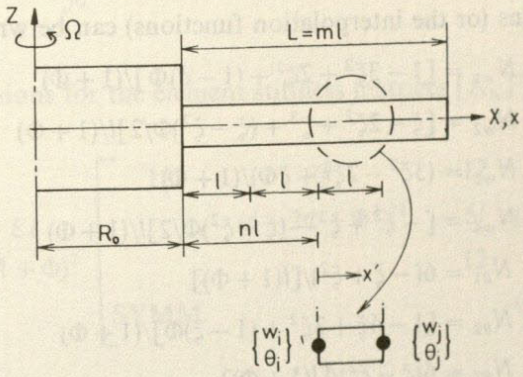

FIG. 2. Location of the Timoshenko beam element under consideration.

The first term in equation (1) represents the flexural strain energy, the second term the shear strain energy and the last term the strain energy due to the centrifugal force $F_{x'}$, which can be obtained as

$$F_{x'} = A\int_{x'}^{l} \rho\Omega^2 (R_0 + nl + x')\,\mathrm{d}x' + A\int_{(n+1)l}^{ml} \rho\Omega^2 (R_0 + x)\,\mathrm{d}x$$

$$= A\rho\Omega^2 l^2 \left[\frac{R_0}{l}(m-n) + \frac{1}{2}(m^2 - n^2) - \left(\frac{R_0}{l} + n\right)\left(\frac{x'}{l}\right) - \frac{1}{2}\left(\frac{x'}{l}\right)^2\right],$$

where x' represents the local coordinate for the element. The kinetic energy T^e of the beam element is given by

$$T^e = \frac{1}{2}\int_0^l \rho A\left(\frac{\partial w}{\partial t}\right)^2 \mathrm{d}x' + \frac{1}{2}\int_0^l \rho I\left(\frac{\partial \theta}{\partial t}\right)^2 \mathrm{d}x'. \tag{2}$$

The first term in equation (2) gives the translational kinetic energy and the second term the rotational kinetic energy.

The potential energy W^e due to the centrifugal force $F_{z'}$ per unit volume acting on the beam in the z' direction can be written as

$$W^e = -\frac{1}{2}\int_0^l F_{z'} wA\,\mathrm{d}x', \tag{3}$$

where $F_{z'} = \rho\Omega^2 w \sin^2\psi$. A cubic displacement distribution for w over the beam element is assumed as

$$w = a_0 + a_1 x' + a_2 x'^2 + a_3 x'^3, \tag{4}$$

where a_0 to a_3 are the generalized coordinates. By means of a statical moment-shear equilibrium condition accounting for the effect of shear deformation ϕ $(= \partial w/\partial x' - \theta)$, the transverse displacement w and the bending rotation θ within the element can be expressed in terms of the element displacement vector $\{q\}^e$ as

$$w = [N_{w1} \quad N_{w2} \quad N_{w3} \quad N_{w4}] \begin{Bmatrix} w_i \\ \theta_i \\ w_j \\ \theta_j \end{Bmatrix} = [N_w]\{q\}^e, \tag{5}$$

$$\theta = [N_{\theta 1} \quad N_{\theta 2} \quad N_{\theta 3} \quad N_{\theta 4}] \begin{Bmatrix} w_i \\ \theta_i \\ w_j \\ \theta_j \end{Bmatrix} = [N_\theta]\{q\}^e, \tag{6}$$

where the shape functions (or the interpolation functions) can be written as

$$N_{w1} = [1 - 3\xi^2 + 2\xi^3 + (1-\xi)\Phi]/(1+\Phi)$$
$$N_{w2} = [\xi - 2\xi^2 + \xi^3 + (\xi - \xi^2)\Phi/2]l/(1+\Phi)$$
$$N_{w3} = (3\xi^2 - 2\xi^3 + \xi\Phi)/(1+\Phi)$$
$$N_{w4} = [-\xi^2 + \xi^3 - (\xi - \xi^2)\Phi/2]l/(1+\Phi)$$
$$N_{\theta 1} = 6(-\xi + \xi^2)/[l(1+\Phi)]$$
$$N_{\theta 2} = [1 - 4\xi + 3\xi^2 + (1-\xi)\Phi]/(1+\Phi)$$
$$N_{\theta 3} = 6(\xi - \xi^2)/[l(1+\Phi)]$$
$$N_{\theta 4} = (-2\xi + 3\xi^2 + \xi\Phi)/(1+\Phi)$$
$$\xi = x'/l$$
$$\Phi = 12EI/(k'GAl^2).$$

The curvature κ and the shear strain ϕ within the element are expressed as

$$\kappa = \frac{\partial\theta}{\partial x'} = [B_b]\{q\}^e \tag{7}$$

$$\phi = \frac{\partial w}{\partial x'} - \theta = [B_s]\{q\}^e, \tag{8}$$

where

$$[B_b] = \frac{\partial}{\partial x'}[N_\theta]$$

$$[B_s] = \frac{\partial}{\partial x'}[N_w] - [N_\theta] = [B_w] - [N_\theta].$$

With the help of equations (5)–(8), the strain energy U^e, the kinetic energy T^e and the potential energy W^e can be written in terms of the element displacement vector $\{q\}^e$ as

$$U^e = \tfrac{1}{2}\{q\}^{e,T}[K_b]^e\{q\}^e + \tfrac{1}{2}\{q\}^{e,T}[K_s]^e\{q\}^e + \tfrac{1}{2}\{q\}^{e,T}[K_c]^e\{q\}^e \tag{9}$$

$$T^e = \tfrac{1}{2}\{\dot{q}\}^{e,T}[M_t]^e\{\dot{q}\}^e + \tfrac{1}{2}\{\dot{q}\}^{e,T}[M_r]^e\{\dot{q}\}^e \tag{10}$$

$$W^e = -\tfrac{1}{2}\{q\}^{e,T}\Omega^2\sin^2\psi\,[M_t]^e\{q\}^e, \tag{11}$$

where

$$[K_b]^e = \int_0^l [B_b]^T EI [B_b]\,dx' = \text{bending stiffness matrix}$$

$$[K_s]^e = \int_0^l [B_s]^T k'GA [B_s]\,dx' = \text{shear stiffness matrix}$$

$$[K_c]^e = \int_0^l F_{x'} [B_w]^T [B_w]\,dx' = \text{centrifugal stiffness matrix}$$

$$[M_t]^e = \int_0^l [N_w]^T \rho A [N_w]\,dx' = \text{translational mass matrix}$$

$$[M_r]^e = \int_0^l [N_\theta]^T \rho I [N_\theta]\,dx' = \text{rotary inertia mass matrix.}$$

The explicit expressions for the element stiffness matrices $[K_b]^e$ and $[K_s]^e$ are given as

$$[K_b]^e = \frac{EI}{l^3(1+\Phi)^2}\begin{bmatrix} 12 & 6l & -12 & 6l \\ & (4+2\Phi+\Phi^2)l^2 & -6l & (2-2\Phi-\Phi^2)l^2 \\ & & 12 & -6l \\ \text{SYMM.} & & & (4+2\Phi+\Phi^2)l^2 \end{bmatrix}$$

$$[K_s]^e = \frac{k'GA\Phi^2}{4l(1+\Phi)^2}\begin{bmatrix} 4 & 2l & -4 & 2l \\ & l^2 & -2l & l^2 \\ & & 4 & -2l \\ \text{SYMM.} & & & l^2 \end{bmatrix}.$$

The element centrifugal stiffness matrix $[K_c]^e$ can be written in three parts as

$$[K_c]^e = [K_{c_0}]^e + [K_{c_1}]^e + [K_{c_2}]^e,$$

where

$$[K_{c_0}]^e = \frac{Al\rho\Omega^2 c_0^*}{(1+\Phi)^2} \times$$

$$\begin{bmatrix} \frac{6}{5}+2\Phi+\Phi^2 & \frac{1}{10}l & -\left(\frac{6}{5}+2\Phi+\Phi^2\right) & \frac{1}{10}l \\ & \left(\frac{2}{15}+\frac{\Phi}{6}+\frac{\Phi^2}{12}\right)l^2 & -\frac{1}{10}l & -\left(\frac{1}{30}+\frac{\Phi}{6}+\frac{\Phi^2}{12}\right)l^2 \\ & & \frac{6}{5}+2\Phi+\Phi^2 & -\frac{1}{10}l \\ \text{SYMM.} & & & \left(\frac{2}{15}+\frac{\Phi}{6}+\frac{\Phi^2}{12}\right)l^2 \end{bmatrix}$$

$$[K_{c_1}]^e = \frac{Al\rho\Omega^2 c_1^*}{(1+\Phi)^2}\times$$

$$\begin{bmatrix} \frac{3}{5}+\Phi+\frac{\Phi^2}{2} & \left(\frac{1}{10}+\frac{2\Phi}{15}+\frac{\Phi^2}{12}\right)l & -\left(\frac{3}{5}+\Phi+\frac{\Phi^2}{2}\right) & -\left(\frac{2\Phi}{15}+\frac{\Phi^2}{12}\right)l \\ & \left(\frac{1}{30}+\frac{\Phi}{20}+\frac{\Phi^2}{24}\right)l^2 & -\left(\frac{1}{10}+\frac{2\Phi}{15}+\frac{\Phi^2}{12}\right)l & -\left(\frac{1}{60}+\frac{\Phi}{12}+\frac{\Phi^2}{24}\right)l^2 \\ & & \frac{3}{5}+\Phi+\frac{\Phi^2}{2} & \left(\frac{2\Phi}{15}+\frac{\Phi^2}{12}\right)l \\ \text{SYMM.} & & & \left(\frac{1}{10}+\frac{7\Phi}{60}+\frac{\Phi^2}{24}\right)l^2 \end{bmatrix}$$

$$[K_{c_2}]^e = \frac{Al\rho\Omega^2 c_2^*}{(1+\Phi)^2}\times$$

$$\begin{bmatrix} \frac{12}{35}+\frac{3\Phi}{5}+\frac{\Phi^2}{3} & \left(\frac{1}{14}+\frac{7\Phi}{60}+\frac{\Phi^2}{12}\right)l & -\left(\frac{12}{35}+\frac{3\Phi}{5}+\frac{\Phi^2}{3}\right) & -\left(\frac{1}{35}+\frac{3\Phi}{20}+\frac{\Phi^2}{12}\right)l \\ & \left(\frac{2}{105}+\frac{\Phi}{30}+\frac{\Phi^2}{30}\right)l^2 & -\left(\frac{1}{14}+\frac{7\Phi}{60}+\frac{\Phi^2}{12}\right)l & -\left(\frac{1}{70}+\frac{\Phi}{15}+\frac{\Phi^2}{30}\right)l^2 \\ & & \frac{12}{35}+\frac{3\Phi}{5}+\frac{\Phi^2}{3} & \left(\frac{1}{35}+\frac{3\Phi}{20}+\frac{\Phi^2}{12}\right)l \\ \text{SYMM.} & & & \left(\frac{3}{35}+\frac{\Phi}{10}+\frac{\Phi^2}{30}\right)l^2 \end{bmatrix}$$

Here $c_0^* = \frac{R_0}{l}(m-n)+\frac{1}{2}(m^2-n^2)$, $c_1^* = -\left(\frac{R_0}{l}+n\right)$ and $c_2^* = -1/2$.

The explicit expressions for the element mass matrices $[M_t]^e$ and $[M_r]^e$ are given as:

$$[M_t]^e = \frac{\rho Al}{(1+\Phi)^2}\times$$

$$\begin{bmatrix} \frac{13}{35}+\frac{7\Phi}{10}+\frac{\Phi^2}{3} & \left(\frac{11}{210}+\frac{11\Phi}{120}+\frac{\Phi^2}{24}\right)l & \frac{9}{70}+\frac{3\Phi}{10}+\frac{\Phi^2}{6} & -\left(\frac{13}{420}+\frac{3\Phi}{40}+\frac{\Phi^2}{24}\right)l \\ & \left(\frac{1}{105}+\frac{\Phi}{60}+\frac{\Phi^2}{120}\right)l^2 & \left(\frac{13}{420}+\frac{3\Phi}{40}+\frac{\Phi^2}{24}\right)l & -\left(\frac{1}{140}+\frac{\Phi}{60}+\frac{\Phi^2}{120}\right)l^2 \\ & & \frac{13}{35}+\frac{7\Phi}{10}+\frac{\Phi^2}{3} & -\left(\frac{11}{210}+\frac{11\Phi}{120}+\frac{\Phi^2}{24}\right)l \\ \text{SYMM.} & & & \left(\frac{1}{105}+\frac{\Phi}{60}+\frac{\Phi^2}{120}\right)l^2 \end{bmatrix}$$

$$[M_r]^e = \frac{\rho A l}{(1+\Phi)^2}\left(\frac{r_g}{l}\right)^2 \times \begin{bmatrix} \frac{6}{5} & \left(\frac{1}{10}-\frac{\Phi}{2}\right)l & -\frac{6}{5} & \left(\frac{1}{10}-\frac{\Phi}{2}\right)l \\ & \left(\frac{2}{15}+\frac{\Phi}{6}+\frac{\Phi^2}{3}\right)l^2 & -\left(\frac{1}{10}-\frac{\Phi}{2}\right)l & -\left(\frac{1}{30}+\frac{\Phi}{6}-\frac{\Phi^2}{6}\right)l^2 \\ & & \frac{6}{5} & -\left(\frac{1}{10}-\frac{\Phi}{2}\right)l \\ \text{SYMM.} & & & \left(\frac{2}{15}+\frac{\Phi}{6}+\frac{\Phi^2}{3}\right)l^2 \end{bmatrix},$$

where r_g $(=\sqrt{I/A})$ is the radius of gyration of the cross section. If the shear deformation parameter Φ and the rotary inertia mass matrix $[M_r]^e$ are disregarded, the present model reduces to the classical Euler–Bernoulli beam model used by Hoa [15]. Specifically, when the centrifugal stiffness matrix $[K_c]^e$ only is dropped, the resulting element corresponds to the Timoshenko beam element derived by Archer [19].

2.2. *The eigenvalue problem*

The sum of the individual element energies over the entire beam using equations (9)–(11) gives the total dynamic potential energy or the Lagrangian function, i.e.

$$\mathscr{L} = \sum_{e=1}^{m} (U^e - T^e + W^e). \tag{12}$$

Substituting $\mathscr{L}$ into Hamilton's principle yields the matrix equation for the free vibrations of the rotating Timoshenko beam as

$$([K] - \Omega^2 \sin^2\psi\,[M_t])\{q\} + [M]\{\ddot{q}\} = \{0\}, \tag{13}$$

where

$$[K] = \sum_{e=1}^{m} ([K_b]^e + [K_s]^e + [K_c]^e) \text{ —global stiffness matrix}$$

$$[M_t] = \sum_{e=1}^{m} [M_t]^e \text{ —global translational mass matrix}$$

$$[M] = \sum_{e=1}^{m} ([M_t]^e + [M_r]^e) \text{ —global mass matrix}$$

$$\{q\} = \sum_{e=1}^{m} \{q\}^e \text{ —global displacement vector.}$$

On assuming the solutions of equation (13) in the familiar form

$$\{q\} = \{q^*\}\exp(i\omega t), \tag{14}$$

we have the following eigenvalue problem:

$$([K] - \Omega^2 \sin^2\psi[M_t] - \omega^2[M])\{q^*\} = \{0\}, \tag{15}$$

where $\{q^*\}$ is a vector of displacement amplitudes of vibration and ω is the frequency of harmonic vibrations. The solution of equation (15) gives the natural frequencies and the corresponding mode shapes.

3. NUMERICAL EXAMPLES AND DISCUSSION

Several examples of the rotating beam vibration problem are given to demonstrate the applicability of the present model. A computer program has been developed to compute the natural frequencies of flexural vibrations of non-rotating and rotating beams. The matrix

eigenvalue equation (15) was solved by using the QR method [20] on an ACOS 1000 computer in double precision. (A double precision word consists of 72 bits on the ACOS 1000). The numerical results are expressed in terms of the following parameters:

$$\alpha^2 = \Omega^2(\rho A L^4/EI) \quad \text{—rotational speed parameter}$$

$$\lambda^2 = \omega^2(\rho A L^4/EI) \quad \text{—natural frequency parameter}$$

$$R = R_0/L \quad \text{—hub radius parameter.}$$

3.1. *Euler–Bernoulli beams*

Since the exact natural frequencies of the rotating beams are unknown, it is instructive to consider first two rotating cantilever Euler–Bernoulli beams with and without the hub radius, both of which have already been solved by different methods. Table 1 gives the first and second natural frequencies for out-of-plane vibrations of the rotating cantilever beams for various values of the rotational speed. The present results obtained using eight elements show excellent agreement with the essentially exact solutions obtained by Hodges and Rutkowski [17] using a single beam element with a 15th-order displacement function. Owing to the stiffening effect of the centrifugal forces, the natural frequencies are found to increase with the rotational speed and the hub radius.

Table 2 presents the first and second natural frequencies for in-plane vibrations of the rotating cantilever beams over a wide range of rotational speeds. The numerical results, also obtained using eight elements, agree well with those obtained by Putter and Manor [14] using five higher-order beam elements. The number of elements used is different, but the total numbers of degrees of freedom are the same for both results. A comparison between the natural frequencies at the identical rotational speeds in Tables 1 and 2 indicates that the out-of-plane vibration frequencies are always higher than the in-plane vibration frequencies. This is because the natural frequencies of the rotating beams are affected by the term $\Omega^2 \sin^2\psi$ in equation (15) and decrease as the setting angle ψ increases.

3.2. *Timoshenko beams*

We next consider two rotating Timoshenko beams with different slenderness ratios to examine the effects of shear deformation and rotary inertia. Most of the investigations on this problem [9, 12, 14] lack sufficient information to adequately reproduce the results. Wang *et al.* [12] only presented the tabulated results for the natural frequencies of two rotating Timoshenko beams with the hub radius at a specified value of the rotational speed. The physical and geometrical properties of the two Timoshenko beams are given as:

(a) beam A: slenderness ratio $L/r_g = 10$ (thick beam)

(b) beam B: slenderness ratio $L/r_g = 20$ (thin beam),

TABLE 1. NATURAL FREQUENCY PARAMETERS OF ROTATING CANTILEVER EULER–BERNOULLI BEAMS WITH AND WITHOUT HUB RADIUS ($\psi = 0°$: OUT-OF-PLANE VIBRATIONS)

α	Hub radius parameter R	1st mode (λ_1) 0	1st mode (λ_1) 1	2nd mode (λ_2) 0	2nd mode (λ_2) 1
0	Present work	3.516	3.516	22.036	23.036
	Ref. [17]	3.516	3.516	22.034	22.034
2	Present work	4.137	4.834	22.617	23.368
	Ref. [17]	4.137	4.834	22.615	23.366
4	Present work	5.585	7.475	24.275	26.959
	Ref. [17]	5.585	7.475	24.273	26.957
6	Present work	7.360	10.444	26.811	32.030
	Ref. [17]	7.360	10.444	26.809	32.027
8	Present work	9.257	13.509	29.998	37.959
	Ref. [17]	9.257	13.507	29.995	37.954
10	Present work	11.203	16.609	33.643	44.378
	Ref. [17]	11.202	16.606	33.640	44.368

TABLE 2. NATURAL FREQUENCY PARAMETERS OF ROTATING CANTILEVER EULER–BERNOULLI BEAMS WITH AND WITHOUT HUB RADIUS ($\psi = 90°$: IN-PLANE VIBRATIONS)

α	Hub radius parameter R	1st mode (λ_1) 0	1st mode (λ_1) 1	2nd mode (λ_2) 0	2nd mode (λ_2) 1
0	Present work	3.516	3.516	22.036	22.036
	Ref. [14]	—*	—	—	—
2	Present work	3.622	4.401	22.528	23.282
	Ref. [14]	3.612	4.401	22.526	23.280
5	Present work	4.074	7.412	24.952	28.926
	Ref. [14]	4.074	7.412	24.950	28.924
10	Present work	5.050	13.261	32.123	43.237
	Ref. [14]	5.049	13.258	32.120	43.227
20	Present work	6.794	25.318	51.372	76.659
	Ref. [14]	6.776	25.288	51.353	76.594
50	Present work	10.899	61.881	116.417	182.386
	Ref. [14]	10.481	61.641	116.200	181.936

*The dashes mean that the numerical data are not reported in Ref. [14].

TABLE 3. EFFECT OF SETTING ANGLE ON NATURAL FREQUENCY PARAMETERS OF ROTATING CANTILEVER TIMOSHENKO BEAMS WITH DIFFERENT SLENDERNESS RATIOS ($\alpha = 10$ AND $R = 3$)

Mode No.	Setting angle	Beam A ($L/r_g = 10$) λ $\psi = 0°$	$\psi = 45°$	$\psi = 90°$	Beam B ($L/r_g = 20$) λ $\psi = 0°$	$\psi = 45°$	$\psi = 90°$
1	Present work	23.050	21.987	20.867	23.524	22.446	21.313
	Ref. [12]	23.037	21.974	20.850	23.514	22.436	21.302
2	Present work	45.598	45.359	45.115	56.105	55.696	55.284
	Ref. [12]	45.428	45.194	44.955	56.072	55.662	55.250
3	Present work	67.716	67.619	67.520	97.188	96.968	96.747
	Ref. [12]	66.854	66.763	66.668	97.011	96.792	96.570
4	Present work	73.076	72.914	72.756	144.490	144.349	144.208
	Ref. [12]	72.313	72.146	71.982	143.815	143.673	143.531

where

Poisson's ratio $\nu = 0.3$ (or $E/G = 13/5$),
shear correction factor $k' = 0.85$ (for rectangular cross section),
setting angle $\psi = 0°, 45°, 90°$,
hub radius parameter $R = 3.0$.

On the basis of the data, the first four natural frequencies of the rotating Timoshenko beams were evaluated to confirm the accuracy of the present model. The natural frequencies of the rotating beams for different values of the setting angle are listed in Table 3. The numerical results obtained using 16 elements are observed to be in close agreement with those obtained by Wang *et al.* using the extended Galerkin method. As anticipated, the slenderness ratio has a significant effect on the higher mode frequencies of the thick beam A. The relative effects of shear deformation and rotary inertia on the natural frequencies of both non-rotating and rotating cantilever beams for in-plane or out-of-plane vibrations are given in Tables 4 and 5, respectively. As reported in Ref. [18], the influence of shear deformation is generally greater than that of rotary inertia on non-rotating beams. Their relative effects, however, may be reversed for the rotating beams—that is, the results of both tables reveal that the influence on the second- or higher order frequencies due to rotary inertia is higher than that due to shear deformation for both in-plane and out-of-plane vibrations. This may be

TABLE 4. RELATIVE EFFECTS OF SHEAR DEFORMATION AND ROTARY INERTIA ON NATURAL FREQUENCY RATIOS OF NON-ROTATING AND ROTATING CANTILEVER A BEAMS ($L/r_g = 10$, $R = 3$ AND $\psi = 0°$)

Mode No.	Non-rotating beam ($\alpha = 0$) λ_{ro}/λ_e	λ_{sh}/λ_e	λ_{rs}/λ_e	Rotating beam ($\alpha = 10$) λ_{ro}/λ_e	λ_{sh}/λ_e	λ_{rs}/λ_e
1	0.978	0.935 ($\lambda_e = 3.516$)*	0.919	0.980	0.980 ($\lambda_e = 23.942$)†	0.963
2	0.868	0.710 ($\lambda_e = 22.034$)	0.660	0.837	0.952 ($\lambda_e = 59.976$)	0.760
3	0.754	0.560 ($\lambda_e = 61.697$)	0.516	0.729	0.871 ($\lambda_e = 111.771$)	0.606
4	0.647	0.450 ($\lambda_e = 120.902$)	0.403	0.645	0.776 ($\lambda_e = 180.850$)	0.404

λ_{ro}: with rotary inertia effect only
λ_{sh}: with shear deformation effect only
λ_{rs}: with both rotary inertia and shear deformation effects
* Values in parentheses indicate the exact frequency parameters of a non-rotating cantilever Euler–Bernoulli beam.
† Values in parentheses denote the computed frequency parameters of a rotating cantilever Euler–Bernoulli beam using 16 elements.

TABLE 5. RELATIVE EFFECTS OF SHEAR DEFORMATION AND ROTARY INERTIA ON NATURAL FREQUENCY RATIOS OF NON-ROTATING AND ROTATING CANTILEVER B BEAMS ($L/r_g = 20$, $R = 3$ AND $\psi = 90°$)

Mode No.	Non-rotating beam ($\alpha = 0$) λ_{ro}/λ_e	λ_{sh}/λ_e	λ_{rs}/λ_e	Rotating beam ($\alpha = 10$) λ_{ro}/λ_e	λ_{sh}/λ_e	λ_{rs}/λ_e
1	0.994	0.983 ($\lambda_e = 3.516$)	0.977	0.995	0.984 ($\lambda_e = 21.754$)	0.980
2	0.962	0.895 ($\lambda_e = 22.034$)	0.869	0.954	0.974 ($\lambda_e = 59.136$)	0.935
3	0.916	0.797 ($\lambda_e = 61.697$)	0.760	0.904	0.932 ($\lambda_e = 111.323$)	0.869
4	0.859	0.701 ($\lambda_e = 120.902$)	0.660	0.853	0.870 ($\lambda_e = 180.573$)	0.799

See Table 4 for explanation of abbreviations.

caused by the centrifugal stiffening effects—depending mainly on the rotational speed, the hub radius and the slenderness ratio of the beam.

In order to study the effect of the rotational speed, the natural frequencies of the Timoshenko beams were determined for different values of the rotational speed. The variations of the first four natural frequencies of the Timoshenko beams with zero and non-zero hub radii with rotational speed are plotted in Figs 3–6, respectively, where those of the corresponding frequencies of the Euler–Bernoulli beams are also presented for the purpose of comparison. It can be seen from the figures that the higher mode frequencies of the rotating beams decrease remarkably on account of the shear deformation and rotary inertia effects irrespective of the setting angle and the hub radius. Furthermore, it is observed that for both Euler–Bernoulli and Timoshenko beams, the difference between the in-plane and out-of-plane frequencies is a maximum for the first mode and becomes insignificant for higher modes—i.e. the effect of setting angle becomes negligible beyond the second mode. The reason for this is that since $\Omega^2 \sin^2\psi$ does not vary with the different modes, the effect of setting angle on the natural frequencies decreases for higher modes. It is important to note

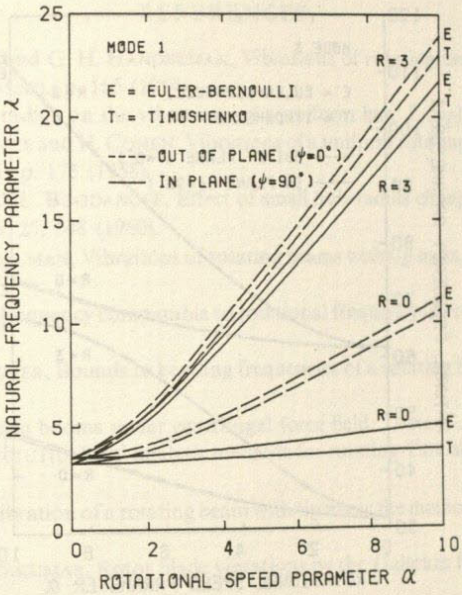

FIG. 3. Variation of the first natural frequencies of Euler–Bernoulli and Timoshenko beams with rotational speed.

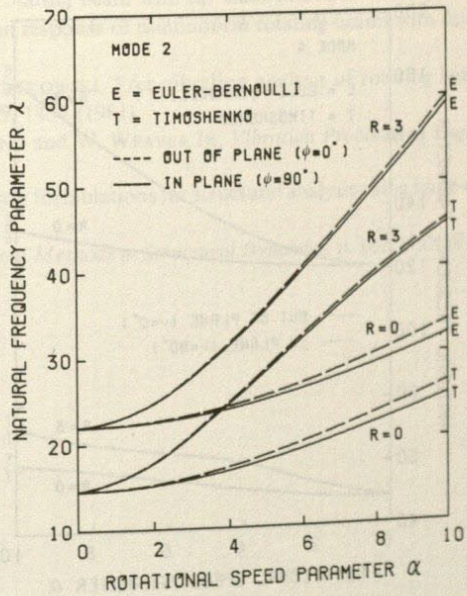

FIG. 4. Variation of the second natural frequencies of Euler–Bernoulli and Timoshenko beams with rotational speed.

that the difference between the in-plane and out-of-plane vibrations of both beams decreases with increasing hub radius.

4. CONCLUSIONS

The finite element procedure has been developed for determining the free vibration characteristics of rotating beams. The effects of hub radius, setting angle, shear deformation and rotary inertia on the natural frequencies of the rotating beams have been examined. The numerical results indicate that the natural frequencies increase with the rotational speed and/or the hub radius of the beam, that the effect of setting angle on the higher mode frequencies is insignificant and that the effects of shear deformation and rotary inertia on the

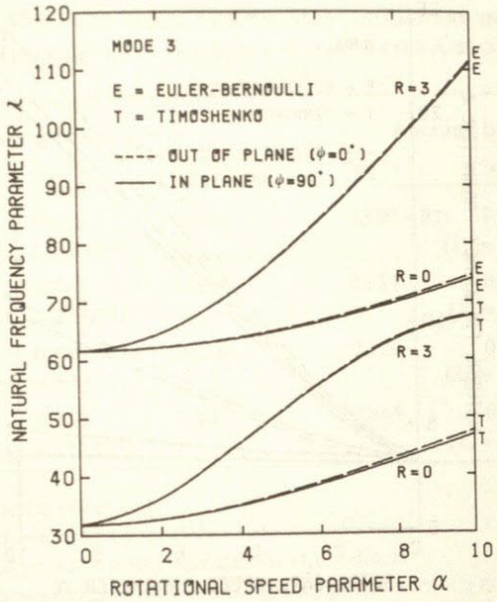

FIG. 5. Variation of the third natural frequencies of Euler–Bernoulli and Timoshenko beams with rotational speed.

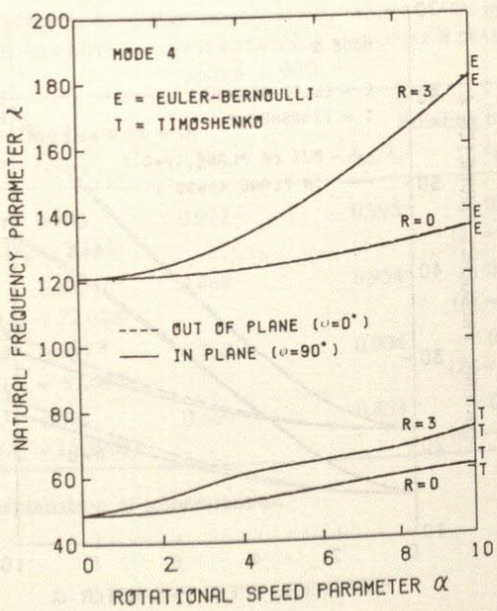

FIG. 6. Variation of the fourth natural frequencies of Euler–Bernoulli and Timoshenko beams with rotational speed.

natural frequencies increase appreciably with mode number. It should be noted that the effect of shear deformation on the natural frequencies is generally larger than that of rotary inertia for non-rotating beams, but their relative effects may be reversed for the higher mode frequencies of the rotating beams owing to the centrifugal stiffening effects.

Finally, it may be emphasized that, although the numerical examples have been limited to the uniform rotating cantilever beams, the technique described here can readily be applied to non-uniform rotating beams with discontinuities, as well as with other end conditions.

Acknowledgements—The author gratefully acknowledges the financial support of the SAKKOKAI Foundation, Tokyo, for this investigation. Computer time was provided by the Computation Center, Osaka University.

REFERENCES

1. W. E. Boyce, R. C. Diprima and G. H. Handelman, Vibrations of rotating beams of constant section. Proc. 2nd U.S. Natl Cong. Appl. Mech., p. 165 (1954).
2. W. E. Boyce, Effect of hub radius on the vibrations of a uniform bar. *J. appl. Mech.* **23**, 287 (1956).
3. G. H. Handelman, W. E. Boyce and H. Cohen, Vibrations of a uniform rotating beam with tip mass. Proc. 3rd U.S. Natl Cong. Appl. Mech., p. 175 (1958).
4. H. Lo, J. E. Goldberg and J. L. Bogdanoff, Effect of small hub-radius change on bending frequencies of a rotating beam. *J. appl. Mech.* **27**, 548 (1960).
5. W. E. Boyce and G. H. Handelman, Vibrations of rotating beams with tip mass. *Z. Angew. Math. Phys.* **12**, 369 (1961).
6. D. Pnueli, Natural bending frequency comparable to rotational frequency in rotating cantilever beam. *J. appl. Mech.* **39**, 602 (1972).
7. N. Rubinstein and J. T. Stadter, Bounds to bending frequencies of a rotating beam. *J. Franklin Inst.* **294**, 217 (1972).
8. R. Kumar, Vibrations of space booms under centrifugal force field. *Trans. C.A.S.I.* **7**, 1 (1974).
9. R. O. Stafford and V. Giurgiutiu, Semi-analytic methods for rotating Timoshenko beams. *Int. J. Mech. Sci.* **17**, 719 (1975).
10. L. H. Jones, The transverse vibration of a rotating beam with tip mass: the method of integral equations. *Q. appl. Math.* **33**, 193 (1975).
11. V. T. Nagaraj and P. Shantakumar, Rotor blade vibrations by the Galerkin finite element method. *J. Sound Vib.* **43**, 575 (1975).
12. J. T. S. Wang, O. Mahrenholtz and J. Böhm, Extended Galerkin's method for rotating beam vibrations using Legendre polynomials. *Solid Mech. Arch.* **1**, 341 (1976).
13. T. J. McDaniel and V. R. Murthy, Bounds on the dynamic characteristics of rotating beams. *AIAA J.* **15**, 439 (1977).
14. S. Putter and H. Manor, Natural frequencies of radial rotating beams. *J. Sound Vib.* **56**, 175 (1978).
15. S. V. Hoa, Vibrations of a rotating beam with tip mass. *J. Sound Vib.* **67**, 369 (1979).
16. D. H. Hodges, Vibration and response of nonuniform rotating beams with discontinuities. *J. Am. Helicoptor Soc.* **24**, 43 (1979).
17. D. H. Hodges and M. J. Rutkowski, Free-vibration analysis of rotating beams by a variable-order finite-element method. *AIAA J.* **19**, 1459 (1981).
18. S. Timoshenko, D. H. Young and W. Weaver Jr, *Vibration Problems in Engineering*, 4th edn, p. 435. John Wiley, New York (1974).
19. J. S. Archer, Consistent matrix formulations for structural analysis using finite-element techniques. *AIAA J.* **3**, 1910 (1965).
20. L. Meirovitch, *Computational Methods in Structural Dynamics*, p. 162. Sijthoff & Noordhoff, Alphen aan den Rijn (1980).