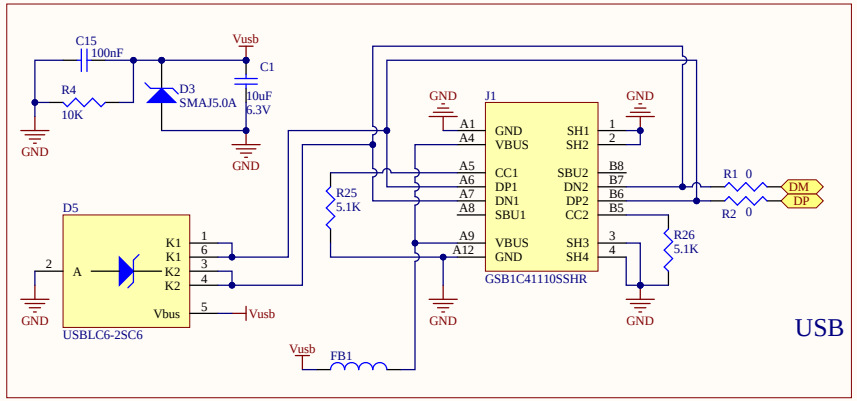

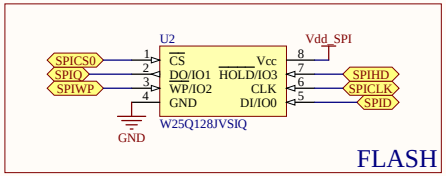

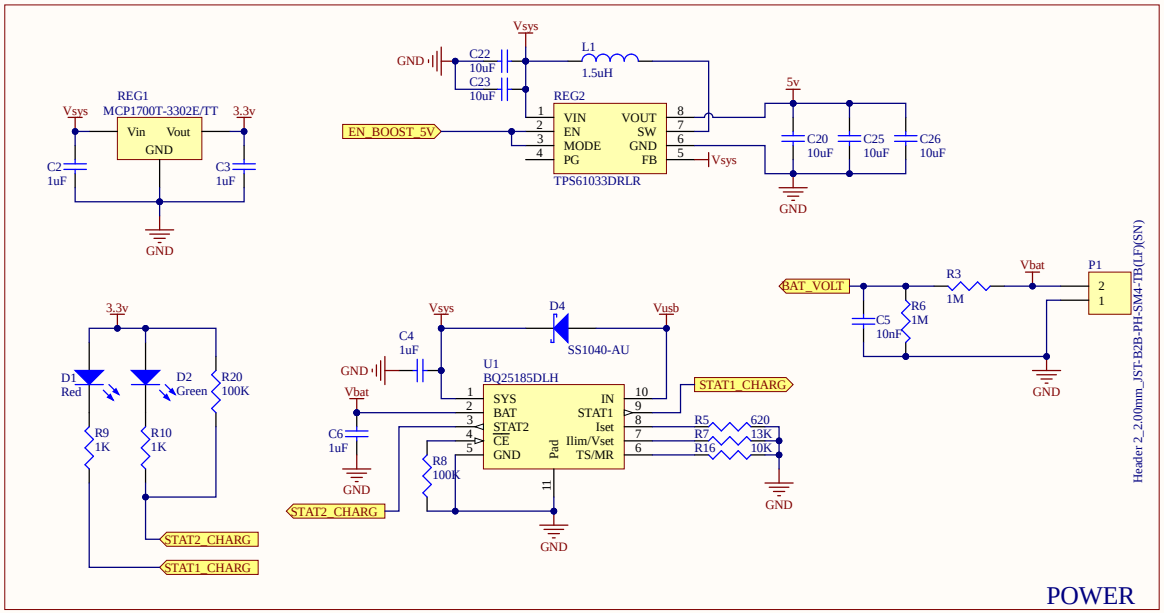

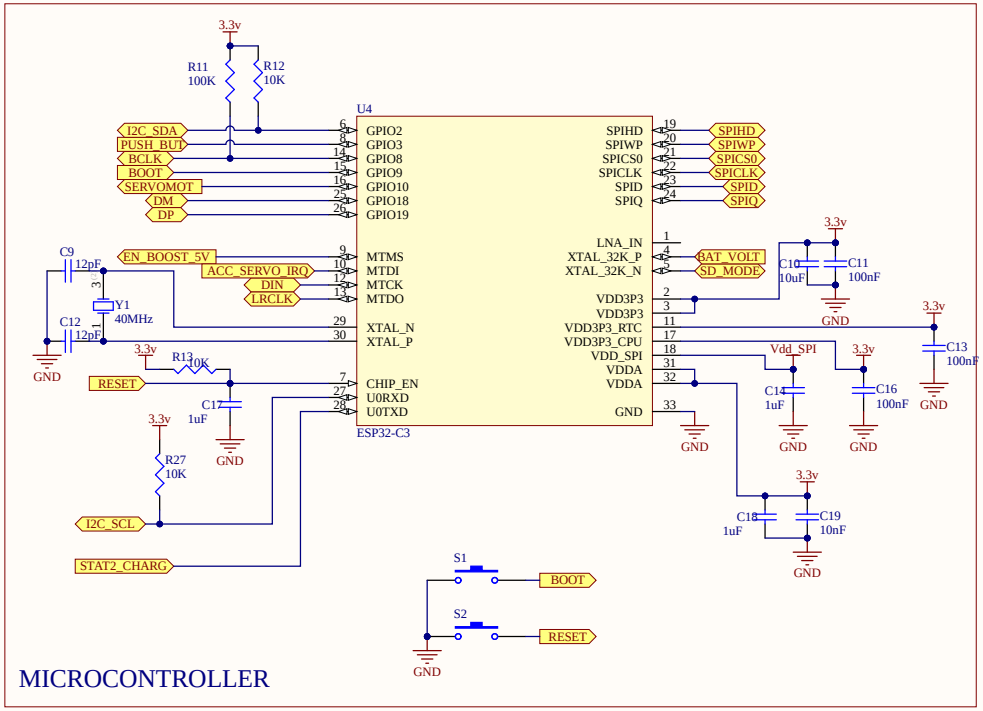

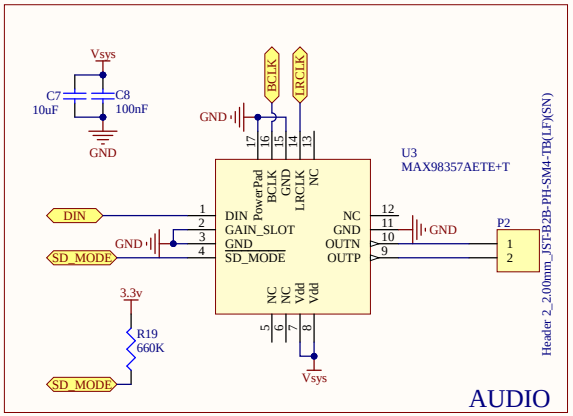

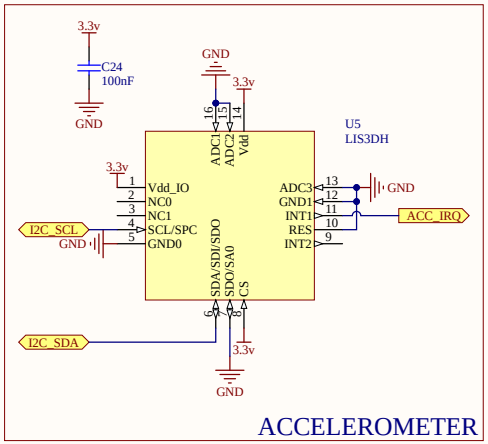

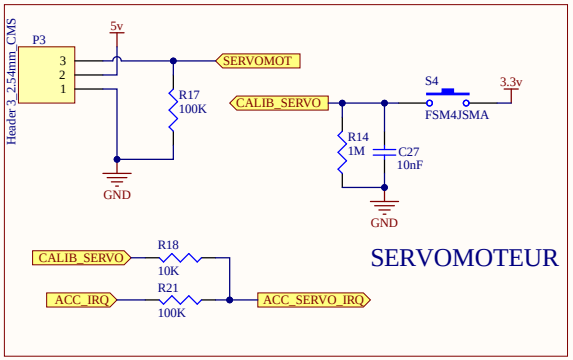

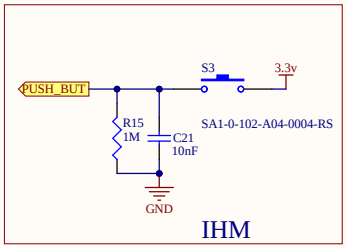

Title	BOITE_INUTILE_v1.8	CPU.SchDoc 1 / 1	
Size A3	Number DAMYSOS		Revision 11/01/2026
Date: 1/11/2026		Sheet of	
File: D:\en_cours\..\CPU.SchDoc		Drawn By:	

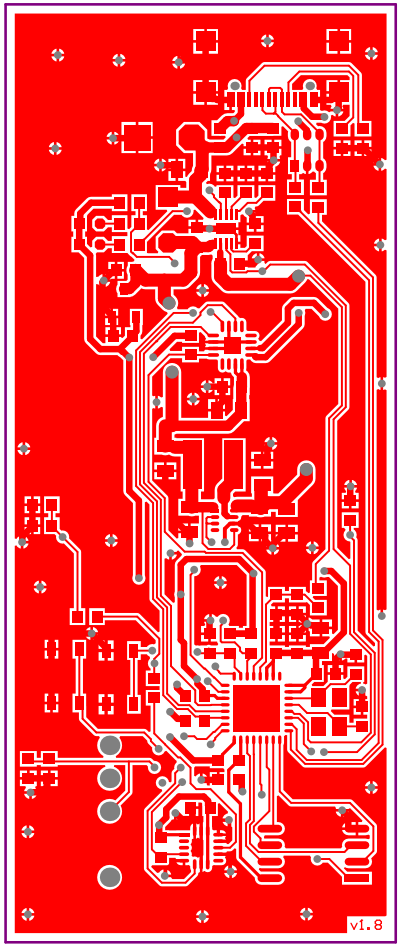
v1.8

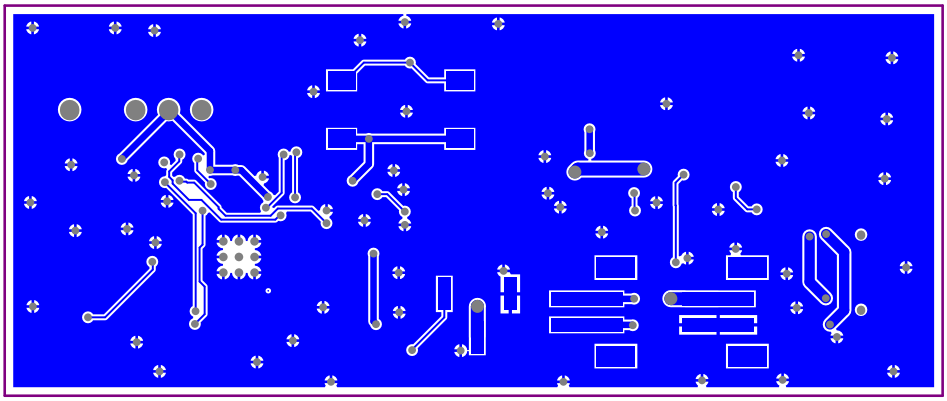

J1
D3
R4
R26
R20
R10
R9
C1
FB1
R15
D5
R25
D1 D2
R5
U1
R7
R16
R22
R1
R8
C2
D4
C4
C6
REG1
U3
la machine
by multiplié
C3
R19
C8
C7
L1
C25
C23
C26
C27
R14
C22
REG2
C20
R17
R6 C5
C11 C19
R3
C17
R13
R12
C10
R18
reset
R21
C13
C12
C18
boot
S1
S2
R11
C9
Y1
C21
R15
C16
C14
U4
U2
C24
R27
U5
72,20
30,00

BAT
+
P1
speaker
P2
servo
P3
S4
S3
button

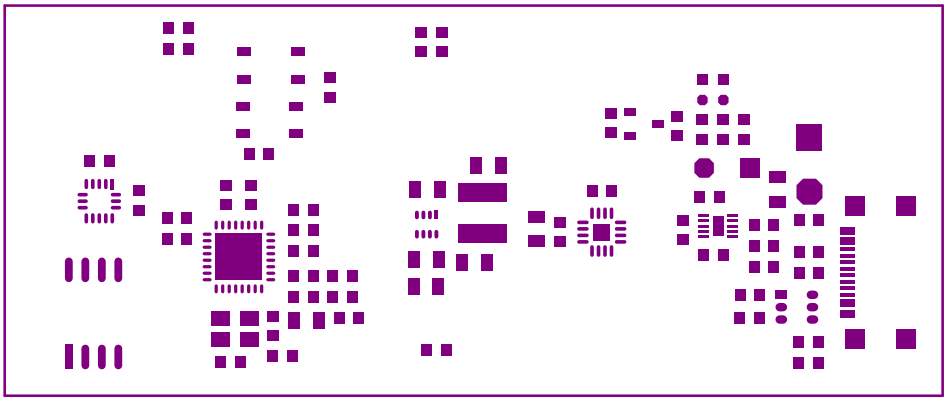

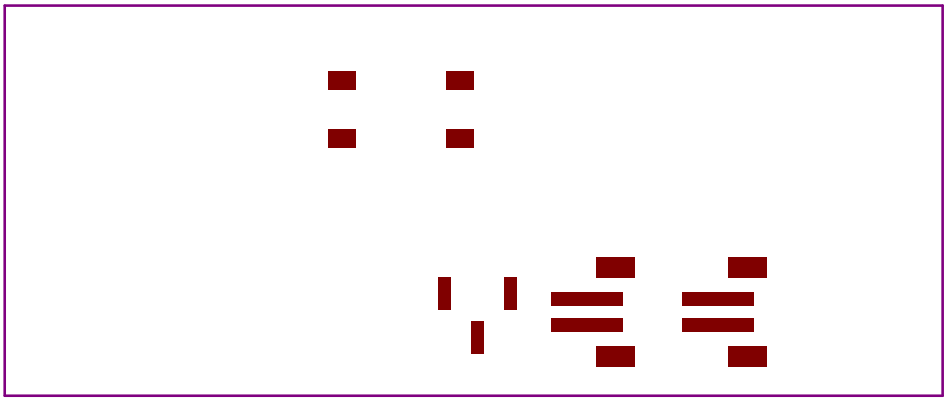

J1
D8
R31
C15
R2
D5
R25
R26
C1
R5
R7
R12
P1
R4
R1
D4
R20
R10
D3
R9
D1
U1
R8
C4
C6
C2
REG1
C3
P2
R19
U3
C8
C7
P3
L1
C23
C25
C20
C26
REG2
C22
R7
R14
C27
P4
R18
R6
C5
R3
C10
C11
C12
C13
C7
R17
U4
Y1
C9
S1
S2
R21
C3
R11
C14
R16
C24
U5
C22
C21
R15
P3

J1
D8
D5
R23
R22
C15
R1
R7
R12
C5
C1
D4
R20
R10
R9
D3
D1
C2
REG1
C3
R19
U3
P2
C7
C8
P1
U1
C4
C6
R8
P3
L1
C23
C25
C20
C26
C22
REG2
R7
R18
P4
R22
R14
R3
R5
C10
C11
C12
R2
C13
C7
R17
C9
Y1
U4
C3
R11
S1
S2
R21
C14
R16
C24
U5
C22
S3
C21
R15

J1
D3
D5
C1
D4
U1
C5
R7
R12
C4
R8
C6
R20
R10
R9
C2
REG1
C3
R19
U3
C7
C8
L1
C23
C22
REG2
C25
C20
C26
C24
R14
R18
S1
S2
R21
C13
R11
U4
Y1
C9
C10
R6
C5
R3
C11
R13
R12
C12
R15
R16
C14
R17
C21
U5
C22
S3

J1
D3
D5
R23
R22
C1
R1
R2
R5
R7
R12
D4
U1
C4
R8
C6
R20
R10
R9
D1
D2
C2
REG1
C3
R19
U3
P2
C7
C8
P3
C23
L1
C25
C20
C26
C22
REG2
C27
R14
P4
R18
R6
R3
C5
C10
C13
R17
C12
C11
C2
R21
S1
S2
C3
R11
U4
Y1
C9
R16
C14
C24
U5
C22
S3
R15
C21