Dæmi 1 Tvö hliðtengd viðnám hafa jafngildisviðnámið 10 kΩ.
Við vitum að annað er þrefalt stærra en hitt. Hvað eru viðnámin stór?

Lausn Het $3R_1 = R_2$ & $R_1 \parallel R_2 = R_1 \parallel 3R_1 = \dfrac{R_1 \cdot 3R_1}{R_1 + (3R_1)} = 10\,k\Omega$

eða $\dfrac{3R_1}{4} = 10\,k\Omega$ svo $\underline{\underline{R_1 = \frac{4}{3} 10\,k\Omega}}$

& $R_2 = 3R_1 = \underline{\underline{4 \cdot 10\,k\Omega}}$

Dæmi 2 $V_1 = 2V$ $V_2 = 3V$ $R_1 = 4\Omega$, $R_2 = 12\Omega$, $R_3 = 2\Omega$ $R_4 = 3\Omega$

Finna spennu í hnútpunkta a, b, c, d

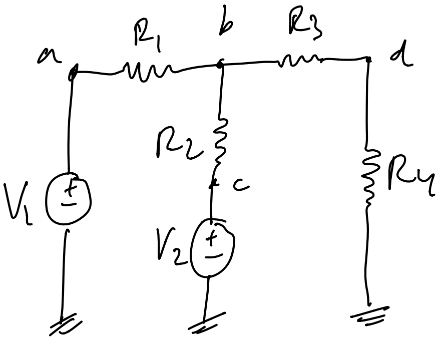

Lausn Set upp MNA fylki & leysi 4 Hnútpunktar + 2 VS = 6×6

$$\begin{array}{c|cccccc} & a & b & c & d & V_1 & V_2 \\ \hline a & G_1 & -G_1 & & & 1 & 0 \\ b & -G_1 & G_1+G_2+G_3 & -G_2 & -G_4 & 0 & 0 \\ c & & -G_2 & G_2 & & 0 & 1 \\ d & & -G_4 & & G_4 & 0 & 0 \\ V_1 & 1 & 0 & 0 & 0 & 0 & 0 \\ V_2 & 0 & 0 & 1 & 0 & 0 & 0 \end{array} \begin{bmatrix} v_a \\ v_b \\ v_c \\ v_d \\ j_{v1} \\ j_{v2} \end{bmatrix} = \begin{bmatrix} 0 \\ 0 \\ 0 \\ 0 \\ V_1 \\ V_2 \end{bmatrix}$$

$$\underline{\underline{\begin{bmatrix} v_a \\ v_b \\ v_c \\ v_d \\ j_{v1} \\ j_{v2} \end{bmatrix} = \begin{bmatrix} -2V \\ 1.41V \\ 3V \\ 0.84V \\ \\ \end{bmatrix}}}$$

Dæmi 3 Vil finna V ef $i_6 = 1A$ & $R_1 = 20\Omega,\ R_2 = 16\Omega,\ R_3 = 5\Omega,\ R_4 = 10\Omega$

$R_5 = 30\Omega,\ R_6 = 20\Omega$

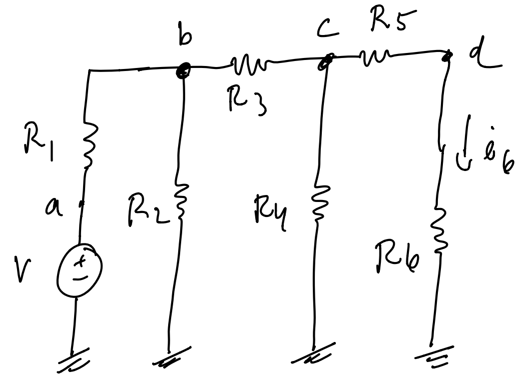

Lausn stilli upp MNA fylki

Hef 4 hnútpunkta & 1 óháða spennulind

$$i_6 = \frac{v_c - v_d}{R_5} = \frac{v_d - 0}{R_6} = 1\,A$$

$$\begin{array}{c|ccccc} & a & b & c & d & V \\ \hline a & G_1 & -G_1 & 0 & 0 & 1 \\ b & -G_1 & G_1+G_2+G_3 & -G_3 & 0 & 0 \\ c & 0 & -G_3 & G_3+G_4+G_5 & -G_5 & 0 \\ d & 0 & 0 & -G_5 & G_5+G_6 & 0 \\ V & 1 & 0 & 0 & 0 & 0 \end{array} \begin{bmatrix} v_a \\ v_b \\ v_c \\ v_d \\ j_V \end{bmatrix} = \begin{bmatrix} 0 \\ 0 \\ 0 \\ 0 \\ V \end{bmatrix} \text{ eða } \begin{bmatrix} v_a \\ v_b \\ v_c \\ v_d \\ j_V \end{bmatrix} = \begin{bmatrix} V & \text{V} \\ 4/15\,V & \text{V} \\ V/6 & \text{V} \\ V/15 & \text{V} \\ -11V/300\ A & \end{bmatrix}$$

nú er $v_d = \frac{V}{15} = i_6 \cdot R_6 = (1A)(20\Omega)$

svo $V = (15)(1A)(20\Omega) = \underline{\underline{300V}}$

athugum $i_6 = \frac{v_c - v_d}{R_5} = 1A$ $\underline{\underline{\text{ok!}}}$

Dæmi 4

Finna spennur í öllum hnútpunktum ef...
Leysið í Python eða sambærilegu!

$G_1 = G_3 = G_6 = G_7 = 1\,\mho$

$G_2 = G_5 = G_9 = G_{10} = 2\,\mho$

$G_4 = G_8 = 3\,\mho$

$V_1 = 3V,\ V_2 = -1V,\ V_3 = -2V,\ V_4 = 4V,\ V_5 = 2V$

Athugið að $G = R^{-1}$

Hint: Það þarf $5 + 5 = 10$ jöfnur/óþekktar!

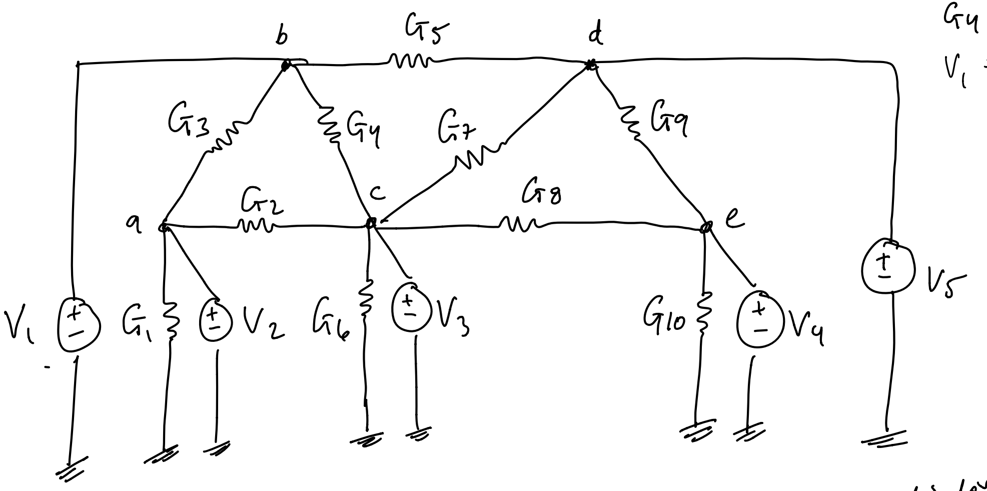

Lausn Höfum 5 hnútpunkta & 5 óháðar spennulindir ⇒ 10 óþekktar & 10 jöf

$$
\begin{array}{c|ccccc|ccccc}
 & a & b & c & d & e & V_1 & V_2 & V_3 & V_4 & V_5 \\
\hline
a & 1+2+3 & -3 & -2 & & & 0 & 1 & 0 & 0 & 0 \\
b & -3 & 3+4+5 & -4 & -5 & & 1 & 0 & 0 & 1 & 0 \\
c & -2 & -4 & 2+4+6+7+8 & -7 & -8 & 0 & 0 & 1 & 0 & 0 \\
d & & -5 & -7 & 5+7+9 & -9 & 0 & 0 & 0 & 0 & 1 \\
e & & & -8 & -9 & 8+9+10 & 0 & 0 & 0 & 1 & 0 \\
\hline
V_1 & 0 & 1 & 0 & 0 & 0 & & & & & \\
V_2 & 1 & 0 & 0 & 0 & 0 & & & & & \\
V_3 & 0 & 0 & 1 & 0 & 0 & & & & & \\
V_4 & 0 & 0 & 1 & 0 & 1 & & & & & \\
V_5 & 0 & 0 & 0 & 1 & 0 & & & & &
\end{array}
\begin{bmatrix} v_a \\ v_b \\ v_c \\ v_d \\ v_e \\ \hline j_{v1} \\ j_{v2} \\ j_{v3} \\ j_{v4} \\ j_{v5} \end{bmatrix}
=
\overset{\bar{b}}{\begin{bmatrix} 0 \\ 0 \\ 0 \\ 0 \\ 0 \\ \hline V_1 \\ V_2 \\ V_3 \\ V_4 \\ V_5 \end{bmatrix}}
$$

Sleppi að skrifa G_i & skrifa heldur bara i

$$
\begin{bmatrix} v_a \\ v_b \\ v_c \\ v_d \\ v_e \end{bmatrix} = \begin{bmatrix} -1V \\ 3V \\ -2V \\ 2V \\ -21 \end{bmatrix}
$$

Í heimadæminu eru óháðu lindirnar straumlindir $I_i = V_i$

þá er $\bar{b} = \begin{bmatrix} I_2 \\ I_1 \\ I_3 \\ I_5 \\ I_4 \end{bmatrix}$

$Ax = b$

$$
\begin{bmatrix} v_a \\ v_b \\ v_c \\ v_d \\ v_e \end{bmatrix} = \begin{bmatrix} 1791/1834\ V \\ 1936/917\ V \\ 2563/1834\ V \\ 4125/1834\ V \\ 475/262\ V \end{bmatrix} = \begin{bmatrix} 0.9766V \\ 2.1112V \\ 1.3975V \\ 2.2492V \\ 1.8130V \end{bmatrix}
$$

Dæmi 5 a) Notið hnútpunktagreiningu eða MNA til að finna spennu í punktum a, b, c & d. Finnið svo strauminn i_4 yfir viðnámið R_4. Hint: þið þurfið finna jöfnu fyrir fimm óþekktar breytur. Setjið svo upp í hneppi.

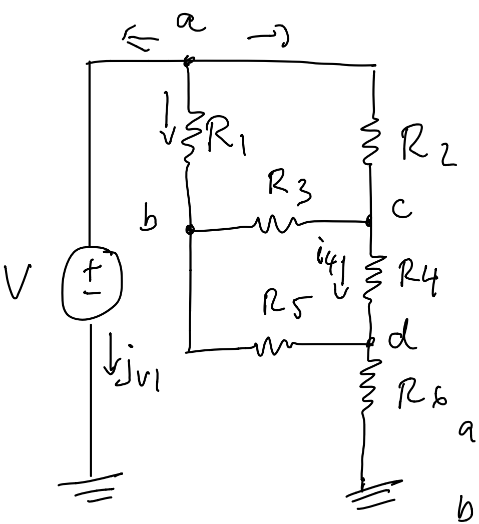

Lausn Stilli upp MNA fylki með $G_i = R_i^{-1}$

$V = G_1 = \dots = G_6 = 1$

$$\begin{array}{c|c} & \begin{array}{ccccc} a & b & c & d & V \end{array} \\ \begin{array}{c} a \\ b \\ c \\ d \\ V \end{array} & \left[\begin{array}{cccc|c} G_1+G_2 & -G_1 & -G_2 & & 1 \\ -G_1 & G_1+G_3+G_5 & -G_3 & -G_5 & 0 \\ -G_2 & -G_3 & G_2+G_3+G_4 & -G_4 & 0 \\ & -G_5 & -G_4 & G_4+G_5+G_6 & 0 \\ \hline 1 & 0 & 0 & 0 & 0 \end{array}\right] \end{array} \left[\begin{array}{c} v_a \\ v_b \\ v_c \\ v_d \\ \hline \boxed{j_V} \end{array}\right] = \left[\begin{array}{c} 0 \\ 0 \\ 0 \\ 0 \\ \hline V \end{array}\right]$$

$-j_V$

$$\begin{bmatrix} v_a \\ v_b \\ v_c \\ v_d \\ j_V \end{bmatrix} = \begin{bmatrix} 1\,V \\ 3/4\,V \\ 3/4\,V \\ 1/2\,V \\ -1/2\,A \end{bmatrix}$$

þá er $i_4 = \dfrac{v_c - v_d}{R_4} = \dfrac{3/4 - 1/2}{1} = \underline{\underline{\dfrac{1}{4}\,A}}$

$i_{a\perp} + i_{ab} + i_{ac} = 0$

$j_V + G_1(V_a - V_b) + G_2(V_a - V_c) = 0$

Ef $V = 1$ en $R_i = i\,\Omega$, hvað þá?

$$\begin{bmatrix} v_a \\ v_b \\ v_c \\ v_d \\ j_V \end{bmatrix} = \begin{bmatrix} 1\,V \\ 88/94\,V \\ 85/94\,V \\ 63/94\,V \\ -21/188\,V \end{bmatrix} \approx \begin{bmatrix} 1\,V \\ 0.9362\,V \\ 0.9043\,V \\ 0.6702\,V \\ -0.0585\,A \end{bmatrix}$$

$V_{ac} = V_a - V_c$

svo $\underline{\underline{i_4 = \dfrac{v_c - v_d}{R_4} = 88/94\,A}}$