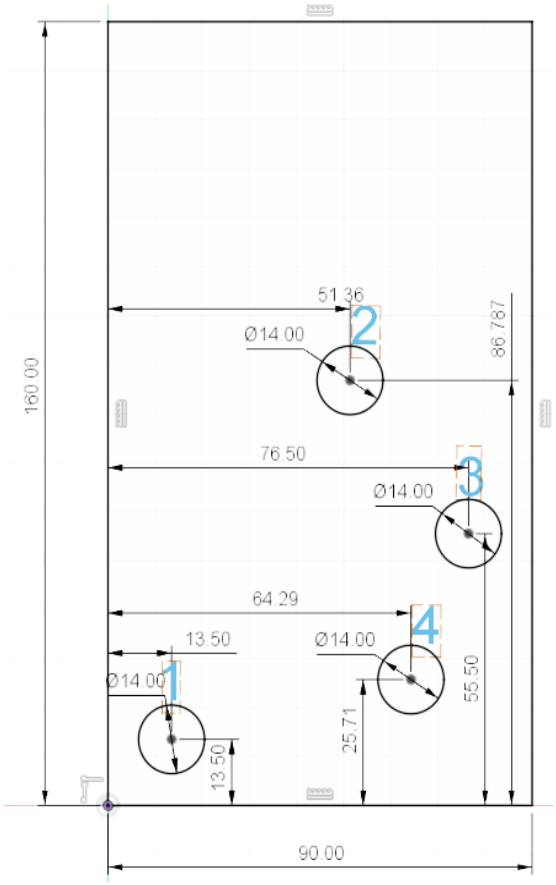
160.00
51.36
Ø14.00
2
86.787
76.50
Ø14.00
3
64.29
13.50
Ø14.00
4
Ø14.00
1
55.50
25.71
13.50
90.00

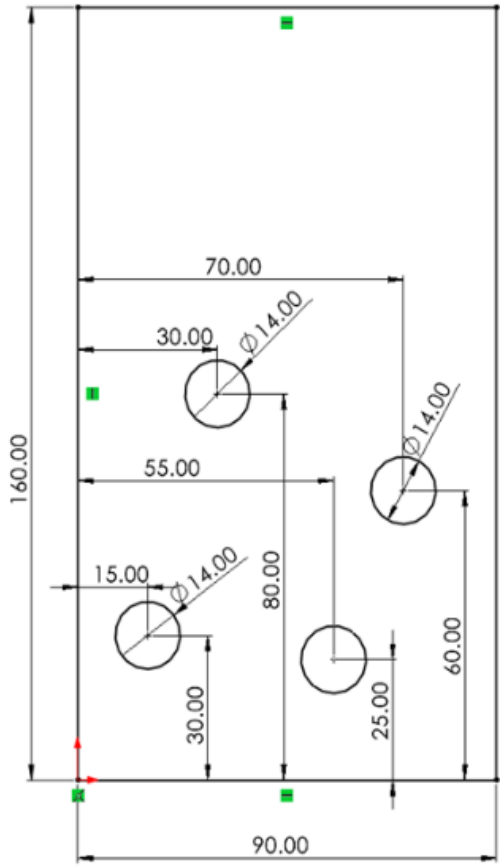
70.00
30.00
Ø14.00
Ø14.00
160.00
55.00
15.00
Ø14.00
80.00
60.00
30.00
25.00
90.00

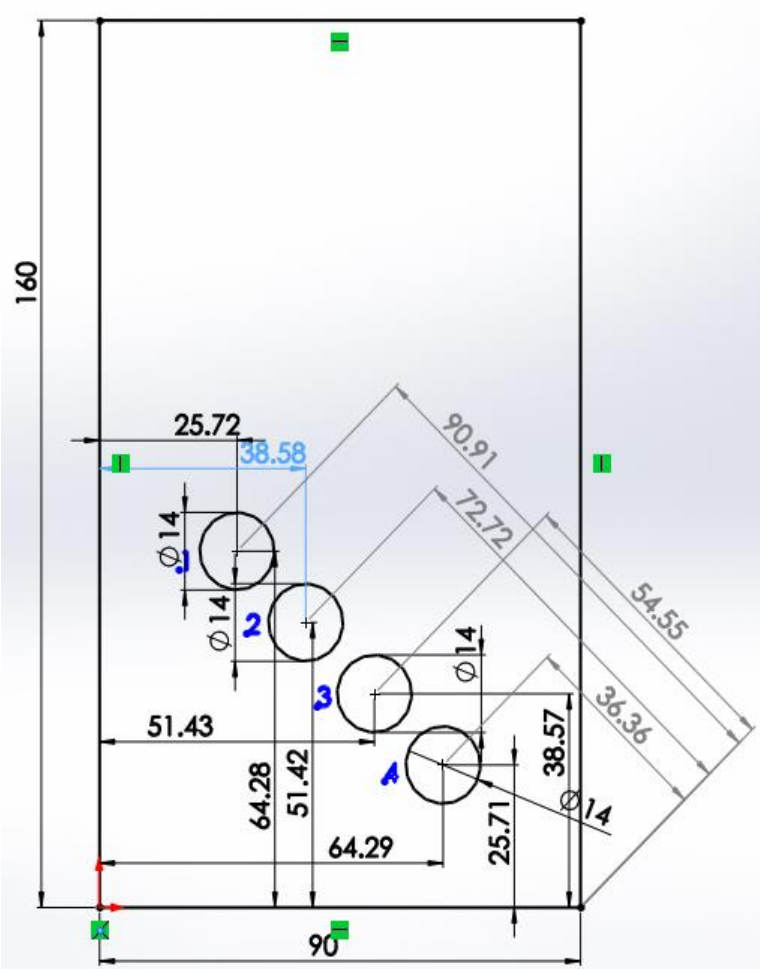
160
25.72
38.58
90.91
72.72
54.55
36.36
Ø14
1
2
3
4
51.43
64.28
51.42
64.29
38.57
25.71
90

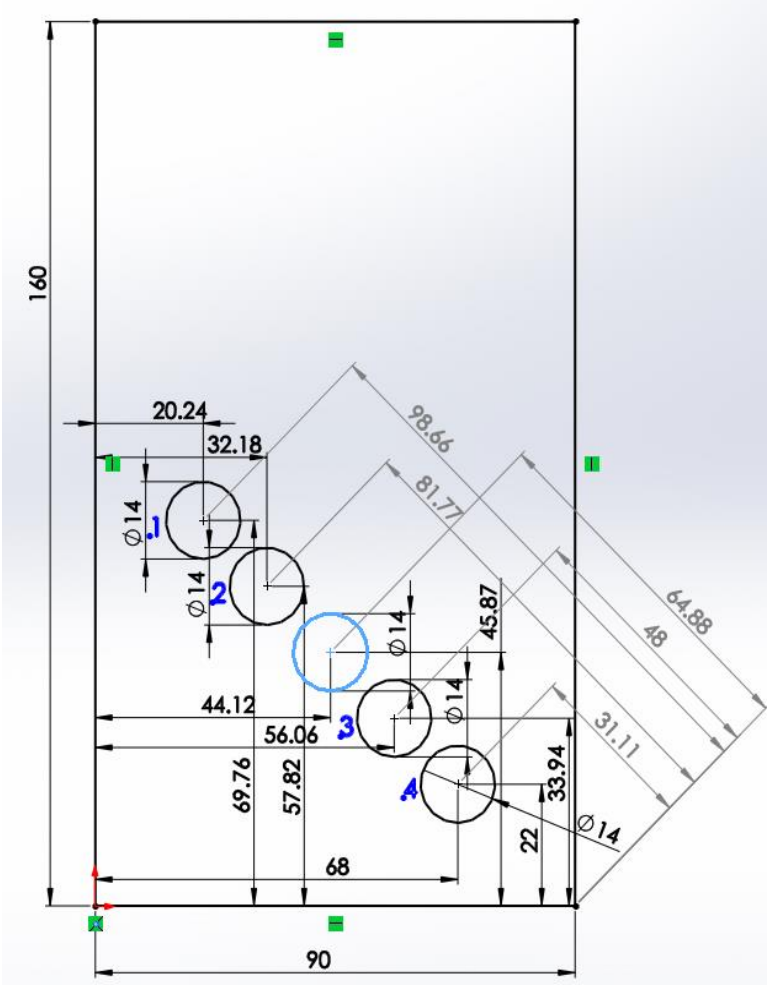
160
20.24
32.18
98.66
81.77
64.88
48
31.11
Ø14
1
2
3
4
44.12
56.06
69.76
57.82
45.87
33.94
22
68
90

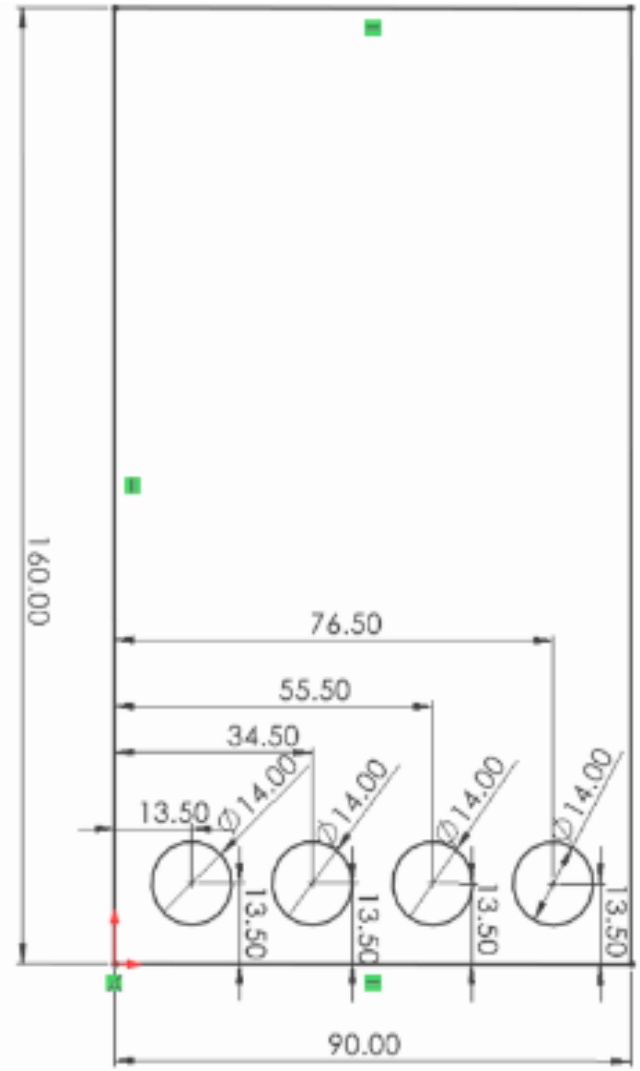
160.00
76.50
55.50
34.50
13.50
⌀14.00
⌀14.00
⌀14.00
⌀14.00
13.50
13.50
13.50
13.50
90.00

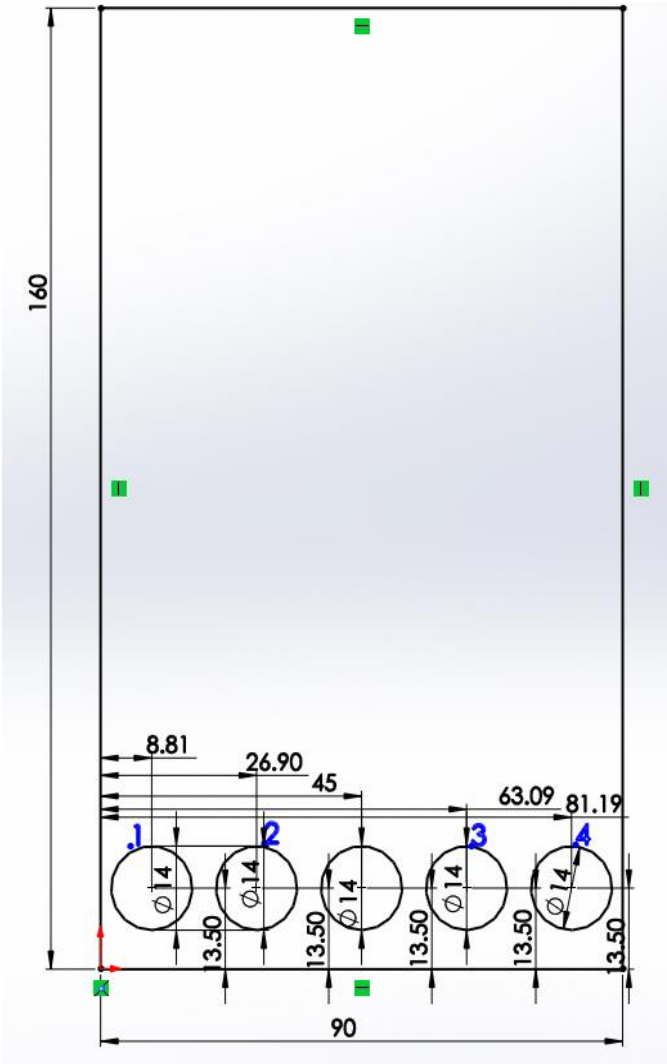
160
8.81
26.90
45
63.09
81.19
1
2
3
4
⌀14
⌀14
⌀14
⌀14
⌀14
13.50
13.50
13.50
13.50
13.50
90

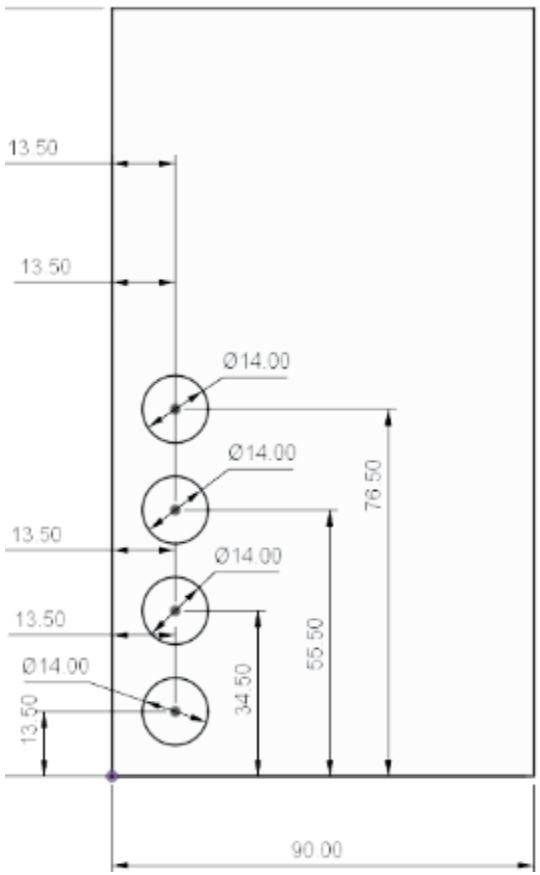
13.50
13.50
Ø14.00
Ø14.00
13.50
Ø14.00
13.50
Ø14.00
13.50
34.50
55.50
76.50
90.00

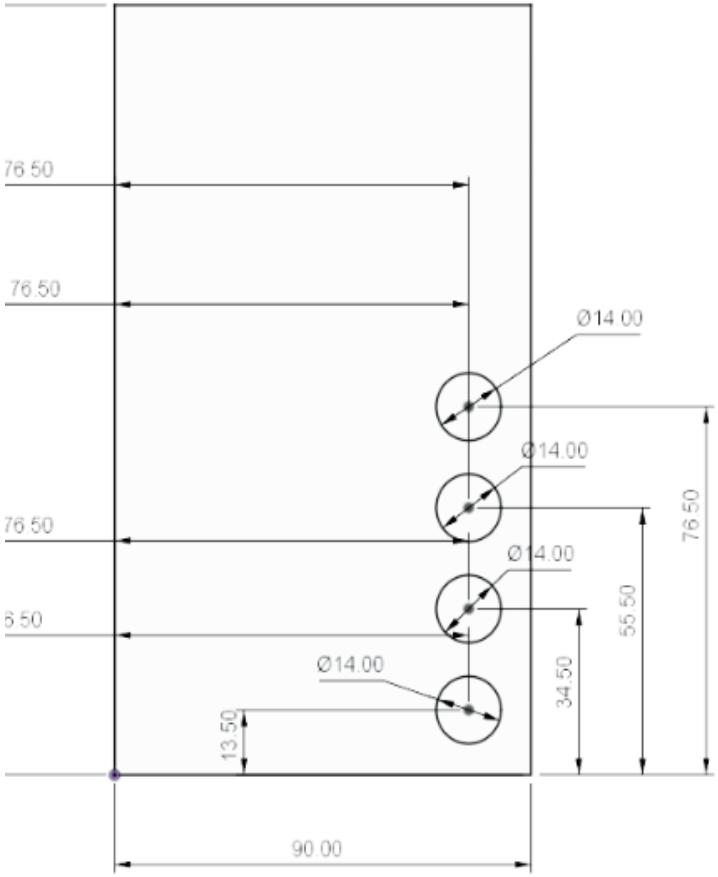
76.50
76.50
Ø14.00
Ø14.00
76.50
Ø14.00
6.50
Ø14.00
13.50
34.50
55.50
76.50
90.00

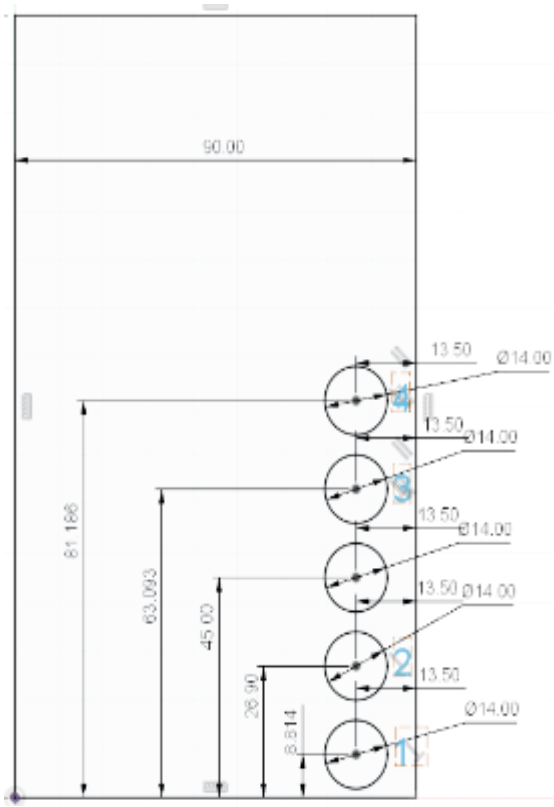
90.00
13.50
Ø14.00
4
13.50
Ø14.00
3
13.50
Ø14.00
13.50
Ø14.00
2
13.50
Ø14.00
1
81.186
63.093
45.00
26.90
8.814

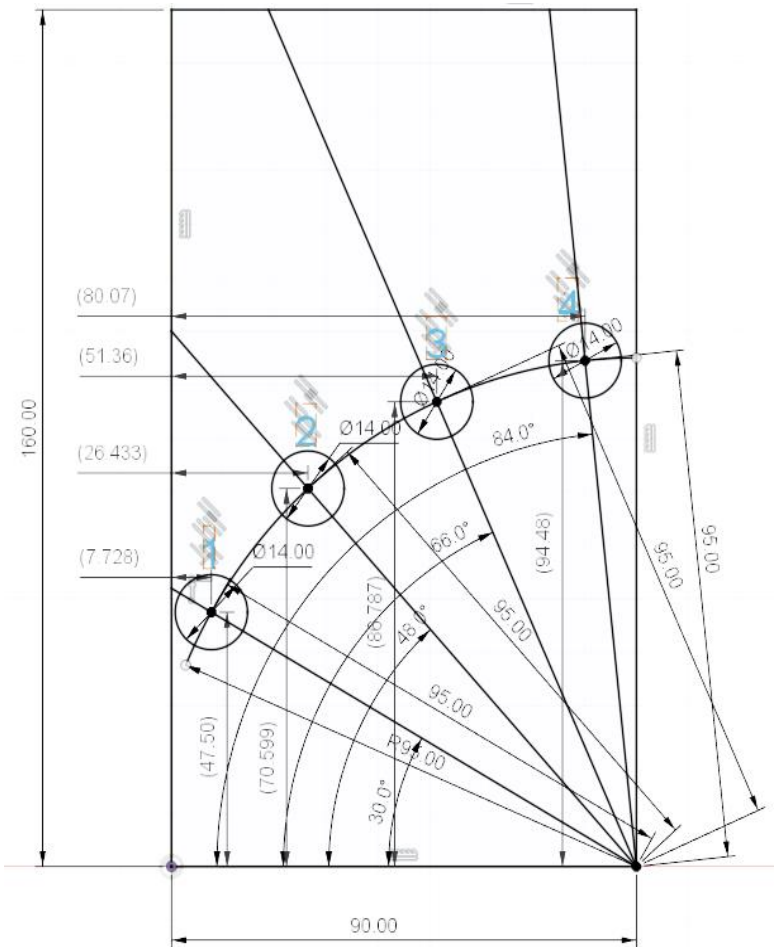
160.00
(80.07)
(51.36)
(26.433)
(7.728)
Ø14.00
Ø14.00
Ø14.00
Ø14.00
84.0°
66.0°
48.0°
30.0°
95.00
95.00
95.00
95.00
95.00
(94.48)
(86.787)
(70.599)
(47.50)
90.00

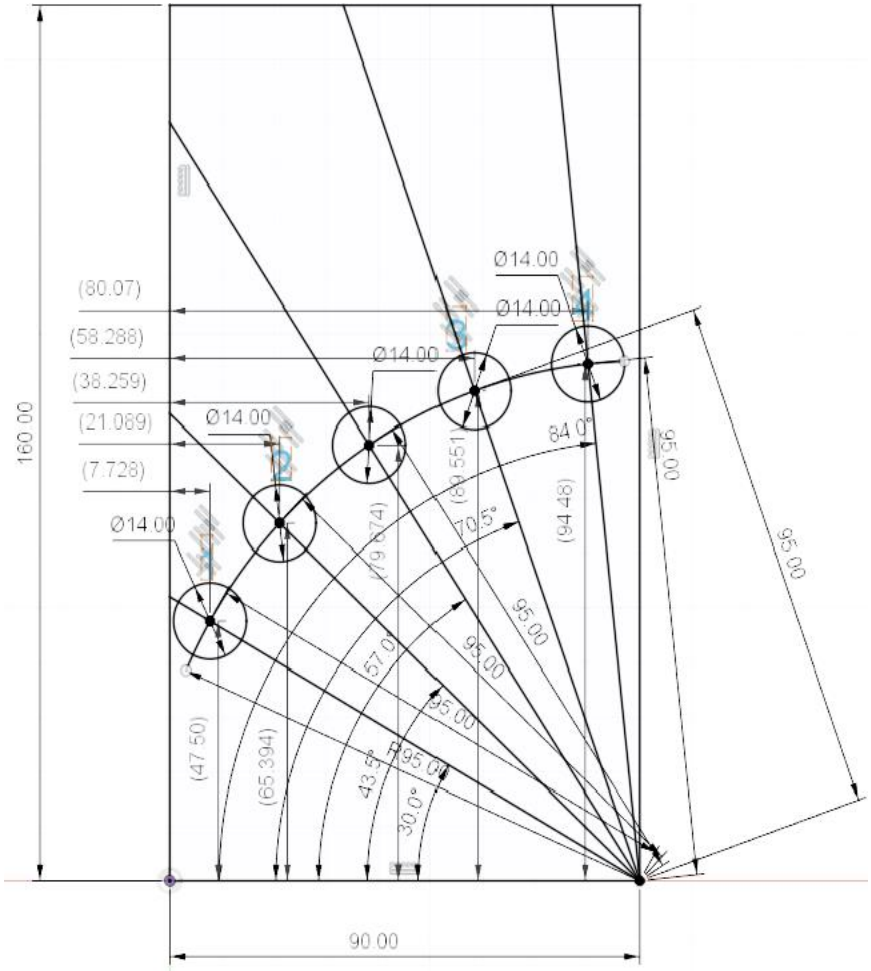
160.00
(80.07)
(58.288)
(38.259)
(21.089)
(7.728)
Ø14.00
Ø14.00
Ø14.00
Ø14.00
Ø14.00
84.0°
70.5°
57.0°
43.5°
30.0°
95.00
95.00
95.00
95.00
95.00
95.00
(94.48)
(80.551)
(79.074)
(65.394)
(47.50)
90.00

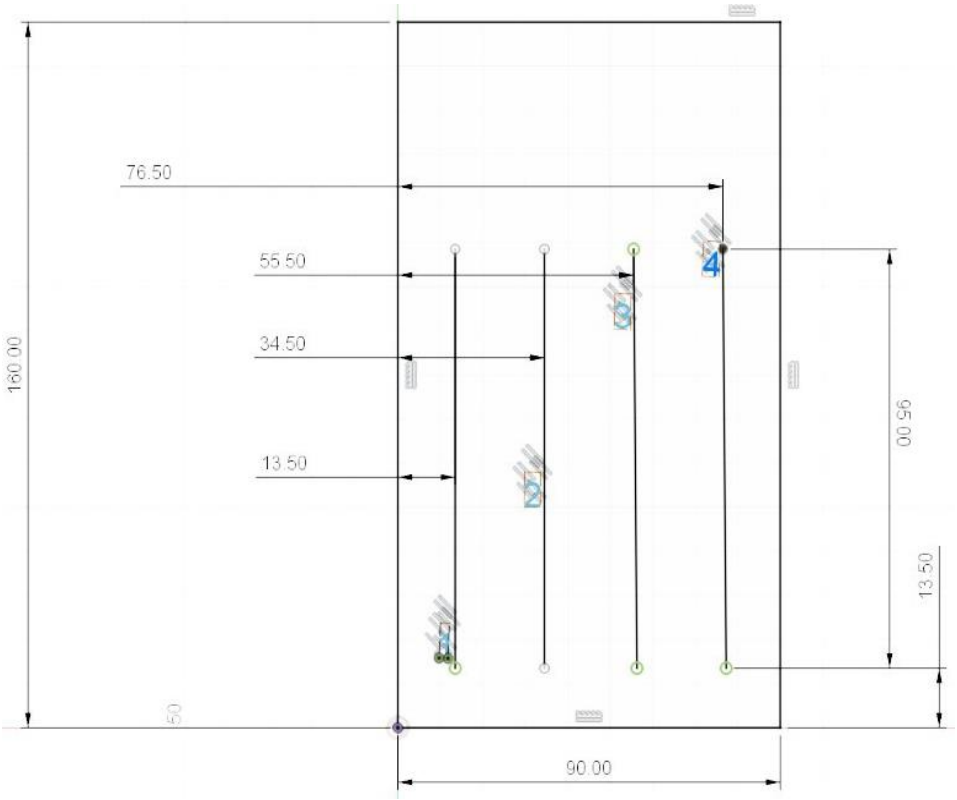
76.50
55.50
34.50
13.50
160.00
96.00
13.50
50
90.00

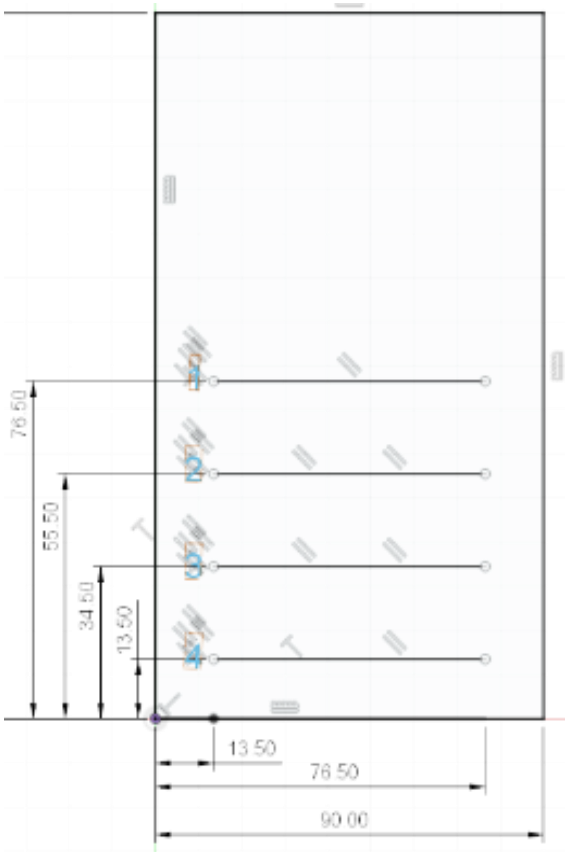
76.50
55.50
34.50
13.50
13.50
76.50
90.00

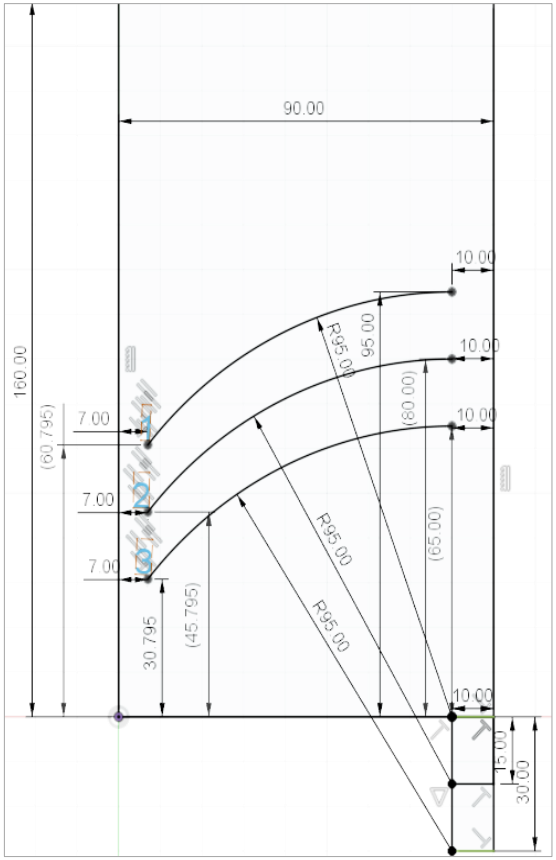
90.00
160.00
(60.795)
7.00
7.00
7.00
30.795
(45.795)
R95.00
R95.00
R95.00
95.00
(80.00)
(65.00)
10.00
10.00
10.00
10.00
15.00
30.00

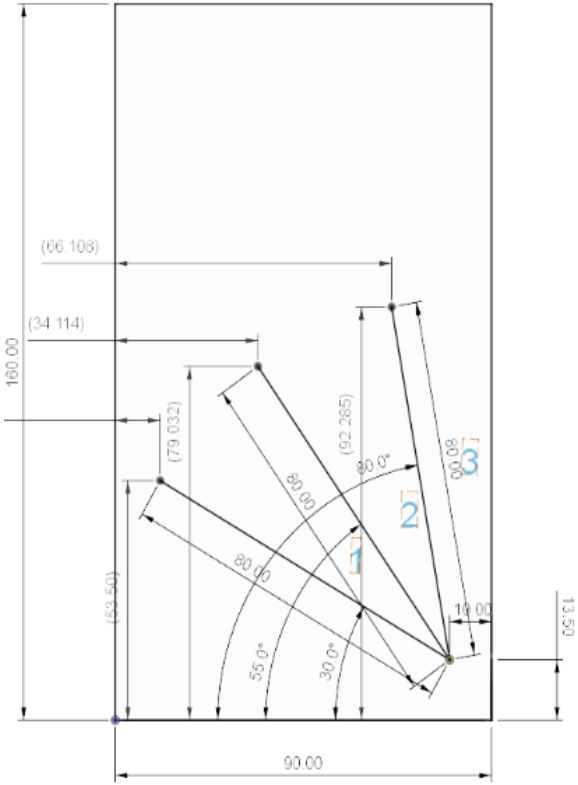
(66.108)
(34.114)
160.00
(79.032)
(92.265)
(53.50)
80.00
80.00
80.00
80.0°
55.0°
30.0°
1
2
3
10.00
13.50
90.00