ESP32-DevKitC

ESPRESSIF

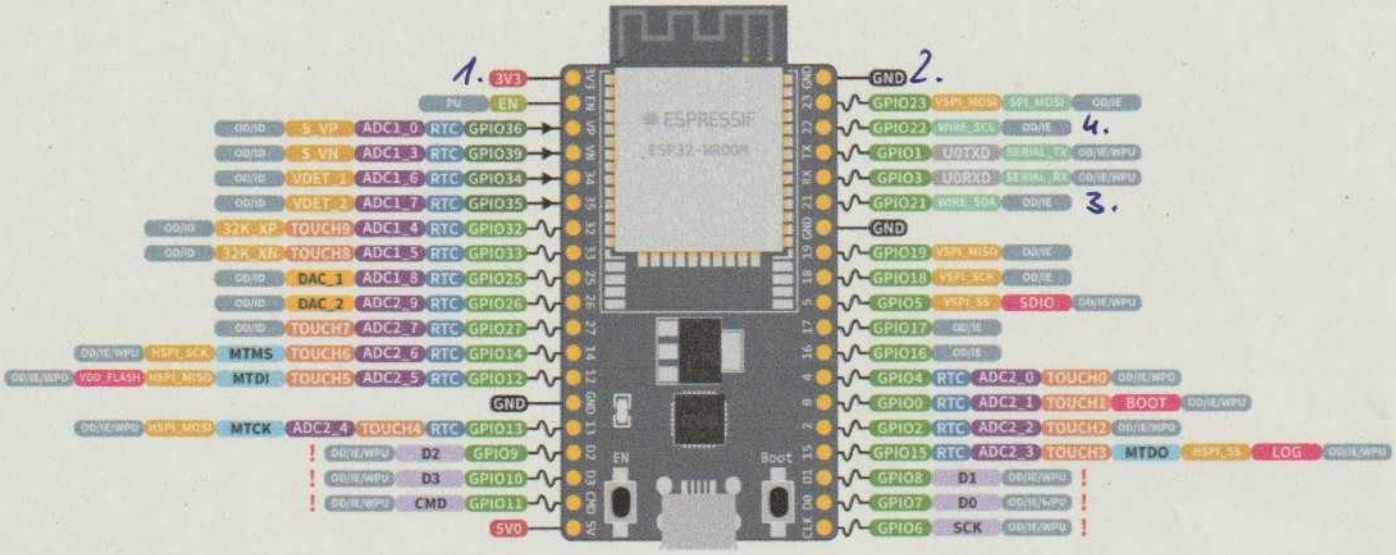

ESP32 Specs

32-bit Xtensa® dual-core @240MHz
Wi-Fi IEEE 802.11 b/g/n 2.4GHz
Bluetooth 4.2 BR/EDR and BLE
520 KB SRAM (16 KB for cache)
448 KB ROM
34 GPIOs, 4x SPI, 3x UART, 2x I2C,
2x I2S, RMT, LED PWM, 1 host SD/eMMC/SDIO,
1 slave SDIO/SPI, TWAI®, 12-bit ADC, Ethernet

- PWM Capable Pin
- GPIOX — GPIO Input Only
- GPIOX — GPIO Input and Output
- DAC_X — Digital-to-Analog Converter
- DEBUG — JTAG for Debugging
- FLASH — External Flash Memory (SPI)
- ADCX_CH — Analog-to-Digital Converter
- TOUCHX — Touch Sensor Input Channel
- OTHER — Other Related Functions
- SERIAL — Serial for Debug/Programming
- ARDUINO — Arduino Related Functions
- STRAP — Strapping Pin Functions

- RTC — RTC Power Domain (VDD3P3_RTC)
- GND — Ground
- PWD — Power Rails (3V3 and 5V)
- ! — Pin Shared with the Flash Memory. *Can't be used as regular GPIO*

GPIO STATE

- **WPU**: *Weak Pull-up (Internal)*
- **WPD**: *Weak Pull-down (Internal)*
- **PU**: *Pull-up (External)*
- **IE**: *Input Enable (After Reset)*
- **ID**: *Input Disabled (After Reset)*
- **OE**: *Output Enable (After Reset)*
- **OD**: *Output Disabled (After Reset)*

Mapping WPSE342 → ESP32

1.	3.3V	3.3V	Sensor Power
2.	GND	GND	Ground / common mass
3.	SDA	GPIO21	Serial data (sensor values)
4.	SCL	GPIO22	Serial clock (set frequency)

Connection to Arduino® – Pin Assignment

WPSE342	Arduino® Uno	Arduino® Mega
3.3 V	3.3 V	3.3 V
GND	GND	GND
SDA	SDA (A4)	20
SCL	SCL (A5)	21

Using the Air Quality Sensor Module
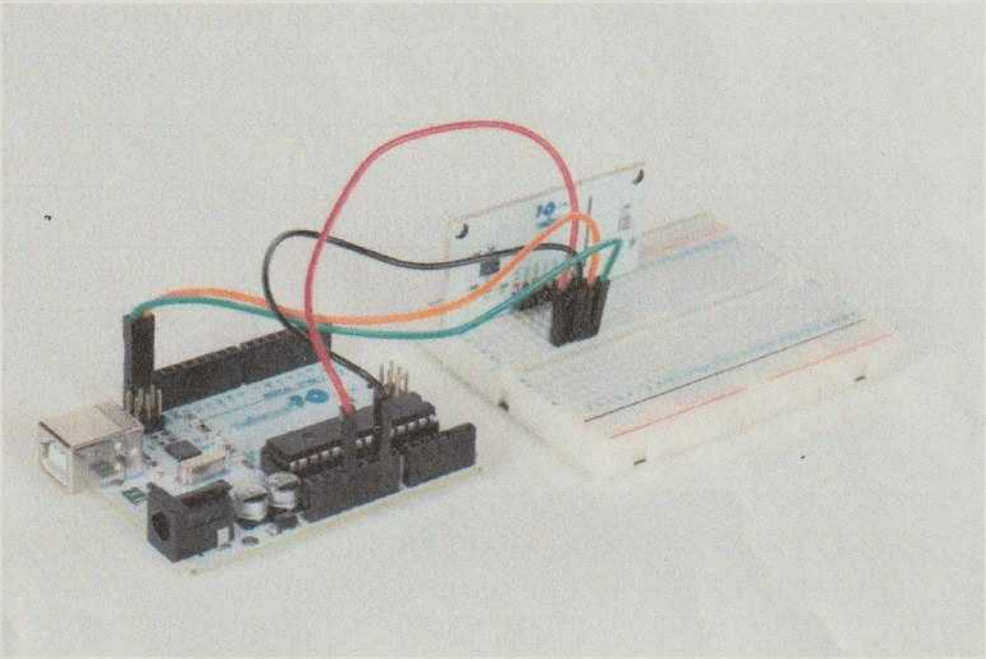
We are going to use I²C communication with the BME280 and CSS811 sensor module. For that, connect the air quality sensor to the Arduino® Uno **SDA** and **SCL** pins, as shown in the following schematic diagram below or check the pin assignment table above.