①

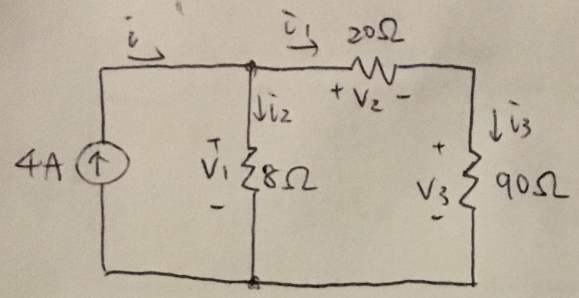

Find $V_1, V_2, V_3, i_1, i_2, i_3$

KCL: $-4 + i_1 + i_2 = 0$ — ①

KVL: $V_2 + V_3 - V_1 = 0$ — ②

Ohm's Law: $V_1 = 8 \cdot i_2$, $V_2 = 20 \cdot i_1$, $V_3 = 90 \cdot i_3$

$i_1 = i_3$

② $\Rightarrow 20 i_1 + 90 i_1 - 8 i_2 = 0 \Rightarrow 55 i_1 - 4 i_2 = 0$ — ③

solve ①, ③ $\Rightarrow i_1 = i_3 = \frac{16}{59}$ A, $i_2 = \frac{220}{59}$ A

$V_1 = \frac{1760}{59}$ V, $V_2 = \frac{320}{59}$ V, $V_3 = \frac{1440}{59}$ V

②

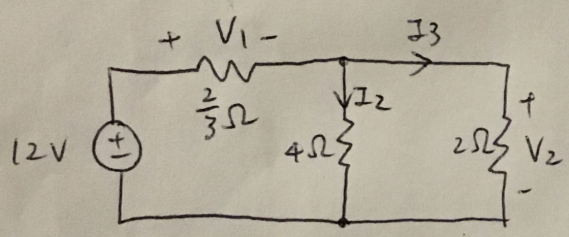

Find V_1, V_2, I_1, I_2, I_3

KVL: $-12 + V_1 + V_2 = 0$ — ①

KCL: $\frac{V_1}{2/3} - \frac{V_2}{4} - \frac{V_2}{2} = 0$

(and Ohm's law)

$\Rightarrow 2V_1 - V_2 = 0$ — ②

① + ② $\Rightarrow 3V_1 = 12 \Rightarrow V_1 = 4$ V

$V_2 = 2V_1 = 8$ V

$I_1 = 6$ A, $I_2 = 2$ A, $I_3 = 4$ A

③

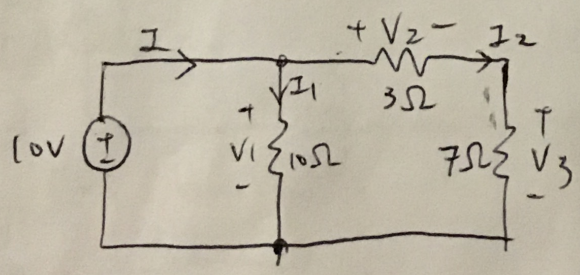

Find $V_1, V_2, V_3, I, I_1, I_2$

$V_1 = 10$ V

by voltage division

$V_3 = 10V \cdot \frac{7}{7+3} = 7$ V

$V_2 = 10V \cdot \frac{3}{7+3} = 3$ V

Ohm's law

$I_1 = 1$ A, $I_2 = 1$ A

KCL: $I - I_1 - I_2 = 0$

$\Rightarrow I = 2$ A

④

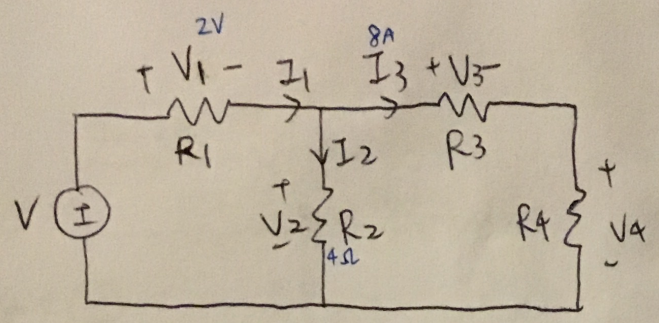

$R_2 = 4\Omega$, $V_1 = 2V$, $I_3 = 8A$, $P_2 = 16W$, $P_4 = 16W$

Find $V, V_2, V_3, V_4, I_1, I_2, R_1, R_3, R_4, P_1, P_3$

$P_2 = I_2^2 R_2 = \frac{V_2^2}{R_2}$

$\Rightarrow I_2 = \sqrt{16/4} = 2A$, $V_2 = \sqrt{16 \cdot 4} = 8V$

$P_4 = I_3^2 R_4 = \frac{V_4^2}{R_4} = I_3 V_4$

$\Rightarrow R_4 = \frac{16}{8^2} = 0.125\,\Omega$, $V_4 = \frac{16}{8} = 2V$

KVL: $V_3 + V_4 - V_2 = 0 \Rightarrow V_3 = 6V$

$R_3 = \frac{V_3}{I_3} = 0.75\Omega$

$P_3 = I_3 V_3 = 48\,W$

KCL: $I_1 - I_2 - I_3 = 0 \Rightarrow I_1 = 10A$

KVL: $-V + V_1 + V_2 = 0 \Rightarrow V = 10V$

$R_1 = \frac{V_1}{I_1} = 0.2\,\Omega$

$P_1 = V_1 I_1 = 20\,W$

⑤

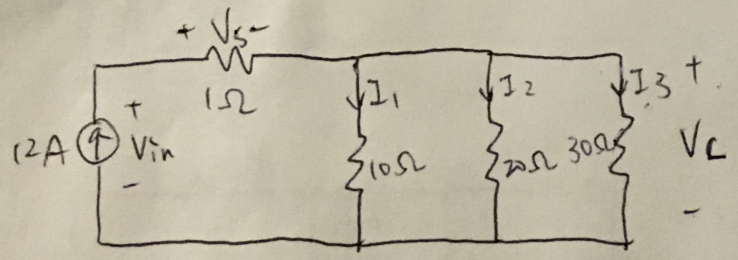

Find $V_{in}, V_s, V_L, I_1, I_2, I_3$

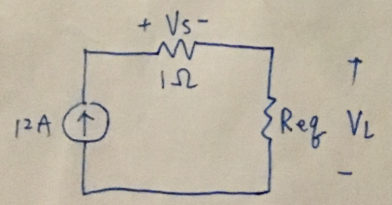

$R_{eq} = 10 \| 20 \| 30 = \frac{60}{11}\,\Omega$

$V_s = 12 \cdot 1 = 12V$

$V_L = 12 \cdot \frac{60}{11} = 65.45\,V$

$I_1 = \frac{V_L}{10} = 6.545\,A$

$I_2 = \frac{V_L}{20} = 3.273\,A$

$I_3 = \frac{V_L}{30} = 2.182\,A$

⑥

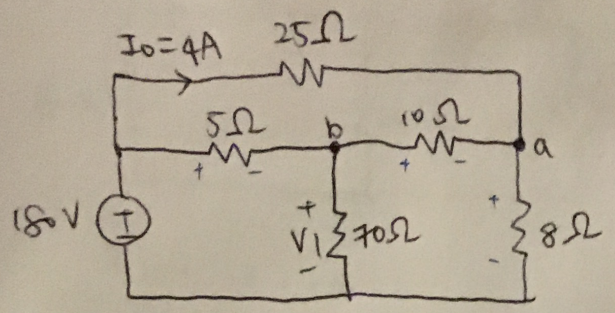

Find V_1

$V_{25} = 4 \cdot 25 = 100\ V$

KVL: $-180 + V_{25} + V_8 = 0 \Rightarrow V_8 = 80\ V$

KCL at a: $4 + i_{10} - i_8 = 0$

$\Rightarrow 4 + i_{10} - \frac{80}{8} = 0 \Rightarrow i_{10} = 6\ A$

$V_{10} = 6 \cdot 10 = 60\ V$

KVL: $60 + 80 - V_1 = 0 \Rightarrow V_1 = 140\ V$

⑦

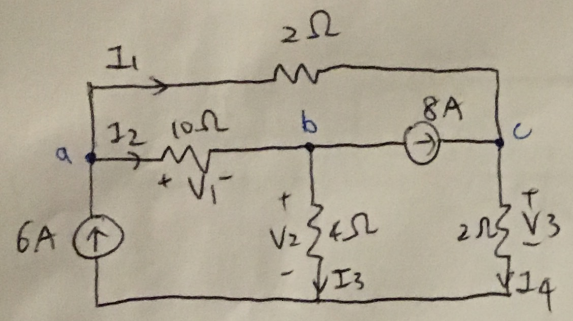

Find V_1, V_2, V_3

KCL at a: $6 - I_1 - I_2 = 0$ — ①

b: $I_2 - I_3 - 8 = 0$ — ②

c: $8 + I_1 - I_4 = 0$ — ③

KVL: $2I_1 + 2I_4 - 4I_3 - 10I_2 = 0$ — ④

$\Rightarrow I_1 = 2A$ $\quad V_1 = 40V$

$I_2 = 4A$ $\quad V_2 = -16V$

$I_3 = -4A$ $\quad V_3 = 20V$

$I_4 = 10A$

⑧

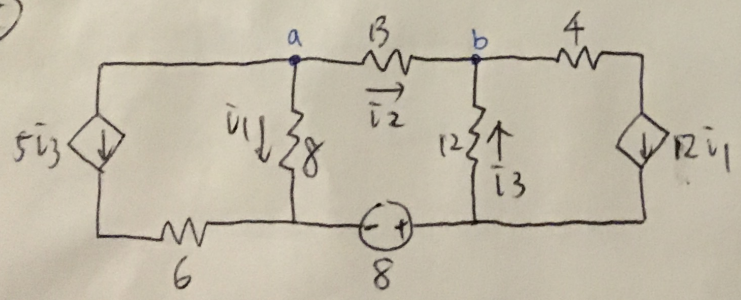

Find i_1, i_2, i_3

KCL at a: $i_1 + i_2 + 5i_3 = 0$ — ①

b: $12i_1 - i_2 - i_3 = 0$ — ②

KVL: $-8i_1 + 13i_2 - 12i_3 + 8 = 0$ — ③

$i_1 = -0.03A$

$i_2 = -0.53A$

$i_3 = 0.11A$

(9)

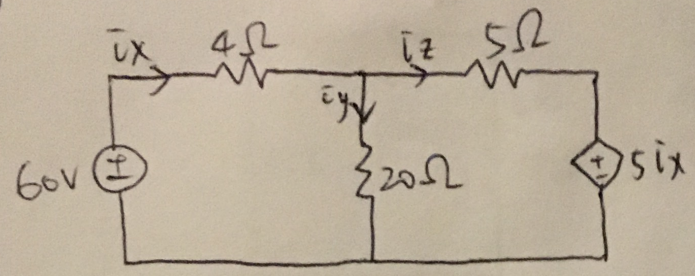

Find i_x, i_z

KCL: $i_x - i_y - i_z = 0$ — ①

KVL: $-60 + 4i_x + 20i_y = 0$ — ②

$5i_z + 5i_x - 20i_y = 0$ — ③

$i_x = 5\,A$

$i_y = 2\,A$

$i_z = 3\,A$

(10)

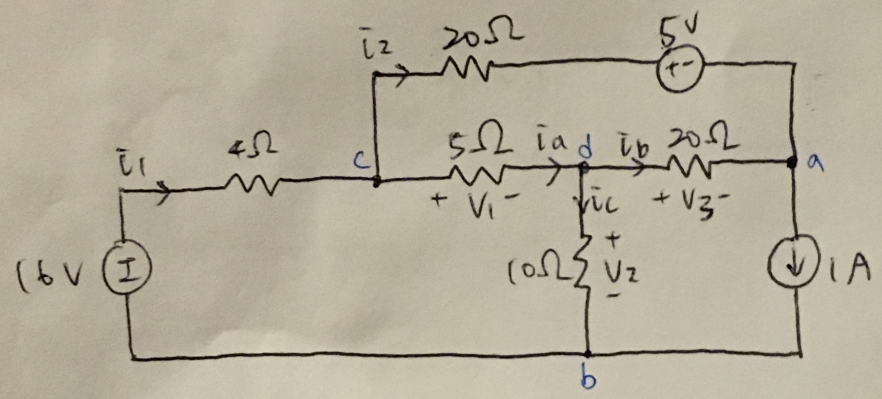

Find i_1, i_2, V_1, V_2, V_3

KCL at a: $i_2 + i_b - 1 = 0$

b: $1 + i_c - i_1 = 0$

c: $i_1 - i_2 - i_a = 0$

d: $i_a - i_b - i_c = 0$

KVL: $4i_1 + 5i_a + 10i_c - 16 = 0$

$20i_2 + 5 - 20i_b - 5i_a = 0$

$i_1 = 1.5\,A$

$i_2 = 0.5\,A$

$V_1 = 5\,V$

$V_2 = 5\,V$

$V_3 = 10\,V$