* Node Voltage Method

- Find essential nodes
- Set reference node (ground)
- Node voltage : rise from ground
- State KCL at essential nodes
- A voltage source between 2 essential nodes ⇒ supernode

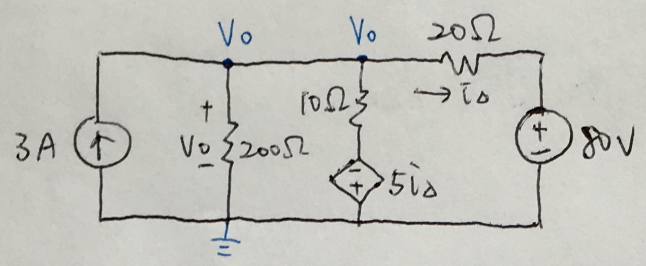

Find Vo and io

$$-3 + \frac{V_o}{200} + \frac{V_o - (-5i_o)}{10} + \frac{V_o - 80}{20} = 0$$

$$\Rightarrow 31V_o + 100\,i_o = 1400 \quad \text{—①}$$

$$i_o = \frac{V_o - 80}{20} \quad \text{—②}$$

①, ② ⇒ $V_o = 50V$, $i_o = -1.5A$ #

* Mesh Current Method

- Find meshes
- State KVL at each mesh
- Supermesh (Current source between 2 meshes)

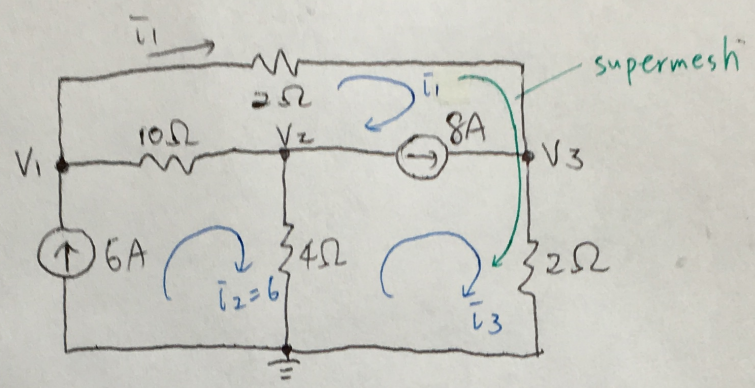

Find i_1, V_1, V_2, V_3

Supermesh:

$-i_1 + i_3 = 8$ — ①

$2i_1 + 2i_3 + 4(i_3 - 6) + 10(i_1 - 6) = 0$

$\Rightarrow 2i_1 + i_3 = 14$ — ②

①, ② $\Rightarrow i_1 = 2A$, $i_3 = 10\ A$

$V_2 = 4 \cdot (6 - i_3) = -16\ V$

$V_3 = 2i_3 = 20\ V$

$V_1 = V_2 - 10(i_1 - 6) = 24\ V$

①

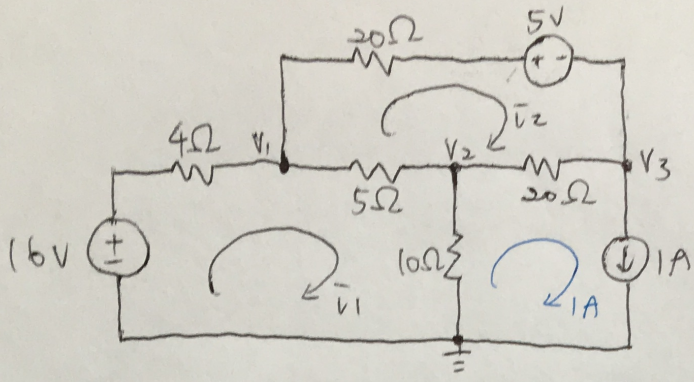

Find i_1, i_2, V_1, V_2, V_3

Mesh 1:

$-16+4i_1+5(i_1-i_2)+10(i_1-1)=0$

$\Rightarrow 19i_1-5i_2=26$ — ①

Mesh 2:

$20i_2+5+20(i_2-1)+5(i_2-i_1)=0$

$\Rightarrow 9i_2-i_1=3$ — ②

①, ② $\Rightarrow i_1=1.5A,\ i_2=0.5A$

$V_1=16-4i_1=10V$

$V_2=10(i_1-1)=5V$

$V_3=V_2-20(1-i_2)=-5V$

---

②

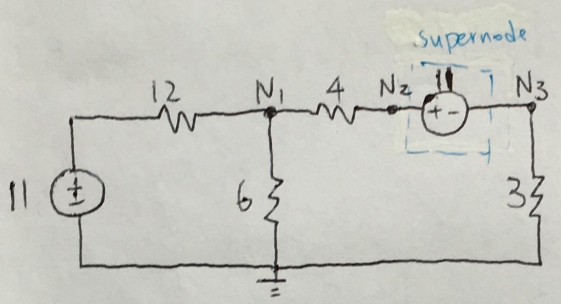

Find $V_{N_1}, V_{N_2}, V_{N_3}$

$N_1: \frac{V_{N_1}-11}{12}+\frac{V_{N_1}}{6}+\frac{V_{N_1}-V_{N_2}}{4}=0$

$\Rightarrow 6V_{N_1}-3V_{N_2}=11$ — ①

Supernode: $\frac{V_{N_2}-V_{N_1}}{4}+\frac{V_{N_3}}{3}=0$

$\Rightarrow -3V_{N_1}+3V_{N_2}+4V_{N_3}=0$

$V_{N_2}-V_{N_3}=11$ — ③

①, ②, ③ $\Rightarrow V_{N_1}=\frac{19}{3}V,\ V_{N_2}=9V,\ V_{N_3}=-2V$

---

③

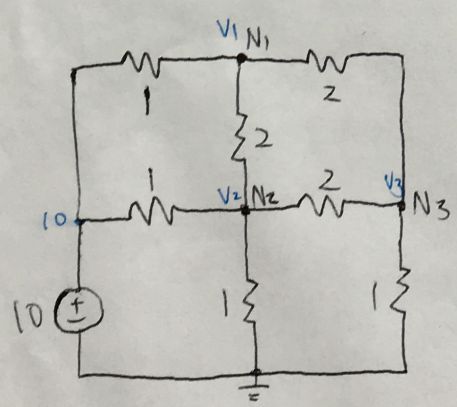

Find $V_{N_1}, V_{N_2}, V_{N_3}$

$N_1: \frac{V_1-10}{1}+\frac{V_1-V_2}{2}+\frac{V_1-V_3}{2}=0$

$\Rightarrow 4V_1-V_2-V_3=20$ — ①

$N_2: \frac{V_2-10}{1}+\frac{V_2-V_1}{2}+\frac{V_2-V_3}{2}+\frac{V_2}{1}=0$

$\Rightarrow -V_1+6V_2-V_3=20$ — ②

$N_3: \frac{V_3-V_1}{2}+\frac{V_3-V_2}{2}+\frac{V_3}{1}=0$

$\Rightarrow -V_1-V_2+4V_3=0$ — ③

①, ②, ③ $\Rightarrow V_1=7V,\ V_2=5V,\ V_3=3V$

④

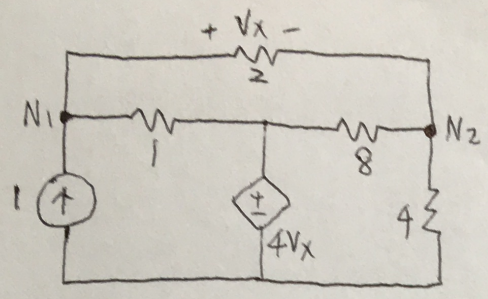

Find V_{N1}, V_{N2}

$N_1: -1 + \frac{V_{N1}-V_{N2}}{2} + \frac{V_{N1}-4V_x}{1} = 0$

$\Rightarrow 3V_{N1} - V_{N2} - 8V_x = 2$ — ①

$N_2: \frac{V_{N2}}{4} + \frac{V_{N2}-4V_x}{8} + \frac{V_{N2}-V_{N1}}{2} = 0$

$\Rightarrow -4V_{N1} + 7V_{N2} - 4V_x = 0$ — ②

$V_{N1} - V_{N2} = V_x$ — ③

①, ②, ③ $\Rightarrow V_{N1} = 22V$, $V_{N2} = 16V$

⑤

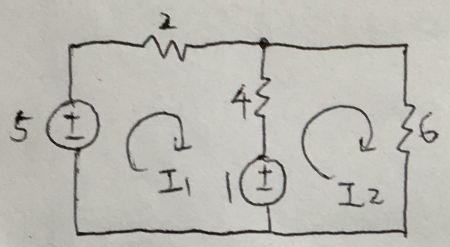

Find I_1, I_2

Mesh1: $-5 + 2I_1 + 4(I_1 - I_2) + 1 = 0$

$\Rightarrow 3I_1 - 2I_2 = 2$ — ①

Mesh2: $-1 + 4(I_2 - I_1) + 6I_2 = 0$

$\Rightarrow -4I_1 + 10I_2 = 1$ — ②

①, ② $\Rightarrow I_1 = 1A$, $I_2 = 0.5A$

⑥

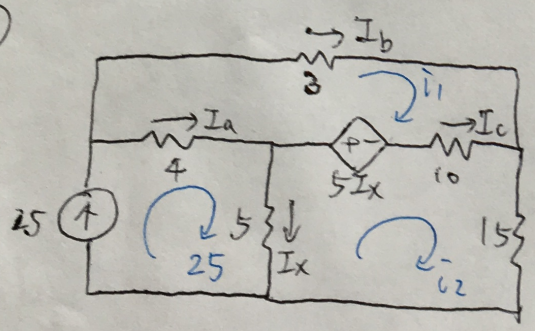

Find I_a, I_b, I_c

Mesh 1: $3i_1 + 10(i_1 - i_2) - 5I_x + 4(i_1 - 25) = 0$

$\Rightarrow 17i_1 - 10i_2 - 5I_x = 100$ — ①

Mesh 2: $5(i_2 - 25) + 5I_x + 10(i_2 - i_1) + 15i_2 = 0$

$\Rightarrow -2i_1 + 6i_2 + I_x = 25$ — ②

$I_x = 25 - i_2$ — ③

①, ②, ③ $\Rightarrow i_1 = 15$, $i_2 = 6$

$I_a = 25 - i_1 = 10$

$I_b = i_1 = 15$

$I_c = i_2 - i_1 = -9$