PLAZA

RULE BOOK

برنامج هندسة الذكاء الاصطناعي
Artificial Intelligence Engineering Program

برنامج هندسة الميكاترونكس
Mechatronics Engineering Program

Robot Construction and Development:

1. Team members are required to independently design and assemble both the robot's structure and electronic circuits.
2. The use of commercial robotic kits such as Lego, Tetrix, Vex, etc., is strictly prohibited.
3. Teams may fabricate the robot's structure using various manufacturing techniques, including laser cutting, 3D printing, turning, casting, and more.
4. Any raw materials—such as wood, aluminum, iron, plastic, rubber, silicone, etc.—are permitted, provided they adhere to all **robot specifications**.
5. Purchasing a fully assembled robot or a pre-built structure is not allowed.
6. **Permitted Pre-Manufactured Components**

Teams are only allowed to purchase the following pre-manufactured components:

- Wheels
- Microcontroller *(Arduino UNO, ESP32 only)*
- Motors
- Remotely Controlling Device
- Motor Driver
- Gear Box
- Sensors

- Batteries
- Robot Arm
- **Or any components of the same category**

⚠ Any pre-manufactured components not listed above are strictly prohibited.

Note: All additional circuits and components must be designed and assembled manually by the team, ensuring full compliance with all robot development rules.

PCB & Electronics Rules:

PCB Design and Manufacturing:

1. Teams must design and manufacture all electronic circuits themselves.
2. Pre-made circuits are not allowed, except for microcontrollers (*Arduino UNO, ESP32 only*).
3. All PCBs must be custom designed for the competition by the team.

Wiring & Connections:

4. All internal wiring must be safe and properly insulated to prevent short circuits.
5. All wires must be secured to prevent interference with the robot's movement or potential damage during operation.

Power & Energy:

6. The maximum allowed power source is *24V DC*.
7. AC power sources are strictly prohibited inside the robot.

8. Batteries must be rechargeable, preferably *Li-Ion or Li-Po*, and equipped with proper protection systems.

Inspection & Compliance:

9. Teams must provide circuit schematics upon request during the technical inspection before the competition starts.
10. Random tests may be conducted to ensure teams comply with the stated rules.

Power Rules:

Allowed Power Sources:

1. Only **batteries** are allowed as the primary power source for the robot; external power sources such as direct electricity or solar energy are strictly prohibited during the competition.
2. Batteries must be **safe for use** and suitable for the robot's electronic components. Preferred types include **Li-Ion, Li-Po, NiMH,** or **Lead-Acid**, provided they meet safe voltage and current requirements.
3. **Industrial or non-rechargeable batteries**, such as *Alkaline or Zinc-Carbon*, are not allowed except for small devices like controllers.
4. The total battery voltage within the robot **must comply with the competition's voltage limits** and must not exceed **24V**.

Power Connection Requirements:

5. All electrical connections inside the robot must be **properly insulated** to prevent **short circuits** or **electrical hazards**.
6. All power connections must be **securely fixed** inside the robot to prevent disconnections during movement.
7. Exposed wires or loose connections that may cause **electrical shorts** or **pose safety risks** to the team or surroundings are strictly prohibited.

Power Safety Measures:

8. Batteries must have **overcharge and over-discharge protection** to prevent damage or explosion risks.
9. Charging the batteries while the robot is operating in the competition is not allowed.
10. Each robot must have an **Emergency Power Off Switch** that can immediately cut power to the motors and controllers in case of an emergency.
11. A **Power Management System (PMS)** is recommended to regulate power distribution among components and prevent sudden performance drops.
12. Batteries must be inspected before the competition to ensure **no leakage or swelling**, and damaged batteries are strictly prohibited.

Inspection & Approval:

13. Teams may be required to **present battery specifications and wiring diagrams** to the judging panel before the competition.

14. All power sources in the robot will be inspected before the event, and any violations may result in **disqualification**.

🤖 Robot Specifications:

📏 Dimensions:

- **Base**: Maximum **30 × 40 cm.**
- **Height**: Maximum **40 cm**.
- **Arm & Grip Length**: Maximum **50 cm** *(not counted in base dimensions)*.
- **Weight**: Maximum **6 kg.**

⚠️ *Robots exceeding these limits will not be allowed to compete unless modified to meet the specifications.*

🔧 Robot Design & Fair Play Rules:

1️⃣ There are no restrictions on the number of motors or wheels used in the robot.
2️⃣ **Sensors:** Teams are allowed to use any type of sensors based on their needs.
3️⃣ **Control Device:** The robot must include a device for remote control, with no restrictions on the type of device used.
4️⃣ It is strictly prohibited to use any devices or components that may interfere with or negatively affect the performance of an opponent's robot.

5 Any components or materials that could damage the competition track are not allowed. Additionally, intentional damage to an opponent's robot is strictly forbidden.

6 Teams are allowed to carry spare parts for repairs and replacements during the competition.

7 Teams have full freedom to design and build their robots as they see fit, provided they adhere to the specified competition rules and are capable of successfully navigating the track. The competition encourages **innovation, experimentation, and continuous improvement** through an evolutionary design approach.

8 The robot arm must be designed to support a load of up to **350 grams**.

Note: The load will be made of **Beech Wood**.

PLAZA

🏆 Best Mechanical Design Criteria & Rules:

1️⃣ **Design Software:** Teams are allowed to use **SolidWorks** for designing their robot.

2️⃣ **Originality of the Design:**

- Downloading **pre-made full 3D models** from the internet is strictly prohibited, except for essential **electronic components** such as **Arduino boards, switches, and motors**.

3️⃣ **Team Contribution:**

- The entire **mechanical structure** of the robot must be **designed exclusively** by the team members. **No external pre-made structures** are allowed.

4️⃣ **Implementation Accuracy:**

- The **final physical robot** must closely match its **designed 3D model**, ensuring that the implemented version follows the original design specifications.

📊 Scoring Criteria:

- Teams will be evaluated based on the following factors:
- **(15%) Body Balance** – Ensuring the robot is stable and well-balanced.
- **(15%) Material Selection** – Justification for material choices based on functionality and durability.

- **(10%) Wheels** – Suitability of the wheels, including friction coefficient and traction.
- **(20%) Dimensions & Weight** – Compliance with the allowed size and weight limits.
- **(10%) Motor** – Type, specifications, and efficiency of the selected motor.
- **(10%) Form & Coordination** – Overall design aesthetics, component arrangement, and structural coherence.
- **(10%) Fabrication** – Quality of assembly and the extent of the team's involvement in building the robot.
- **(10%) Simulation** – Performing stress analysis to validate the robot's structural integrity.
- ⚠ **Penalty & Bonus Points:**
- If any parts or assemblies are directly downloaded from online sources, **points will be deducted**.
- If all parts are fully designed by the team, an **additional 5% bonus** will be awarded.

Judging Criteria & Match Rules:

- Competing teams will be **randomly divided into groups** through a drawing process.
- **Group Stage Scoring:**
  - Points for each team will be calculated as the **sum of the total points** earned in each match.
  - Each match has a maximum score of **100 points**.
- **Advancement to Knockout Stage:**
  - The **top 16 teams** across all groups will qualify for the **knockout stage**.
  - In the knockout stage, qualification to the next round is determined **solely by match points**.
- **Match Duration & Winning Conditions:**
  - Each race will last **10 minutes**.
  - The team with the highest score at the end of the time limit wins the match.
  - In case of a **tie in point**, the winner will be:
    1. The team that **reaches the finish line first**.
    2. If neither team finishes, the one **closest to the finish line** will be declared the winner.

- **Tie-Breakers in Group Stage:**
  - If teams are tied in total points, the team with **more matches wins** in the group stage will qualify.
  - If still tied, a **playoff match** will be held to determine qualification.
- **Attendance & Compliance:**
  - Each team **must arrive before their scheduled match** with enough time for robot inspection, as determined by the committee.
  - Any team **exceeding the allowed delay time** will be **disqualified**, and the **full match points** will be awarded to the opposing team.
  - If a robot **fails to meet the competition's design standards and regulations**, the team will be **excluded from the competition**.

1. General Evaluation System:

- Teams' performance is assessed based on **efficiency, speed, and accuracy** in completing the required tasks at each stage of the competition.
- Points are awarded according to predefined criteria for each challenge, and scores are updated after every stage.

- In the event of a tie in the final score, the **task completion time** will be used as a tiebreaker. If the tie persists, additional criteria such as **the number of mistakes** or **robot performance in difficult challenges** will be considered.

2. Scoring System:

- Points are awarded based on the robot's ability to successfully complete the required tasks in each competition stage, with each task having a predetermined point weight.
  (Refer to the first section of the rulebook for detailed scoring values.)
- Deductions will be applied for mistakes such as **going off-track, dropping the payload, illegal collisions, or violating technical rules**.
  (Refer to the first section of the rulebook for full penalty details.)
- Any team that completes all required stages correctly and within the time limit will receive the **full score for that stage**.
- Scores will be recorded and verified by the judges before the final ranking is announced.

PLAZA

3. Retries & Second Attempts:

- A robot that **fails to complete a specific task cannot retry**.
- In certain challenges, the number of attempts may be limited. Once the allowed attempts are exhausted, the team will receive the available points **without additional retries**.

4. Special Challenge Rules:

- Some challenges, such as **payload transportation, slope navigation, and island battles**, may have **unique scoring systems** based on individual robot performance rather than simply task completion.
- Robots must complete the challenges while adhering to **ethical competition rules**, and they are not allowed to disrupt competing robots' performance **except in designated scenarios** like the **Stage 2 - Fight Race**.

5. Results Announcement:

- Results will be announced **immediately after all teams complete their races**, following performance reviews by the judging panel.
- Teams may submit an **appeal against the results within 15 minutes** of the official announcement. Appeals will be considered only if **clear evidence** is provided.

- The final decision of the **judging committee is irreversible** after the final review.

  ⚠ **Any violation of the scoring rules, attempts to cheat, or manipulation of results will result in immediate disqualification from the competition.**

Arena Diagram:

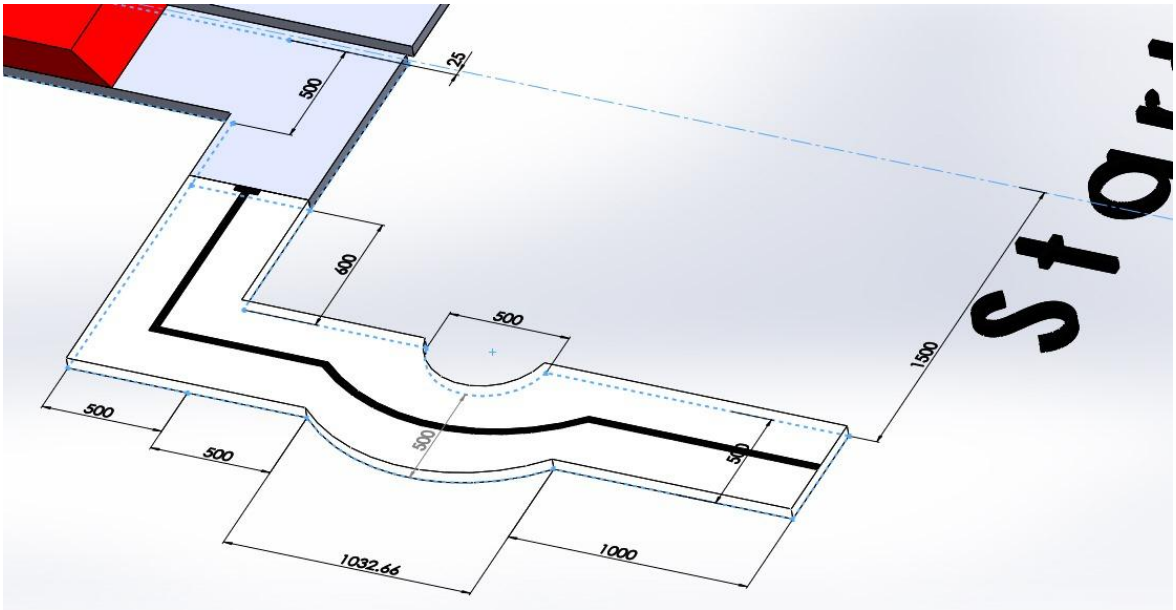

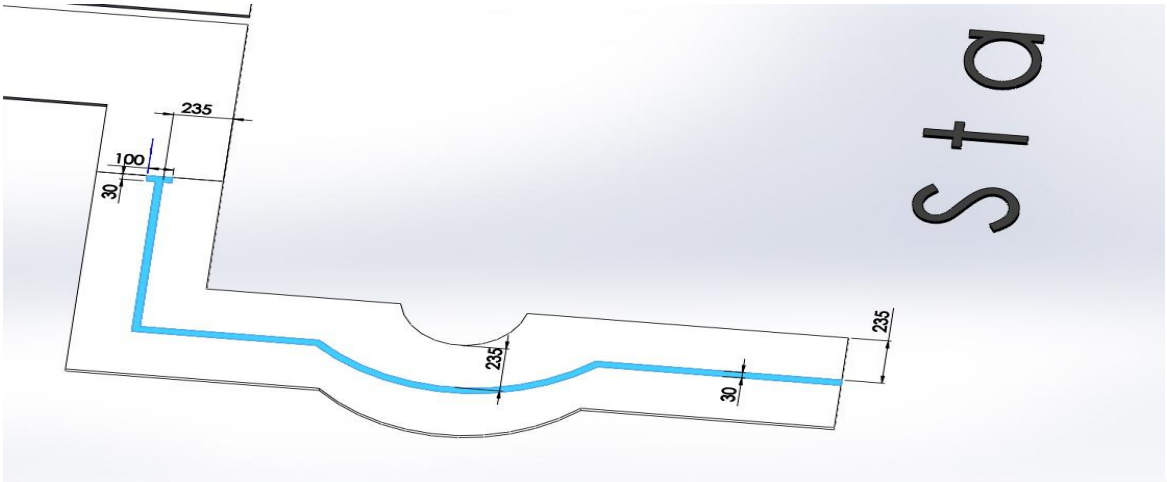

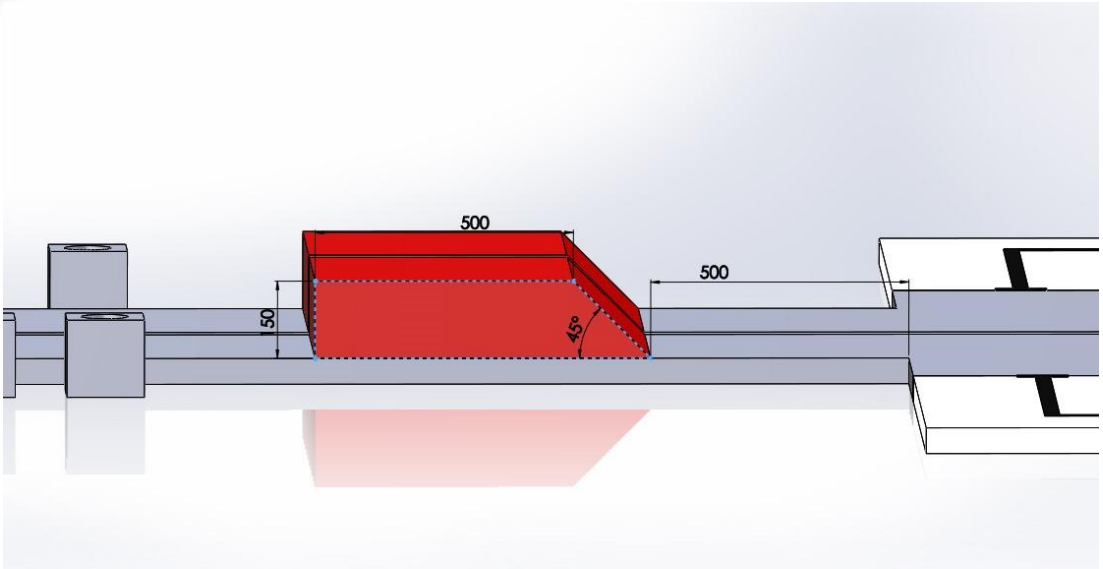
500
500
150
45°

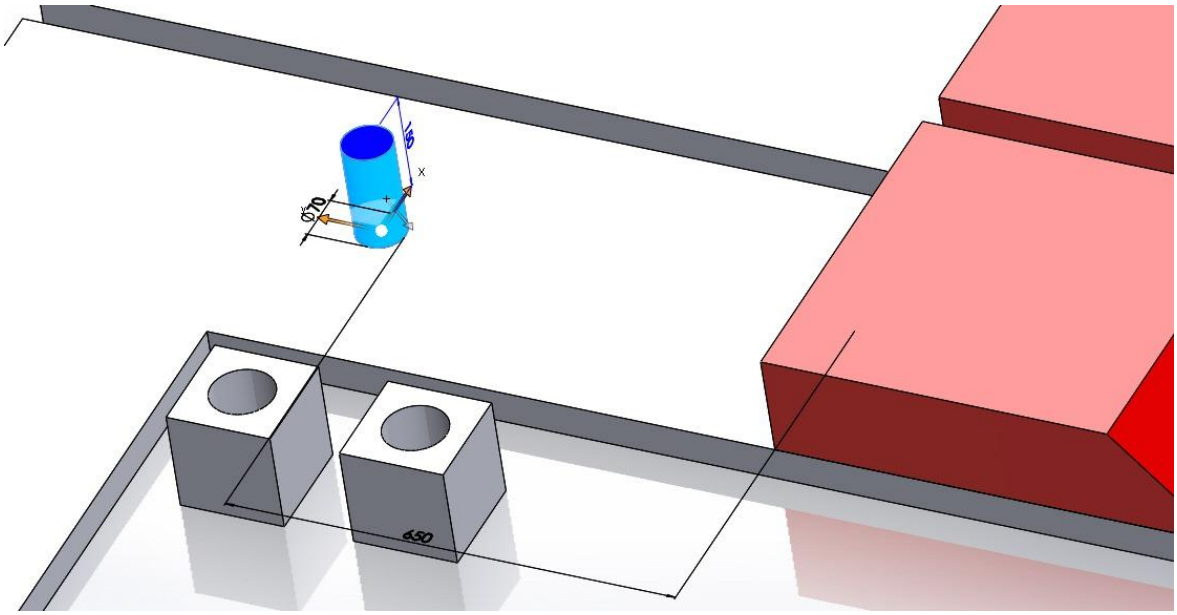
Ø70
x
650

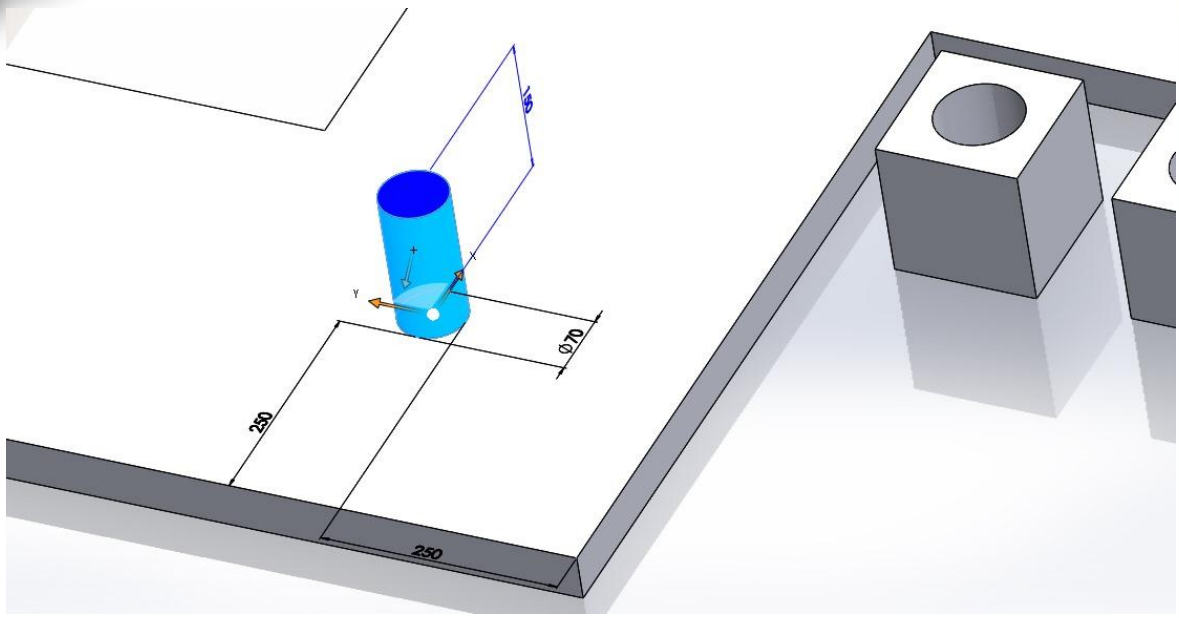
250
250
Ø70
Y
X

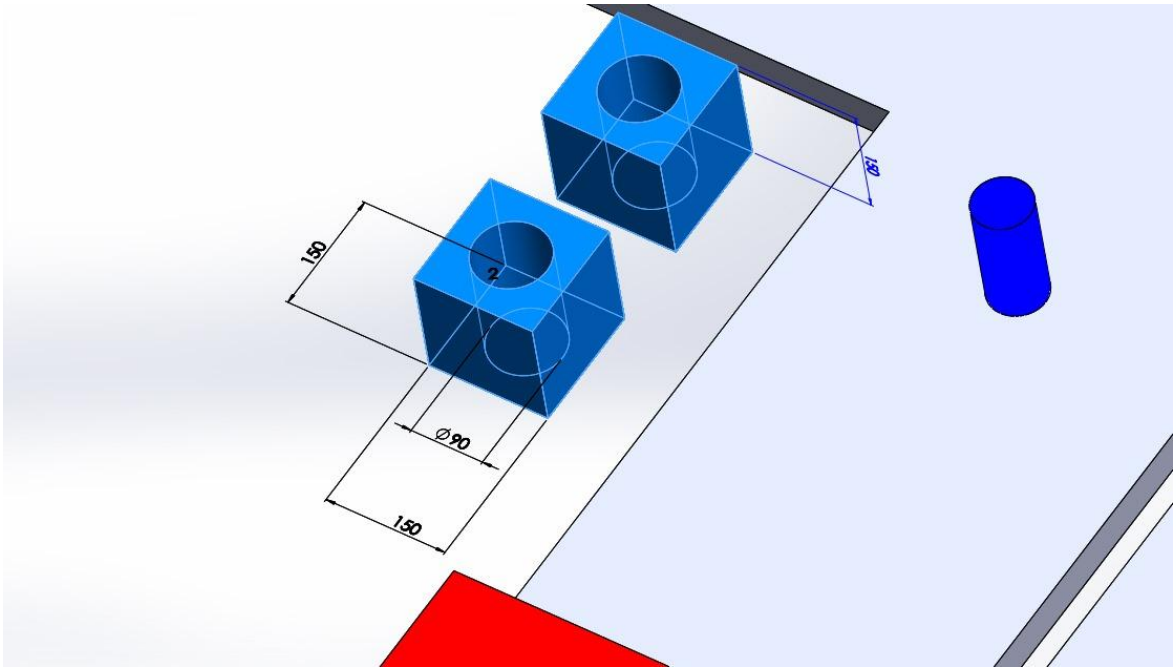
150
150
Ø90
150

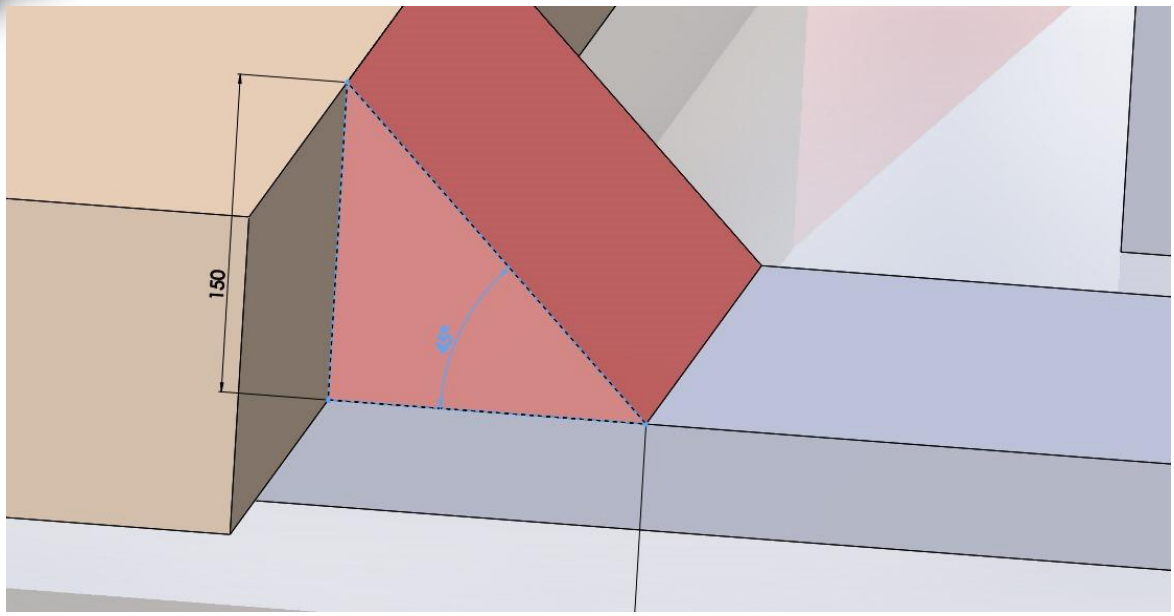
150
45

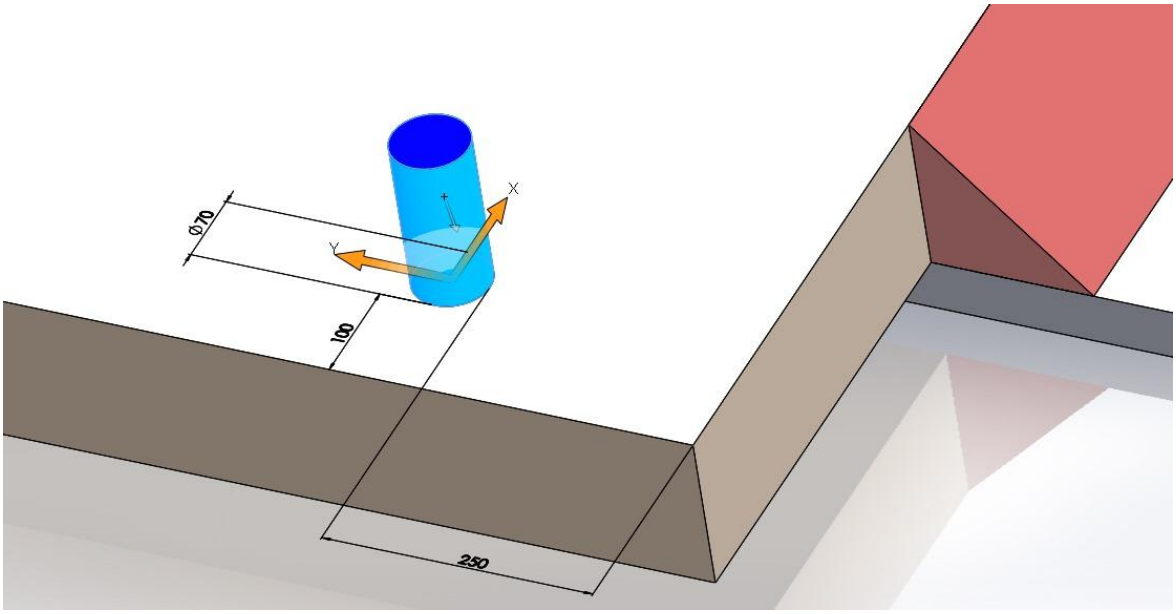
Ø70
X
Y
100
250

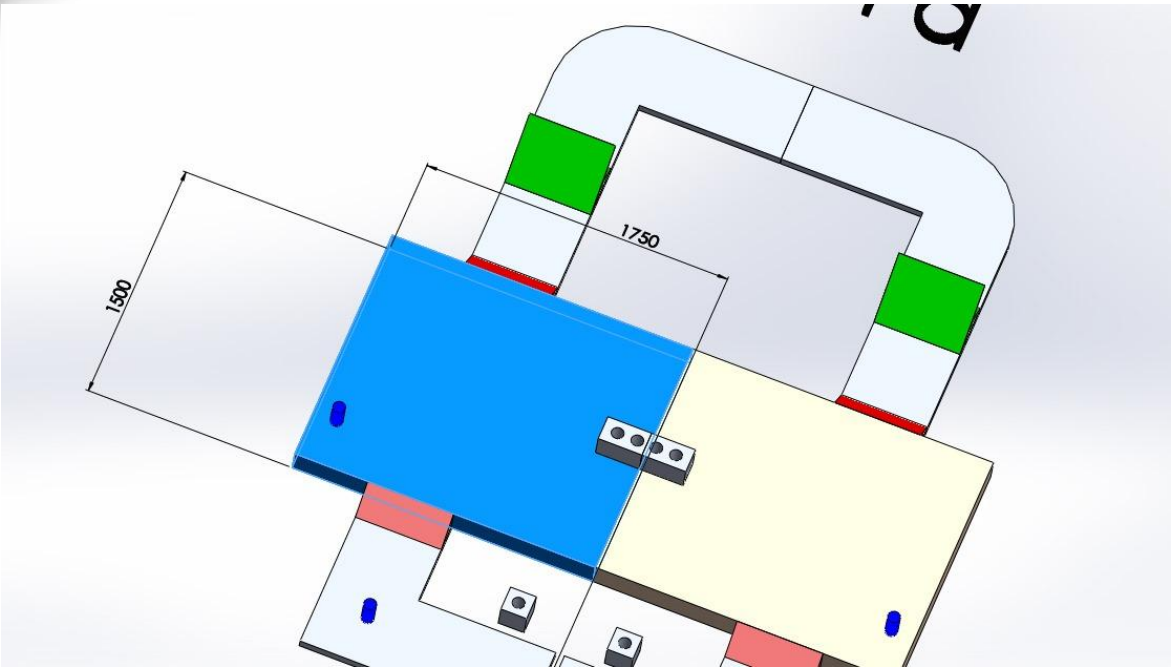
1500
1750

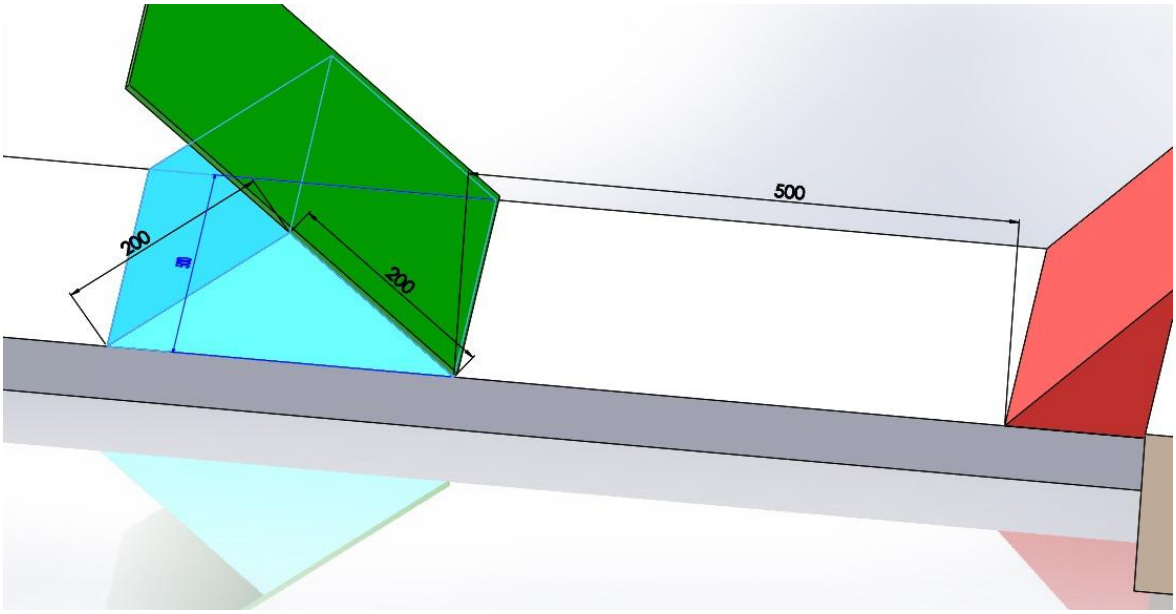
200
200
500

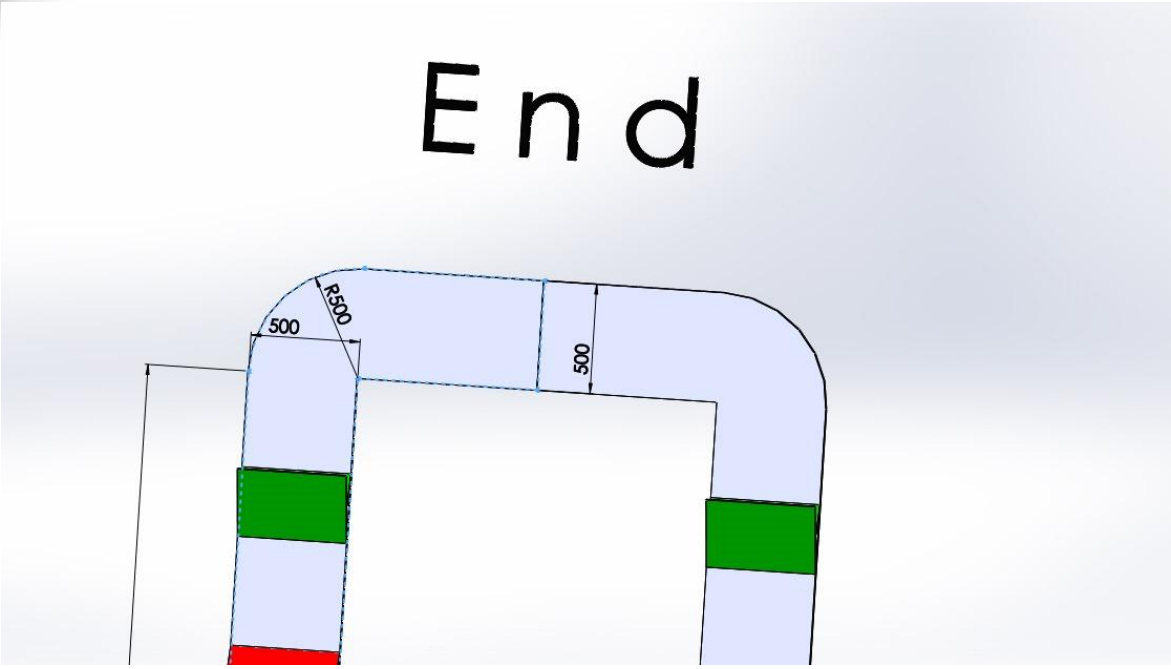

Robot Performance Scenarios and Evaluation Mechanism:

1. If the team fails to complete the **Line Follower** track, they must wait for the full 2 minutes before moving to the next stage, losing all challenge points.
2. If the robot fails to complete the **Line Follower** track, it may proceed to the next stage before the time expires, but 5 points will be deducted (due to the "Robot Touch" rule), and the challenge points will be lost.
3. If the robot **goes off the track** during the **Line Follower** race, it will be returned to the same point, and 5 points will be deducted for going off-track.
4. If the robot **crosses the ramp** but stumbles while descending, adjustments can be made, but 5 points will be deducted (due to the "Robot Touch" rule).

5. If the robot **fails to cross the ramp**, it may skip the challenge, but 5 points will be deducted (Robot Touch rule), and the ramp points will be lost.
6. The team has **3 attempts** to cross the ramp. If unsuccessful, they may skip it, losing 5 points and all ramp challenge points.
7. If the robot **falls off the ramp** and needs to be repositioned, a 5-point deduction applies for each occurrence.
8. If the robot **falls multiple times** while attempting to cross the ramp, 10 points will be deducted (Reminder: only 3 attempts are allowed).
9. If the robot **follows the opponent's track**, 10 points will be deducted.
10. The **only scenario** where a robot is allowed to move **backward or return to a previous stage** is at **Pre-Load Area B**.
    - The robot can carry Load B, place it in the opponent's path, then return and use the alternate path to place Load A, gaining an extra **10 points**.
11. If the robot **intentionally obstructs or hinders** the opponent in an **illegal manner**, a **5-point deduction** will apply.
    - Legal actions include placing **Load B** in the opponent's path and **combat on the island**.

- If a robot is **pushed off-track due to illegal obstruction**, it will be returned to its original position.

12. If a robot **climbs onto the island** and **knocks down Load D** (belonging to the opponent), a **5-point deduction** applies, and the load must be returned to its original position.
13. If the same violation is repeated, a **10-point deduction** will apply, and the load must be returned.
14. **Combat on the island is allowed** in any situation, even when the robot is carrying **Loads C & D**.
15. If the robot **falls off the island**, a **5-point deduction** applies, and it must climb back up.
16. If the robot **falls off the island while carrying Load C or D**, the load must be returned to its original position before being picked up again.
17. The robot **must exit the island and reach the finish line** after completing its tasks.
    - It **must not wait** for the opponent to obstruct or knock them off the island.
    - **Failure to comply will result in a 10-point deduction.**

18. If a robot **deliberately delays task completion** on the island to **wait for the opponent and knock them off again**, a **5-point deduction** will apply (as determined by the referees).
    - If the robot remains stationary for **more than 5 seconds** or **slows down again**, another **5-point deduction** will apply (as determined by the referees).
19. If one robot **completes its island tasks**, the **battle ends**, and the remaining robot **cannot obstruct** it.
    - Any further obstruction is considered **illegal** and will result in a **5-point deduction per attempt**.
20. The robot **cannot climb the island without first carrying Load C**.
    - If the robot attempts to do so, it will **lose Load C points**, be **unable to return for Load C**, and receive a **5-point penalty** (violating the "No Skipping Stages" rule).
21. If the opponent places **both Loads C & D** in **two of the three designated spots** on the island:
    - The robot **must place Load C first** and **cannot** place Load D or skip Load C to place Load D.
    - Load D **will not be counted** if placed before Load C.

- **Exception:** If Load C is dropped **three times**, it is considered **lost**, and the robot may proceed to Load D (according to the "Penalties & Violations" section in the Rulebook).

22. The robot **cannot proceed to the finish line** until all **island tasks are completed**, and all loads are placed in their designated positions.

23. If the required **number is not displayed** on the **screen or 7-segment display**, or if the robot **delays displaying the number for more than 10 seconds**, **5 points will be lost**.

24. If the robot **fails to cross the final ramp**, it may **skip it**, but **5 points will be deducted** (Robot Touch rule), and ramp points (**5 points**) will be lost.

25. If the robot **reaches the finish line but fails to trigger the end buzzer** or **delays by more than 10 seconds**, **buzzer points (5 points) will be lost**.

26. The **minimum score a robot can receive in a match is 0 points**.

27. **Important:**

    - Review the **rules on dropping loads, placing loads incorrectly, going off-track, shutting down, etc.** in the **first section of the Rulebook**.
    - Also, review the **points allocated for each challenge** in the Rulebook.

Safety Requirements:

1. General Robot Safety:

1. The robot must be designed safely, posing no risk to participants, referees, or spectators.
2. The robot must not have *sharp edges* or *hazardous moving parts* that could cause injuries.
3. The use of *flammable or explosive materials* in the robot's construction is strictly prohibited.
4. All moving parts must be securely fastened to prevent detachment during the competition.

2. Electrical Safety:

5. The use of *dangerous voltage levels* exceeding the specified limits in the *Power Rules* is not allowed.
6. Every power source (battery) must be *securely mounted* to prevent accidental detachment or contact with other components.
7. There must be no *exposed wires* or unprotected connections that could cause *short circuits* or *electric shocks*.
8. *Fuses or overcurrent protection systems* must be used in electrical circuits to prevent *sudden current surges*.

3. Mechanical Safety:

9. All mechanical parts must be securely attached to prevent detachment during operation.

10. The robot's outer structure must be *sturdy enough to withstand impacts* without breaking into sharp or dangerous fragments.
11. The use of *blades or sharp tools* that could harm other teams or referees is strictly prohibited.

4. Battery & Power Standards:

12. Only *safe and approved batteries* that comply with competition regulations may be used.
13. Charging batteries while the robot is operating in the arena is prohibited.
14. All batteries must be securely fixed to prevent movement or chemical leakage.
15. *Damaged or swollen batteries* are strictly prohibited from use.
16. The robot's power must be fully disconnected when transporting or servicing it to prevent *accidental activation*.

5. Competition Environment & Arena Safety:

17. No unauthorized individuals are allowed to enter the competition area while robots are operating.
18. Touching the robot while it is active inside the arena is only allowed under the *retry, maintenance, and control rules*.
19. All teams must *immediately shut down their robot* if instructed by referees for safety reasons.

⚠ *Any violation of safety regulations may result in penalties ranging from point deductions to full disqualification from the competition, depending on the severity of the infraction.*

Important Notes:

- The robot **must be programmed** before the match begins.
- **Charging batteries** while the robot is operating in the arena is strictly **prohibited**.
- The **Line Follower design** shown in the initial layout is a **preliminary representation** to indicate track dimensions and **is not the final design**. The final design will be revealed during the **testing phase**.
- A robot **cannot compete under different teams** in the competition.
- **All robots must be submitted** to the committee for **inspection** to ensure compliance with specifications and markings.
    - This is done to **prevent** a robot from being used by multiple teams.
    - Inspections will take place **before the competition**, within the **final deadline set by the committee**.
- **Certificates** will be awarded to **all participating teams**, with special certificates for the **top 3 teams** and winners of special awards (e.g., **Best Mechanical Design**).
- Each team must assign:
    - **One member responsible for the robot**

- Two members responsible for fixing technical issues during matches.

- Make sure to review the first section of the Rulebook.
- Failure to comply with the rules may result in point deductions or disqualification.
- Competition Timeline:

March 2 - March 22, 2025 – Workshops

March 25, 2025 – Components Report & Mechanical Design Submission
(For the Best Mechanical Design Competition)

April 13, 2025 – Draw Day

April 19-20, 2025 – Testing Phase

April 22-24, 2025 – Group Stage Matches

🏆 April 27, 2025 – Finals

PLAZA

Contact Us:

Email: starksmu@gmail.com
Facebook: Starks MU
Instagram: starks.mu
LinkedIn: STARKS MU
WhatsApp: Starks MU

#Follow_Your_Dream ✨
#Starks_MU 🤖
#PLAZA 🚀