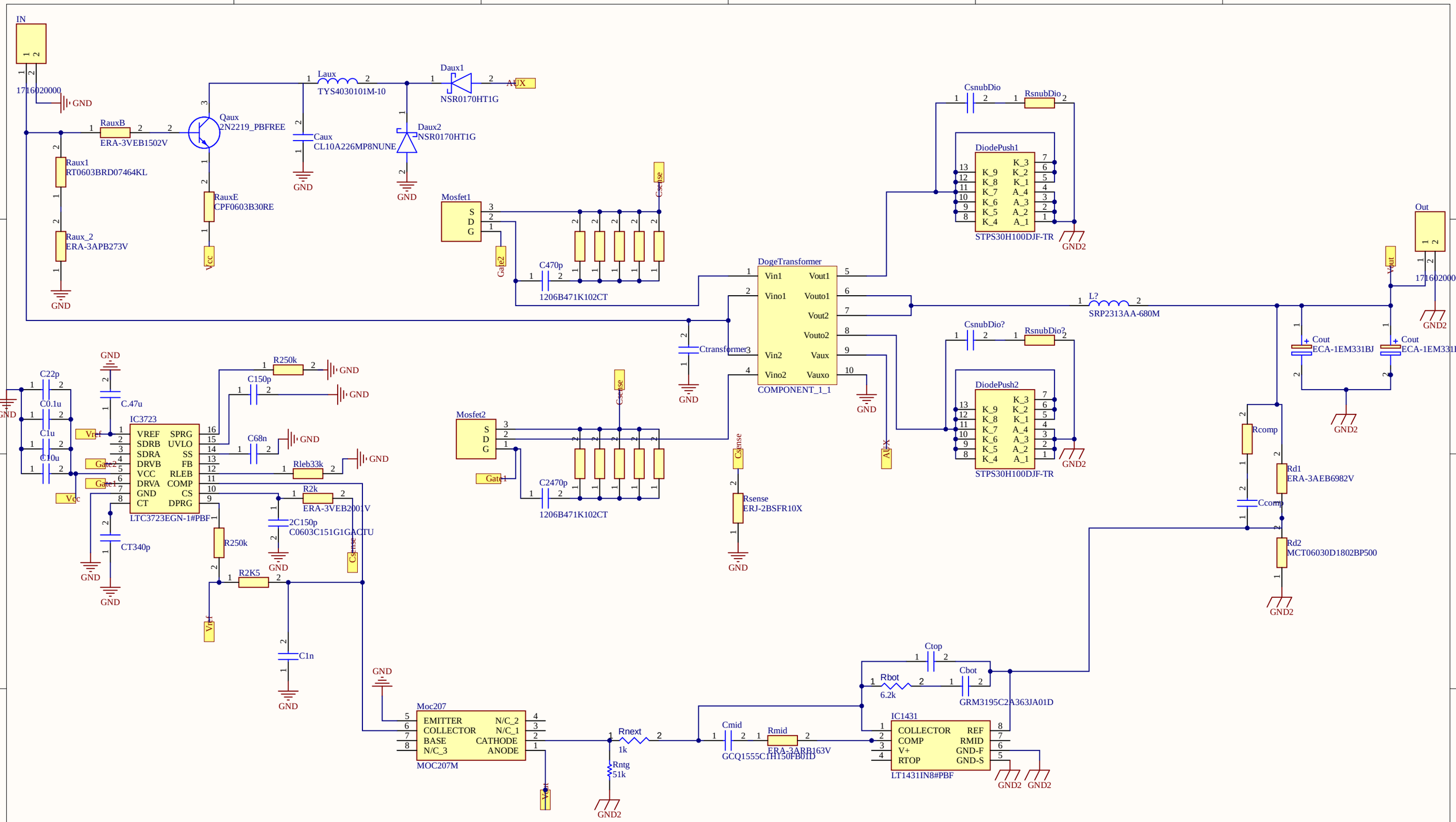

Title	METU Electrical&Electronics Department EE464 - Static Power Consumption Course Term Hardware Project
Size B	Number	Revision
Date: 6/30/2021	Sheet of
File: C:\Users\..\EE464Project.SchDoc	Drawn By:Mustafa Yıldız - Onur Öztaş