05_Electrodes_Electronics
Mittwoch, 13. Juni 2018 10:09

05_Electrodes_Electr...

Brain Computer Interfacing

From Neurons To Data
Session 5: Electronics & Electrodes

Overview of this lecture

- Electrical circuit basics
- Equivalent circuits for EEG
- Noise
- Electrodes

Modern BCI toolchain

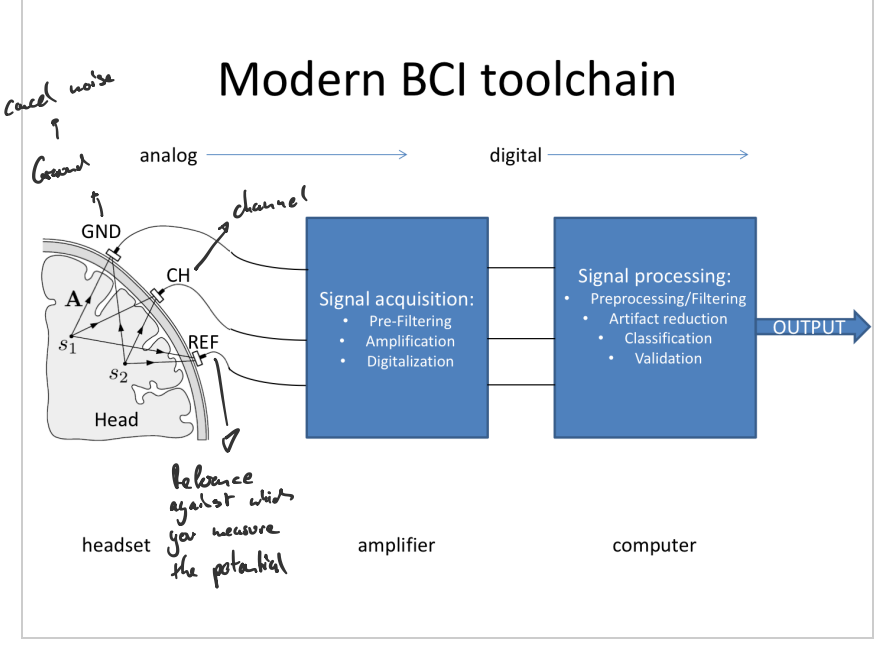
cancel noise
Ground
analog
digital
GND
CH
REF
channel
Head
Signal acquisition:
Pre-Filtering
Amplification
Digitalization
Signal processing:
Preprocessing/Filtering
Artifact reduction
Classification
Validation
OUTPUT
Reference against which you measure the potential
headset
amplifier
computer

EEG signal acquisition

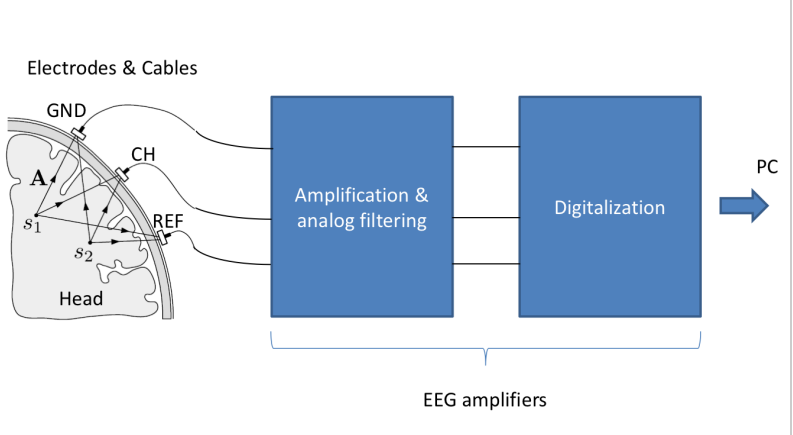
Electrodes & Cables
GND
CH
REF
Head
Amplification & analog filtering
Digitalization
PC
EEG amplifiers

(Keep filters as simple as possible)

Main challenges

- Artefacts (i.e. muscle & eye movements)
- Noise
- Electrode Impedances
- Influence of the measurements on the signal

ELECTRICAL CIRCUIT BASICS

Some electrical circuit basics

- Impedance $Z = R + iX = |Z|e^{-i\phi}$ with $\phi = \arctan(\frac{X}{R})$
- Voltage source $U_s \ldots const.$
- Current source $I_s \ldots const.$
- Op-Amp (operational amplifier) $U_{out} = G(U_+ - U_-)$ G… amplification (very large)

We will only work with current sources to avoid confusion and to get used to a less common treatment, as the neurons are also current sources.

low frequency: complex part doesn't play a big role

A very simple circuit

- $I_S = 10mA$
- $Z_S = R_S = 100\Omega$
- $U_m = Z_S I_S = 1V$

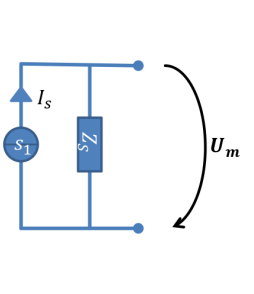

Serial circuit: A voltage divider

- $I_S = 10mA$
- $Z_1 = 400\Omega$
- $Z_2 = 600\Omega$
- $U_s = (Z_1 + Z_2)I_S = 10V$
- $U_m = \frac{Z_2}{Z_1+Z_2}U_S = Z_2 I_S = 6V$

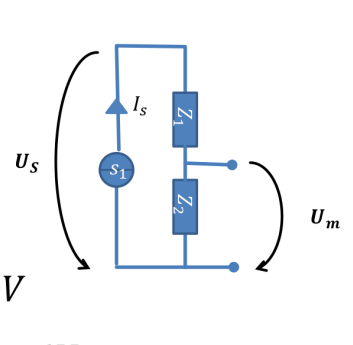

Parallel circuit 1: current divider

- $I_S = 10mA$
- $Z_S = 100\Omega$
- $U_m = (Z_S /\!/ Z_S)I_S = \frac{Z_S Z_S}{Z_S + Z_S}I_S = \frac{Z_S}{2}I_S = 50\Omega \cdot 10mA = 0,5V$

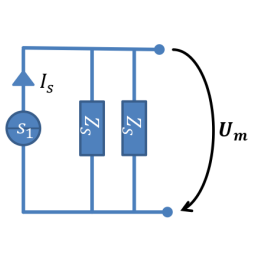

Parallel circuit 2 : current divider

- $I_S = 10mA$
- $Z_1 = 100\Omega$
- $Z_2 = 10\Omega$
- $U_m = (Z_1 /\!/ Z_2)I_S = \frac{Z_1 Z_2}{Z_1 + Z_2}I_S = 9.09\Omega \cdot 10mA = 0,09V$

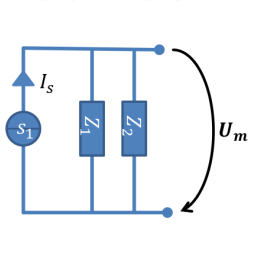

Buffer amplifier / impedance converter

- Feedback amplifier $U_{out} = G(U_+ - U_-)$
- U_a is adjusted until $U_a = U_1 = U_-$

$\rightarrow U_a = U_1$

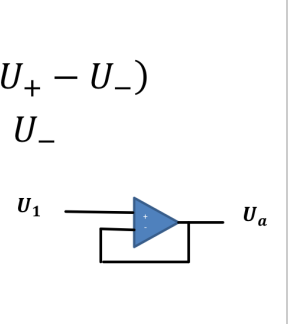

Buffer amplifier

- Feedback amplifier
- U_a is adjusted until $U_1{}' = U_1$
- $U_1' = \frac{R_1}{R_1+R_2}U_a = U_1$

$\rightarrow U_a = \frac{R_1+R_2}{R_1}U_1$

This is how the main amplification is usually implemented in the EEG amps.

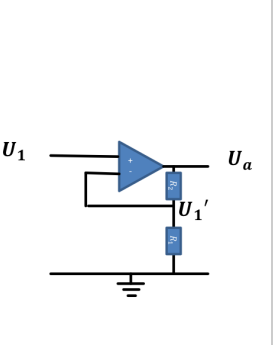

EQUIVALENT CIRCUITS FOR EEG

Simplified Measurement Circuit

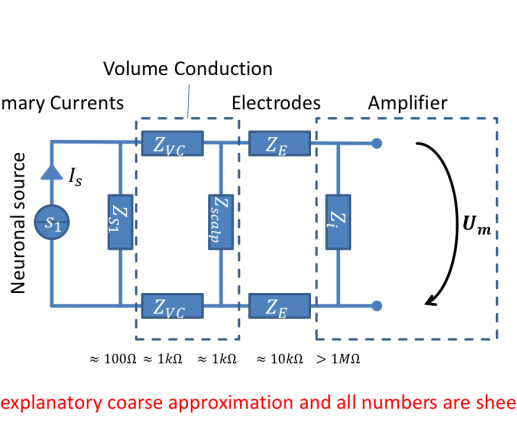
Volume Conduction
Primary Currents
Electrodes
Amplifier
Neuronal source
I_s
S_1
Z_{VC}
Z_E
Z_{S1}
Z_{scalp}
Z_i
U_m
≈ 100Ω ≈ 1kΩ ≈ 1kΩ ≈ 10kΩ > 1MΩ

This is an explanatory coarse approximation and all numbers are sheer estimates!

For frequencies below 100Hz: all Impedances Z Ohmic

How big is the equivalent source current I_s?

- $U_m \approx 1\mu V$ (typically for ERP)
- $U_m = Z_i I_m$
- $I_m = \frac{(2Z_E+Z_i)/\!/Z_{head}}{2Z_E+Z_i}I_{VC} \approx \frac{1}{10}I_{VC}$
- $2Z_E + Z_i \approx 1M\Omega$; $(2Z_E+Z_i)/\!/Z_{head} \approx 1k\Omega$
- $I_{VC} = \frac{Z_{S1}/\!/(2Z_{VC}+(2Z_E+Z_i)/\!/Z_{head})}{2Z_{VC}+(2Z_E+Z_i)/\!/Z_{head}}I_S$
- $2Z_{VC} + (2Z_E+Z_i)/\!/Z_{head} \approx 3k\Omega$
- $I_{VC} \approx \frac{100\Omega/\!/3k\Omega}{3k\Omega}I_S \approx 0.03I_S$
- $U_m \approx 1M\Omega I_m \approx 1M\Omega\frac{1}{10}I_{VC} = 1M\Omega\frac{1}{10}0.03I_s = 3k\Omega I_S$
- $I_S \approx \frac{1}{3k\Omega}1\mu V \approx 0.33nA$ (Buzsaki et al 2012: $I_S \approx 1nA$)
- $J \approx \frac{0.33nA}{2\pi(3\mu m)^2} \approx 5.8A/m^2$ → too much for 1 neuron!
- Literature: 1k → 1M synchrnously active neurons…

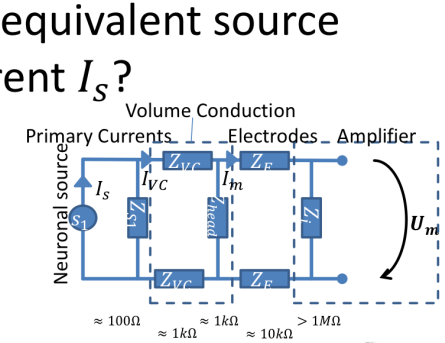
Volume Conduction
Primary Currents
Electrodes
Amplifier
Neuronal source
I_s
I_{VC}
I_m
S_1
Z_{VC}
Z_E
Z_{S1}
Z_{head}
Z_i
U_m
≈ 100Ω ≈ 1kΩ ≈ 1kΩ ≈ 10kΩ > 1MΩ

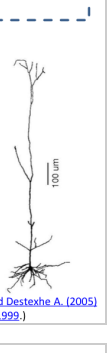

Pyramidal cell
Picture from: Rudolph M, Pelletier J-G, Paré D and Destexhe A. (2005)
Dendrite diameter ≈ 3µm (see Fiala and Harris, 1999.)

Instrumentation amplifier

Differential amplifier:

- high input impedance
- low DC offset
- low drift
- low noise
- high open-loop gain
- high common-mode rejection ratio

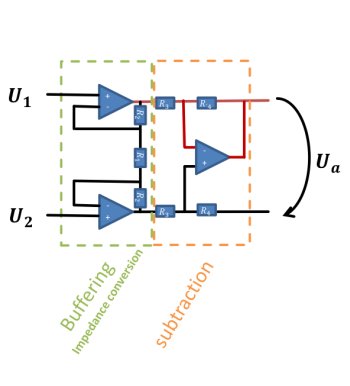
U_1
U_2
U_a
Buffering
impedance conversion
subtraction

$U_a = (1 + \frac{2R_2}{R_1})\frac{R_4}{R_3}(U_1 - U_2)$

Why not directly using an Op-Amp

- Problem: Output clipping
  - Op-Amp output $U_{out} = G(U_+ - U_-)$
  - Usually $G \geq 100.000$
  - Typical supply voltage: $\pm 3V$ to $\pm 15V$
    → easily clipped
  - Common-mode is a problem!

What is common-mode noise?

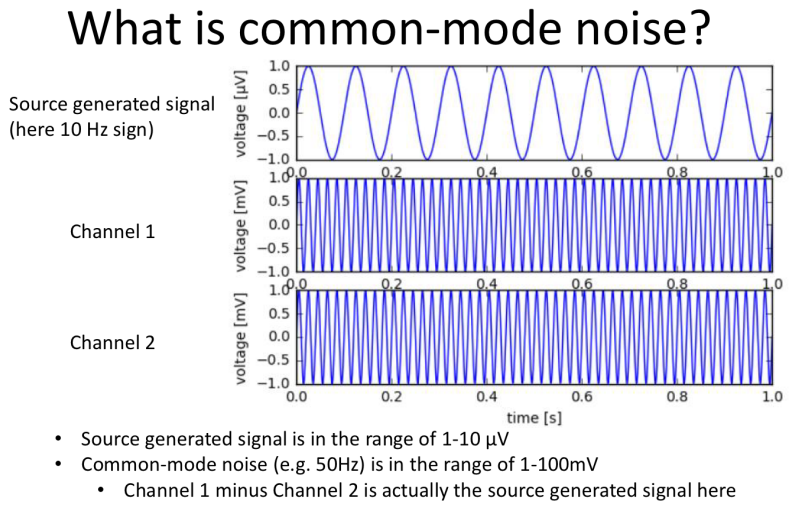

- Source generated signal is in the range of 1-10 µV
- Common-mode noise (e.g. 50Hz) is in the range of 1-100mV
  - Channel 1 minus Channel 2 is actually the source generated signal here
  - Any error in subtraction (=common-mode rejection) leads to strong signal loss & clipping in the output stage
  - CMMR usually: 80-110dB

Common-mode rejection ratio (CMRR)

- Eleminating the common noise on all inputs
- The higher the better
- Resistances have to be precise
  - usually laser –trimmed
  - In particular R_3 and R_4
  (R_2 difference only affects amplification factor)

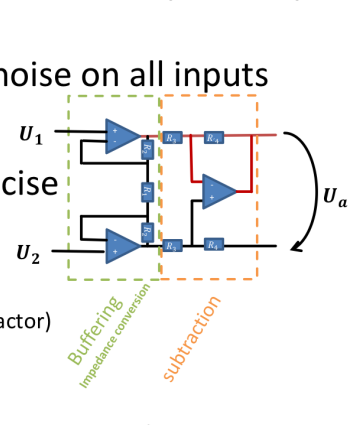
U_1
U_2
U_a
Buffering
subtraction

$U_a = (1 + \frac{2R_2}{R_1})\frac{R_4}{R_3}(U_1 - U_2)$

Classical EEG-Amplifier-Circuit

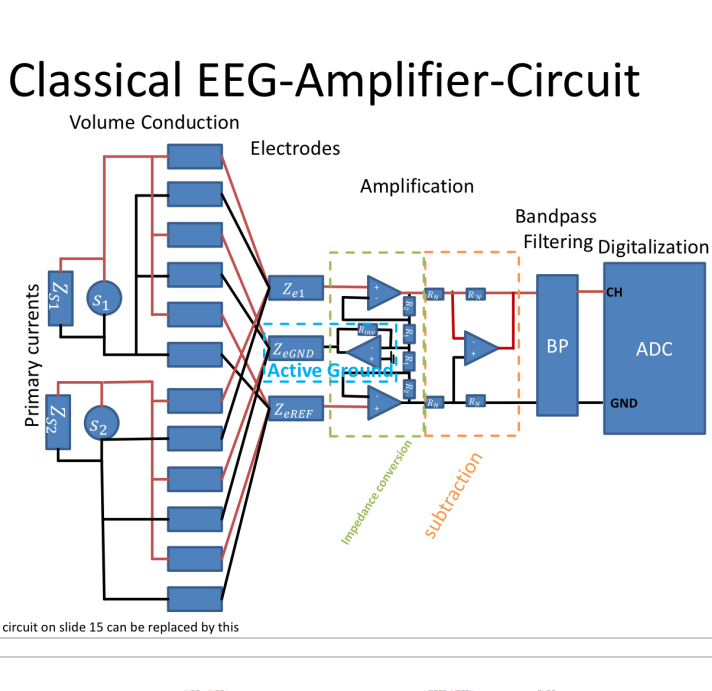
Volume Conduction
Electrodes
Amplification
Bandpass Filtering
Digitalization
Primary currents
Active Ground
BP
ADC
CH
GND
subtraction

The circuit on slide 15 can be replaced by this

Just an IC

ADS1299

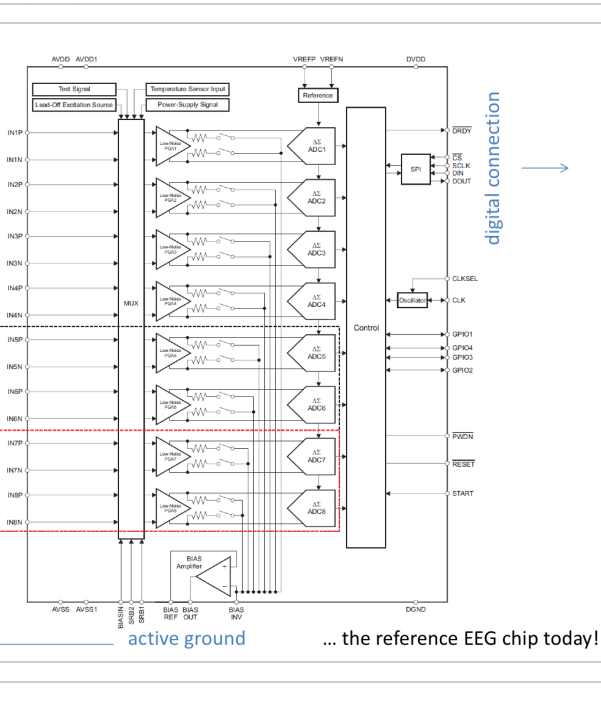
to electrodes
digital connection
active ground

… the reference EEG chip today!

Active Electrode Amplification

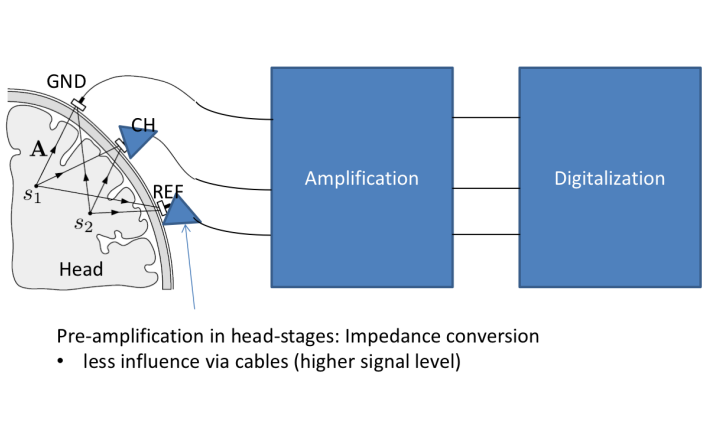
GND
CH
REF
A
Head
Amplification
Digitalization

Pre-amplification in head-stages: Impedance conversion

- less influence via cables (higher signal level)

What do you think is the predominant source of noise in modern EEG recordings?

NOISE & ARTEFACTS

power
always Ref

kind of stationary

Typical EEG spectrum

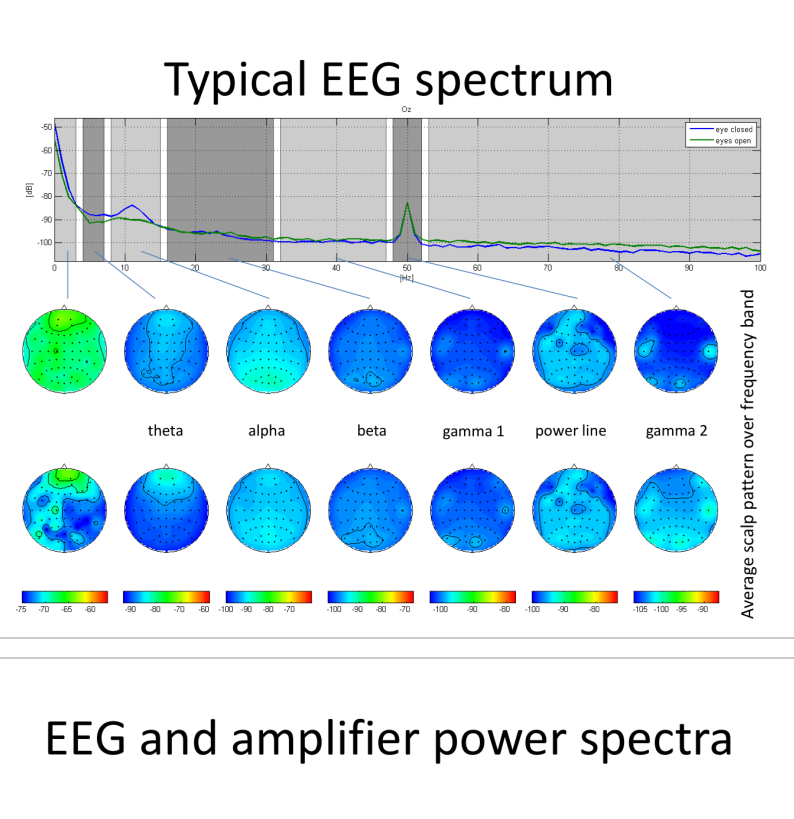

EEG and amplifier power spectra

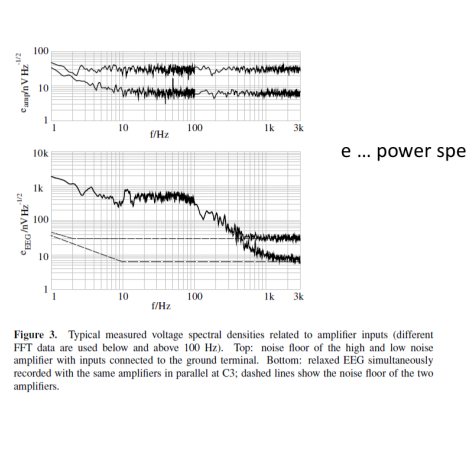

e … power spectral density

From: Hans J Scheer et al 2006 Physiol. Meas. 27 109

Most important noise types in general

- Thermal noise: gaussian white noise
  - any resistance affected: $v_n = \sqrt{4k_B TR\Delta f}$
- Shot noise: white noise but not gaussian (poisson)
  - due to single discrete charges (electrons)
  - Not so important in EEG (large timescale, large No of particles)
- Flicker noise (1/f): gaussian pink noise
  - direct current related
  - Amplifiers
  - Also the brain is mostly considered to produce 1/f background noise

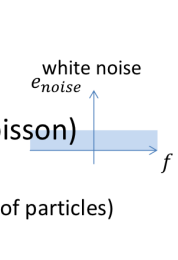

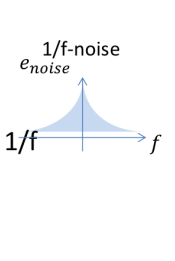

Main sources of noise in EEG

1. Biological background activity (1/f)
2. Amplifier noise (1/f & white noise)
3. Drift currents (low-frequency baseline wandering)
4. Electromagnetic induction (power line, general electromagnetic noise)
5. Interface noise (electrodes: similar to thermal nosie)

1. Biological background activity

- spontaneous brain activity should be considered a noise source of its own, which may interfere with the signal of interest
- Other biological background processes can lead to noise
- Eye and muscle artifacts are usually not described as noise as they are non-stationary
- Strongest noise in EEG!
- 1/f-shape (inter-spike-interval is close to a poisson process)

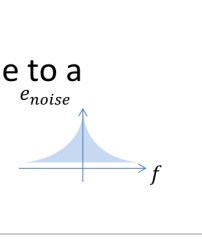

2. Amplifier Noise

- Amplifiers introduce different kinds of noise
  - Mostly 1/f-noise through transistors
  - Also guassian white noise via resistances

3. Drift currents

- Amplifier inputs have small offset currents
- Lead to slow drifts in channels
- Electrical connection of channels counteracts: unnconnected channels or lost electrodes wander around
- High-pass filtering reduces effect

4. Electromagnetic Induction

- Induction law: $\nabla \times \vec{E} = -\delta_t\vec{B}$
  - Magnetic field needs to be non-static
  - Rotor equation: perpendicular effect
  - Producing an electric field, not directly a current!
  - Equivalent to a voltage which leads to currents in closed loops only
- Sinusoidal magnetic field:
  $\vec{B} = B_0 \sin\omega t$
  $\delta_t\vec{B} = \omega B_0 \cos\omega t$
  - The higher the frequency ω, the higher the induction

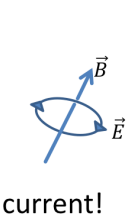

4. Electromagnetic Induction

- Integral form of Induction law:
  $$\oint_{\delta A}\vec{E}\cdot d\vec{s} = \int_A \partial_t\vec{B}\cdot d\vec{A}$$
  - The total electric field produced on the margin δA of an area A is the total magnetic flux through it
- Simple example: circular conductor with homogeneous isotropic magnetic field from power line ($\omega = 2\pi 50Hz$)
  - $\vec{B} = B_0 \sin\omega t\, \vec{e}_z$
  - $A = r(\sin x + \cos y)$
  - $\int_A \partial_t\vec{B}\cdot d\vec{A} = \pi r^2\omega B_0 = \oint_{\partial A}\vec{E}\cdot d\vec{s} = \oint_{\partial A} -\nabla\varphi\cdot d\vec{s} = \varphi_s$
  - $\varphi_s = \pi r^2\omega B_0$ ($B_0 \approx 1\mu T$ but strongly variable)

→ The bigger the radius/loop the bigger the power line noise

Average induction noise (power line) on simplified measurement circuit

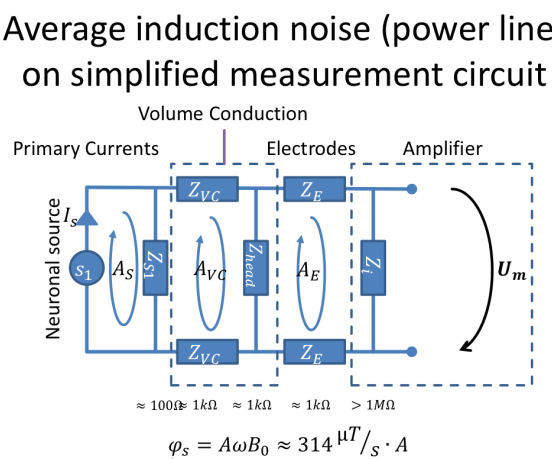
Volume Conduction
Primary Currents
Electrodes
Amplifier
Neuronal source
S_1
A_S
A_{VC}
A_E
Z_{VC}
Z_E
Z_{head}
Z_i
U_m
≈ 100Ω ≈ 1kΩ ≈ 1kΩ ≈ 1kΩ > 1MΩ

$\varphi_s = A\omega B_0 \approx 314\,{}^{\mu T}/_{s}\cdot A$

- $A_S \approx 1mm^2$ → $\varphi_s = 0.3nV$
- $A_{VC} \approx 10cm^2$ → $\varphi_s = 3\,\mu V$ → $U_m \approx {}^1/_3 \cdot 3\mu V = 1\mu V$
- $A_E \approx$
  - $10cm^2$ (active electrodes) $\varphi_s = 3\mu V \approx U_m$
  - $>10cm^2$ (passive electrodes)

Another simplified circuit (concentrating on the amplifiers)

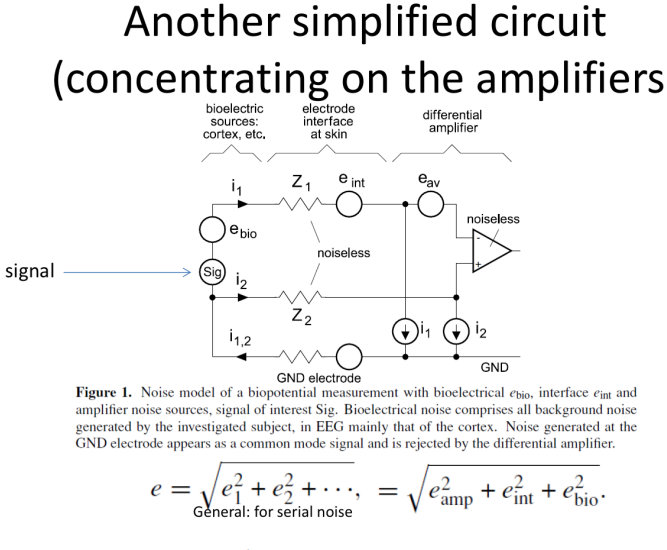
bioelectric sources: cortex, etc.
electrode interface at skin
differential amplifier
signal
i_1
Z_1
e_{int}
e_{av}
e_{bio}
noiseless
noiseless
Sig
i_2
Z_2
$i_{1,2}$
GND electrode
GND

Figure 1. Noise model of a biopotential measurement with bioelectrical e_{bio}, interface e_{int} and amplifier noise sources, signal of interest Sig. Bioelectrical noise comprises all background noise generated by the investigated subject, in EEG mainly that of the cortex. Noise generated at the GND electrode appears as a common mode signal and is rejected by the differential amplifier.

$$e = \sqrt{e_1^2 + e_2^2 + \cdots}, = \sqrt{e_{amp}^2 + e_{int}^2 + e_{bio}^2}.$$

General: for serial noise

$$e_{amp} = \sqrt{|Z_1|^2\cdot i_1^2 + |Z_2|^2\cdot i_2^2 + e_{av}^2}.$$

From: Hans J Scheer et al 2006 Physiol. Meas. 27 109

All together now

Interface (=electrode) noise (Horikawa et al 2003):

$e_{int} = F(f)\sqrt{4kT\cdot\mathrm{Re}\{Z_{int}\}}$.

The frequency-dependent factor F(f) was determined from measurements at the scalp with specific gel between 3 Hz and 100 Hz (F ≈ 27 and F ≈ 3).

$Z_{int} = Z_1 + Z_2$

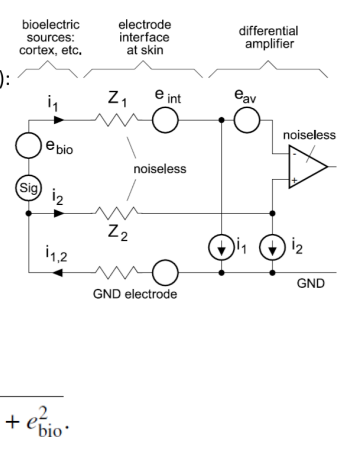
bioelectric sources: cortex, etc.
electrode interface at skin
differential amplifier
i_1
Z_1
e_{int}
e_{av}
e_{bio}
noiseless
noiseless
Sig
i_2
Z_2
$i_{1,2}$
GND electrode
GND

$$e_{amp} = \sqrt{|Z_1|^2\cdot i_1^2 + |Z_2|^2\cdot i_2^2 + e_{av}^2}.$$

$$e_{RES} = \sqrt{e_{amp}^2 + e_{int}^2 + e_{bio}^2}.$$

From: Hans J Scheer et al 2006 Physiol. Meas. 27 109

Noise in the eeg model

Noise mixes up from sources

Most common:

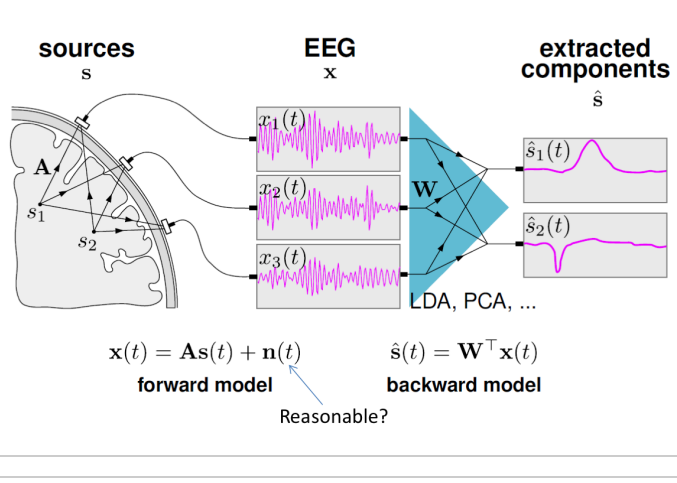
sources
$\mathbf{s}$
EEG
$\mathbf{x}$
extracted components
$\hat{\mathbf{s}}$
$x_1(t)$
$x_2(t)$
$x_3(t)$
$\mathbf{W}$
$\hat{s}_1(t)$
$\hat{s}_2(t)$
LDA, PCA, …

$\mathbf{x}(t) = \mathbf{A}s(t) + \mathbf{n}(t)$ **forward model**

$\hat{s}(t) = \mathbf{W}^\top\mathbf{x}(t)$ **backward model**

Reasonable?

SNR

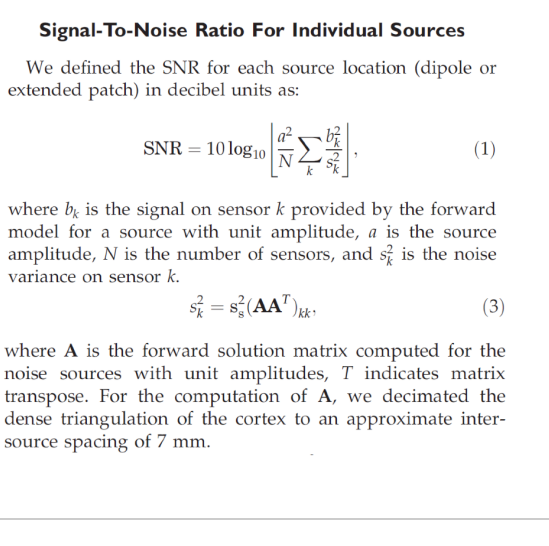

Signal-To-Noise Ratio For Individual Sources

We defined the SNR for each source location (dipole or extended patch) in decibel units as:

$$\mathrm{SNR} = 10\log_{10}\left[\frac{a^2}{N}\sum_k \frac{b_k^2}{s_k^2}\right], \quad (1)$$

where b_k is the signal on sensor k provided by the forward model for a source with unit amplitude, a is the source amplitude, N is the number of sensors, and s_k^2 is the noise variance on sensor k.

$$s_k^2 = s_0^2(\mathbf{A}\mathbf{A}^T)_{kk}, \quad (3)$$

where **A** is the forward solution matrix computed for the noise sources with unit amplitudes, T indicates matrix transpose. For the computation of **A**, we decimated the dense triangulation of the cortex to an approximate inter-source spacing of 7 mm.

From: Goldenholz 2009 Human Brain Mapping: Mapping the signal-to-noise-Ratios of Cortical sources…

Signal Noise Ratio

SNR in MEG vs. EEG

Since instrumentation noise is typically substantially smaller than signals due to spontaneous brain activity [Ebersole and Pedley, 2002; Hämäläinen et al., 1993], an instrumentation noise term was not included in our model.

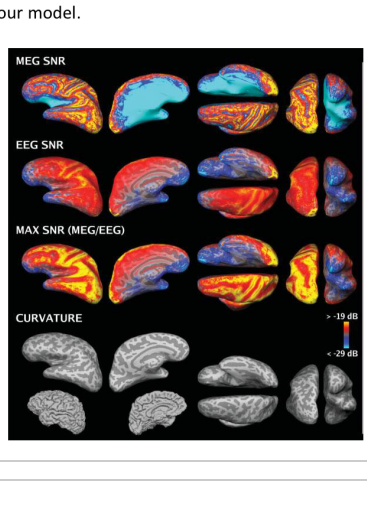
MEG SNR
EEG SNR
MAX SNR (MEG/EEG)
CURVATURE

ELECTRODES

Electrodes: Interface between electronic and ionic conduction

no Skin

Electrons floating

Ions floating

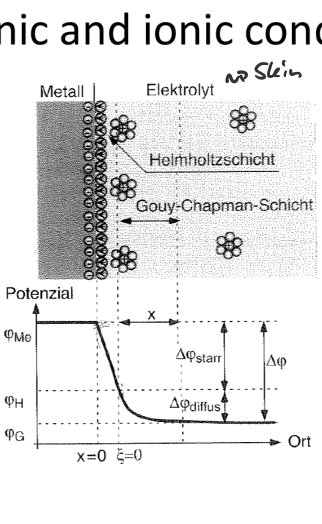
Metall
Elektrolyt
Helmholtzschicht
Gouy-Chapman-Schicht
Potenzial
φ_{Me}
φ_H
φ_{El}
$\Delta\varphi_{Helm}$
$\Delta\varphi$
$\Delta\varphi_{GoCh}$
x
x=0
ξ=0
Ort

Electrode model

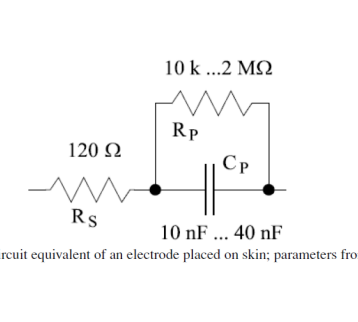
10 k …2 MΩ
R_P
C_P
120 Ω
R_S
10 nF … 40 nF

Figure 2. Circuit equivalent of an electrode placed on skin; parameters from Rosell et al (1988).

From: Hans J Scheer et al 2006 Physiol. Meas. 27 109

Electrodes

Wet

- Ag-/AgCl-gel
  - Good impedances (<10kΩ)
  - Acceptable movement sensitivity
  - Tedious application
- Sponges with NaCL-solution
  - Easy application
  - Acceptable impedances
  - Movement sensitive

Dry

- E.g. metal, conducting polymers
  - Very easy application
  - High impedances
  - Movement sensitive
  - Irritating scalp pressure

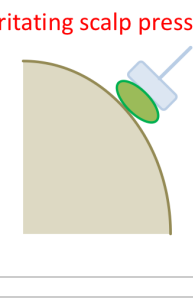

Problems with electrodes

- Unknown and variable contact impedance
- Mostly unknown contact surface
- Influence on measurements
  - Signal-To-Noise ratio (SNR)
  - shortcuts (gel electrodes)

Electrode impedances

- $Z_i \geq 1M\Omega$; $U_s \approx 1\mu V$
- $U_m \approx \frac{Z_i}{Z_i + 2Z_E}U_s$
- *Example:* (active wet electrodes)
  $Z_E \approx 1k\Omega \approx \frac{1}{1000}Z_i$
  $U_m \approx U_s$
- *Example:* (dry electrodes)
  $Z_E \approx 100k\Omega \approx \frac{1}{10}Z_i$
  $U_m \approx \frac{5}{6}U_s$

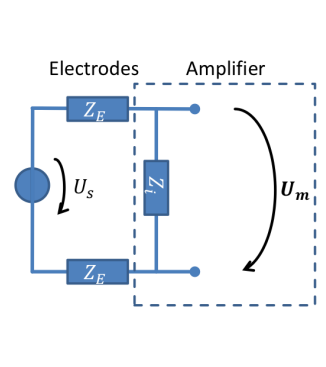
Electrodes
Amplifier
Z_E
U_s
Z_i
U_m

But additionally: the higher the impedance, the higher the noise (compare slide 36)!

➡ **The higher Z_i, the lower SNR**