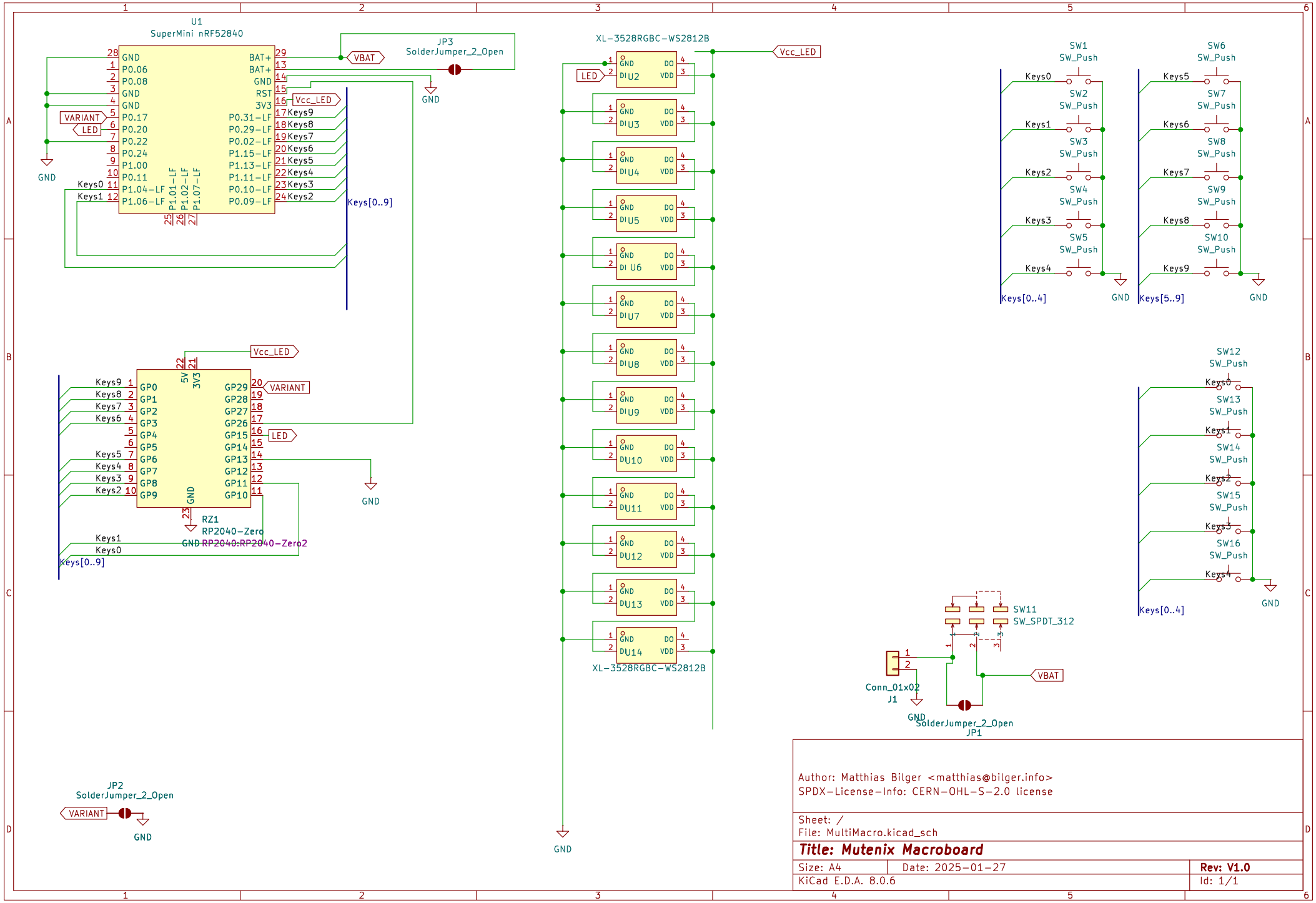

Author: Matthias Bilger <matthias@bilger.info>
SPDX-License-Info: CERN-OHL-S-2.0 license

Sheet: /
File: MultiMacro.kicad_sch

Title: Mutenix Macroboard

Size: A4	Date: 2025-01-27	**Rev: V1.0**
KiCad E.D.A. 8.0.6		Id: 1/1