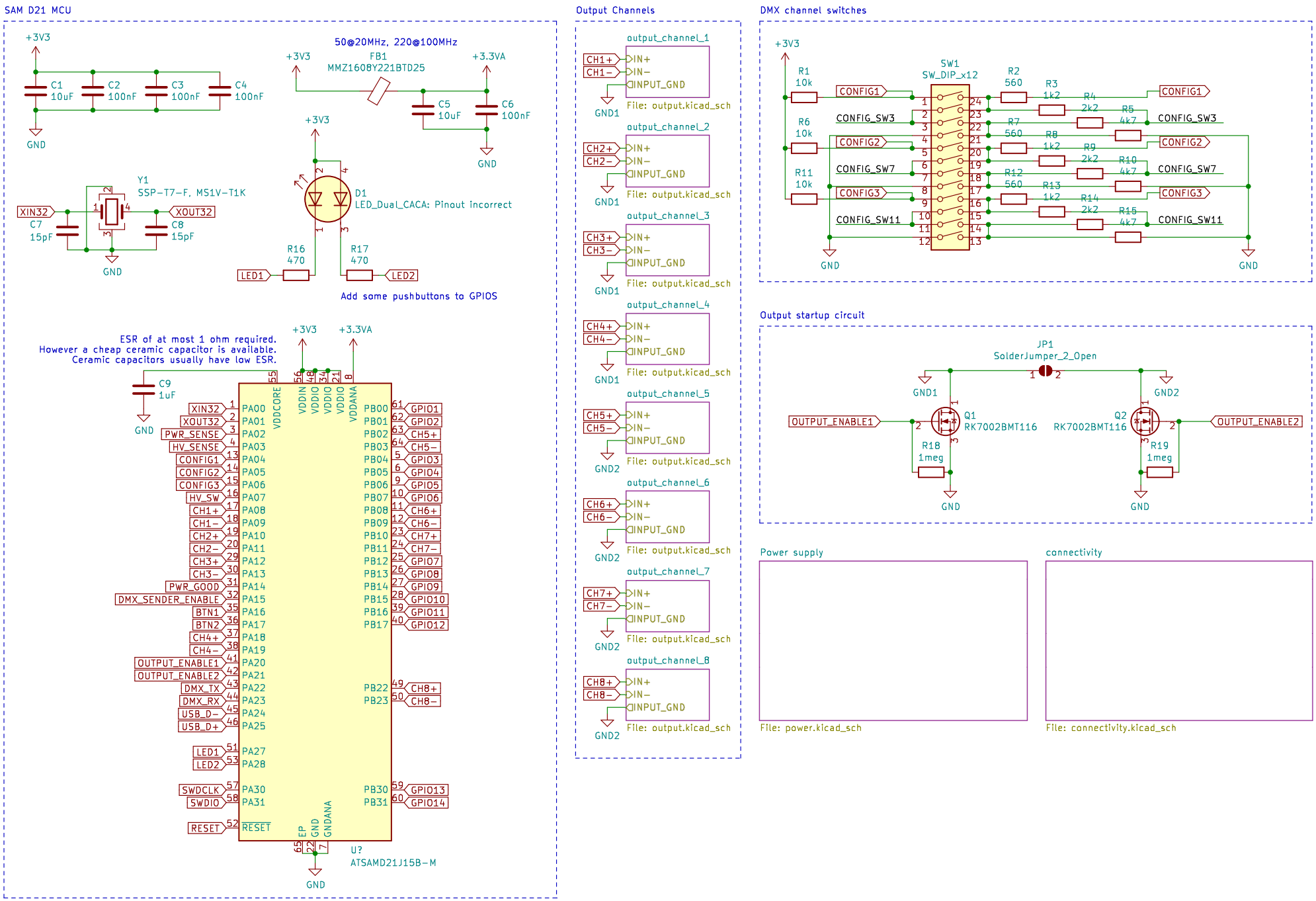
SAM D21 MCU
+3V3
C1
10uF
C2
100nF
C3
100nF
C4
100nF
GND
50@20MHz, 220@100MHz
+3V3
FB1
MMZ1608Y221BTD25
+3.3VA
C5
10uF
C6
100nF
GND
Y1
SSP-T7-F, MS1V-T1K
XIN32
XOUT32
C7
15pF
C8
15pF
GND
+3V3
D1
LED_Dual_CACA: Pinout incorrect
R16
470
R17
470
LED1
LED2
Add some pushbuttons to GPIOS
ESR of at most 1 ohm required.
However a cheap ceramic capacitor is available.
Ceramic capacitors usually have low ESR.
+3V3
+3.3VA
C9
1uF
GND
U?
ATSAMD21J15B-M
PA00
PA01
PA02
PA03
PA04
PA05
PA06
PA07
PA08
PA09
PA10
PA11
PA12
PA13
PA14
PA15
PA16
PA17
PA18
PA19
PA20
PA21
PA22
PA23
PA24
PA25
PA27
PA28
PA30
PA31
RESET
PB00
PB01
PB02
PB03
PB04
PB05
PB06
PB07
PB08
PB09
PB10
PB11
PB12
PB13
PB14
PB15
PB16
PB17
PB22
PB23
PB30
PB31
XIN32
XOUT32
PWR_SENSE
HV_SENSE
CONFIG1
CONFIG2
CONFIG3
HV_SW
CH1+
CH1-
CH2+
CH2-
CH3+
CH3-
PWR_GOOD
DMX_SENDER_ENABLE
BTN1
BTN2
CH4+
CH4-
OUTPUT_ENABLE1
OUTPUT_ENABLE2
DMX_TX
DMX_RX
USB_D-
USB_D+
LED1
LED2
SWDCLK
SWDIO
RESET
GPIO1
GPIO2
CH5+
CH5-
GPIO3
GPIO4
GPIO5
GPIO6
CH6+
CH6-
CH7+
CH7-
GPIO7
GPIO8
GPIO9
GPIO10
GPIO11
GPIO12
CH8+
CH8-
GPIO13
GPIO14
Output Channels
output_channel_1
CH1+
CH1-
INPUT_GND
GND1
File: output.kicad_sch
output_channel_2
CH2+
CH2-
INPUT_GND
GND1
File: output.kicad_sch
output_channel_3
CH3+
CH3-
INPUT_GND
GND1
File: output.kicad_sch
output_channel_4
CH4+
CH4-
INPUT_GND
GND1
File: output.kicad_sch
output_channel_5
CH5+
CH5-
INPUT_GND
GND2
File: output.kicad_sch
output_channel_6
CH6+
CH6-
INPUT_GND
GND2
File: output.kicad_sch
output_channel_7
CH7+
CH7-
INPUT_GND
GND2
File: output.kicad_sch
output_channel_8
CH8+
CH8-
INPUT_GND
GND2
File: output.kicad_sch
DMX channel switches
+3V3
SW1
SW_DIP_x12
R1
10k
R6
10k
R11
10k
CONFIG1
CONFIG_SW3
CONFIG2
CONFIG_SW7
CONFIG3
CONFIG_SW11
R2
560
R3
1k2
R4
2k2
R5
4k7
R7
560
R8
1k2
R9
2k2
R10
4k7
R12
560
R13
1k2
R14
2k2
R15
4k7
GND
GND
Output startup circuit
JP1
SolderJumper_2_Open
GND1
GND2
OUTPUT_ENABLE1
OUTPUT_ENABLE2
Q1
RK7002BMT116
Q2
RK7002BMT116
R18
1meg
R19
1meg
GND
GND
Power supply
File: power.kicad_sch
connectivity
File: connectivity.kicad_sch

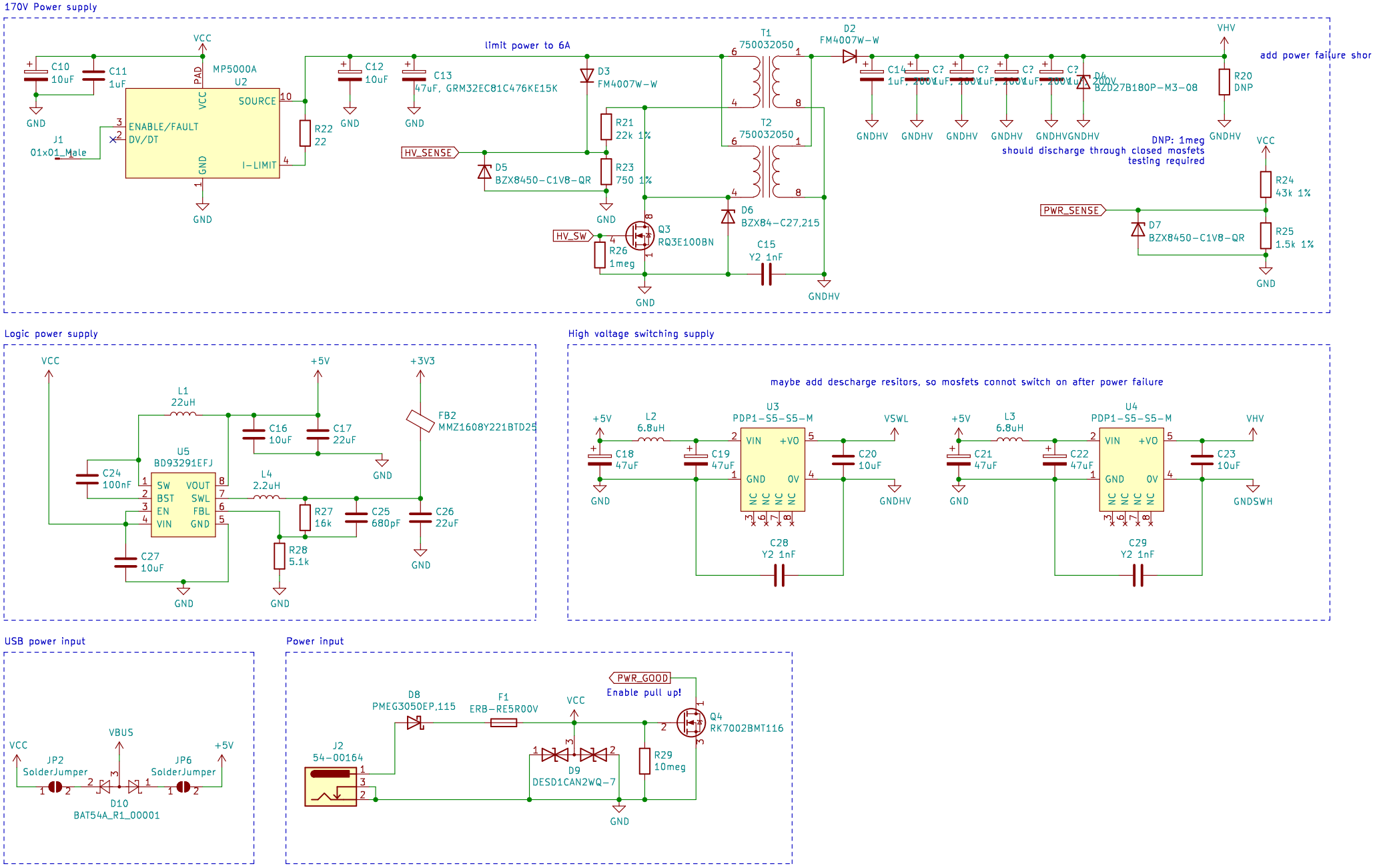
170V Power supply
limit power to 6A
add power failure shor
DNP: 1meg
should discharge through closed mosfets
testing required
Logic power supply
High voltage switching supply
maybe add descharge resitors, so mosfets connot switch on after power failure
USB power input
Power input
Enable pull up!

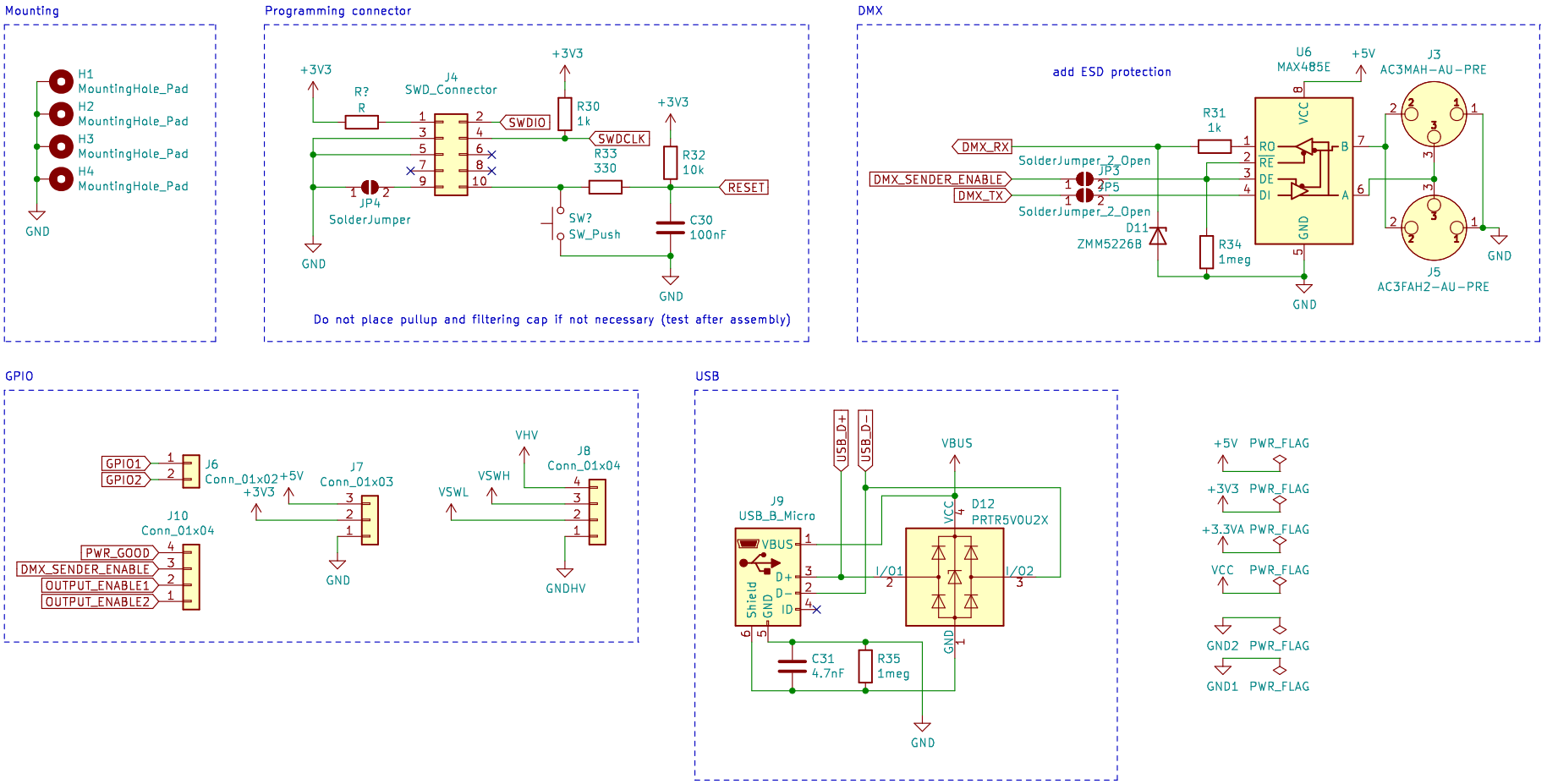
Mounting
H1
MountingHole_Pad
H2
MountingHole_Pad
H3
MountingHole_Pad
H4
MountingHole_Pad
GND
Programming connector
+3V3
R?
R
J4
SWD_Connector
SWDIO
SWDCLK
RESET
R30
1k
R33
330
R32
10k
C30
100nF
SW?
SW_Push
JP4
SolderJumper
GND
Do not place pullup and filtering cap if not necessary (test after assembly)
DMX
add ESD protection
U6
MAX485E
+5V
J3
AC3MAH-AU-PRE
J5
AC3FAH2-AU-PRE
DMX_RX
DMX_SENDER_ENABLE
DMX_TX
SolderJumper_2_Open
JP3
JP5
R31
1k
R34
1meg
D11
ZMM5226B
RO
RE
DE
DI
VCC
GND
A
B
GPIO
GPIO1
GPIO2
J6
Conn_01x02
J7
Conn_01x03
J8
Conn_01x04
VHV
VSWH
VSWL
GNDHV
J10
Conn_01x04
PWR_GOOD
DMX_SENDER_ENABLE
OUTPUT_ENABLE1
OUTPUT_ENABLE2
USB
USB_D+
USB_D-
VBUS
J9
USB_B_Micro
Shield
D+
D-
ID
D12
PRTR5V0U2X
I/O1
I/O2
C31
4.7nF
R35
1meg
+5V PWR_FLAG
+3V3 PWR_FLAG
+3.3VA PWR_FLAG
VCC PWR_FLAG
GND2 PWR_FLAG
GND1 PWR_FLAG

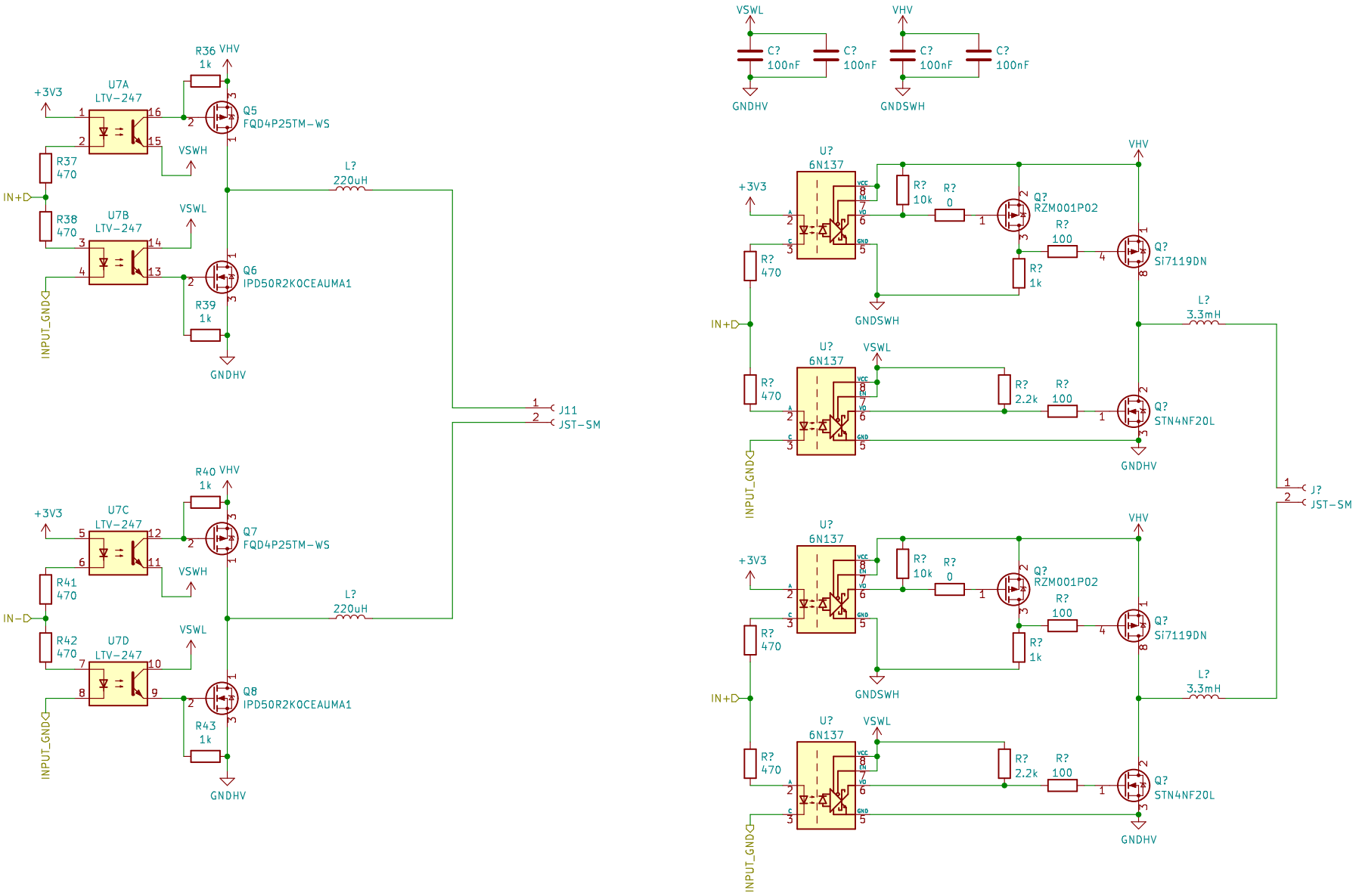
VSWL
VHV
C?
100nF
C?
100nF
C?
100nF
C?
100nF
GNDHV
GNDSWH
R36
1k
VHV
+3V3
U7A
LTV-247
Q5
FQD4P25TM-WS
R37
470
IN+
VSWH
L?
220uH
R38
470
U7B
LTV-247
VSWL
Q6
IPD50R2K0CEAUMA1
R39
1k
INPUT_GND
GNDHV
J11
JST-SM
R40
1k
VHV
+3V3
U7C
LTV-247
Q7
FQD4P25TM-WS
R41
470
IN-
VSWH
L?
220uH
R42
470
U7D
LTV-247
VSWL
Q8
IPD50R2K0CEAUMA1
R43
1k
INPUT_GND
GNDHV
U?
6N137
+3V3
R?
10k
R?
0
Q?
RZM001P02
R?
100
Q?
Si7119DN
R?
470
R?
1k
GNDSWH
VHV
L?
3.3mH
IN+
U?
6N137
VSWL
R?
470
R?
2.2k
R?
100
Q?
STN4NF20L
INPUT_GND
GNDHV
J?
JST-SM
U?
6N137
+3V3
R?
10k
R?
0
Q?
RZM001P02
R?
100
Q?
Si7119DN
R?
470
R?
1k
GNDSWH
VHV
L?
3.3mH
IN+
U?
6N137
VSWL
R?
470
R?
2.2k
R?
100
Q?
STN4NF20L
INPUT_GND
GNDHV

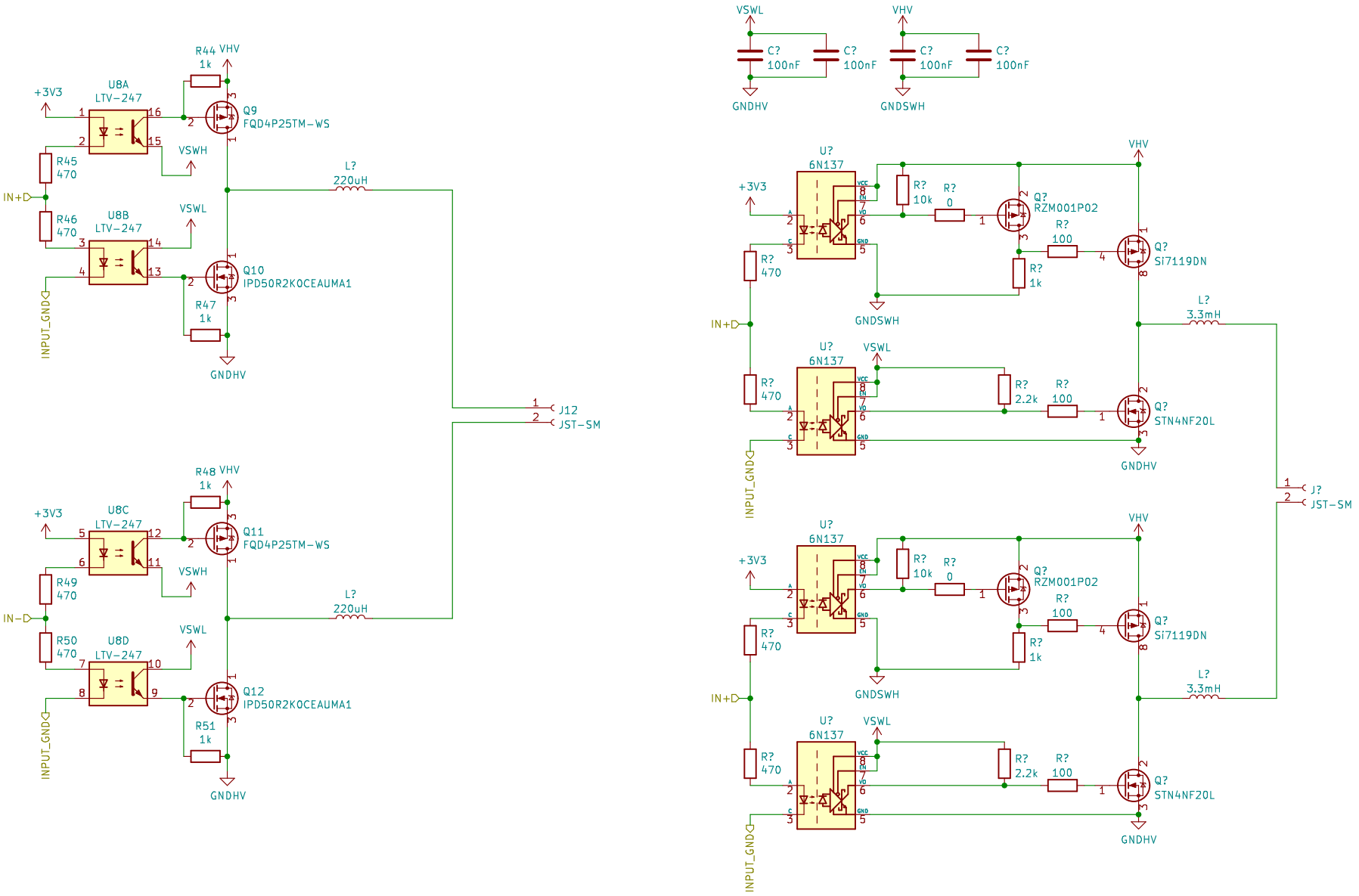
R44 VHV
1k
+3V3
U8A
LTV-247
Q9
FQD4P25TM-WS
R45
470
VSWH
L?
220uH
IN+
R46
470
U8B
LTV-247
VSWL
Q10
IPD50R2K0CEAUMA1
R47
1k
INPUT_GND
GNDHV
1
J12
2
JST-SM
R48 VHV
1k
+3V3
U8C
LTV-247
Q11
FQD4P25TM-WS
R49
470
VSWH
L?
220uH
IN-
R50
470
U8D
LTV-247
VSWL
Q12
IPD50R2K0CEAUMA1
R51
1k
INPUT_GND
GNDHV
VSWL
C?
100nF
C?
100nF
GNDHV
VHV
C?
100nF
C?
100nF
GNDSWH
U?
6N137
+3V3
R?
10k
R?
0
Q?
RZM001P02
R?
100
Q?
Si7119DN
R?
470
R?
1k
GNDSWH
VHV
L?
3.3mH
IN+
U?
6N137
VSWL
R?
2.2k
R?
100
Q?
STN4NF20L
R?
470
INPUT_GND
GNDHV
1
J?
2
JST-SM
U?
6N137
+3V3
R?
10k
R?
0
Q?
RZM001P02
R?
100
Q?
Si7119DN
R?
470
R?
1k
GNDSWH
VHV
L?
3.3mH
IN+
U?
6N137
VSWL
R?
2.2k
R?
100
Q?
STN4NF20L
R?
470
INPUT_GND
GNDHV

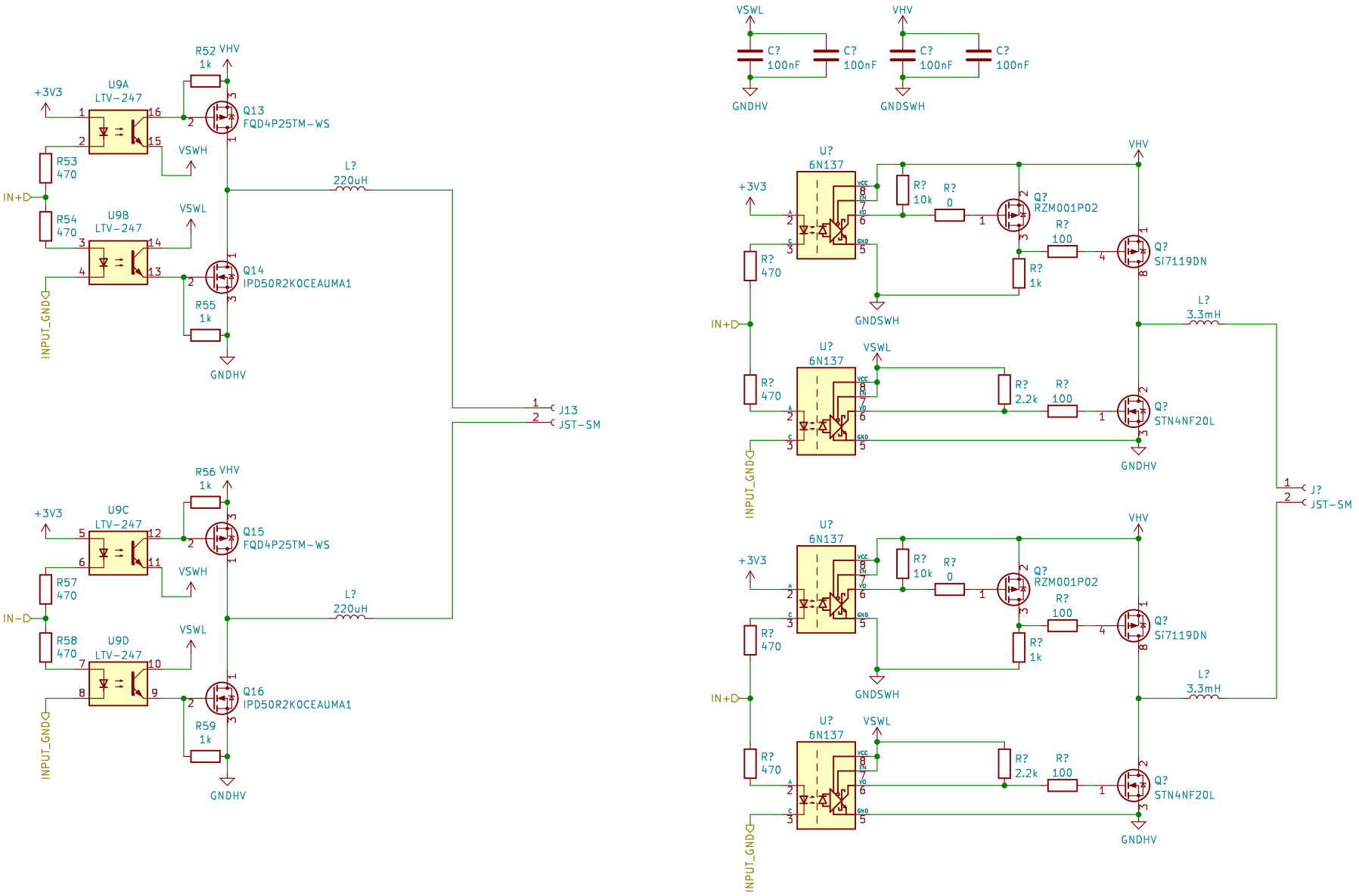
VSWL
VHV
C? 100nF
C? 100nF
C? 100nF
C? 100nF
GNDHV
GNDSWH
R52 1k
VHV
+3V3
U9A LTV-247
Q13 FQD4P25TM-WS
R53 470
VSWH
L? 220uH
IN+
R54 470
U9B LTV-247
VSWL
Q14 IPD50R2K0CEAUMA1
R55 1k
INPUT_GND
GNDHV
1 J13 2 JST-SM
R56 1k
VHV
+3V3
U9C LTV-247
Q15 FQD4P25TM-WS
R57 470
VSWH
L? 220uH
IN-
R58 470
U9D LTV-247
VSWL
Q16 IPD50R2K0CEAUMA1
R59 1k
INPUT_GND
GNDHV
U? 6N137
+3V3
R? 10k
R? 0
Q? RZM001P02
R? 100
Q? Si7119DN
R? 470
R? 1k
GNDSWH
VHV
L? 3.3mH
IN+
U? 6N137
VSWL
R? 470
R? 2.2k
R? 100
Q? STN4NF20L
INPUT_GND
GNDHV
1 J? 2 JST-SM
U? 6N137
+3V3
R? 10k
R? 0
Q? RZM001P02
R? 100
Q? Si7119DN
R? 470
R? 1k
GNDSWH
VHV
L? 3.3mH
IN+
U? 6N137
VSWL
R? 470
R? 2.2k
R? 100
Q? STN4NF20L
INPUT_GND
GNDHV

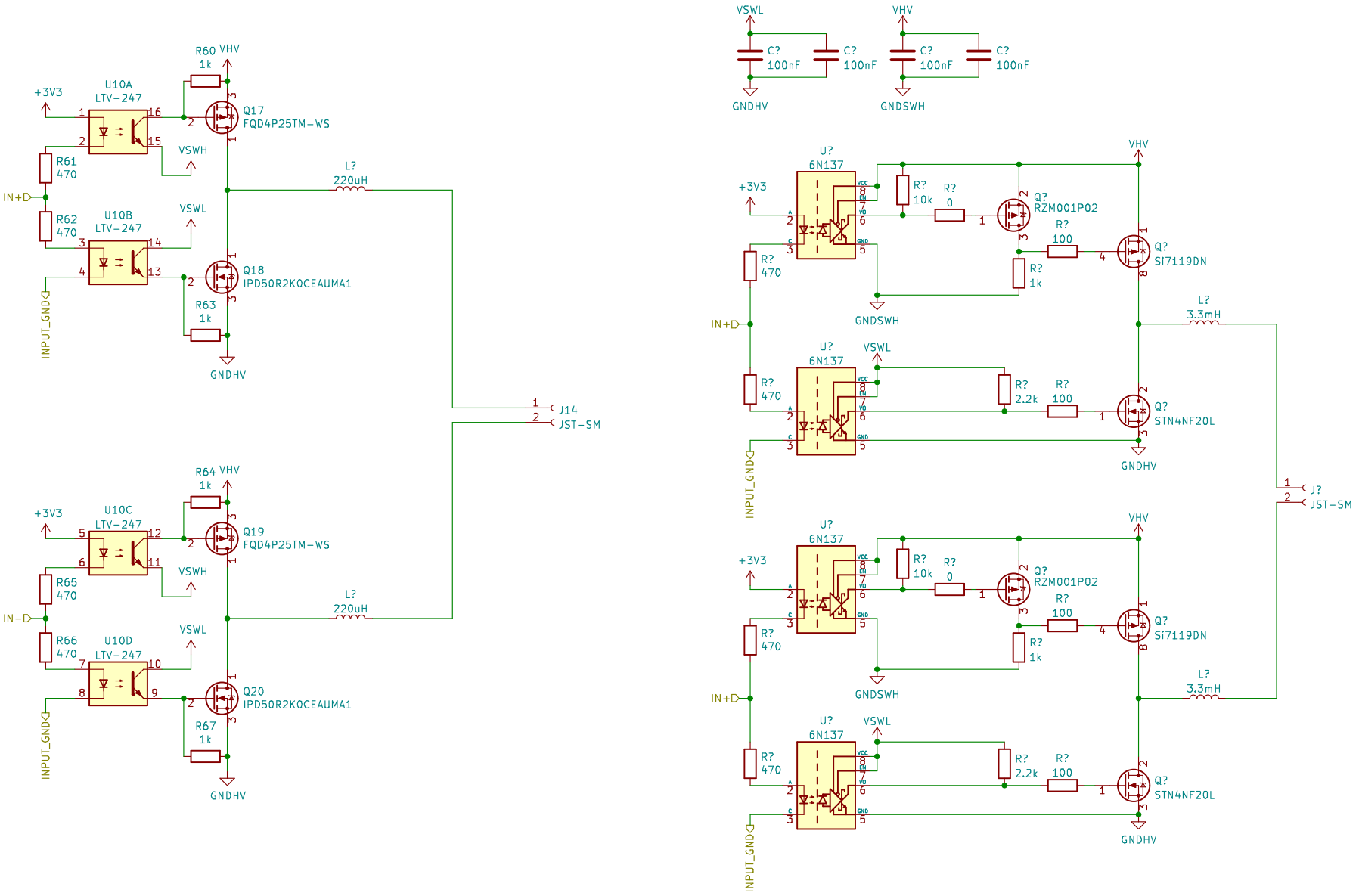
VSWL
VHV
C? 100nF
C? 100nF
C? 100nF
C? 100nF
GNDHV
GNDSWH
R60 1k
VHV
+3V3
U10A LTV-247
Q17 FQD4P25TM-WS
R61 470
VSWH
L? 220uH
IN+
R62 470
U10B LTV-247
VSWL
Q18 IPD50R2K0CEAUMA1
R63 1k
INPUT_GND
GNDHV
J14 JST-SM
R64 1k
VHV
+3V3
U10C LTV-247
Q19 FQD4P25TM-WS
R65 470
VSWH
L? 220uH
IN-
R66 470
U10D LTV-247
VSWL
Q20 IPD50R2K0CEAUMA1
R67 1k
INPUT_GND
GNDHV
U? 6N137
+3V3
R? 470
R? 10k
R? 0
Q? RZM001P02
R? 100
Q? Si7119DN
R? 1k
GNDSWH
VHV
L? 3.3mH
IN+
U? 6N137
VSWL
R? 470
R? 2.2k
R? 100
Q? STN4NF20L
GNDHV
INPUT_GND
J? JST-SM
U? 6N137
+3V3
R? 470
R? 10k
R? 0
Q? RZM001P02
R? 100
Q? Si7119DN
R? 1k
GNDSWH
VHV
L? 3.3mH
IN+
U? 6N137
VSWL
R? 470
R? 2.2k
R? 100
Q? STN4NF20L
GNDHV
INPUT_GND

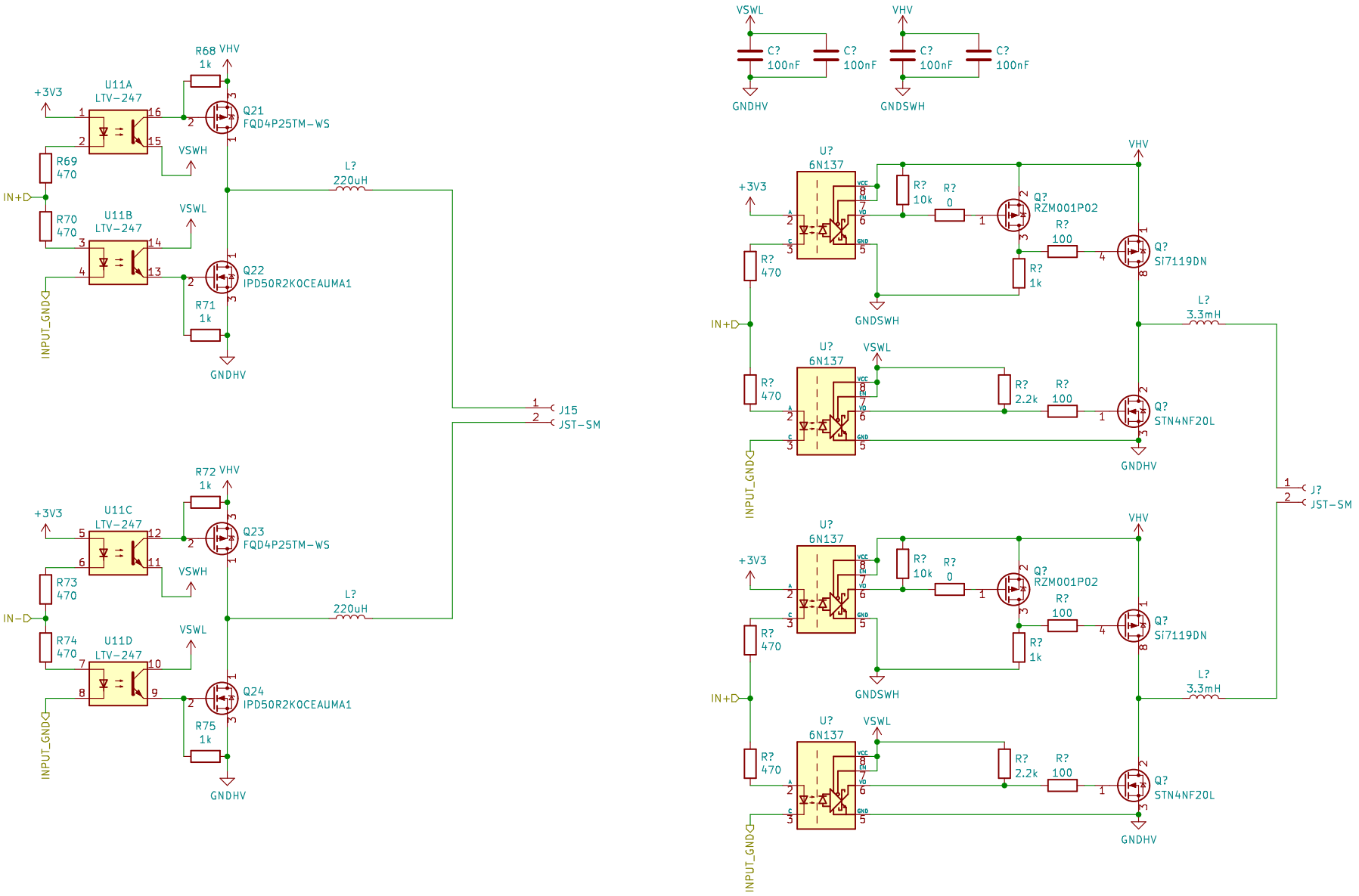
R68
1k
VHV
+3V3
U11A
LTV-247
Q21
FQD4P25TM-WS
R69
470
VSWH
L?
220uH
IN+
R70
470
U11B
LTV-247
VSWL
Q22
IPD50R2K0CEAUMA1
INPUT_GND
R71
1k
GNDHV
1
J15
2
JST-SM
R72
1k
VHV
+3V3
U11C
LTV-247
Q23
FQD4P25TM-WS
R73
470
VSWH
L?
220uH
IN-
R74
470
U11D
LTV-247
VSWL
Q24
IPD50R2K0CEAUMA1
INPUT_GND
R75
1k
GNDHV
VSWL
C?
100nF
C?
100nF
GNDHV
VHV
C?
100nF
C?
100nF
GNDSWH
U?
6N137
+3V3
R?
10k
R?
0
Q?
RZM001P02
R?
100
Q?
Si7119DN
R?
470
R?
1k
GNDSWH
L?
3.3mH
IN+
U?
6N137
VSWL
R?
2.2k
R?
100
Q?
STN4NF20L
R?
470
INPUT_GND
GNDHV
1
J?
2
JST-SM
U?
6N137
+3V3
R?
10k
R?
0
Q?
RZM001P02
R?
100
Q?
Si7119DN
R?
470
R?
1k
GNDSWH
L?
3.3mH
IN+
U?
6N137
VSWL
R?
2.2k
R?
100
Q?
STN4NF20L
R?
470
INPUT_GND
GNDHV

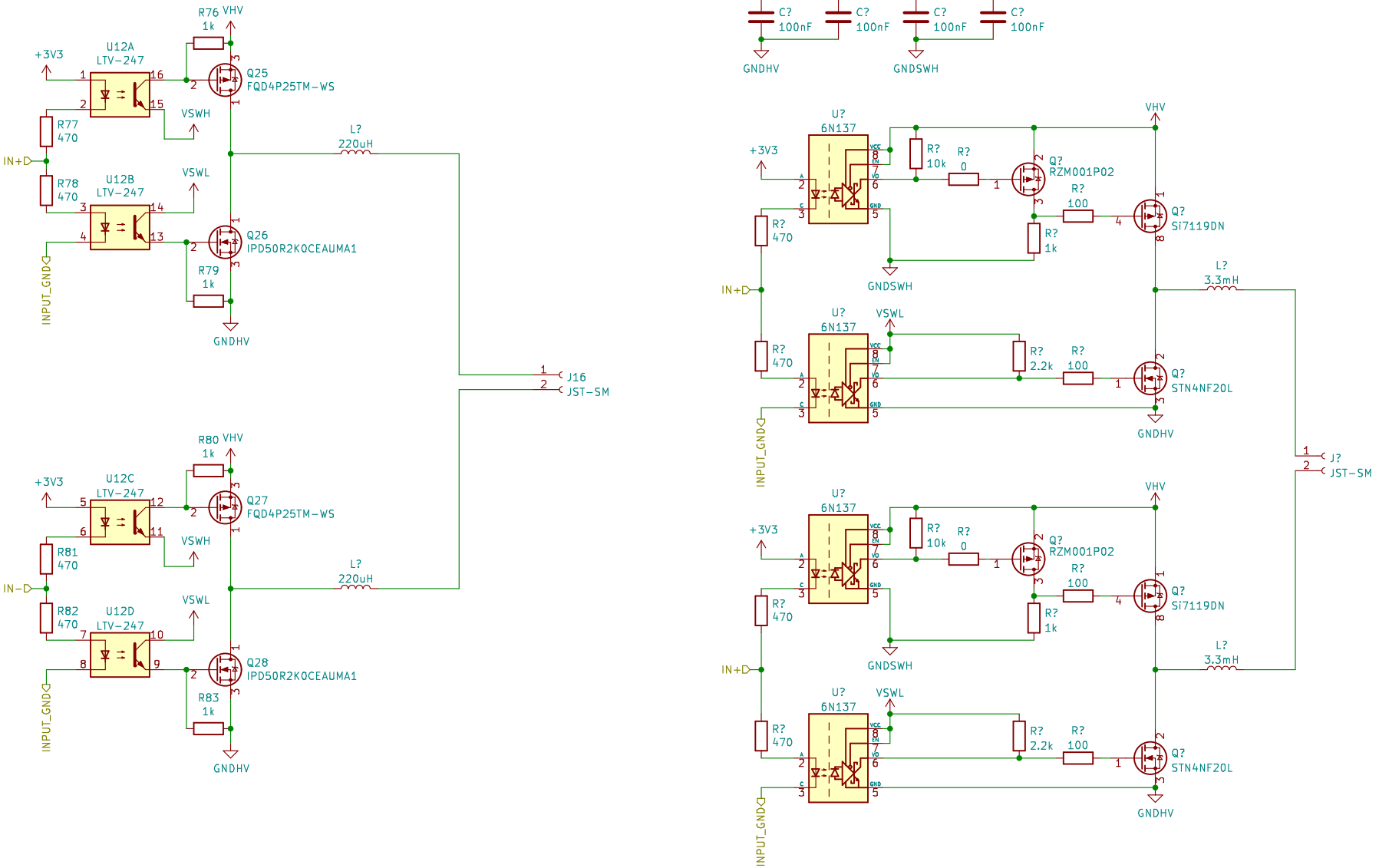
VSWL
VHV
C? 100nF
C? 100nF
C? 100nF
C? 100nF
GNDHV
GNDSWH
R76 1k
VHV
+3V3
U12A LTV-247
Q25 FQD4P25TM-WS
R77 470
VSWH
L? 220uH
IN+
R78 470
U12B LTV-247
VSWL
Q26 IPD50R2K0CEAUMA1
R79 1k
INPUT_GND
GNDHV
1 J16 2 JST-SM
R80 1k
VHV
+3V3
U12C LTV-247
Q27 FQD4P25TM-WS
R81 470
VSWH
L? 220uH
IN-
R82 470
U12D LTV-247
VSWL
Q28 IPD50R2K0CEAUMA1
R83 1k
INPUT_GND
GNDHV
U? 6N137
VHV
+3V3
R? 10k
R? 0
Q? RZM001P02
R? 100
Q? Si7119DN
R? 470
R? 1k
GNDSWH
L? 3.3mH
IN+
U? 6N137
VSWL
R? 470
R? 2.2k
R? 100
Q? STN4NF20L
INPUT_GND
GNDHV
1 J? 2 JST-SM
U? 6N137
VHV
+3V3
R? 10k
R? 0
Q? RZM001P02
R? 100
Q? Si7119DN
R? 470
R? 1k
GNDSWH
L? 3.3mH
IN+
U? 6N137
VSWL
R? 470
R? 2.2k
R? 100
Q? STN4NF20L
INPUT_GND
GNDHV

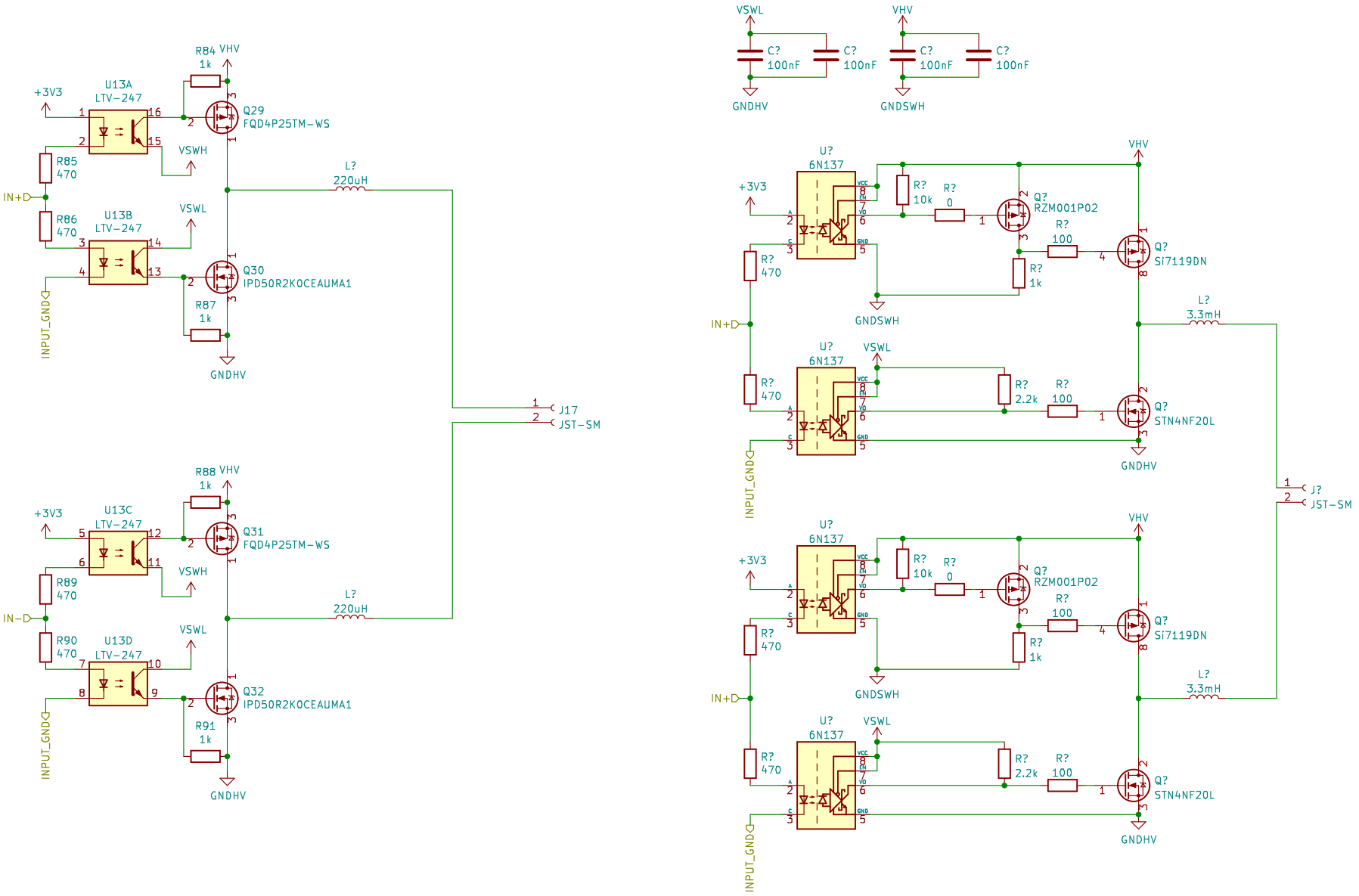
VSWL
VHV
C? 100nF
C? 100nF
C? 100nF
C? 100nF
GNDHV
GNDSWH
R84 1k
VHV
+3V3
U13A LTV-247
Q29 FQD4P25TM-WS
R85 470
VSWH
L? 220uH
IN+
R86 470
U13B LTV-247
VSWL
Q30 IPD50R2K0CEAUMA1
R87 1k
INPUT_GND
GNDHV
1 J17 2 JST-SM
R88 1k
VHV
+3V3
U13C LTV-247
Q31 FQD4P25TM-WS
R89 470
VSWH
L? 220uH
IN-
R90 470
U13D LTV-247
VSWL
Q32 IPD50R2K0CEAUMA1
R91 1k
INPUT_GND
GNDHV
U? 6N137
VHV
+3V3
R? 10k
R? 0
Q? RZM001P02
R? 100
Q? Si7119DN
R? 470
R? 1k
GNDSWH
L? 3.3mH
IN+
U? 6N137
VSWL
R? 470
R? 2.2k
R? 100
Q? STN4NF20L
INPUT_GND
GNDHV
1 J? 2 JST-SM
U? 6N137
VHV
+3V3
R? 10k
R? 0
Q? RZM001P02
R? 100
Q? Si7119DN
R? 470
R? 1k
GNDSWH
L? 3.3mH
IN+
U? 6N137
VSWL
R? 470
R? 2.2k
R? 100
Q? STN4NF20L
INPUT_GND
GNDHV

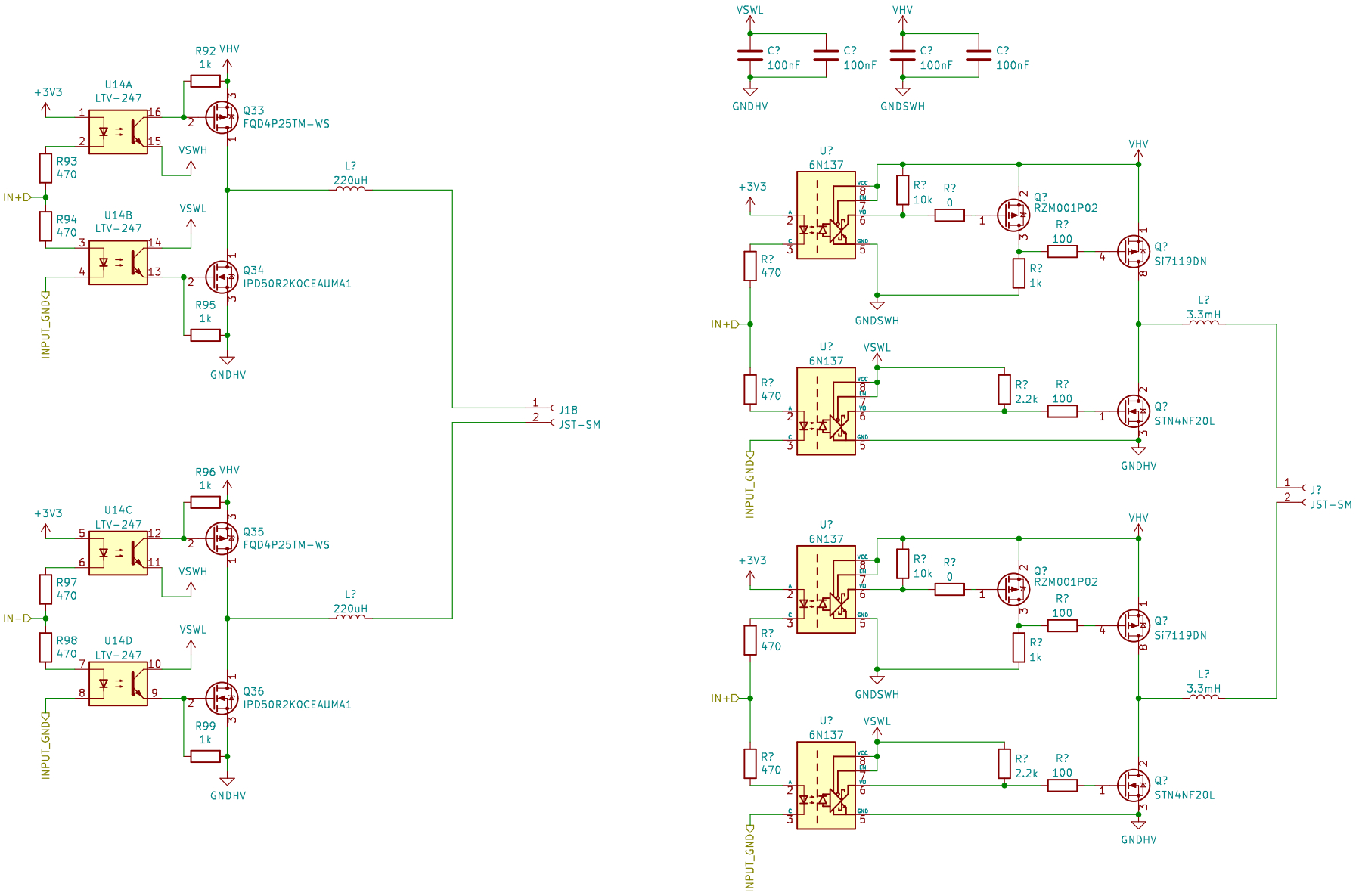
VSWL
VHV
C? 100nF
C? 100nF
C? 100nF
C? 100nF
GNDHV
GNDSWH
U14A LTV-247
U14B LTV-247
U14C LTV-247
U14D LTV-247
+3V3
IN+
IN-
INPUT_GND
R92 1k
R93 470
R94 470
R95 1k
R96 1k
R97 470
R98 470
R99 1k
VSWH
VSWL
Q33 FQD4P25TM-WS
Q34 IPD50R2K0CEAUMA1
Q35 FQD4P25TM-WS
Q36 IPD50R2K0CEAUMA1
L? 220uH
J18 JST-SM
U? 6N137
R? 10k
R? 0
R? 470
R? 100
R? 1k
R? 2.2k
Q? RZM001P02
Q? Si7119DN
Q? STN4NF20L
L? 3.3mH
J? JST-SM