REV	DESCRIPTION	ECO	DATE	DRAWN	APPD
A	PRELIMINARY RELEASE		01/12/15	RB	
B	UPDATED CONTACTS		02/18/15	CSG	
C	ADDED BTM GROUND RAILS		02/19/15	CSG	
D	ADDED TOP GND RAILS AND CHG'D BTM GND RAILS		02/24/15	CSG	
E	INCREASED CONTACTS TO 3.0 REDUCED ENGAGEMENT TO 6.0		05/28/15	CSG	
F	UPDATED PAD DIM FROM 1.6 TO 2.1		09/21/15	CSG	
G	BOTTOM COMPONENT PLACEMENT AREA 33.5 WAS 38.5		16-MAR-16	LK	CSG

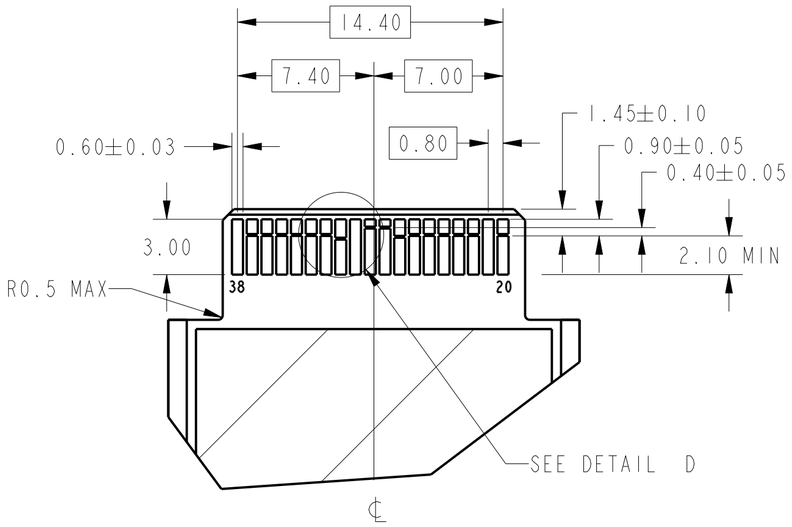

DETAIL A
SCALE 4.000
TOP SIDE

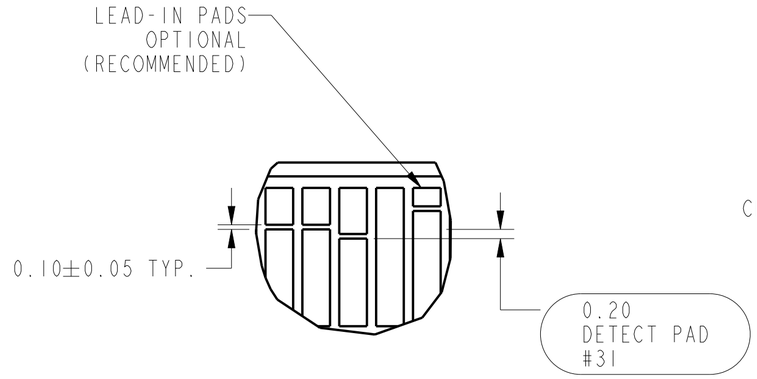

DETAIL D
SCALE 10.000

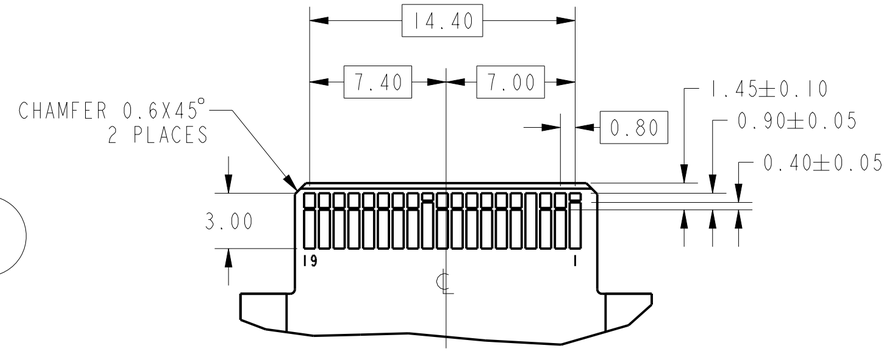

DETAIL C
SCALE 4.000
BOTTOM SIDE

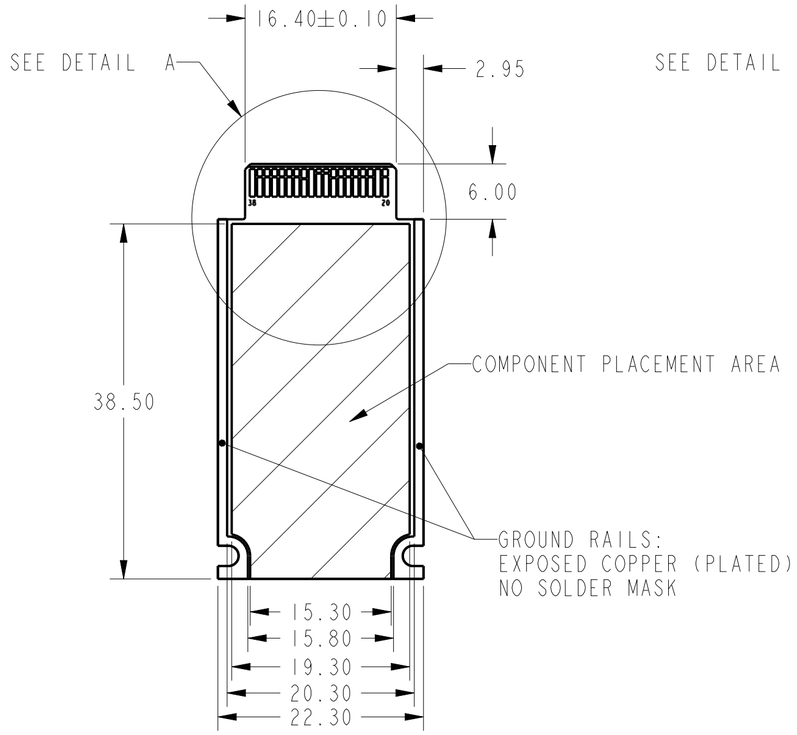

TOP SIDE

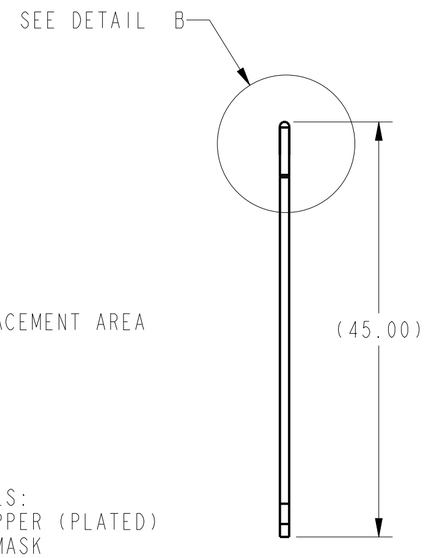

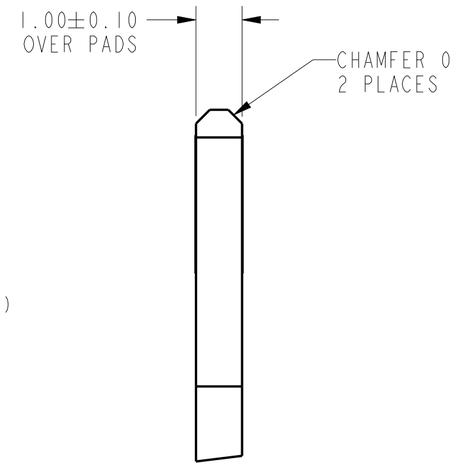

DETAIL B
SCALE 10.000

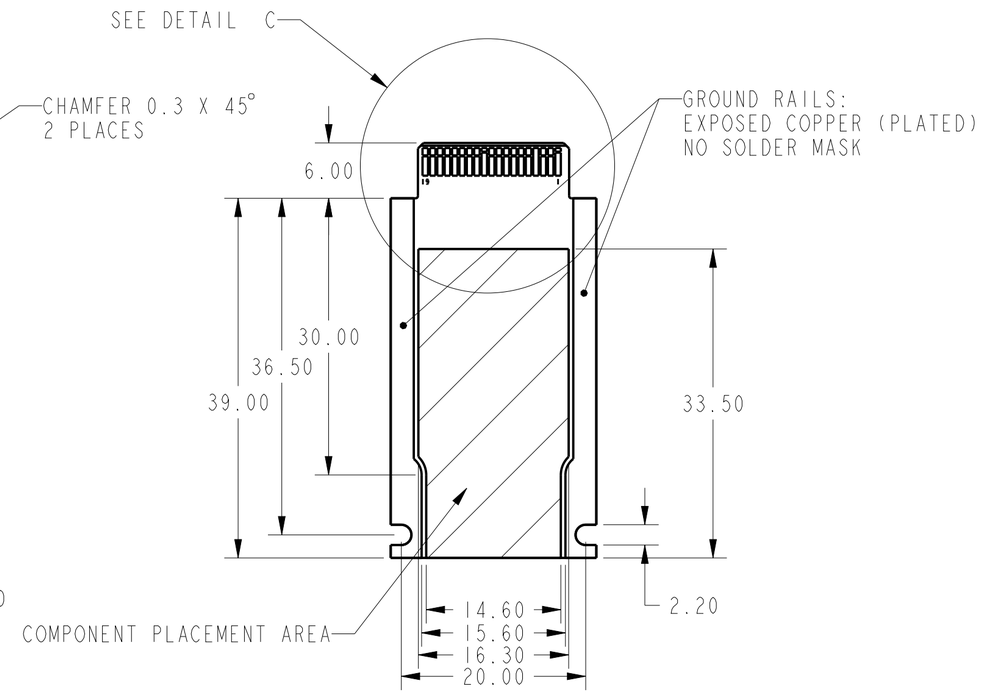

BOTTOM SIDE

UNLESS OTHERWISE NOTED, THIS DOCUMENT CONTAINS SIERRA WIRELESS CONFIDENTIAL INFORMATION. REPRODUCTION, USE, DISCLOSURE OR TRANSMITTAL OF ALL OR ANY PORTION OF THIS DOCUMENT IS PROHIBITED, EXCEPT TO THE EXTENT APPROVED BY SIERRA WIRELESS. SIERRA WIRELESS EXPRESSLY RESERVES ALL RIGHTS UNDER PATENTS, TRADEMARKS, COPYRIGHTS AND TRADE SECRETS. COPYRIGHT (C) 2016, SIERRA WIRELESS.

UNLESS OTHERWISE SPECIFIED, DIMENSIONS ARE PER THE FOLLOWING TOLERANCES:

INCHES	MM	ANGLES
.X ± .05	.X ± .25	X ±5°
.XX ± .01	.XX ± .13	X.X ±1°
.XXX ± .005	.XXX ± .05	

MATERIAL: SEE NOTES
FINISH: SEE NOTES

DO NOT SCALE PRINT

PROJECT NAME: IoT
DRWN: R.BETTS DATE: 01/12/15
DES ENGR: R.BETTS DATE: 01/12/15
CHK: - DATE: -
PRT FILENAME: IOT-PCB
DRW FILENAME: IOT_MODULE_KEEPOUT
RELEASE LEVEL: Development 2+

PART DESCRIPTION: IoT MODULE PCB

SIERRA WIRELESS
13811 Wireless Way
Richmond, British Columbia
Canada, V6V 3A4
Tel: 604.231.1100
Fax: 604.231.1109

SIZE: C | UNITS: MM | DRAWING NO.: IOT-OUTLINE | REV: G
SCALE: 2.000 | SHEET 1 OF 1