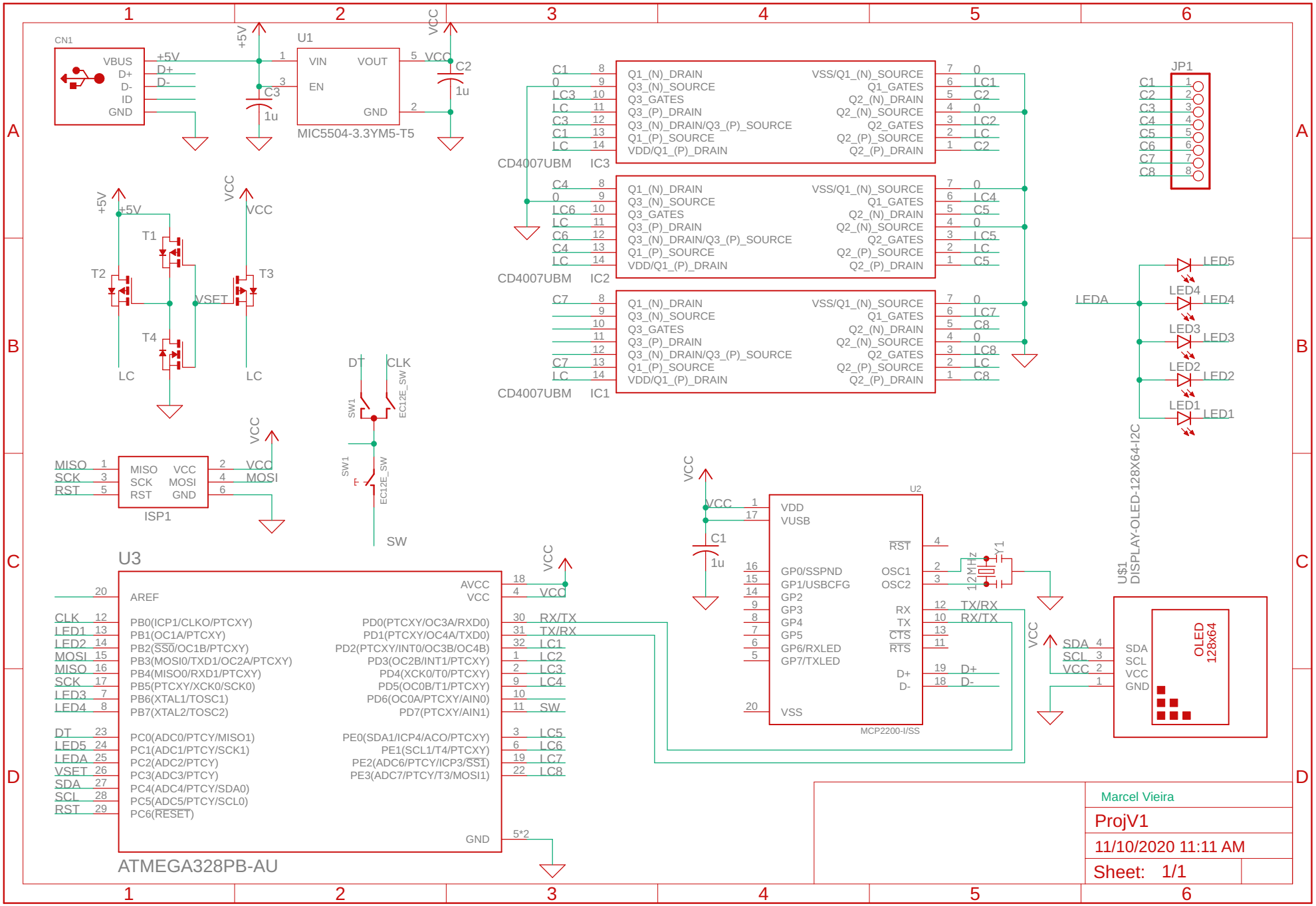

11/10/2020 11:14 AM C:\Users\pphantom\OneDrive\Umass\ECE-388 Work\Lab\ECE-388-Proj-V1\ECE-388 Pattern Gerator Git\ProjV1.sch (Sheet: 1/1)