W. E. Rodgers - Indpls.

ENGINEERING DEPARTMENT SELF WINDING CLOCK CO., INC., BROOKLYN, N.Y.	INDEX OF INSTRUCTIONS	
	Model "F"	Sheet No. 1

A. GENERAL DESCRIPTION

1. Movement
2. Winding
3. Hourly winding control
4. Winding Circuit
5. Synchronization

B. INSTALLATION

1. Unpacking (Pg. 4)
2. Suspending, Wiring & Starting
3. Maintenance of sweep seconds movement

C. ADJUSTMENTS

1. Hourly winding circuit closer
2. Adjustment of Motor Magnet and Armature
3. Adjustment of Motor Contacts
4. Adjustment of Synchronizing Levers
5. Adjustment of friction on Seconds Hand Arbor
6. Adjustment of Heavy Duty Minute Contact Fingers

D. MAINTENANCE

1. Cleaning and Oiling
2. Exchanging Movements, Packing for Return Shipment
3. Directions for setting up turns on mainspring

ENGINEERING DEPARTMENT SELF WINDING CLOCK CO., INC., BROOKLYN, N.Y.	INSTRUCTIONS	
	Model "F"	Sheet No.A-1

SUBJECT: General Description - Movement Parts

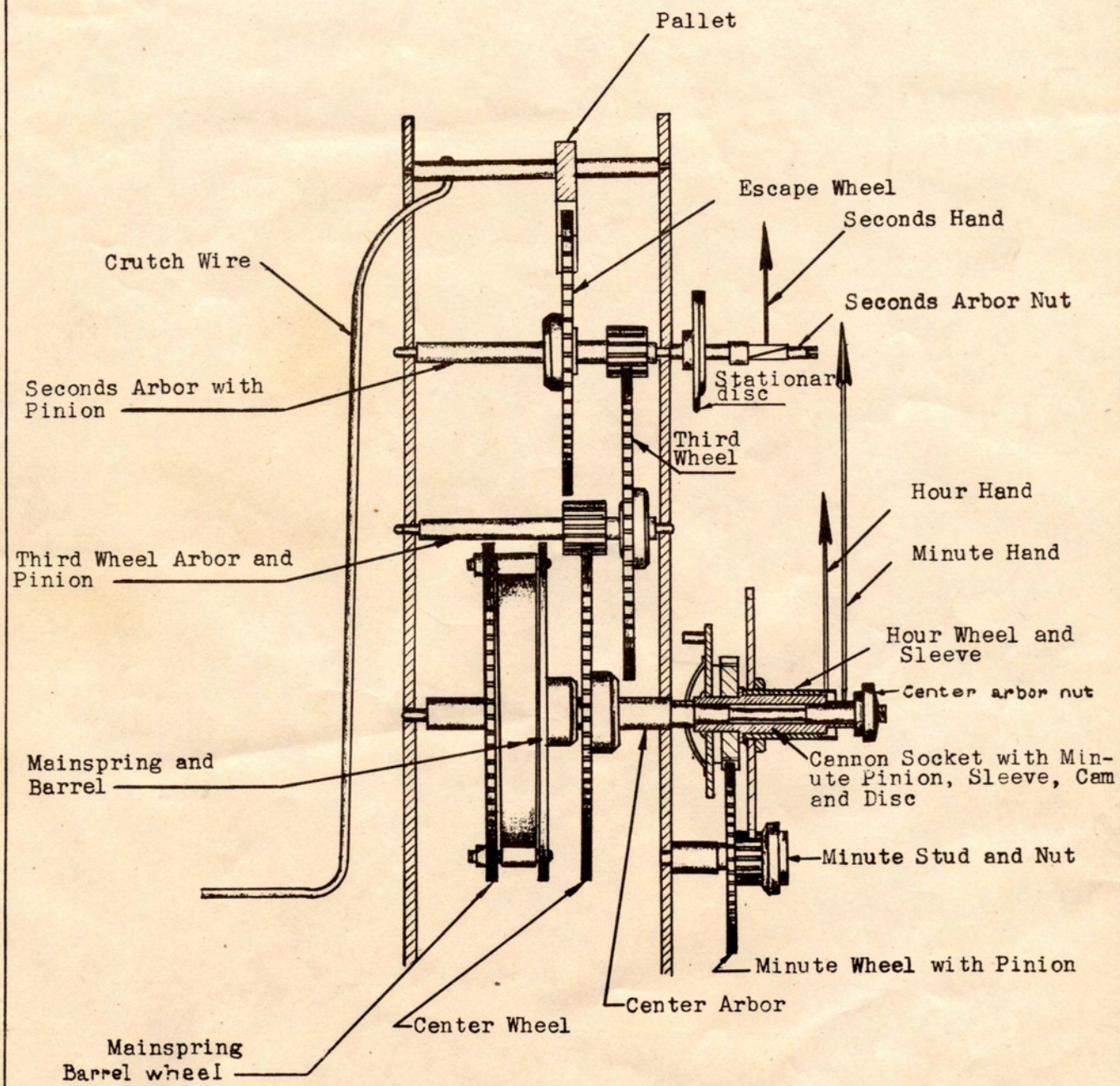

Prep. by: H. Maerz	Appr. by:	Issued: May 17, 1945	Supers.:

ENGINEERING DEPARTMENT SELF WINDING CLOCK COMPANY, INC., BROOKLYN, N.Y.	INSTRUCTIONS Model "F" Sheet No. A-2

SUBJECT: General Description - Winding

Whenever "Winding Magnet" circuit is closed, "Armature" vibrates same way as the hammer of an ordinary electric bell.

"Winding Lever" oscillates; "Pawl" turns "Ratchet Wheel", "Pinion" drives "Winding Gear" which winds up "Mainspring"

Start of

first turn of spring must be outside Pin "A"
All turns of spring must be inside Studs "B"

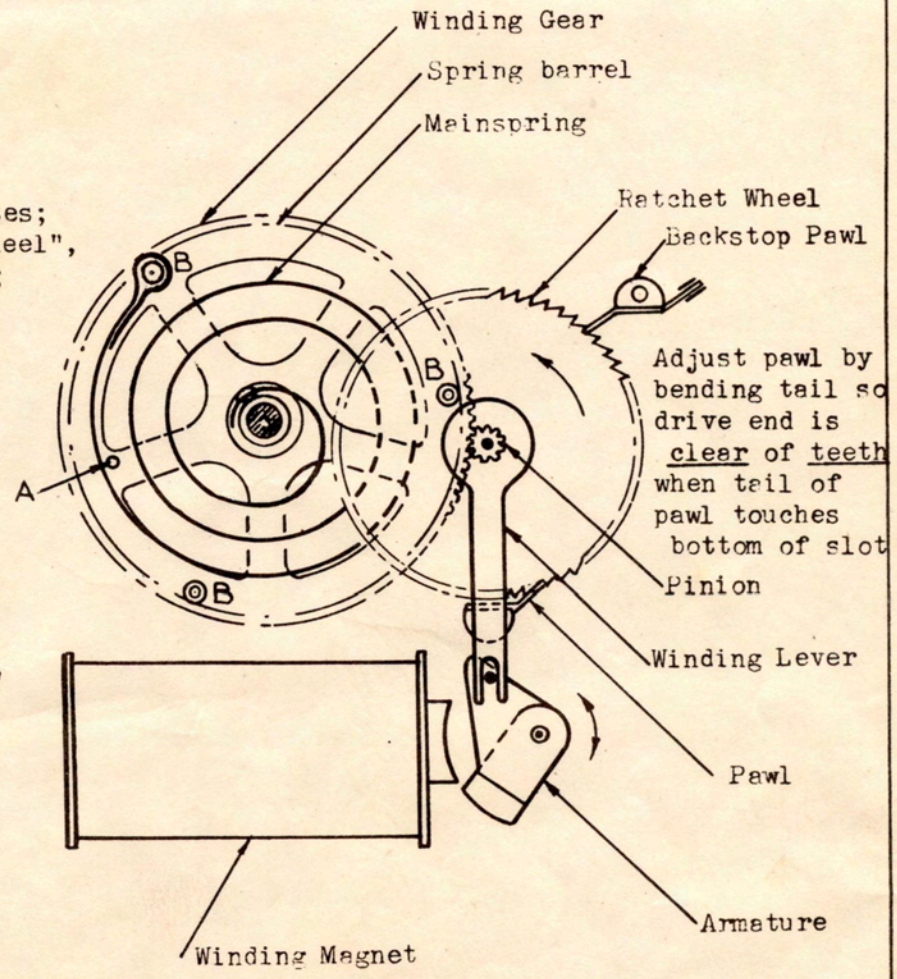

Prep. by: H. Maers	Appr. by:	Issued: May 17, 1945	Supers.:

ENGINEERING DEPARTMENT SELF WINDING CLOCK COMPANY, INC., BROOKLYN, N.Y.	INSTRUCTIONS	
	MODEL "F"	Sheet No. A3

SUBJECT: General Description - Hourly Winding Control

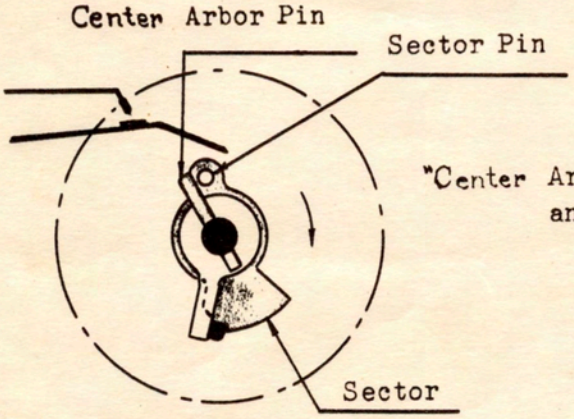

"Center Arbor Pin" engages "Sector Pin" and drives "Sector" to

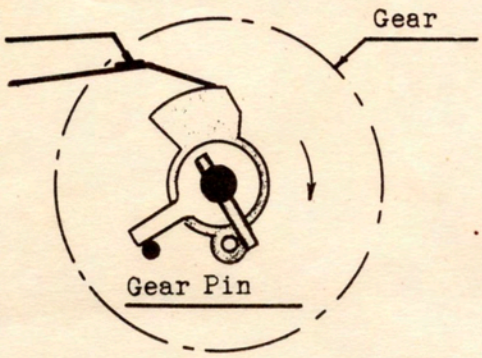

"Contact - On" Position.

Winding motor drives "Gear" (Winding Mainspring). "Mainspring Barrel Wheel Pin" engages "Knockaway-Piece"

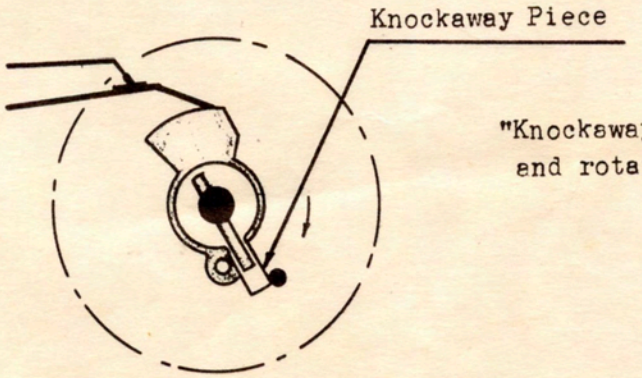

"Knockaway Piece" reaches "Sector Pin" and rotates Sector to

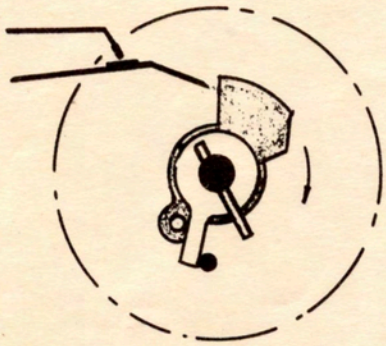

"Contact - Off" Position.

Winding motor stops; "Gear" rests; "Center Arbor Pin" revolves; engages "Sector Pin" again; Etc.

Prep. by: H. Maerz	Appr. by:	Issued: May 17, 1945	Supers.:

ENGINEERING DEPARTMENT Self Winding Clock Co., Inc., Brooklyn, N.Y.	INSTRUCTIONS	
	MODEL "F"	Sheet No. A-4

SUBJECT: General Description - Winding Circuit

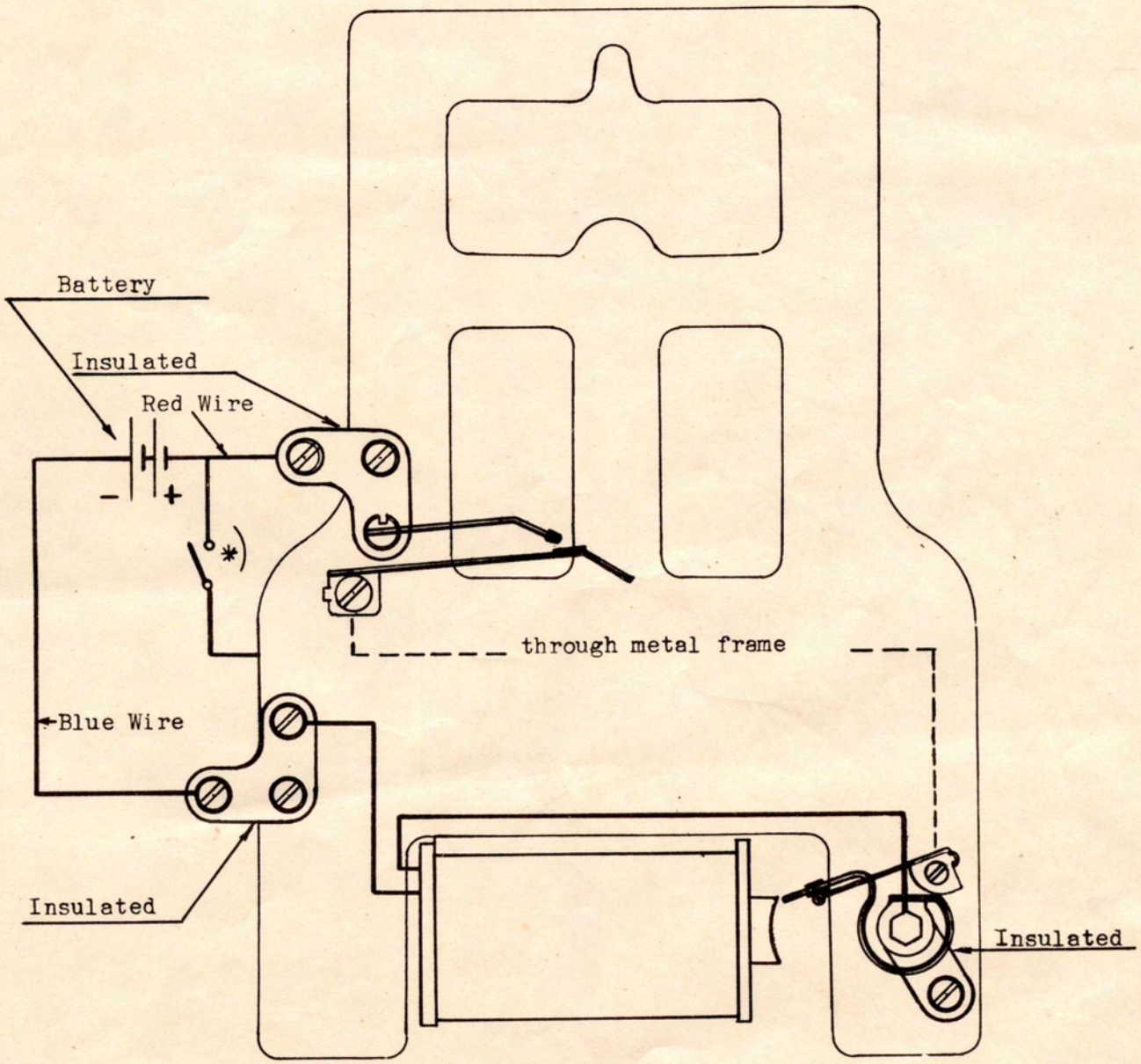

*) Key for starting winding motor by hand.

Prep. by: H. Maerz	Appr. by:	Issued: May, 1945	Supers.:

ENGINEERING DEPARTMENT SELF WINDING CLOCK COMPANY, INC., BROOKLYN, N.Y.	INSTRUCTIONS	
	Model "F"	Sheet No. A-5

SUBJECT: General Description - Synchronizing

Synchronizing Magnet De-energized

Connecting Piece (E) connects Armature (B) with Lever Arm (F) which is placed on Stud (G).

Minute Synchronizing Arm (D) is locked on Pin (S) of Sync. Latch (Y) at all times except during synchronizing periods.

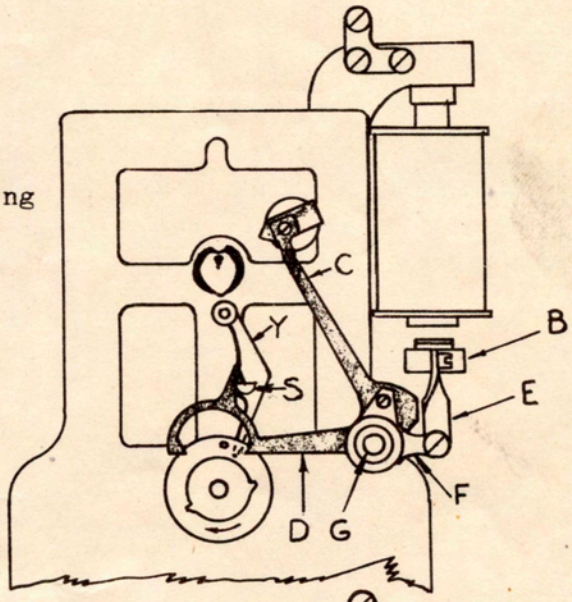

"SYNCHRONIZING" Magnet Energized

Cannon Socket Pin (U) has moved Sync. Latch Pin (S), thereby unlocking Arm (D). Magnet (A) pulls up Armature (B), which in turn pulls Levers (C) and (D) into synchronizing position.

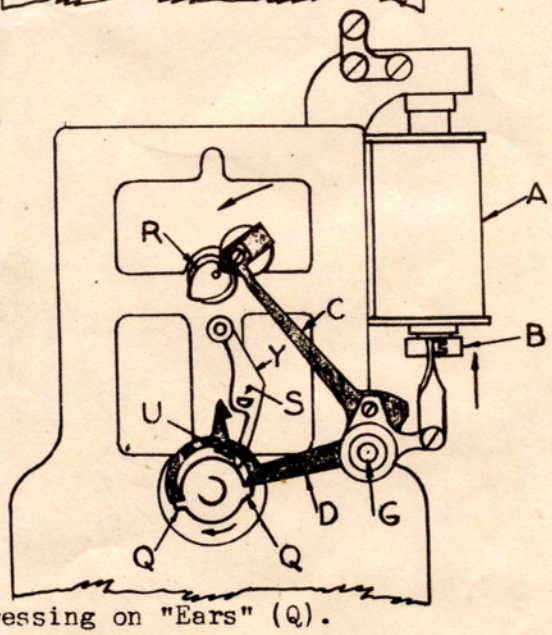

Lever (D) synchronizes Minute Hand, pressing on "Ears" (Q).

Lever (C) synchronizes Second Hand, turning "Heart-Shaped Cam"(R) to zero position.

Prep. by: H. Maerz	Appr. by:	Issued: May 17, 1945	Supers.:

INSTRUCTIONS FOR INSTALLING SELF WINDING CLOCKS

Styles 25, 37, 42 and 43 — 11" and 15" dials — metal cases and metal backs

Styles 27, 28 and 35 — 10" and 12" dials — wood cases and metal backs.

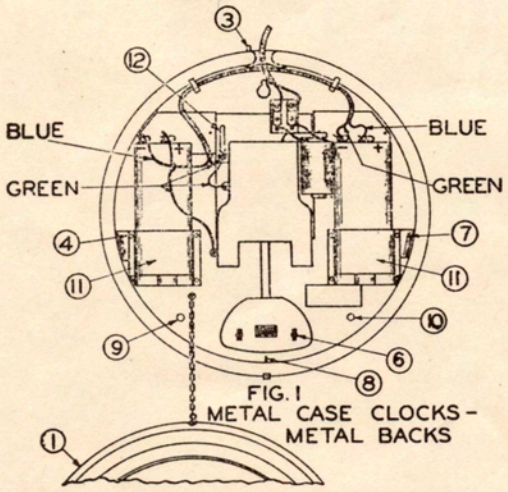

FIG. 1
METAL CASE CLOCKS - METAL BACKS

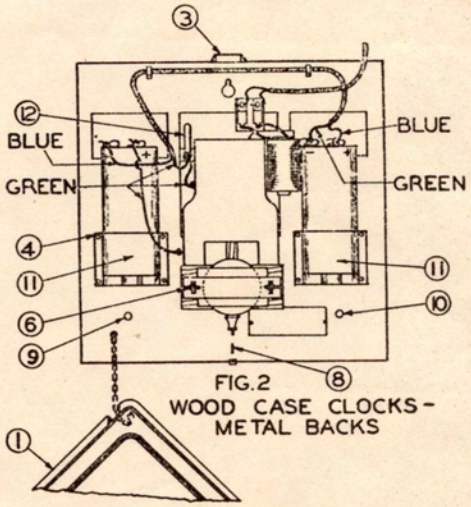

FIG. 2
WOOD CASE CLOCKS - METAL BACKS

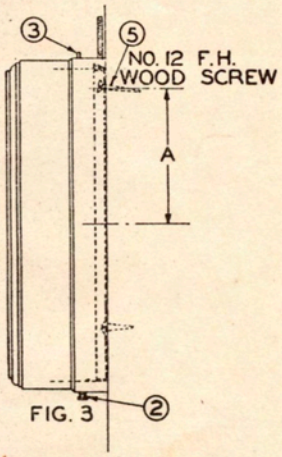

FIG. 3

These clocks should be mounted on rigid vertical walls. To install, proceed as follows:

1. Remove case front from metal back. Front (1) can be removed by loosening knurled screw (2) at bottom and lifting case off of pin or lip (3) at top. Remove straight out to prevent bending dial.
2. Screws for mounting clock on wall will be found fastened to left hand battery shelf at (4). Insert the large mounting screw (5) in wall with head pointing up. Locate screw directly above point where dial center is desired. Distance between dial center and mounting screw (Dimension A Fig. 3) can be ascertained from table below.

STYLE OF CLOCK		DISTANCE DIAL CENTER TO CENTER OF MOUNTING SCREW
Nos. 25, 37, 42, 43	— 11" dial	6"
" 25, 37	— 15" dial	8-5/16"
" 27, 28, 35	— 10" dial	5-5/8"
" 27	— 12" dial	5-5/8"
" 28, 35	— 12" dial	5-7/8"

3. Hang metal back on mounting screw and unfasten screws or wood block (6) holding pendulum. (Where pendulum is held by screws only, save blocking screws and wing nuts in loops (7) as directed) (Where wood blocks are used, set aside for future return shipment)
4. Plumb metal back on wall by shifting slightly until tip of pendulum rod lines up with index mark (8) on back. Be sure pendulum swings freely.
5. Insert two side steady screws in holes (9 & 10). Do not use nails for this fastening. If necessary to remove case for drilling holes for steady screws, reblock pendulum to avoid buckling suspension spring.
6. When case is firmly fastened to wall, insert two dry cells in metal holders (11). Connect wiring harness and pull time service wires through hole or groove at top of back for connection to Fahnstock connectors.
7. Wind clock movement by pressing key (12) at left hand side of movement plate for about ten seconds.
8. Start pendulum and set hands on time.
9. Reinstall case front. Top of case should catch on pin or lip at top of metal back. When case front is secure at top, push in lower part and turn up knurled screw at bottom, finger tight.

CAUTION: *Be sure case front is securely fastened to back so that it cannot fall off and result in injury or damage. Chain with hook is provided on each back to hold case front when removed for repair. Hook to battery holders (11) when not in use.*

IMPORTANT: *Before leaving premises, instruct subscriber how to remove case front and how to make Daylight Saving Time changes. Caution him never to turn hands backward and to make sure front is always refastened to metal back.*

SELF WINDING CLOCK COMPANY, INC.
NEW YORK

FORM 122B-3M-6-43

INSTRUCTIONS

FOR INSTALLATION AND MAINTENANCE OF SWEEP SECONDS CLOCKS

STANDARD CLOCK
HANG IN THE USUAL MANNER

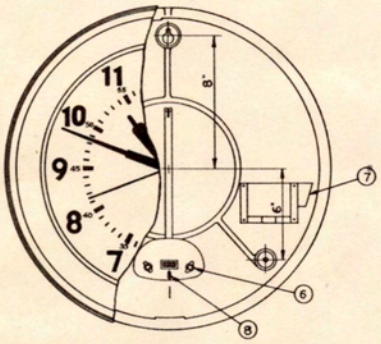

FIG. 1 - INSTALLATION

REMOVE PENDULUM BLOCKING SCREWS WITH WING NUTS ⑥ AND STORE IN LOOP ⑦ FOR USE WHEN RETURNING CLOCK. BEFORE FASTENING TO WALL, PLUMB METAL BACK WITH PENDULUM AT REST. PLUMB SO THAT RAISED CENTER LINE ⑧ ON PENDULUM, IS DIRECTLY IN LINE WITH MARK ON BACK. NOTE THAT CLOCK BEATS EVENLY. ALWAYS FASTEN PENDULUM TO METAL BACK BEFORE REMOVING CLOCK FROM WALL.

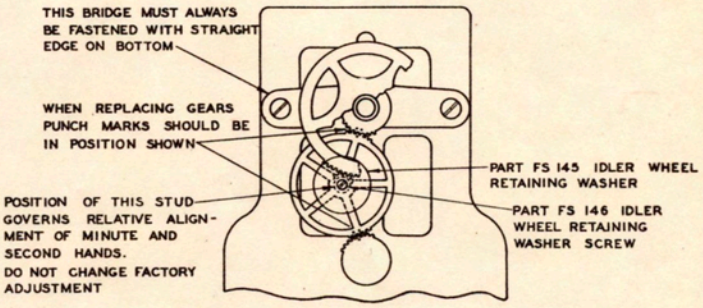

FIG. 2
DIAL TRAIN GEARING - SHOWING CORRECT RELATION OF TEETH

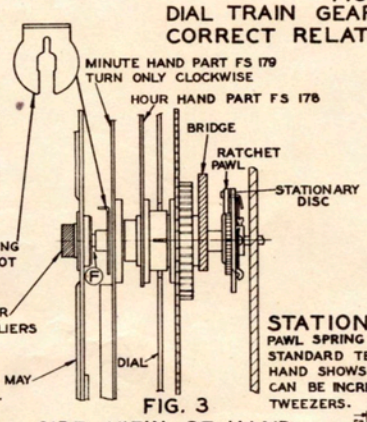

(PART FS 172) MINUTE HAND RETAINING CLIP INSERT WITH FINGERS DO NOT FORCE OR USE TOOL.

(PART FS 174) FRONT SECONDS ARBOR NUT MUST BE TIGHT USE CLOCK PLIERS DO NOT FORCE.

(PART FS 180) SWEEP SECONDS HAND MAY BE TURNED IN EITHER DIRECTION.

NOTE SPECIAL SHAPED HOLE IN SOCKET. SECONDS HAND CAN FIT ONLY ONE WAY. TO REMOVE, INSERT CLOCK SCREW-DRIVER AT POINT Ⓕ AND TURN SLIGHTLY.

FIG. 3
SIDE VIEW OF HAND ARBOR AND RATCHET ASSEMBLY

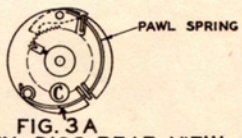

FIG. 3 A
STATIONARY DISC REAR VIEW

PAWL SPRING IS PERMANENTLY ADJUSTED TO STANDARD TENSION AT FACTORY. IF SECOND HAND SHOWS TENDENCY TO SLIP, TENSION OF SPRING CAN BE INCREASED BY PRESSING ON SPRING AT Ⓒ USE TWEEZERS.

SWEEP SECONDS PARTS THAT MAY BE ORDERED FROM FACTORY

- FS 145 IDLER WHEEL RETAINING WASHER
- FS 146 " " " " SCREW
- FS 172 MINUTE HAND " CLIP
- FS 174 FRONT SECONDS ARBOR NUT
- FS 180 SWEEP SECONDS HAND ASSEMBLY

OTHER MOV'T. PARTS EXCEPT SWEEP SECONDS PARTS AS LISTED ON W.U.T CO. STENCIL 1853 B

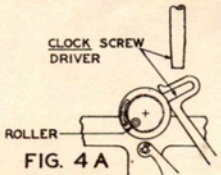

FIG. 4 A
TYPE A SYNCHRONIZING LEVER FORK
(EARLY MODEL SWEEP SECONDS CLOCKS)

IF FORK STICKS WHEN CLOCK IS SYNCHRONIZED INCREASE CLEARANCE BETWEEN FORK AND ROLLER BY INSERTING CLOCK SCREW-DRIVER AT POINT INDICATED BY ARROW AND TURNING SLIGHTLY.

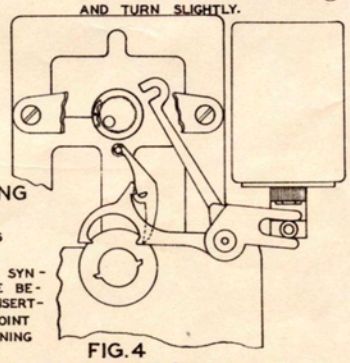

FIG. 4
TYPE B SYNCHRONIZING LEVER IN NORMAL POSITION (PRESENT SWEEP SECONDS CLOCKS)
LATCH RELEASED READY FOR SYNCHRONIZING.

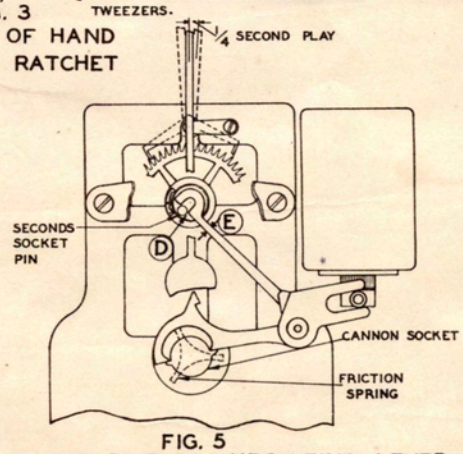

FIG. 5
TYPE B SYNCHRONIZING LEVER IN SYNCHRONIZED POSITION
(PRESENT SWEEP SECONDS CLOCKS)

NOTE NECESSARY CLEARANCE BETWEEN SECONDS SOCKET PIN AND SYNCHRONIZING FORK AT Ⓓ. WITH SYNCHRONIZING LEVER HELD CLOSED, SECOND HAND SHOULD HAVE 1/4 SECOND PLAY ±. IF HAND HAS NO PLAY, PLACE PLIERS AT POINT Ⓔ AND ADJUST FORK SLIGHTLY UPWARD, UNTIL 1/4 SECOND PLAY IS OBSERVED.

SELF WINDING CLOCK COMPANY, INC.
NEW YORK

ENGINEERING DEPARTMENT SELF WINDING CLOCK CO., INC., BROOKLYN, N.Y.	INSTRUCTIONS	
	Model "F"	Sheet No. C1

SUJECT: Adjustment of Hourly Winding Circuit Closer

OPEN

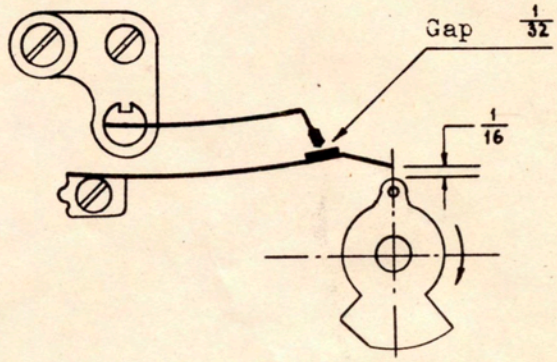

CLOSING

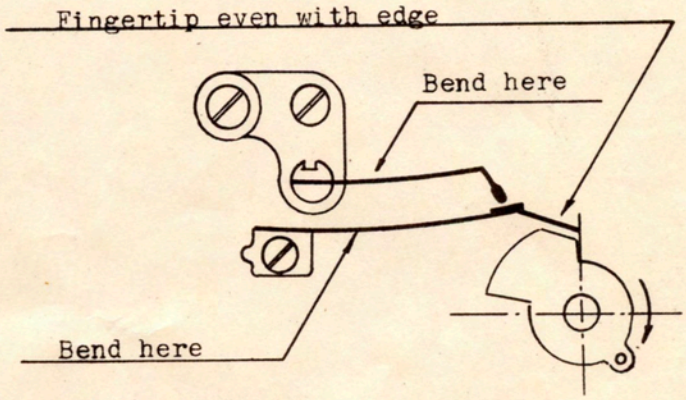

CLOSED

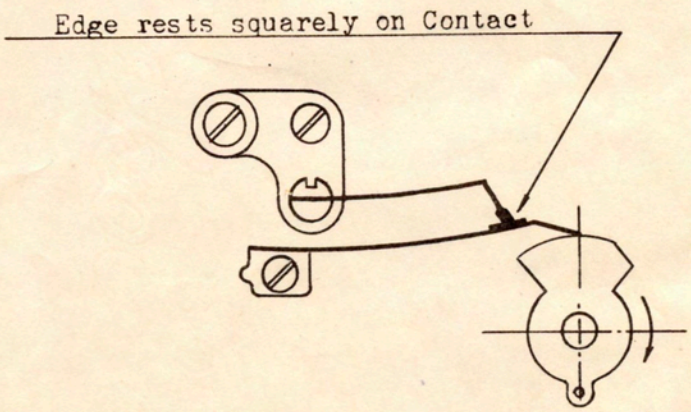

BEND SPRING AS SHOWN. (Exaggerated)

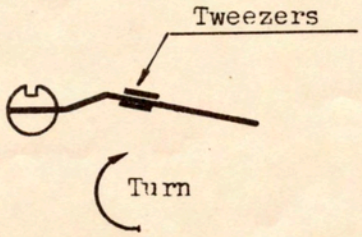

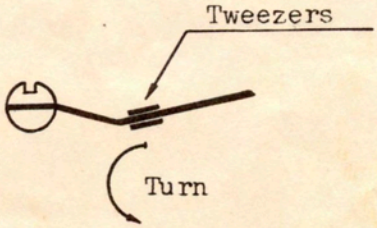

Prep. by: H. Maerz	Appr. by:	Issued: May 14, 1945	Supers.:

ENGINEERING DEPARTMENT SELF WINDING CLOCK CO., INC., BROOKLYN, N.Y.	INSTRUCTIONS	
	Model "F"	Sheet No.C2

SUBJECT: Adjustment of Armature

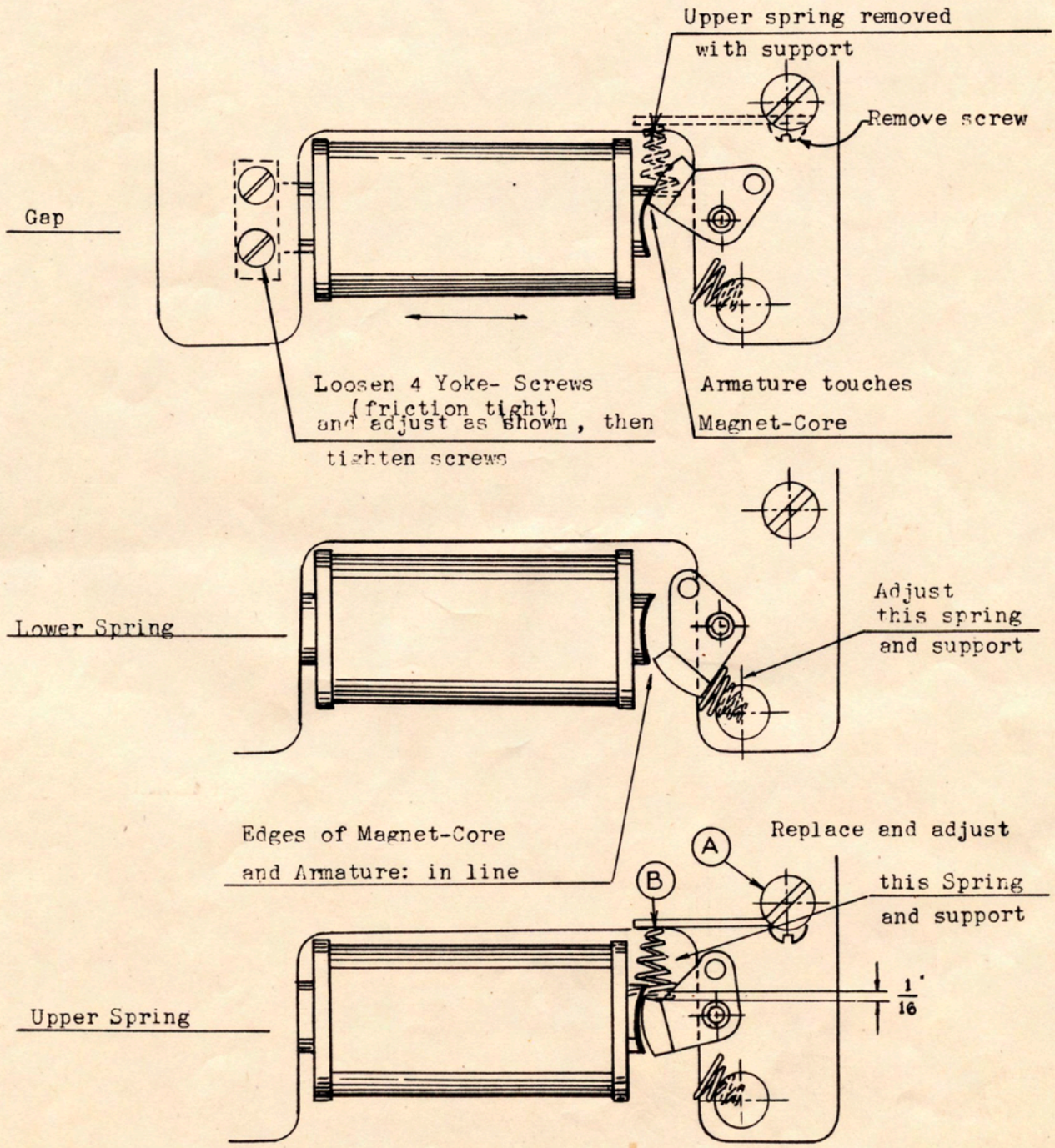

NOTE: To adjust upper spring, loosen screws "A" (friction tight), front and rear plates and set support up or down. Tighten screws "A" front and rear. Loosen screw "B" and turn spring so end of same is flat against armature.

To adjust lower spring, remove same and compress with pliers if too long.

Prep. by: H. Maerz	Appr. by:	Issued: May 14, 1945	Supers.:

If too short, grip last turn with pliers and pull out.

ENGINEERING DEPARTMENT SELF WINDING CLOCK CO., INC., BROOKLYN, N.Y.	INSTRUCTIONS	
	Model "F"	Sheet No. C 3

SUBJECT: ADJUSTMENT OF MOTOR CONTACTS

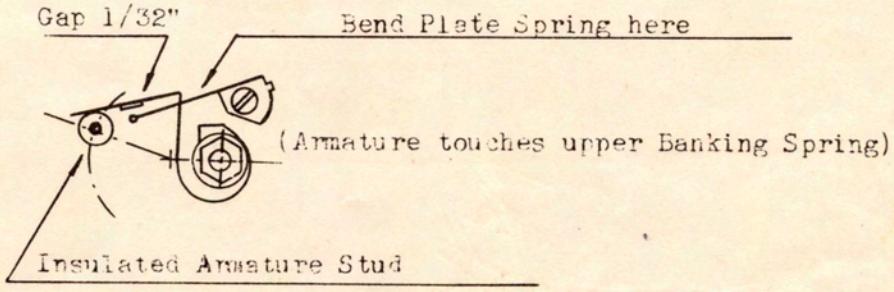

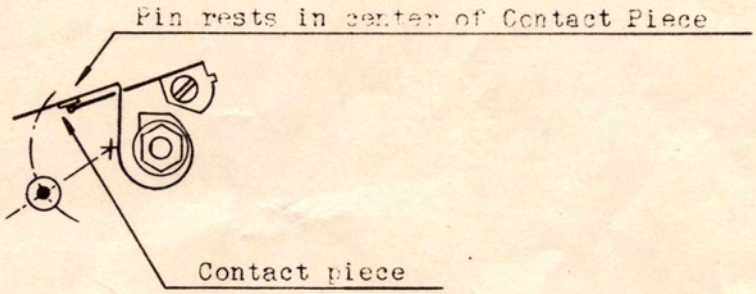

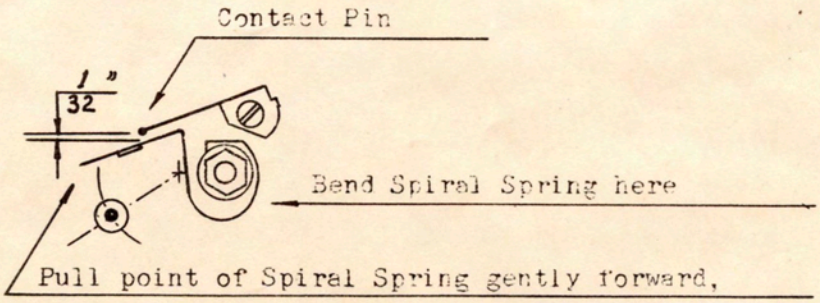

(using light pair of tweezers) and let it drop under Contact Pin - adjust - and restore spring to original position.

Check Springs on both sides of Contact over full width and for appr. simultaneous "Break" and "Make".

ENGINEERING DEPARTMENT SELF WINDING CLOCK CO., INC., BROOKLYN, N.Y.	INSTRUCTIONS	
	Model "F"	Sheet No. C4

SUBJECT: ADJUSTMENT OF SYNCHRONIZING MECHANISM

Press firmly as shown

Check:

1. No play at 1 and 2 Front Magnet
2. Appr. 9/1000" gap at 2 Rear Magnet
3. ± "2 Seconds" play at 3

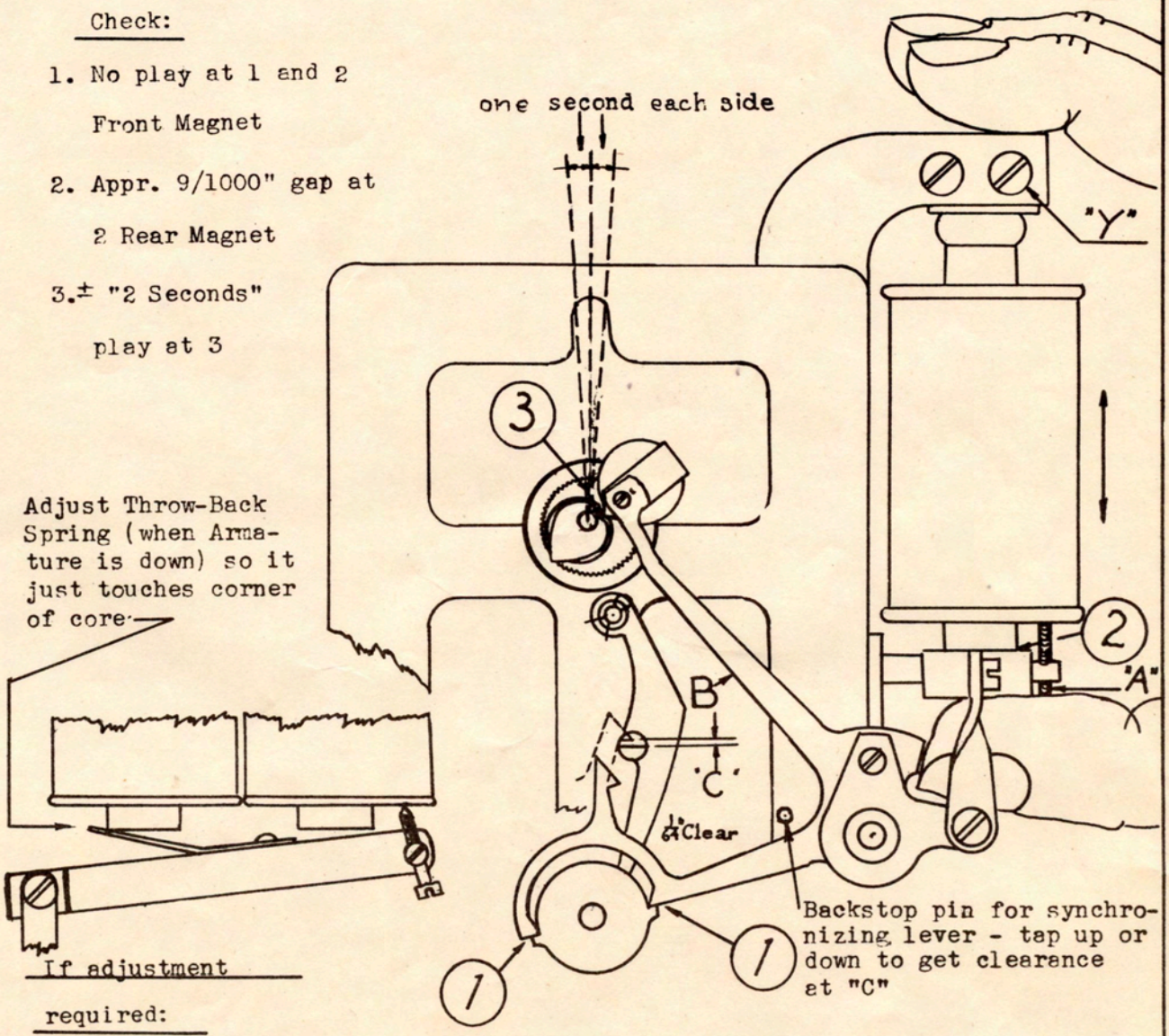

If adjustment required:

1. Loosen 4 Yoke Screws "Y" and Screw "A"; adjust Magnet; tighten 4 Screws "Y"
2. Tighten Screw "A" until gap 9/1000" (Appr. 3 layers of newspaper) under Rear Magnet.
3. Bend Synchronizing lever at "B" for play at 3.

Prep. by: H. Maer	Appr. by:	Issued: May 17, 1945	Supers:

ENGINEERING DEPARTMENT SELF WINDING CLOCK CO., INC., BROOKLYN, N.Y.	INSTRUCTIONS	
	Model "F"	Sheet No: C5

SUBJECT: ADJUSTMENT OF "SECOND FRICTION" ON SECOND HAND ARBOR

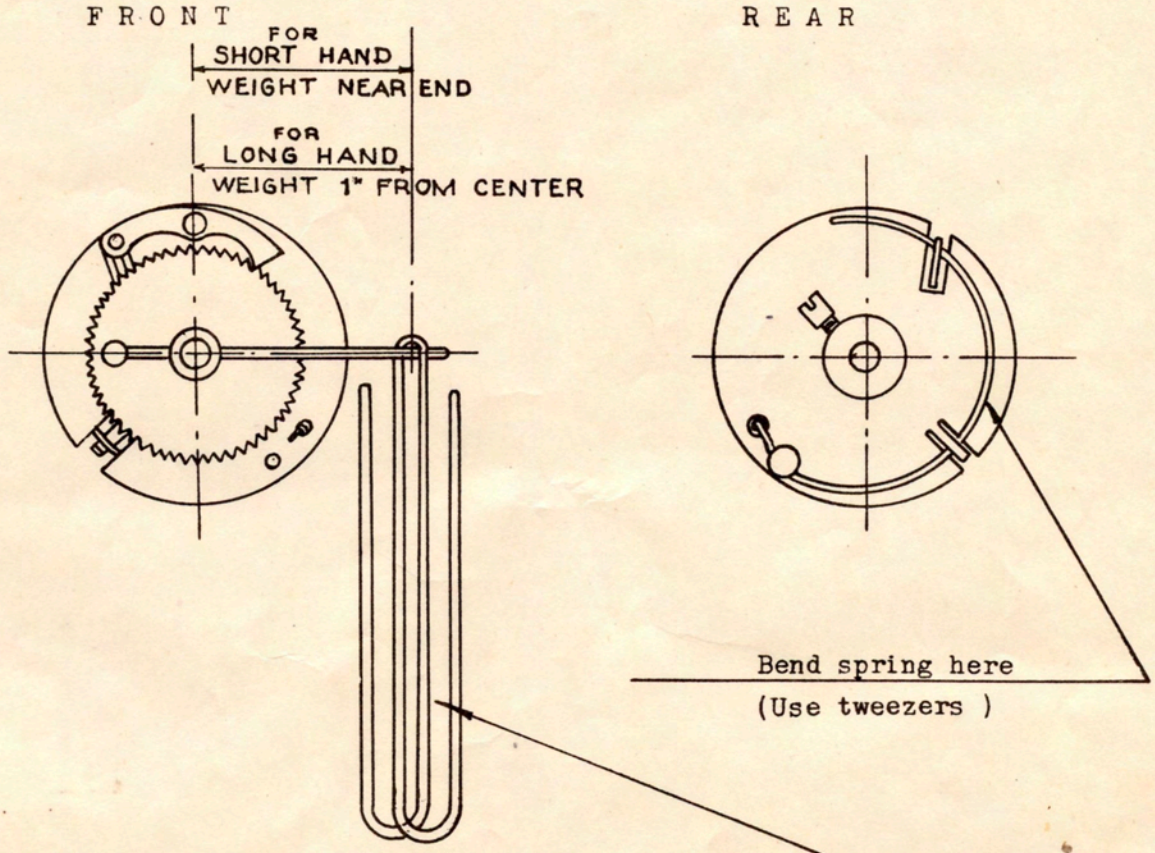

Cut #18 Copper Wire: $10\frac{3}{4}$" long;

Remove Insulation: Suspend as shown:

If weight of wire does not pull down second hand, adjust spring.

Prep. by: H. Maerz	Appr. by:	Issued: May 17, 1945	Supers.:

ENGINEERING DEPARTMENT SELF WINDING CLOCK COMPANY, INC., BROOKLYN, N.Y.	INSTRUCTIONS	
	Model "F"	Sheet No. C6

SUBJECT: ADJUSTMENT OF HEAVY DUTY MINUTE CONTACT FINGERS

(2)

Bend down slightly on springs "C"
Set banking arm in place and adjust for contact pressure

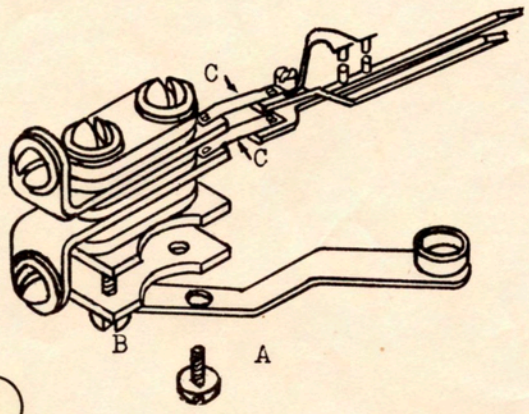

(1)

Remove screw "A"
Loosen screw "B"
Swing banking arm away from contact fingers

For same clearance on both contacts -

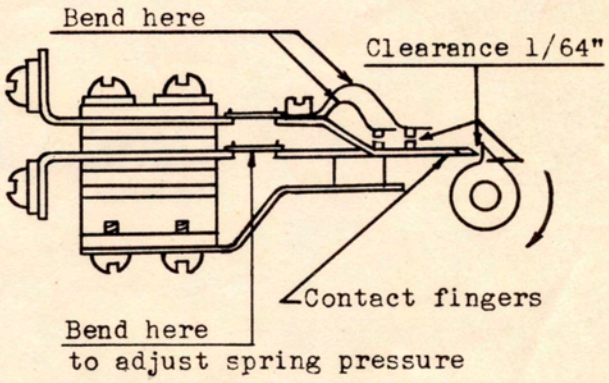

Simple spring pressure test

Cut #18 copper wire; remove insulation; form as shown:

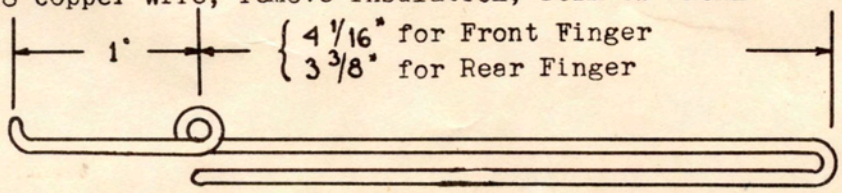

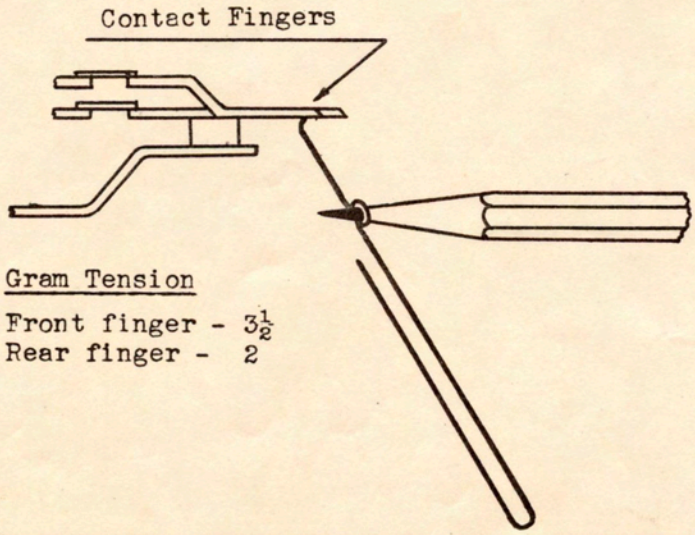

Suspend formed wire horizontally on pencil point as shown.

Short wire end should just lift contact finger.

Gram Tension

Front finger - $3\frac{1}{2}$
Rear finger - 2

Prep. by: H. Maerz	Appr. by:	Issued: May 17, 1945	Supers.:

ENGINEERING DEPARTMENT SELF WINDING CLOCK COMPANY, INC., Brooklyn, N.Y.	INSTRUCTIONS	
	MODEL "F"	Sheet No.D-1

SUBJECT: Maintenance - Cleaning and Oiling

1. REMOVE: Movement from case

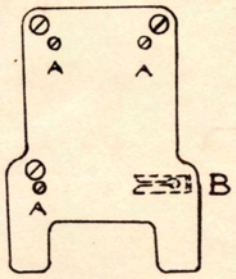

a. Hands

Unscrew knurled nut
Pry off minute hand with screw driver
Remove hour hand by grasping at center with fingers and, while pulling, turn back and forth.

Movement with sweep seconds hand: Remove small knurled nut. Insert small screw driver between clip and hand socket and pry a little at a time, turning hand to a new position at each pry. Remove clip and proceed to remove minute and hour hands as above.

b. Dial

Remove four dial screws

c. Wires

Remove winding battery leads, synchronizing circuit and any wires to contacts

d. Movement

Unscrew three bracket screws "A"
Remove bracket clamp "B"

e. Dial Train

Unscrew two knurled nuts

f. Heart-Shaped Seconds Socket

Remove contact assembly, if any
Remove small, headless screw (end of arbor)

g. Synchronizing Levers

Remove knurled nut on stud

2. BRUSH: All bearings and pivot holes. Use Pyrene or similar non-combustible cleaning fluid on stiff marking brush (spin wheels while cleaning to drive out dirt). Allow to saturate for two or three minutes.

3. WIPE: Plates and arbors (Use cheese cloth on flat wood piece)

4. OIL: All bearings and pivots (Use fine wire or heavy needle)
Use on drop on all pivots
Trace of oil on center arbor nut and pallets
Vaseline on winding lever and pin on motor armature

5. CHECK: All contacts. Must be dry and clean. Smooth out all grooves with fine emery cloth.

6. REPLACE: All parts previously removed

Prep. by: H. Maerz	Appr. by:	Issued:	Supers.:

ENGINEERING DEPARTMENT SELF WINDING CLOCK CO., INC., BROOKLYN, N.Y.	INSTRUCTIONS	
	Model "F"	Sheet No. D 2

SUBJECT: MAINTENANCE - Exchanging Movements

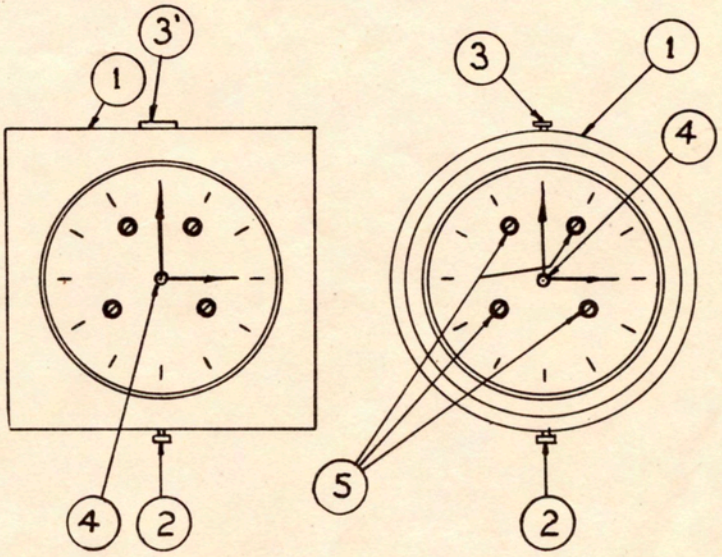

1. To remove Case Front (1)

Loosen nut (2); lift case off pin (3) on lip (3'); tilt out front bottom and move straight out to prevent bending dial.

2. To remove Hands

Unscrew knurled Nut (4) and pry off Hands with screwdriver.
Sweep Seconds Hand: Insert small screw driver between clip and hand socket and pry a little at a time, turning hand to a new position at each pry.

3. To remove Dial

Unscrew four screws (5)

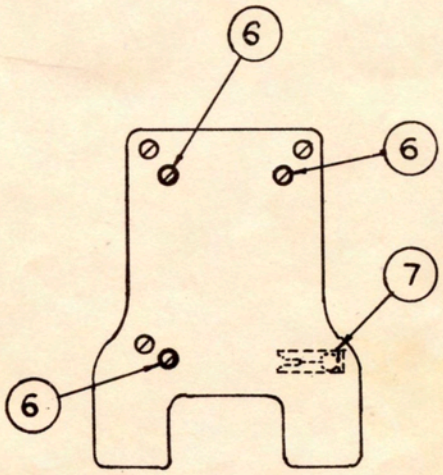

4. To remove Movement

First remove all wires
Unscrew three screws (6) and pull clamp (7) out to the right

5. Metal Property Tag

Tag must be removed with movement and returned with it

Prep. by: H. Maerz	Appr. by:	Issued: May, 1945	Supers :

ENGINEERING DEPARTMENT SELF WINDING CLOCK COMPANY, INC., BROOKLYN, N.Y.	INSTRUCTIONS	
	Model "F"	Sheet No. D3

SUBJECT: Directions for Setting Up Turns on Mainspring

1. Remove Front Plate of Movement and take out Center Arbor Assembly

2. Grasp both gears firmly with left hand and slide off "Sector" and Knockaway Piece as shown.

3. Grasp Gear (2) with right hand and let Spring unwind SLOWLY by loosening grip on Gear (1) slightly.

4. Grasp Gear (1) and turn Gear (2) counter-clockwise (facing Gear (2)) until longer end of Arbor Pin is in line with Gear Stud. Now make desired number of turns plus 1/4 turn. Insert "Knockaway Piece" and "Sector Piece" as shown.

5. Reinstall Center Arbor Assembly.

6. If new spring is installed, proceed as in paragraphs 1, 2 and 3. Then knock out arbor pin and unscrew 3 nuts to remove barrel wheel "2". Install new spring with start of first turn outside of pin "A". All turns to be inside studs "B" and "C". Be sure slot at end of spring engages pin on spring hub. Replace gear and tighten 3 nuts. Hold arbor so pin hole is vertical (spring completely unwound). Insert arbor pin from top if gear stud is to right of arbor or insert pin from bottom if gear stud is to left of arbor. Tap pin in place with long end clearing gear stud 1/32". Proceed as in Paragraph 4.

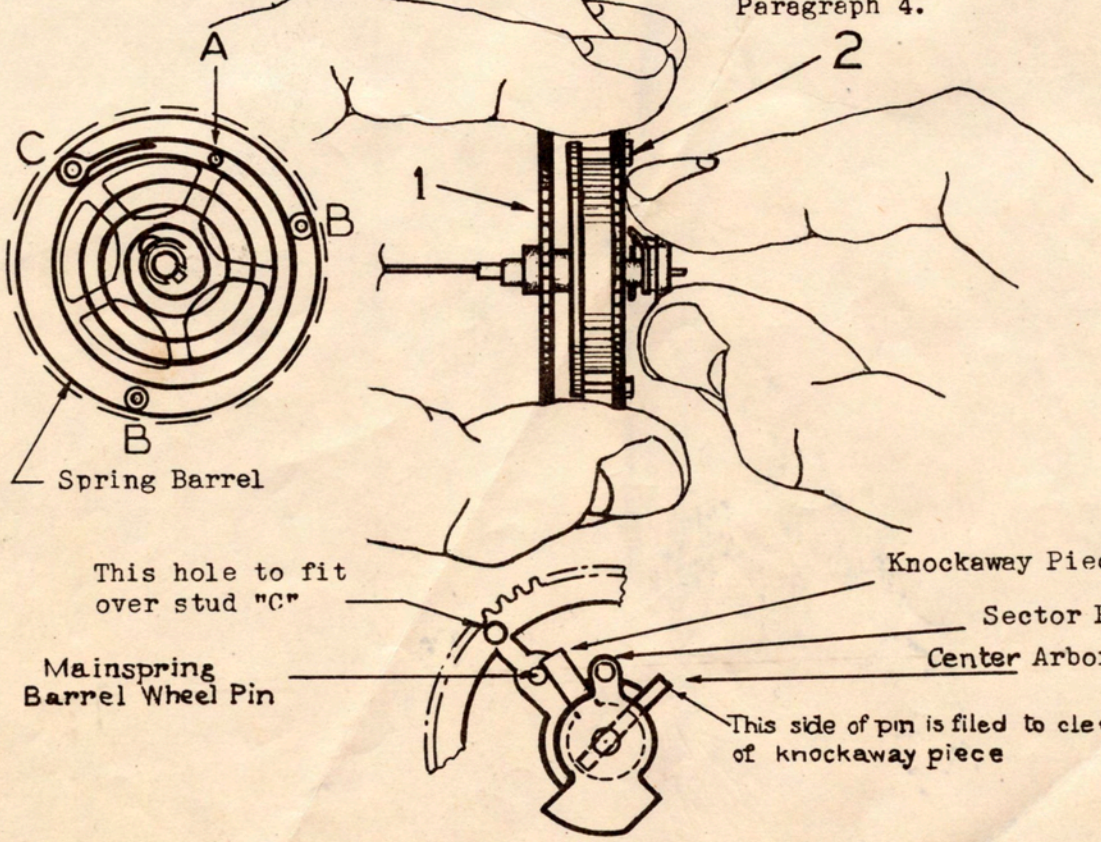

Prep. by: H. Maers	Appr. by:	Issued : May 17, 1945	Supers.