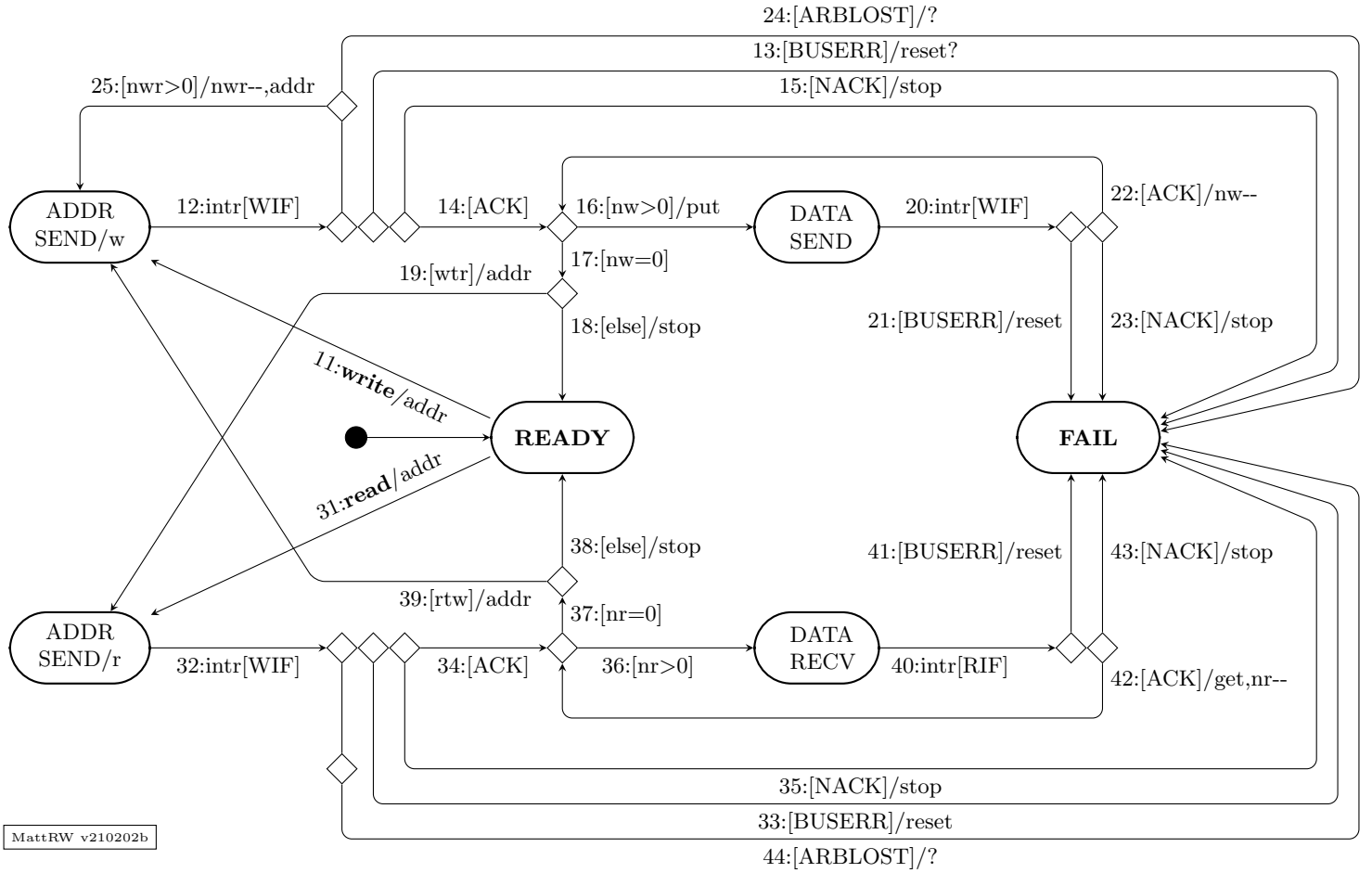
24:[ARBLOST]/?
13:[BUSERR]/reset?
25:[nwr>0]/nwr--,addr
15:[NACK]/stop
ADDR SEND/w
12:intr[WIF]
14:[ACK]
16:[nw>0]/put
DATA SEND
20:intr[WIF]
22:[ACK]/nw--
17:[nw=0]
19:[wtr]/addr
18:[else]/stop
21:[BUSERR]/reset
23:[NACK]/stop
11:write/addr
READY
FAIL
31:read/addr
38:[else]/stop
41:[BUSERR]/reset
43:[NACK]/stop
39:[rtw]/addr
37:[nr=0]
ADDR SEND/r
32:intr[WIF]
34:[ACK]
36:[nr>0]
DATA RECV
40:intr[RIF]
42:[ACK]/get,nr--
35:[NACK]/stop
33:[BUSERR]/reset
44:[ARBLOST]/?
MattRW v210202b

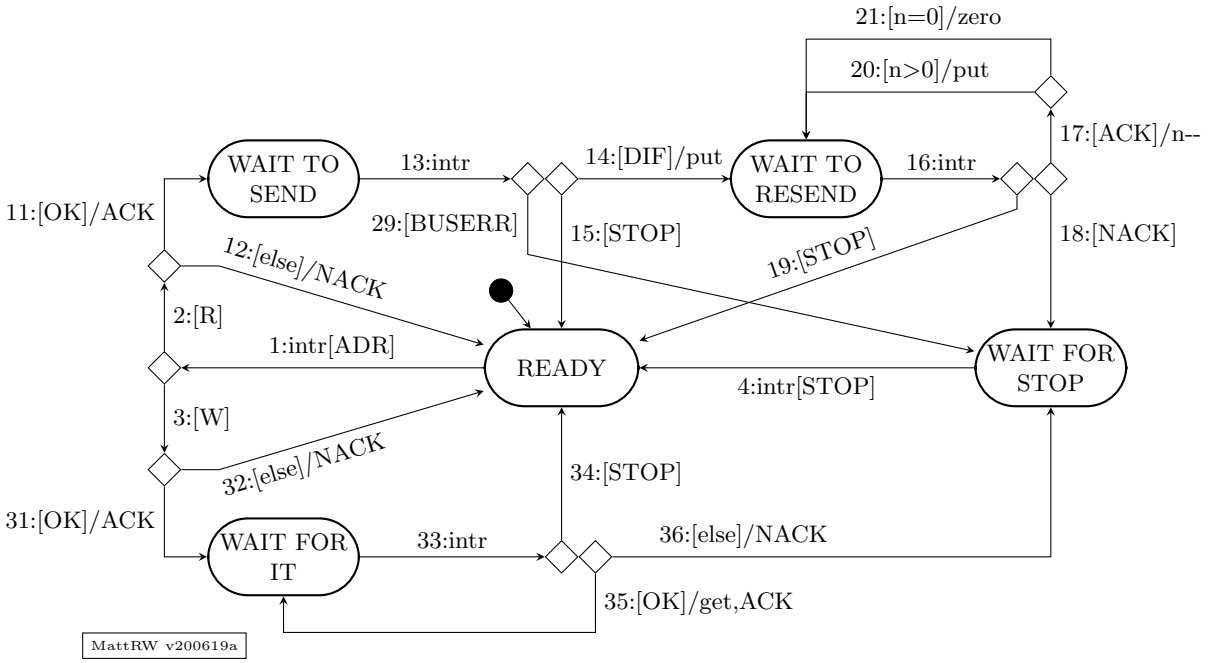
21:[n=0]/zero
20:[n>0]/put
17:[ACK]/n--
WAIT TO SEND
13:intr
14:[DIF]/put
WAIT TO RESEND
16:intr
11:[OK]/ACK
29:[BUSERR]
15:[STOP]
18:[NACK]
12:[else]/NACK
19:[STOP]
2:[R]
1:intr[ADR]
READY
WAIT FOR STOP
4:intr[STOP]
3:[W]
32:[else]/NACK
34:[STOP]
31:[OK]/ACK
WAIT FOR IT
33:intr
36:[else]/NACK
35:[OK]/get,ACK
MattRW v200619a