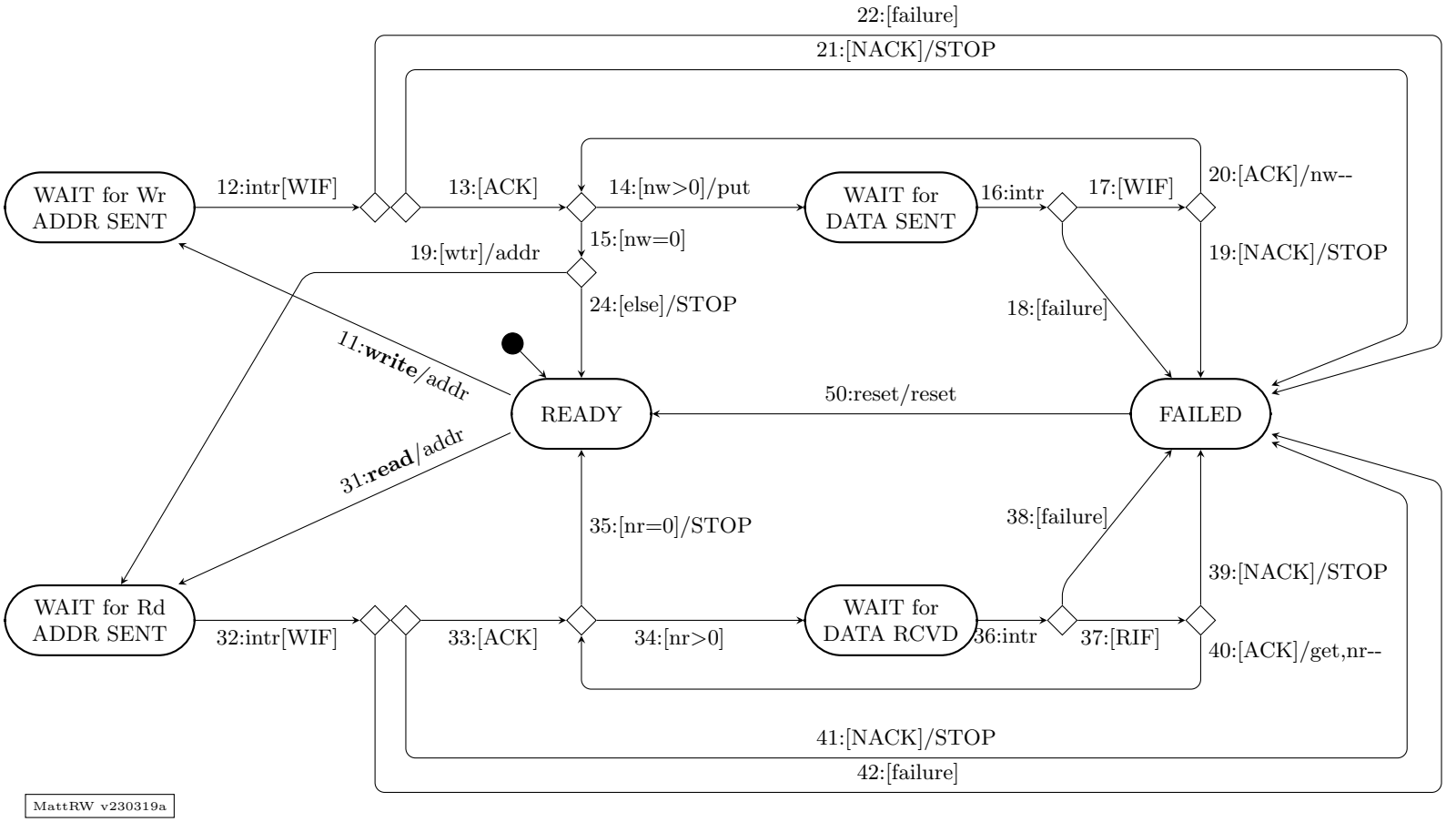
22:[failure]
21:[NACK]/STOP
WAIT for Wr ADDR SENT
12:intr[WIF]
13:[ACK]
14:[nw>0]/put
WAIT for DATA SENT
16:intr
17:[WIF]
20:[ACK]/nw--
15:[nw=0]
19:[wtr]/addr
19:[NACK]/STOP
24:[else]/STOP
18:[failure]
11:write/addr
READY
50:reset/reset
FAILED
31:read/addr
35:[nr=0]/STOP
38:[failure]
39:[NACK]/STOP
WAIT for Rd ADDR SENT
32:intr[WIF]
33:[ACK]
34:[nr>0]
WAIT for DATA RCVD
36:intr
37:[RIF]
40:[ACK]/get,nr--
41:[NACK]/STOP
42:[failure]
MattRW v230319a

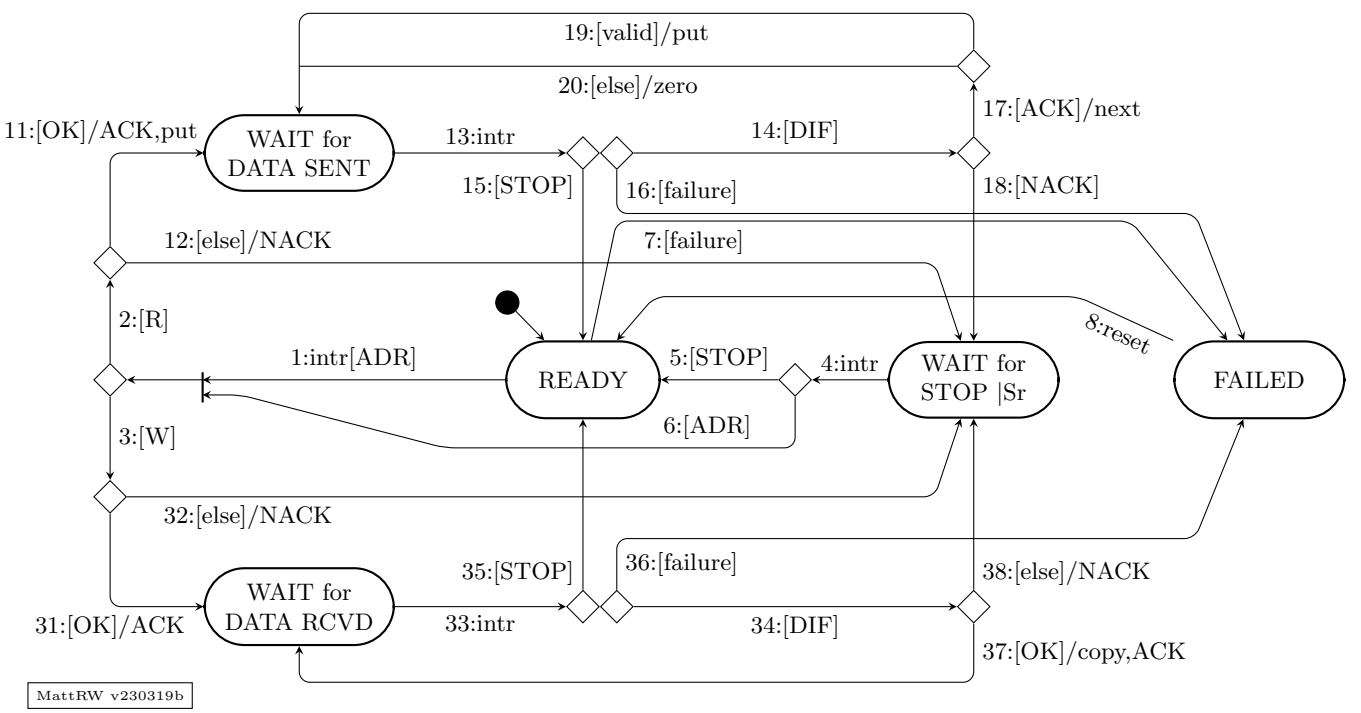
19:[valid]/put
20:[else]/zero
17:[ACK]/next
11:[OK]/ACK,put
WAIT for DATA SENT
13:intr
14:[DIF]
15:[STOP]
16:[failure]
18:[NACK]
12:[else]/NACK
7:[failure]
2:[R]
8:reset
1:intr[ADR]
READY
5:[STOP]
4:intr
WAIT for STOP |Sr
FAILED
6:[ADR]
3:[W]
32:[else]/NACK
35:[STOP]
36:[failure]
38:[else]/NACK
WAIT for DATA RCVD
31:[OK]/ACK
33:intr
34:[DIF]
37:[OK]/copy,ACK
MattRW v230319b