Problem 1

Show all work for the following questions, including the equation and substitution with units.
An 80 N force has been applied to a block and move it 20 m along the direction of the force.
How much work has been done to the block?

Problem 2

Calculate the work done when a $20 - \mathrm{N}$ force pushes a cart 3.5 m ?

Problem 3

How much work is required to lift a 360 kilogram piano to a window whose height is 10 meters from the ground?

Problem 4

A box rests on a horizontal, frictionless surface. A girl pushes on the box with a force of 18 N to the right and a boy pushes on the box with a force of 12 N to the left. The box moves 4.0 m to the right. Find the work done by (a) the girl, (b) the boy, and (c) the net force.

(a) the girl

(b) the boy

(c) the net force

Problem 5

If 100 N force has 30° angle pulling on 15 kg block for 5 m . What's the work?

Problem 6

Calculate the power expended when a 500 N barbell is lifted 2.2 m in 2 s .

Problem 7

An escalator is used to move 20 passengers every minute from the first floor of a department store to the second. The second floor is located 5 -meters above the first floor. The average passenger's mass is 60 kg . Determine the power requirement of the escalator in order to move this number of passengers in this amount of time.

Problem 8

A 500 N force is applied to an object. If the object travels with a constant velocity of 20 meters per second, calculate the power expended on the object.

Problem 9

An elevator must lift 1000 kg a distance of 100 m at a velocity of 4 m/s. What is the average power the elevator exerts during this trip?

Problem 10

The floor of the basement of a house is 3.0 m below ground level, and the floor of the attic is 5.0 m above ground level. What is the change in potential energy if a 2.0 kg object in the attic is brought to the basement?

Problem 11

A box has a mass of 5.8 kg . The box is lifted from the garage floor and placed on a shelf. If the box gains 145J of Potential Energy (PE), how high is the shelf?

Problem 12

A man climbs on to a wall that is 3.6 m high and gains 2268 J of potential energy. What is the mass of the man?

Problem 13

A linear spring has a constant of 377.16 N/m. How much force is necessary to stretch it 0.39 m ?

Problem 14

It requires a force of 594.55 N to stretch a certain linear spring 0.15 m . What is the constant for this spring?

Problem 15

Vincent's mountain bike has a spring with a constant of 64 N/m in the front-wheel suspension, and it compressed 0.17 m when she hit a bump. How much energy does the front spring now store?

Problem 16

A spring has a potential energy of 22.14 J and a constant of 676.96 N/m. How far has it been stretched?

Problem 17

A 3 kg ball is rolling 2 m/s. How much kinetic energy does it have?

Problem 18

(a) Determine the kinetic energy of a $500-\text{kg}$ roller coaster car that is moving with a speed of 20 m/s.

(b) If the roller coaster car were moving with twice the speed, then what would be its new kinetic energy?

Problem 19

Missy Diwater, the former platform diver for the Ringling Brother's Circus, had a kinetic energy of 12000 J just prior to hitting the bucket of water. If Missy's mass is 40 kg , then what is her speed?

Problem 20

A skater of mass 60 kg has an initial velocity of 12 m/s. He slides on ice where the frictional force is 36 N . How far will the skater slide before he stops?

Problem 21

A diver of mass m drops from a board 10.0 m above the water surface. Find his speed 5.00 m above the water surface.

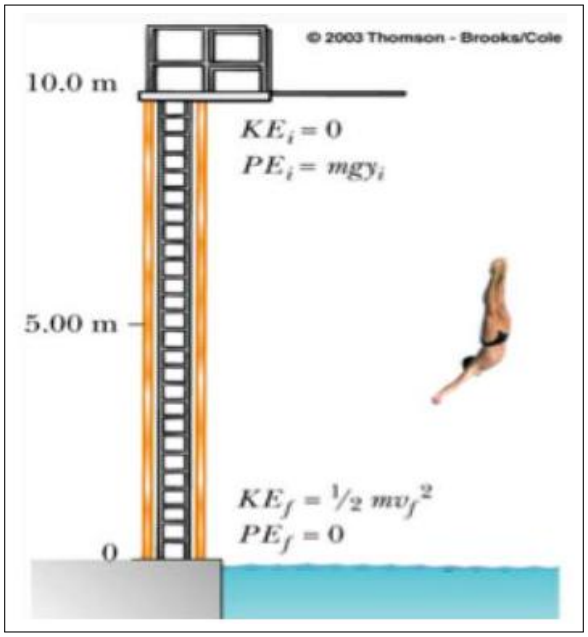

Problem 22

A diver of mass m drops from a board 10.0 m above the water surface. Find his speed right above the water surface.

Problem 23

A skier slides down the frictionless slope as shown. What is the skier's speed at the bottom?

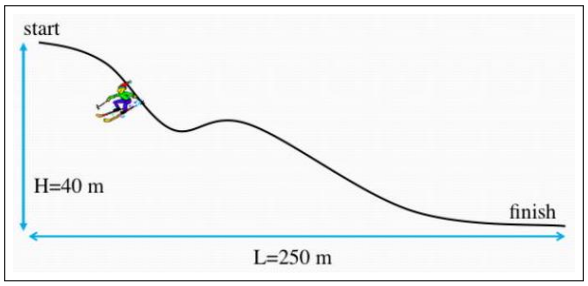

Problem 24

Three identical balls are thrown from the top of a building with the same initial speed. Initially,

Ball 1 moves horizontally Ball 2 moves upward. Ball 3 moves downward. Neglecting air resistance, which ball has the fastest speed when it hits the ground?

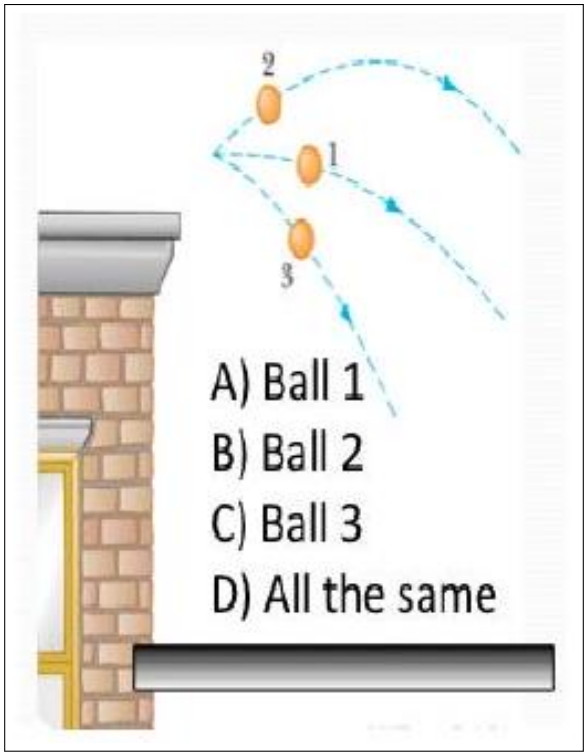

Problem 25

Tarzan swings from a vine whose length is 12 m . If Tarzan starts at an angle of 30 degrees with respect to the vertical and has no initial speed, what is his speed at the bottom of the arc?

Problem 26

A certain car can go from 0 to 100 km/h in 10 s . If the engine delivered four-times the power to the wheel, how many seconds would it take?

Problem 27

A $60-\mathrm{N}$ force is applied to a $100-\mathrm{kg}$ cart at rest for 5 seconds on a frictionless surface.

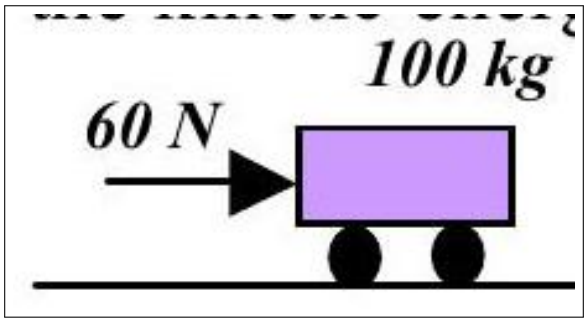

(a) What's the momentum change of the cart?

(b) How much work has been done to the cart?

(c) What's the average power in the first 20 seconds?

(d) What's the kinetic energy of the cart after 20 seconds?

Problem 28

A mass, M, is hung from a spring and reaches equilibrium at position B. The mass is then raised to position A and released. The mass oscillates between positions A and C.

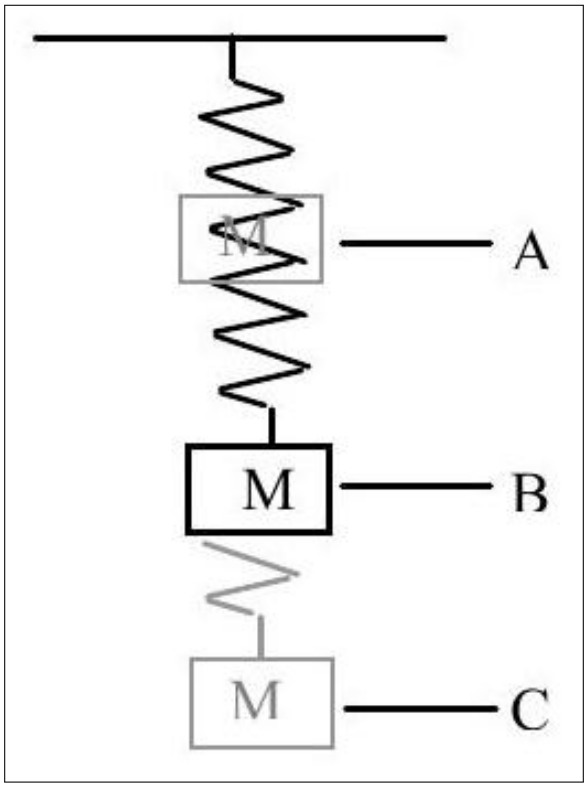

(a) At which position (A, B, or C) is mass M located when the kinetic energy of the system is at a maximum? Explain it.

(b) At which position is mass M located when the gravitational potential energy of the system is at a maximum? Explain it.

(c) At which position is mass M located when the elastic potential energy of the system is at a maximum? Explain it.

Problem 29

A rollercoaster cart leaves point A at a speed of 4 m/s, passes through point B on the ground, and reaches point C at a speed of 6 m/s. The total mass of the cart assembly and the passengers are 300 kg

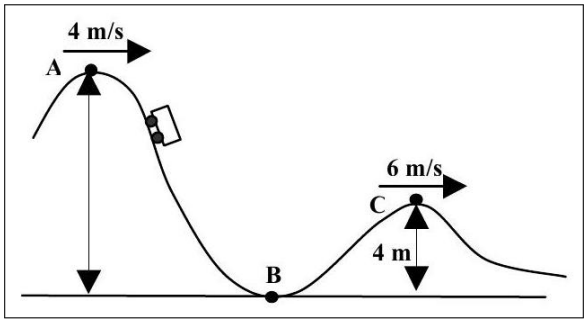

(a) What is the speed of the cart at point B ?

(b) What is the height of point A?

Problem 30

The length of the ropes on a playground swing is 2.0 m

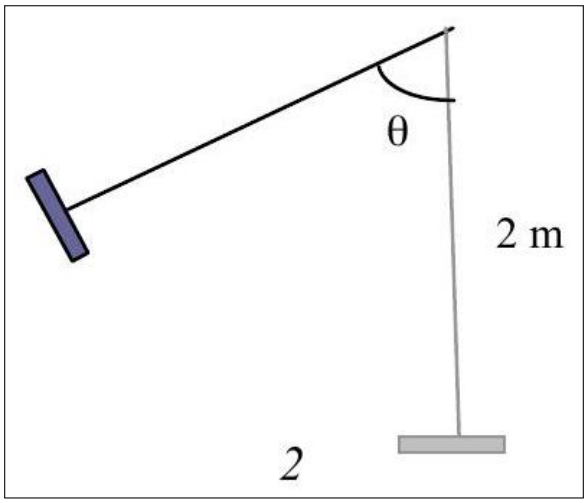

(a) What is the maximum speed attainable on the swing if the maximum value of θ is $60°$?

(b) If a $50-$ kg person is playing the swing, what is the maximum kinetic energy he can attain?