PRELIMINARY

LUMINARY MICRO®

LM3S8962 Microcontroller

DATA SHEET

DS-LM3S8962-5367

Copyright © 2007-2009 Luminary Micro, Inc.

Legal Disclaimers and Trademark Information

INFORMATION IN THIS DOCUMENT IS PROVIDED IN CONNECTION WITH LUMINARY MICRO PRODUCTS. NO LICENSE, EXPRESS OR IMPLIED, BY ESTOPPEL OR OTHERWISE, TO ANY INTELLECTUAL PROPERTY RIGHTS IS GRANTED BY THIS DOCUMENT. EXCEPT AS PROVIDED IN LUMINARY MICRO'S TERMS AND CONDITIONS OF SALE FOR SUCH PRODUCTS, LUMINARY MICRO ASSUMES NO LIABILITY WHATSOEVER, AND LUMINARY MICRO DISCLAIMS ANY EXPRESS OR IMPLIED WARRANTY, RELATING TO SALE AND/OR USE OF LUMINARY MICRO'S PRODUCTS INCLUDING LIABILITY OR WARRANTIES RELATING TO FITNESS FOR A PARTICULAR PURPOSE, MERCHANTABILITY, OR INFRINGEMENT OF ANY PATENT, COPYRIGHT OR OTHER INTELLECTUAL PROPERTY RIGHT. LUMINARY MICRO'S PRODUCTS ARE NOT INTENDED FOR USE IN MEDICAL, LIFE SAVING, OR LIFE-SUSTAINING APPLICATIONS.

Luminary Micro may make changes to specifications and product descriptions at any time, without notice. Contact your local Luminary Micro sales office or your distributor to obtain the latest specifications before placing your product order.

Designers must not rely on the absence or characteristics of any features or instructions marked "reserved" or "undefined." Luminary Micro reserves these for future definition and shall have no responsibility whatsoever for conflicts or incompatibilities arising from future changes to them.

Copyright © 2007-2009 Luminary Micro, Inc. All rights reserved. Stellaris, Luminary Micro, and the Luminary Micro logo are registered trademarks, and StellarisWare is a trademark of Luminary Micro, Inc. or its subsidiaries in the United States and other countries. ARM and Thumb are registered trademarks and Cortex is a trademark of ARM Limited. Other names and brands may be claimed as the property of others.

Luminary Micro, Inc.
108 Wild Basin, Suite 350
Austin, TX 78746
Main: +1-512-279-8800
Fax: +1-512-279-8879
http://www.luminarymicro.com

Table of Contents

Revision History **22**
About This Document **25**
Audience 25
About This Manual 25
Related Documents 25
Documentation Conventions 25
1 Architectural Overview **28**
1.1 Product Features 28
1.2 Target Applications 37
1.3 High-Level Block Diagram 38
1.4 Functional Overview 40
1.4.1 ARM Cortex™-M3 40
1.4.2 Motor Control Peripherals 41
1.4.3 Analog Peripherals 41
1.4.4 Serial Communications Peripherals 42
1.4.5 System Peripherals 44
1.4.6 Memory Peripherals 45
1.4.7 Additional Features 45
1.4.8 Hardware Details 46
2 ARM Cortex-M3 Processor Core **47**
2.1 Block Diagram 48
2.2 Functional Description 48
2.2.1 Serial Wire and JTAG Debug 48
2.2.2 Embedded Trace Macrocell (ETM) 49
2.2.3 Trace Port Interface Unit (TPIU) 49
2.2.4 ROM Table 49
2.2.5 Memory Protection Unit (MPU) 49
2.2.6 Nested Vectored Interrupt Controller (NVIC) 49
3 Memory Map **53**
4 Interrupts **56**
5 JTAG Interface **59**
5.1 Block Diagram 60
5.2 Functional Description 60
5.2.1 JTAG Interface Pins 60
5.2.2 JTAG TAP Controller 62
5.2.3 Shift Registers 63
5.2.4 Operational Considerations 63
5.3 Initialization and Configuration 66
5.4 Register Descriptions 66
5.4.1 Instruction Register (IR) 66
5.4.2 Data Registers 68
6 System Control **71**
6.1 Functional Description 71
6.1.1 Device Identification 71

6.1.2 Reset Control ... 71
6.1.3 Power Control ... 74
6.1.4 Clock Control ... 75
6.1.5 System Control ... 79
6.2 Initialization and Configuration ... 80
6.3 Register Map ... 80
6.4 Register Descriptions ... 81

7 Hibernation Module ... 136
7.1 Block Diagram ... 137
7.2 Functional Description ... 137
7.2.1 Register Access Timing ... 137
7.2.2 Clock Source ... 138
7.2.3 Battery Management ... 139
7.2.4 Real-Time Clock ... 139
7.2.5 Non-Volatile Memory ... 140
7.2.6 Power Control ... 140
7.2.7 Initiating Hibernate ... 140
7.2.8 Interrupts and Status ... 141
7.3 Initialization and Configuration ... 141
7.3.1 Initialization ... 141
7.3.2 RTC Match Functionality (No Hibernation) ... 141
7.3.3 RTC Match/Wake-Up from Hibernation ... 142
7.3.4 External Wake-Up from Hibernation ... 142
7.3.5 RTC/External Wake-Up from Hibernation ... 142
7.4 Register Map ... 142
7.5 Register Descriptions ... 143

8 Internal Memory ... 156
8.1 Block Diagram ... 156
8.2 Functional Description ... 156
8.2.1 SRAM Memory ... 156
8.2.2 Flash Memory ... 157
8.3 Flash Memory Initialization and Configuration ... 158
8.3.1 Flash Programming ... 158
8.3.2 Nonvolatile Register Programming ... 158
8.4 Register Map ... 159
8.5 Flash Register Descriptions (Flash Control Offset) ... 160
8.6 Flash Register Descriptions (System Control Offset) ... 167

9 General-Purpose Input/Outputs (GPIOs) ... 180
9.1 Functional Description ... 180
9.1.1 Data Control ... 181
9.1.2 Interrupt Control ... 182
9.1.3 Mode Control ... 183
9.1.4 Commit Control ... 183
9.1.5 Pad Control ... 183
9.1.6 Identification ... 184
9.2 Initialization and Configuration ... 184
9.3 Register Map ... 185
9.4 Register Descriptions ... 187

10 General-Purpose Timers 222
10.1 Block Diagram 223
10.2 Functional Description 224
10.2.1 GPTM Reset Conditions 224
10.2.2 32-Bit Timer Operating Modes 224
10.2.3 16-Bit Timer Operating Modes 225
10.3 Initialization and Configuration 229
10.3.1 32-Bit One-Shot/Periodic Timer Mode 229
10.3.2 32-Bit Real-Time Clock (RTC) Mode 230
10.3.3 16-Bit One-Shot/Periodic Timer Mode 230
10.3.4 16-Bit Input Edge Count Mode 231
10.3.5 16-Bit Input Edge Timing Mode 231
10.3.6 16-Bit PWM Mode 232
10.4 Register Map 232
10.5 Register Descriptions 233
11 Watchdog Timer 258
11.1 Block Diagram 259
11.2 Functional Description 259
11.3 Initialization and Configuration 260
11.4 Register Map 260
11.5 Register Descriptions 261
12 Analog-to-Digital Converter (ADC) 282
12.1 Block Diagram 282
12.2 Functional Description 283
12.2.1 Sample Sequencers 283
12.2.2 Module Control 284
12.2.3 Hardware Sample Averaging Circuit 285
12.2.4 Analog-to-Digital Converter 285
12.2.5 Differential Sampling 285
12.2.6 Test Modes 287
12.2.7 Internal Temperature Sensor 288
12.3 Initialization and Configuration 288
12.3.1 Module Initialization 288
12.3.2 Sample Sequencer Configuration 289
12.4 Register Map 289
12.5 Register Descriptions 290
13 Universal Asynchronous Receivers/Transmitters (UARTs) 318
13.1 Block Diagram 319
13.2 Functional Description 319
13.2.1 Transmit/Receive Logic 319
13.2.2 Baud-Rate Generation 320
13.2.3 Data Transmission 321
13.2.4 Serial IR (SIR) 321
13.2.5 FIFO Operation 322
13.2.6 Interrupts 322
13.2.7 Loopback Operation 323
13.2.8 IrDA SIR block 323
13.3 Initialization and Configuration 323

13.4 Register Map ... 324
13.5 Register Descriptions ... 325
14 Synchronous Serial Interface (SSI) ... 359
14.1 Block Diagram ... 359
14.2 Functional Description ... 359
14.2.1 Bit Rate Generation ... 360
14.2.2 FIFO Operation ... 360
14.2.3 Interrupts ... 360
14.2.4 Frame Formats ... 361
14.3 Initialization and Configuration ... 368
14.4 Register Map ... 369
14.5 Register Descriptions ... 370
15 Inter-Integrated Circuit (I^2C) Interface ... 396
15.1 Block Diagram ... 397
15.2 Functional Description ... 397
15.2.1 I^2C Bus Functional Overview ... 397
15.2.2 Available Speed Modes ... 399
15.2.3 Interrupts ... 400
15.2.4 Loopback Operation ... 401
15.2.5 Command Sequence Flow Charts ... 401
15.3 Initialization and Configuration ... 408
15.4 Register Map ... 409
15.5 Register Descriptions (I^2C Master) ... 410
15.6 Register Descriptions (I^2C Slave) ... 423
16 Controller Area Network (CAN) Module ... 432
16.1 Block Diagram ... 433
16.2 Functional Description ... 433
16.2.1 Initialization ... 434
16.2.2 Operation ... 435
16.2.3 Transmitting Message Objects ... 436
16.2.4 Configuring a Transmit Message Object ... 436
16.2.5 Updating a Transmit Message Object ... 437
16.2.6 Accepting Received Message Objects ... 438
16.2.7 Receiving a Data Frame ... 438
16.2.8 Receiving a Remote Frame ... 438
16.2.9 Receive/Transmit Priority ... 439
16.2.10 Configuring a Receive Message Object ... 439
16.2.11 Handling of Received Message Objects ... 440
16.2.12 Handling of Interrupts ... 443
16.2.13 Test Mode ... 443
16.2.14 Bit Timing Configuration Error Considerations ... 445
16.2.15 Bit Time and Bit Rate ... 445
16.2.16 Calculating the Bit Timing Parameters ... 447
16.3 Register Map ... 449
16.4 CAN Register Descriptions ... 450
17 Ethernet Controller ... 478
17.1 Block Diagram ... 478

17.2 Functional Description ... 479
17.2.1 MAC Operation ... 479
17.2.2 Internal MII Operation ... 483
17.2.3 PHY Operation ... 483
17.2.4 Interrupts ... 484
17.3 Initialization and Configuration ... 485
17.3.1 Hardware Configuration ... 485
17.3.2 Software Configuration ... 486
17.4 Ethernet Register Map ... 486
17.5 Ethernet MAC Register Descriptions ... 488
17.6 MII Management Register Descriptions ... 507

18 Analog Comparator ... 526
18.1 Block Diagram ... 526
18.2 Functional Description ... 526
18.2.1 Internal Reference Programming ... 527
18.3 Initialization and Configuration ... 528
18.4 Register Map ... 528
18.5 Register Descriptions ... 529

19 Pulse Width Modulator (PWM) ... 537
19.1 Block Diagram ... 538
19.2 Functional Description ... 539
19.2.1 PWM Timer ... 539
19.2.2 PWM Comparators ... 539
19.2.3 PWM Signal Generator ... 540
19.2.4 Dead-Band Generator ... 541
19.2.5 Interrupt/ADC-Trigger Selector ... 541
19.2.6 Synchronization Methods ... 542
19.2.7 Fault Conditions ... 542
19.2.8 Output Control Block ... 542
19.3 Initialization and Configuration ... 542
19.4 Register Map ... 543
19.5 Register Descriptions ... 545

20 Quadrature Encoder Interface (QEI) ... 574
20.1 Block Diagram ... 574
20.2 Functional Description ... 575
20.3 Initialization and Configuration ... 577
20.4 Register Map ... 578
20.5 Register Descriptions ... 578

21 Pin Diagram ... 591

22 Signal Tables ... 593
22.1 100-Pin LQFP Package Pin Tables ... 593
22.2 108-Pin BGA Package Pin Tables ... 605

23 Operating Characteristics ... 620

24 Electrical Characteristics ... 621
24.1 DC Characteristics ... 621
24.1.1 Maximum Ratings ... 621
24.1.2 Recommended DC Operating Conditions ... 621

24.1.3 On-Chip Low Drop-Out (LDO) Regulator Characteristics 622
24.1.4 GPIO Module Characteristics 622
24.1.5 Power Specifications 622
24.1.6 Flash Memory Characteristics 624
24.1.7 Hibernation 624
24.2 AC Characteristics 624
24.2.1 Load Conditions 624
24.2.2 Clocks 625
24.2.3 JTAG and Boundary Scan 626
24.2.4 Reset 627
24.2.5 Hibernation Module 629
24.2.6 General-Purpose I/O (GPIO) 630
24.2.7 Analog-to-Digital Converter 630
24.2.8 Synchronous Serial Interface (SSI) 631
24.2.9 Inter-Integrated Circuit (I^2C) Interface 632
24.2.10 Ethernet Controller 633
24.2.11 Analog Comparator 636

25 Package Information 637

A Serial Flash Loader 641
A.1 Serial Flash Loader 641
A.2 Interfaces 641
A.2.1 UART 641
A.2.2 SSI 641
A.3 Packet Handling 642
A.3.1 Packet Format 642
A.3.2 Sending Packets 642
A.3.3 Receiving Packets 642
A.4 Commands 643
A.4.1 COMMAND_PING (0X20) 643
A.4.2 COMMAND_GET_STATUS (0x23) 643
A.4.3 COMMAND_DOWNLOAD (0x21) 643
A.4.4 COMMAND_SEND_DATA (0x24) 644
A.4.5 COMMAND_RUN (0x22) 644
A.4.6 COMMAND_RESET (0x25) 644

B Register Quick Reference 646

C Ordering and Contact Information 668
C.1 Ordering Information 668
C.2 Kits 668
C.3 Company Information 669
C.4 Support Information 669

List of Figures

Figure 1-1. Stellaris® LM3S8962 Microcontroller High-Level Block Diagram 39
Figure 2-1. CPU Block Diagram 48
Figure 2-2. TPIU Block Diagram 49
Figure 5-1. JTAG Module Block Diagram 60
Figure 5-2. Test Access Port State Machine 63
Figure 5-3. IDCODE Register Format 69
Figure 5-4. BYPASS Register Format 69
Figure 5-5. Boundary Scan Register Format 70
Figure 6-1. External Circuitry to Extend Reset 72
Figure 6-2. Power Architecture 75
Figure 6-3. Main Clock Tree 77
Figure 7-1. Hibernation Module Block Diagram 137
Figure 7-2. Clock Source Using Crystal 138
Figure 7-3. Clock Source Using Dedicated Oscillator 139
Figure 8-1. Flash Block Diagram 156
Figure 9-1. GPIO Port Block Diagram 181
Figure 9-2. GPIODATA Write Example 182
Figure 9-3. GPIODATA Read Example 182
Figure 10-1. GPTM Module Block Diagram 223
Figure 10-2. 16-Bit Input Edge Count Mode Example 227
Figure 10-3. 16-Bit Input Edge Time Mode Example 228
Figure 10-4. 16-Bit PWM Mode Example 229
Figure 11-1. WDT Module Block Diagram 259
Figure 12-1. ADC Module Block Diagram 283
Figure 12-2. Differential Sampling Range, V_{IN_ODD} = 1.5 V 286
Figure 12-3. Differential Sampling Range, V_{IN_ODD} = 0.75 V 287
Figure 12-4. Differential Sampling Range, V_{IN_ODD} = 2.25 V 287
Figure 12-5. Internal Temperature Sensor Characteristic 288
Figure 13-1. UART Module Block Diagram 319
Figure 13-2. UART Character Frame 320
Figure 13-3. IrDA Data Modulation 322
Figure 14-1. SSI Module Block Diagram 359
Figure 14-2. TI Synchronous Serial Frame Format (Single Transfer) 362
Figure 14-3. TI Synchronous Serial Frame Format (Continuous Transfer) 362
Figure 14-4. Freescale SPI Format (Single Transfer) with SPO=0 and SPH=0 363
Figure 14-5. Freescale SPI Format (Continuous Transfer) with SPO=0 and SPH=0 363
Figure 14-6. Freescale SPI Frame Format with SPO=0 and SPH=1 364
Figure 14-7. Freescale SPI Frame Format (Single Transfer) with SPO=1 and SPH=0 365
Figure 14-8. Freescale SPI Frame Format (Continuous Transfer) with SPO=1 and SPH=0 365
Figure 14-9. Freescale SPI Frame Format with SPO=1 and SPH=1 366
Figure 14-10. MICROWIRE Frame Format (Single Frame) 367
Figure 14-11. MICROWIRE Frame Format (Continuous Transfer) 368
Figure 14-12. MICROWIRE Frame Format, SSIFss Input Setup and Hold Requirements 368
Figure 15-1. I^2C Block Diagram 397
Figure 15-2. I^2C Bus Configuration 397

Figure 15-3. START and STOP Conditions 398
Figure 15-4. Complete Data Transfer with a 7-Bit Address 398
Figure 15-5. R/S Bit in First Byte 398
Figure 15-6. Data Validity During Bit Transfer on the I^2C Bus 399
Figure 15-7. Master Single SEND 402
Figure 15-8. Master Single RECEIVE 403
Figure 15-9. Master Burst SEND 404
Figure 15-10. Master Burst RECEIVE 405
Figure 15-11. Master Burst RECEIVE after Burst SEND 406
Figure 15-12. Master Burst SEND after Burst RECEIVE 407
Figure 15-13. Slave Command Sequence 408
Figure 16-1. CAN Controller Block Diagram 433
Figure 16-2. CAN Data/Remote Frame 434
Figure 16-3. Message Objects in a FIFO Buffer 442
Figure 16-4. CAN Bit Time 446
Figure 17-1. Ethernet Controller 479
Figure 17-2. Ethernet Controller Block Diagram 479
Figure 17-3. Ethernet Frame 480
Figure 17-4. Interface to an Ethernet Jack 485
Figure 18-1. Analog Comparator Module Block Diagram 526
Figure 18-2. Structure of Comparator Unit 527
Figure 18-3. Comparator Internal Reference Structure 527
Figure 19-1. PWM Unit Diagram 538
Figure 19-2. PWM Module Block Diagram 539
Figure 19-3. PWM Count-Down Mode 540
Figure 19-4. PWM Count-Up/Down Mode 540
Figure 19-5. PWM Generation Example In Count-Up/Down Mode 541
Figure 19-6. PWM Dead-Band Generator 541
Figure 20-1. QEI Block Diagram 575
Figure 20-2. Quadrature Encoder and Velocity Predivider Operation 576
Figure 21-1. 100-Pin LQFP Package Pin Diagram 591
Figure 21-2. 108-Ball BGA Package Pin Diagram (Top View) 592
Figure 24-1. Load Conditions 625
Figure 24-2. JTAG Test Clock Input Timing 627
Figure 24-3. JTAG Test Access Port (TAP) Timing 627
Figure 24-4. JTAG TRST Timing 627
Figure 24-5. External Reset Timing ($\overline{RST}$) 628
Figure 24-6. Power-On Reset Timing 628
Figure 24-7. Brown-Out Reset Timing 628
Figure 24-8. Software Reset Timing 629
Figure 24-9. Watchdog Reset Timing 629
Figure 24-10. Hibernation Module Timing 630
Figure 24-11. SSI Timing for TI Frame Format (FRF=01), Single Transfer Timing Measurement 631
Figure 24-12. SSI Timing for MICROWIRE Frame Format (FRF=10), Single Transfer 632
Figure 24-13. SSI Timing for SPI Frame Format (FRF=00), with SPH=1 632
Figure 24-14. I^2C Timing 633
Figure 24-15. External XTLP Oscillator Characteristics 635
Figure 25-1. 100-Pin LQFP Package 637

Figure 25-2. 108-Ball BGA Package 639

List of Tables

Table 1. Revision History ... 22
Table 2. Documentation Conventions ... 25
Table 3-1. Memory Map ... 53
Table 4-1. Exception Types ... 56
Table 4-2. Interrupts ... 57
Table 5-1. JTAG Port Pins Reset State ... 61
Table 5-2. JTAG Instruction Register Commands ... 66
Table 6-1. System Control Register Map ... 80
Table 7-1. Hibernation Module Register Map ... 143
Table 8-1. Flash Protection Policy Combinations ... 157
Table 8-2. Flash Resident Registers ... 159
Table 8-3. Flash Register Map ... 159
Table 9-1. GPIO Pad Configuration Examples ... 184
Table 9-2. GPIO Interrupt Configuration Example ... 185
Table 9-3. GPIO Register Map ... 186
Table 10-1. Available CCP Pins ... 223
Table 10-2. 16-Bit Timer With Prescaler Configurations ... 226
Table 10-3. Timers Register Map ... 232
Table 11-1. Watchdog Timer Register Map ... 260
Table 12-1. Samples and FIFO Depth of Sequencers ... 283
Table 12-2. Differential Sampling Pairs ... 285
Table 12-3. ADC Register Map ... 289
Table 13-1. UART Register Map ... 324
Table 14-1. SSI Register Map ... 369
Table 15-1. Examples of I^2C Master Timer Period versus Speed Mode ... 400
Table 15-2. Inter-Integrated Circuit (I^2C) Interface Register Map ... 409
Table 15-3. Write Field Decoding for I2CMCS[3:0] Field (Sheet 1 of 3) ... 414
Table 16-1. CAN Protocol Ranges ... 446
Table 16-2. CAN Register Map ... 449
Table 17-1. TX & RX FIFO Organization ... 481
Table 17-2. Ethernet Register Map ... 487
Table 18-1. Internal Reference Voltage and ACREFCTL Field Values ... 528
Table 18-2. Analog Comparators Register Map ... 529
Table 19-1. PWM Register Map ... 543
Table 20-1. QEI Register Map ... 578
Table 22-1. Signals by Pin Number ... 593
Table 22-2. Signals by Signal Name ... 597
Table 22-3. Signals by Function, Except for GPIO ... 601
Table 22-4. GPIO Pins and Alternate Functions ... 604
Table 22-5. Signals by Pin Number ... 605
Table 22-6. Signals by Signal Name ... 610
Table 22-7. Signals by Function, Except for GPIO ... 614
Table 22-8. GPIO Pins and Alternate Functions ... 618
Table 23-1. Temperature Characteristics ... 620
Table 23-2. Thermal Characteristics ... 620
Table 24-1. Maximum Ratings ... 621

Table 24-2. Recommended DC Operating Conditions 621
Table 24-3. LDO Regulator Characteristics 622
Table 24-4. GPIO Module DC Characteristics 622
Table 24-5. Detailed Power Specifications 623
Table 24-6. Flash Memory Characteristics 624
Table 24-7. Hibernation Module DC Characteristics 624
Table 24-8. Phase Locked Loop (PLL) Characteristics 625
Table 24-9. Clock Characteristics 625
Table 24-10. Crystal Characteristics 625
Table 24-11. JTAG Characteristics 626
Table 24-12. Reset Characteristics 627
Table 24-13. Hibernation Module AC Characteristics 629
Table 24-14. GPIO Characteristics 630
Table 24-15. ADC Characteristics 630
Table 24-16. SSI Characteristics 631
Table 24-17. I^2C Characteristics 632
Table 24-18. 100BASE-TX Transmitter Characteristics 633
Table 24-19. 100BASE-TX Transmitter Characteristics (informative) 633
Table 24-20. 100BASE-TX Receiver Characteristics 633
Table 24-21. 10BASE-T Transmitter Characteristics 634
Table 24-22. 10BASE-T Transmitter Characteristics (informative) 634
Table 24-23. 10BASE-T Receiver Characteristics 634
Table 24-24. Isolation Transformers 634
Table 24-25. Ethernet Reference Crystal 635
Table 24-26. External XTLP Oscillator Characteristics 636
Table 24-27. Analog Comparator Characteristics 636
Table 24-28. Analog Comparator Voltage Reference Characteristics 636
Table C-1. Part Ordering Information 668

List of Registers

System Control **71**
Register 1: Device Identification 0 (DID0), offset 0x000 82
Register 2: Brown-Out Reset Control (PBORCTL), offset 0x030 84
Register 3: LDO Power Control (LDOPCTL), offset 0x034 85
Register 4: Raw Interrupt Status (RIS), offset 0x050 86
Register 5: Interrupt Mask Control (IMC), offset 0x054 87
Register 6: Masked Interrupt Status and Clear (MISC), offset 0x058 88
Register 7: Reset Cause (RESC), offset 0x05C 89
Register 8: Run-Mode Clock Configuration (RCC), offset 0x060 90
Register 9: XTAL to PLL Translation (PLLCFG), offset 0x064 95
Register 10: Run-Mode Clock Configuration 2 (RCC2), offset 0x070 96
Register 11: Deep Sleep Clock Configuration (DSLPCLKCFG), offset 0x144 98
Register 12: Device Identification 1 (DID1), offset 0x004 99
Register 13: Device Capabilities 0 (DC0), offset 0x008 101
Register 14: Device Capabilities 1 (DC1), offset 0x010 102
Register 15: Device Capabilities 2 (DC2), offset 0x014 104
Register 16: Device Capabilities 3 (DC3), offset 0x018 106
Register 17: Device Capabilities 4 (DC4), offset 0x01C 108
Register 18: Run Mode Clock Gating Control Register 0 (RCGC0), offset 0x100 110
Register 19: Sleep Mode Clock Gating Control Register 0 (SCGC0), offset 0x110 112
Register 20: Deep Sleep Mode Clock Gating Control Register 0 (DCGC0), offset 0x120 114
Register 21: Run Mode Clock Gating Control Register 1 (RCGC1), offset 0x104 116
Register 22: Sleep Mode Clock Gating Control Register 1 (SCGC1), offset 0x114 119
Register 23: Deep Sleep Mode Clock Gating Control Register 1 (DCGC1), offset 0x124 122
Register 24: Run Mode Clock Gating Control Register 2 (RCGC2), offset 0x108 125
Register 25: Sleep Mode Clock Gating Control Register 2 (SCGC2), offset 0x118 127
Register 26: Deep Sleep Mode Clock Gating Control Register 2 (DCGC2), offset 0x128 129
Register 27: Software Reset Control 0 (SRCR0), offset 0x040 131
Register 28: Software Reset Control 1 (SRCR1), offset 0x044 132
Register 29: Software Reset Control 2 (SRCR2), offset 0x048 134

Hibernation Module **136**
Register 1: Hibernation RTC Counter (HIBRTCC), offset 0x000 144
Register 2: Hibernation RTC Match 0 (HIBRTCM0), offset 0x004 145
Register 3: Hibernation RTC Match 1 (HIBRTCM1), offset 0x008 146
Register 4: Hibernation RTC Load (HIBRTCLD), offset 0x00C 147
Register 5: Hibernation Control (HIBCTL), offset 0x010 148
Register 6: Hibernation Interrupt Mask (HIBIM), offset 0x014 150
Register 7: Hibernation Raw Interrupt Status (HIBRIS), offset 0x018 151
Register 8: Hibernation Masked Interrupt Status (HIBMIS), offset 0x01C 152
Register 9: Hibernation Interrupt Clear (HIBIC), offset 0x020 153
Register 10: Hibernation RTC Trim (HIBRTCT), offset 0x024 154
Register 11: Hibernation Data (HIBDATA), offset 0x030-0x12C 155

Internal Memory **156**
Register 1: Flash Memory Address (FMA), offset 0x000 161
Register 2: Flash Memory Data (FMD), offset 0x004 162

Register 3: Flash Memory Control (FMC), offset 0x008 163
Register 4: Flash Controller Raw Interrupt Status (FCRIS), offset 0x00C 165
Register 5: Flash Controller Interrupt Mask (FCIM), offset 0x010 166
Register 6: Flash Controller Masked Interrupt Status and Clear (FCMISC), offset 0x014 167
Register 7: USec Reload (USECRL), offset 0x140 168
Register 8: Flash Memory Protection Read Enable 0 (FMPRE0), offset 0x130 and 0x200 169
Register 9: Flash Memory Protection Program Enable 0 (FMPPE0), offset 0x134 and 0x400 170
Register 10: User Debug (USER_DBG), offset 0x1D0 171
Register 11: User Register 0 (USER_REG0), offset 0x1E0 172
Register 12: User Register 1 (USER_REG1), offset 0x1E4 173
Register 13: Flash Memory Protection Read Enable 1 (FMPRE1), offset 0x204 174
Register 14: Flash Memory Protection Read Enable 2 (FMPRE2), offset 0x208 175
Register 15: Flash Memory Protection Read Enable 3 (FMPRE3), offset 0x20C 176
Register 16: Flash Memory Protection Program Enable 1 (FMPPE1), offset 0x404 177
Register 17: Flash Memory Protection Program Enable 2 (FMPPE2), offset 0x408 178
Register 18: Flash Memory Protection Program Enable 3 (FMPPE3), offset 0x40C 179

General-Purpose Input/Outputs (GPIOs) 180

Register 1: GPIO Data (GPIODATA), offset 0x000 188
Register 2: GPIO Direction (GPIODIR), offset 0x400 189
Register 3: GPIO Interrupt Sense (GPIOIS), offset 0x404 190
Register 4: GPIO Interrupt Both Edges (GPIOIBE), offset 0x408 191
Register 5: GPIO Interrupt Event (GPIOIEV), offset 0x40C 192
Register 6: GPIO Interrupt Mask (GPIOIM), offset 0x410 193
Register 7: GPIO Raw Interrupt Status (GPIORIS), offset 0x414 194
Register 8: GPIO Masked Interrupt Status (GPIOMIS), offset 0x418 195
Register 9: GPIO Interrupt Clear (GPIOICR), offset 0x41C 196
Register 10: GPIO Alternate Function Select (GPIOAFSEL), offset 0x420 197
Register 11: GPIO 2-mA Drive Select (GPIODR2R), offset 0x500 199
Register 12: GPIO 4-mA Drive Select (GPIODR4R), offset 0x504 200
Register 13: GPIO 8-mA Drive Select (GPIODR8R), offset 0x508 201
Register 14: GPIO Open Drain Select (GPIOODR), offset 0x50C 202
Register 15: GPIO Pull-Up Select (GPIOPUR), offset 0x510 203
Register 16: GPIO Pull-Down Select (GPIOPDR), offset 0x514 204
Register 17: GPIO Slew Rate Control Select (GPIOSLR), offset 0x518 205
Register 18: GPIO Digital Enable (GPIODEN), offset 0x51C 206
Register 19: GPIO Lock (GPIOLOCK), offset 0x520 207
Register 20: GPIO Commit (GPIOCR), offset 0x524 208
Register 21: GPIO Peripheral Identification 4 (GPIOPeriphID4), offset 0xFD0 210
Register 22: GPIO Peripheral Identification 5 (GPIOPeriphID5), offset 0xFD4 211
Register 23: GPIO Peripheral Identification 6 (GPIOPeriphID6), offset 0xFD8 212
Register 24: GPIO Peripheral Identification 7 (GPIOPeriphID7), offset 0xFDC 213
Register 25: GPIO Peripheral Identification 0 (GPIOPeriphID0), offset 0xFE0 214
Register 26: GPIO Peripheral Identification 1 (GPIOPeriphID1), offset 0xFE4 215
Register 27: GPIO Peripheral Identification 2 (GPIOPeriphID2), offset 0xFE8 216
Register 28: GPIO Peripheral Identification 3 (GPIOPeriphID3), offset 0xFEC 217
Register 29: GPIO PrimeCell Identification 0 (GPIOPCellID0), offset 0xFF0 218
Register 30: GPIO PrimeCell Identification 1 (GPIOPCellID1), offset 0xFF4 219
Register 31: GPIO PrimeCell Identification 2 (GPIOPCellID2), offset 0xFF8 220

Register 32: GPIO PrimeCell Identification 3 (GPIOPCellID3), offset 0xFFC 221

General-Purpose Timers 222

Register 1: GPTM Configuration (GPTMCFG), offset 0x000 234
Register 2: GPTM TimerA Mode (GPTMTAMR), offset 0x004 235
Register 3: GPTM TimerB Mode (GPTMTBMR), offset 0x008 237
Register 4: GPTM Control (GPTMCTL), offset 0x00C 239
Register 5: GPTM Interrupt Mask (GPTMIMR), offset 0x018 242
Register 6: GPTM Raw Interrupt Status (GPTMRIS), offset 0x01C 244
Register 7: GPTM Masked Interrupt Status (GPTMMIS), offset 0x020 245
Register 8: GPTM Interrupt Clear (GPTMICR), offset 0x024 246
Register 9: GPTM TimerA Interval Load (GPTMTAILR), offset 0x028 248
Register 10: GPTM TimerB Interval Load (GPTMTBILR), offset 0x02C 249
Register 11: GPTM TimerA Match (GPTMTAMATCHR), offset 0x030 250
Register 12: GPTM TimerB Match (GPTMTBMATCHR), offset 0x034 251
Register 13: GPTM TimerA Prescale (GPTMTAPR), offset 0x038 252
Register 14: GPTM TimerB Prescale (GPTMTBPR), offset 0x03C 253
Register 15: GPTM TimerA Prescale Match (GPTMTAPMR), offset 0x040 254
Register 16: GPTM TimerB Prescale Match (GPTMTBPMR), offset 0x044 255
Register 17: GPTM TimerA (GPTMTAR), offset 0x048 256
Register 18: GPTM TimerB (GPTMTBR), offset 0x04C 257

Watchdog Timer 258

Register 1: Watchdog Load (WDTLOAD), offset 0x000 262
Register 2: Watchdog Value (WDTVALUE), offset 0x004 263
Register 3: Watchdog Control (WDTCTL), offset 0x008 264
Register 4: Watchdog Interrupt Clear (WDTICR), offset 0x00C 265
Register 5: Watchdog Raw Interrupt Status (WDTRIS), offset 0x010 266
Register 6: Watchdog Masked Interrupt Status (WDTMIS), offset 0x014 267
Register 7: Watchdog Test (WDTTEST), offset 0x418 268
Register 8: Watchdog Lock (WDTLOCK), offset 0xC00 269
Register 9: Watchdog Peripheral Identification 4 (WDTPeriphID4), offset 0xFD0 270
Register 10: Watchdog Peripheral Identification 5 (WDTPeriphID5), offset 0xFD4 271
Register 11: Watchdog Peripheral Identification 6 (WDTPeriphID6), offset 0xFD8 272
Register 12: Watchdog Peripheral Identification 7 (WDTPeriphID7), offset 0xFDC 273
Register 13: Watchdog Peripheral Identification 0 (WDTPeriphID0), offset 0xFE0 274
Register 14: Watchdog Peripheral Identification 1 (WDTPeriphID1), offset 0xFE4 275
Register 15: Watchdog Peripheral Identification 2 (WDTPeriphID2), offset 0xFE8 276
Register 16: Watchdog Peripheral Identification 3 (WDTPeriphID3), offset 0xFEC 277
Register 17: Watchdog PrimeCell Identification 0 (WDTPCellID0), offset 0xFF0 278
Register 18: Watchdog PrimeCell Identification 1 (WDTPCellID1), offset 0xFF4 279
Register 19: Watchdog PrimeCell Identification 2 (WDTPCellID2), offset 0xFF8 280
Register 20: Watchdog PrimeCell Identification 3 (WDTPCellID3), offset 0xFFC 281

Analog-to-Digital Converter (ADC) 282

Register 1: ADC Active Sample Sequencer (ADCACTSS), offset 0x000 291
Register 2: ADC Raw Interrupt Status (ADCRIS), offset 0x004 292
Register 3: ADC Interrupt Mask (ADCIM), offset 0x008 293
Register 4: ADC Interrupt Status and Clear (ADCISC), offset 0x00C 294
Register 5: ADC Overflow Status (ADCOSTAT), offset 0x010 296
Register 6: ADC Event Multiplexer Select (ADCEMUX), offset 0x014 297

Register 7: ADC Underflow Status (ADCUSTAT), offset 0x018 300
Register 8: ADC Sample Sequencer Priority (ADCSSPRI), offset 0x020 301
Register 9: ADC Processor Sample Sequence Initiate (ADCPSSI), offset 0x028 303
Register 10: ADC Sample Averaging Control (ADCSAC), offset 0x030 304
Register 11: ADC Sample Sequence Input Multiplexer Select 0 (ADCSSMUX0), offset 0x040 305
Register 12: ADC Sample Sequence Control 0 (ADCSSCTL0), offset 0x044 307
Register 13: ADC Sample Sequence Result FIFO 0 (ADCSSFIFO0), offset 0x048 310
Register 14: ADC Sample Sequence Result FIFO 1 (ADCSSFIFO1), offset 0x068 310
Register 15: ADC Sample Sequence Result FIFO 2 (ADCSSFIFO2), offset 0x088 310
Register 16: ADC Sample Sequence Result FIFO 3 (ADCSSFIFO3), offset 0x0A8 310
Register 17: ADC Sample Sequence FIFO 0 Status (ADCSSFSTAT0), offset 0x04C 311
Register 18: ADC Sample Sequence FIFO 1 Status (ADCSSFSTAT1), offset 0x06C 311
Register 19: ADC Sample Sequence FIFO 2 Status (ADCSSFSTAT2), offset 0x08C 311
Register 20: ADC Sample Sequence FIFO 3 Status (ADCSSFSTAT3), offset 0x0AC 311
Register 21: ADC Sample Sequence Input Multiplexer Select 1 (ADCSSMUX1), offset 0x060 312
Register 22: ADC Sample Sequence Input Multiplexer Select 2 (ADCSSMUX2), offset 0x080 312
Register 23: ADC Sample Sequence Control 1 (ADCSSCTL1), offset 0x064 313
Register 24: ADC Sample Sequence Control 2 (ADCSSCTL2), offset 0x084 313
Register 25: ADC Sample Sequence Input Multiplexer Select 3 (ADCSSMUX3), offset 0x0A0 315
Register 26: ADC Sample Sequence Control 3 (ADCSSCTL3), offset 0x0A4 316
Register 27: ADC Test Mode Loopback (ADCTMLB), offset 0x100 317

Universal Asynchronous Receivers/Transmitters (UARTs) 318
Register 1: UART Data (UARTDR), offset 0x000 326
Register 2: UART Receive Status/Error Clear (UARTRSR/UARTECR), offset 0x004 328
Register 3: UART Flag (UARTFR), offset 0x018 330
Register 4: UART IrDA Low-Power Register (UARTILPR), offset 0x020 332
Register 5: UART Integer Baud-Rate Divisor (UARTIBRD), offset 0x024 333
Register 6: UART Fractional Baud-Rate Divisor (UARTFBRD), offset 0x028 334
Register 7: UART Line Control (UARTLCRH), offset 0x02C 335
Register 8: UART Control (UARTCTL), offset 0x030 337
Register 9: UART Interrupt FIFO Level Select (UARTIFLS), offset 0x034 339
Register 10: UART Interrupt Mask (UARTIM), offset 0x038 341
Register 11: UART Raw Interrupt Status (UARTRIS), offset 0x03C 343
Register 12: UART Masked Interrupt Status (UARTMIS), offset 0x040 344
Register 13: UART Interrupt Clear (UARTICR), offset 0x044 345
Register 14: UART Peripheral Identification 4 (UARTPeriphID4), offset 0xFD0 347
Register 15: UART Peripheral Identification 5 (UARTPeriphID5), offset 0xFD4 348
Register 16: UART Peripheral Identification 6 (UARTPeriphID6), offset 0xFD8 349
Register 17: UART Peripheral Identification 7 (UARTPeriphID7), offset 0xFDC 350
Register 18: UART Peripheral Identification 0 (UARTPeriphID0), offset 0xFE0 351
Register 19: UART Peripheral Identification 1 (UARTPeriphID1), offset 0xFE4 352
Register 20: UART Peripheral Identification 2 (UARTPeriphID2), offset 0xFE8 353
Register 21: UART Peripheral Identification 3 (UARTPeriphID3), offset 0xFEC 354
Register 22: UART PrimeCell Identification 0 (UARTPCellID0), offset 0xFF0 355
Register 23: UART PrimeCell Identification 1 (UARTPCellID1), offset 0xFF4 356
Register 24: UART PrimeCell Identification 2 (UARTPCellID2), offset 0xFF8 357
Register 25: UART PrimeCell Identification 3 (UARTPCellID3), offset 0xFFC 358

Synchronous Serial Interface (SSI) 359
Register 1: SSI Control 0 (SSICR0), offset 0x000 371
Register 2: SSI Control 1 (SSICR1), offset 0x004 373
Register 3: SSI Data (SSIDR), offset 0x008 375
Register 4: SSI Status (SSISR), offset 0x00C 376
Register 5: SSI Clock Prescale (SSICPSR), offset 0x010 378
Register 6: SSI Interrupt Mask (SSIIM), offset 0x014 379
Register 7: SSI Raw Interrupt Status (SSIRIS), offset 0x018 381
Register 8: SSI Masked Interrupt Status (SSIMIS), offset 0x01C 382
Register 9: SSI Interrupt Clear (SSIICR), offset 0x020 383
Register 10: SSI Peripheral Identification 4 (SSIPeriphID4), offset 0xFD0 384
Register 11: SSI Peripheral Identification 5 (SSIPeriphID5), offset 0xFD4 385
Register 12: SSI Peripheral Identification 6 (SSIPeriphID6), offset 0xFD8 386
Register 13: SSI Peripheral Identification 7 (SSIPeriphID7), offset 0xFDC 387
Register 14: SSI Peripheral Identification 0 (SSIPeriphID0), offset 0xFE0 388
Register 15: SSI Peripheral Identification 1 (SSIPeriphID1), offset 0xFE4 389
Register 16: SSI Peripheral Identification 2 (SSIPeriphID2), offset 0xFE8 390
Register 17: SSI Peripheral Identification 3 (SSIPeriphID3), offset 0xFEC 391
Register 18: SSI PrimeCell Identification 0 (SSIPCellID0), offset 0xFF0 392
Register 19: SSI PrimeCell Identification 1 (SSIPCellID1), offset 0xFF4 393
Register 20: SSI PrimeCell Identification 2 (SSIPCellID2), offset 0xFF8 394
Register 21: SSI PrimeCell Identification 3 (SSIPCellID3), offset 0xFFC 395

Inter-Integrated Circuit (I^2C) Interface 396
Register 1: I^2C Master Slave Address (I2CMSA), offset 0x000 411
Register 2: I^2C Master Control/Status (I2CMCS), offset 0x004 412
Register 3: I^2C Master Data (I2CMDR), offset 0x008 416
Register 4: I^2C Master Timer Period (I2CMTPR), offset 0x00C 417
Register 5: I^2C Master Interrupt Mask (I2CMIMR), offset 0x010 418
Register 6: I^2C Master Raw Interrupt Status (I2CMRIS), offset 0x014 419
Register 7: I^2C Master Masked Interrupt Status (I2CMMIS), offset 0x018 420
Register 8: I^2C Master Interrupt Clear (I2CMICR), offset 0x01C 421
Register 9: I^2C Master Configuration (I2CMCR), offset 0x020 422
Register 10: I^2C Slave Own Address (I2CSOAR), offset 0x000 424
Register 11: I^2C Slave Control/Status (I2CSCSR), offset 0x004 425
Register 12: I^2C Slave Data (I2CSDR), offset 0x008 427
Register 13: I^2C Slave Interrupt Mask (I2CSIMR), offset 0x00C 428
Register 14: I^2C Slave Raw Interrupt Status (I2CSRIS), offset 0x010 429
Register 15: I^2C Slave Masked Interrupt Status (I2CSMIS), offset 0x014 430
Register 16: I^2C Slave Interrupt Clear (I2CSICR), offset 0x018 431

Controller Area Network (CAN) Module 432
Register 1: CAN Control (CANCTL), offset 0x000 451
Register 2: CAN Status (CANSTS), offset 0x004 453
Register 3: CAN Error Counter (CANERR), offset 0x008 456
Register 4: CAN Bit Timing (CANBIT), offset 0x00C 457
Register 5: CAN Interrupt (CANINT), offset 0x010 459
Register 6: CAN Test (CANTST), offset 0x014 460
Register 7: CAN Baud Rate Prescaler Extension (CANBRPE), offset 0x018 462

Register 8: CAN IF1 Command Request (CANIF1CRQ), offset 0x020 463
Register 9: CAN IF2 Command Request (CANIF2CRQ), offset 0x080 463
Register 10: CAN IF1 Command Mask (CANIF1CMSK), offset 0x024 464
Register 11: CAN IF2 Command Mask (CANIF2CMSK), offset 0x084 464
Register 12: CAN IF1 Mask 1 (CANIF1MSK1), offset 0x028 466
Register 13: CAN IF2 Mask 1 (CANIF2MSK1), offset 0x088 466
Register 14: CAN IF1 Mask 2 (CANIF1MSK2), offset 0x02C 467
Register 15: CAN IF2 Mask 2 (CANIF2MSK2), offset 0x08C 467
Register 16: CAN IF1 Arbitration 1 (CANIF1ARB1), offset 0x030 468
Register 17: CAN IF2 Arbitration 1 (CANIF2ARB1), offset 0x090 468
Register 18: CAN IF1 Arbitration 2 (CANIF1ARB2), offset 0x034 469
Register 19: CAN IF2 Arbitration 2 (CANIF2ARB2), offset 0x094 469
Register 20: CAN IF1 Message Control (CANIF1MCTL), offset 0x038 471
Register 21: CAN IF2 Message Control (CANIF2MCTL), offset 0x098 471
Register 22: CAN IF1 Data A1 (CANIF1DA1), offset 0x03C 473
Register 23: CAN IF1 Data A2 (CANIF1DA2), offset 0x040 473
Register 24: CAN IF1 Data B1 (CANIF1DB1), offset 0x044 473
Register 25: CAN IF1 Data B2 (CANIF1DB2), offset 0x048 473
Register 26: CAN IF2 Data A1 (CANIF2DA1), offset 0x09C 473
Register 27: CAN IF2 Data A2 (CANIF2DA2), offset 0x0A0 473
Register 28: CAN IF2 Data B1 (CANIF2DB1), offset 0x0A4 473
Register 29: CAN IF2 Data B2 (CANIF2DB2), offset 0x0A8 473
Register 30: CAN Transmission Request 1 (CANTXRQ1), offset 0x100 474
Register 31: CAN Transmission Request 2 (CANTXRQ2), offset 0x104 474
Register 32: CAN New Data 1 (CANNWDA1), offset 0x120 475
Register 33: CAN New Data 2 (CANNWDA2), offset 0x124 475
Register 34: CAN Message 1 Interrupt Pending (CANMSG1INT), offset 0x140 476
Register 35: CAN Message 2 Interrupt Pending (CANMSG2INT), offset 0x144 476
Register 36: CAN Message 1 Valid (CANMSG1VAL), offset 0x160 477
Register 37: CAN Message 2 Valid (CANMSG2VAL), offset 0x164 477

Ethernet Controller 478

Register 1: Ethernet MAC Raw Interrupt Status/Acknowledge (MACRIS/MACIACK), offset 0x000 489
Register 2: Ethernet MAC Interrupt Mask (MACIM), offset 0x004 492
Register 3: Ethernet MAC Receive Control (MACRCTL), offset 0x008 493
Register 4: Ethernet MAC Transmit Control (MACTCTL), offset 0x00C 494
Register 5: Ethernet MAC Data (MACDATA), offset 0x010 495
Register 6: Ethernet MAC Individual Address 0 (MACIA0), offset 0x014 497
Register 7: Ethernet MAC Individual Address 1 (MACIA1), offset 0x018 498
Register 8: Ethernet MAC Threshold (MACTHR), offset 0x01C 499
Register 9: Ethernet MAC Management Control (MACMCTL), offset 0x020 501
Register 10: Ethernet MAC Management Divider (MACMDV), offset 0x024 502
Register 11: Ethernet MAC Management Transmit Data (MACMTXD), offset 0x02C 503
Register 12: Ethernet MAC Management Receive Data (MACMRXD), offset 0x030 504
Register 13: Ethernet MAC Number of Packets (MACNP), offset 0x034 505
Register 14: Ethernet MAC Transmission Request (MACTR), offset 0x038 506
Register 15: Ethernet MAC Timer Support (MACTS), offset 0x03C 507
Register 16: Ethernet PHY Management Register 0 – Control (MR0), address 0x00 508
Register 17: Ethernet PHY Management Register 1 – Status (MR1), address 0x01 510

Register 18: Ethernet PHY Management Register 2 – PHY Identifier 1 (MR2), address 0x02 512
Register 19: Ethernet PHY Management Register 3 – PHY Identifier 2 (MR3), address 0x03 513
Register 20: Ethernet PHY Management Register 4 – Auto-Negotiation Advertisement (MR4), address 0x04 514
Register 21: Ethernet PHY Management Register 5 – Auto-Negotiation Link Partner Base Page Ability (MR5), address 0x05 516
Register 22: Ethernet PHY Management Register 6 – Auto-Negotiation Expansion (MR6), address 0x06 517
Register 23: Ethernet PHY Management Register 16 – Vendor-Specific (MR16), address 0x10 518
Register 24: Ethernet PHY Management Register 17 – Interrupt Control/Status (MR17), address 0x11 520
Register 25: Ethernet PHY Management Register 18 – Diagnostic (MR18), address 0x12 522
Register 26: Ethernet PHY Management Register 19 – Transceiver Control (MR19), address 0x13 523
Register 27: Ethernet PHY Management Register 23 – LED Configuration (MR23), address 0x17 524
Register 28: Ethernet PHY Management Register 24 –MDI/MDIX Control (MR24), address 0x18 525

Analog Comparator 526
Register 1: Analog Comparator Masked Interrupt Status (ACMIS), offset 0x000 530
Register 2: Analog Comparator Raw Interrupt Status (ACRIS), offset 0x004 531
Register 3: Analog Comparator Interrupt Enable (ACINTEN), offset 0x008 532
Register 4: Analog Comparator Reference Voltage Control (ACREFCTL), offset 0x010 533
Register 5: Analog Comparator Status 0 (ACSTAT0), offset 0x020 534
Register 6: Analog Comparator Control 0 (ACCTL0), offset 0x024 535

Pulse Width Modulator (PWM) 537
Register 1: PWM Master Control (PWMCTL), offset 0x000 546
Register 2: PWM Time Base Sync (PWMSYNC), offset 0x004 547
Register 3: PWM Output Enable (PWMENABLE), offset 0x008 548
Register 4: PWM Output Inversion (PWMINVERT), offset 0x00C 549
Register 5: PWM Output Fault (PWMFAULT), offset 0x010 550
Register 6: PWM Interrupt Enable (PWMINTEN), offset 0x014 551
Register 7: PWM Raw Interrupt Status (PWMRIS), offset 0x018 552
Register 8: PWM Interrupt Status and Clear (PWMISC), offset 0x01C 553
Register 9: PWM Status (PWMSTATUS), offset 0x020 554
Register 10: PWM0 Control (PWM0CTL), offset 0x040 555
Register 11: PWM1 Control (PWM1CTL), offset 0x080 555
Register 12: PWM2 Control (PWM2CTL), offset 0x0C0 555
Register 13: PWM0 Interrupt and Trigger Enable (PWM0INTEN), offset 0x044 557
Register 14: PWM1 Interrupt and Trigger Enable (PWM1INTEN), offset 0x084 557
Register 15: PWM2 Interrupt and Trigger Enable (PWM2INTEN), offset 0x0C4 557
Register 16: PWM0 Raw Interrupt Status (PWM0RIS), offset 0x048 559
Register 17: PWM1 Raw Interrupt Status (PWM1RIS), offset 0x088 559
Register 18: PWM2 Raw Interrupt Status (PWM2RIS), offset 0x0C8 559
Register 19: PWM0 Interrupt Status and Clear (PWM0ISC), offset 0x04C 560
Register 20: PWM1 Interrupt Status and Clear (PWM1ISC), offset 0x08C 560
Register 21: PWM2 Interrupt Status and Clear (PWM2ISC), offset 0x0CC 560
Register 22: PWM0 Load (PWM0LOAD), offset 0x050 561
Register 23: PWM1 Load (PWM1LOAD), offset 0x090 561
Register 24: PWM2 Load (PWM2LOAD), offset 0x0D0 561
Register 25: PWM0 Counter (PWM0COUNT), offset 0x054 562

Register 26: PWM1 Counter (PWM1COUNT), offset 0x094 562
Register 27: PWM2 Counter (PWM2COUNT), offset 0x0D4 562
Register 28: PWM0 Compare A (PWM0CMPA), offset 0x058 563
Register 29: PWM1 Compare A (PWM1CMPA), offset 0x098 563
Register 30: PWM2 Compare A (PWM2CMPA), offset 0x0D8 563
Register 31: PWM0 Compare B (PWM0CMPB), offset 0x05C 564
Register 32: PWM1 Compare B (PWM1CMPB), offset 0x09C 564
Register 33: PWM2 Compare B (PWM2CMPB), offset 0x0DC 564
Register 34: PWM0 Generator A Control (PWM0GENA), offset 0x060 565
Register 35: PWM1 Generator A Control (PWM1GENA), offset 0x0A0 565
Register 36: PWM2 Generator A Control (PWM2GENA), offset 0x0E0 565
Register 37: PWM0 Generator B Control (PWM0GENB), offset 0x064 568
Register 38: PWM1 Generator B Control (PWM1GENB), offset 0x0A4 568
Register 39: PWM2 Generator B Control (PWM2GENB), offset 0x0E4 568
Register 40: PWM0 Dead-Band Control (PWM0DBCTL), offset 0x068 571
Register 41: PWM1 Dead-Band Control (PWM1DBCTL), offset 0x0A8 571
Register 42: PWM2 Dead-Band Control (PWM2DBCTL), offset 0x0E8 571
Register 43: PWM0 Dead-Band Rising-Edge Delay (PWM0DBRISE), offset 0x06C 572
Register 44: PWM1 Dead-Band Rising-Edge Delay (PWM1DBRISE), offset 0x0AC 572
Register 45: PWM2 Dead-Band Rising-Edge Delay (PWM2DBRISE), offset 0x0EC 572
Register 46: PWM0 Dead-Band Falling-Edge-Delay (PWM0DBFALL), offset 0x070 573
Register 47: PWM1 Dead-Band Falling-Edge-Delay (PWM1DBFALL), offset 0x0B0 573
Register 48: PWM2 Dead-Band Falling-Edge-Delay (PWM2DBFALL), offset 0x0F0 573

Quadrature Encoder Interface (QEI) 574

Register 1: QEI Control (QEICTL), offset 0x000 579
Register 2: QEI Status (QEISTAT), offset 0x004 581
Register 3: QEI Position (QEIPOS), offset 0x008 582
Register 4: QEI Maximum Position (QEIMAXPOS), offset 0x00C 583
Register 5: QEI Timer Load (QEILOAD), offset 0x010 584
Register 6: QEI Timer (QEITIME), offset 0x014 585
Register 7: QEI Velocity Counter (QEICOUNT), offset 0x018 586
Register 8: QEI Velocity (QEISPEED), offset 0x01C 587
Register 9: QEI Interrupt Enable (QEIINTEN), offset 0x020 588
Register 10: QEI Raw Interrupt Status (QEIRIS), offset 0x024 589
Register 11: QEI Interrupt Status and Clear (QEIISC), offset 0x028 590

Revision History

The revision history table notes changes made between the indicated revisions of the LM3S8962 data sheet.

Table 1. Revision History

Date	Revision	Description
March 2008	2550	Started tracking revision history.
April 2008	2881	■ The Θ_{JA} value was changed from 55.3 to 34 in the "Thermal Characteristics" table in the Operating Characteristics chapter. ■ Bit 31 of the **DC3** register was incorrectly described in prior versions of the data sheet. A reset of 1 indicates that an even CCP pin is present and can be used as a 32-KHz input clock. ■ Values for $I_{DD_HIBERNATE}$ were added to the "Detailed Power Specifications" table in the "Electrical Characteristics" chapter. ■ The "Hibernation Module DC Electricals" table was added to the "Electrical Characteristics" chapter. ■ The $T_{VDDRISE}$ parameter in the "Reset Characteristics" table in the "Electrical Characteristics" chapter was changed from a max of 100 to 250. ■ The maximum value on Core supply voltage (V_{DD25}) in the "Maximum Ratings" table in the "Electrical Characteristics" chapter was changed from 4 to 3. ■ The operational frequency of the internal 30-kHz oscillator clock source is 30 kHz ± 50% (prior data sheets incorrectly noted it as 30 kHz ± 30%). ■ A value of 0x3 in bits 5:4 of the **MISC** register (`OSCSRC`) indicates the 30-KHz internal oscillator is the input source for the oscillator. Prior data sheets incorrectly noted 0x3 as a reserved value. ■ The reset for bits 6:4 of the **RCC2** register (`OSCSRC2`) is 0x1 (IOSC). Prior data sheets incorrectly noted the reset was 0x0 (MOSC). ■ Two figures on clock source were added to the "Hibernation Module": – Clock Source Using Crystal – Clock Source Using Dedicated Oscillator ■ The following notes on battery management were added to the "Hibernation Module" chapter: – Battery voltage is not measured while in Hibernate mode. – System level factors may affect the accuracy of the low battery detect circuit. The designer should consider battery type, discharge characteristics, and a test load during battery voltage measurements. ■ A note on high-current applications was added to the GPIO chapter: For special high-current applications, the GPIO output buffers may be used with the following restrictions. With the GPIO pins configured as 8-mA output drivers, a total of four GPIO outputs may be used to sink current loads up to 18 mA each. At 18-mA sink current loading, the VOL value is specified as 1.2 V. The high-current GPIO package pins must be selected such that there are only a maximum of two per side of the physical package or BGA pin group with the total number of high-current GPIO outputs not exceeding four for the entire package. ■ A note on Schmitt inputs was added to the GPIO chapter: Pins configured as digital inputs are Schmitt-triggered. ■ The Buffer type on the `WAKE` pin changed from OD to - in the Signal Tables.

Date	Revision	Description
		■ The "Differential Sampling Range" figures in the ADC chapter were clarified. ■ The last revision of the data sheet (revision 2550) introduced two errors that have now been corrected: – The LQFP pin diagrams and pin tables were missing the comparator positive and negative input pins. – The base address was listed incorrectly in the **FMPRE0** and **FMPPE0** register bit diagrams. ■ Additional minor data sheet clarifications and corrections.
May 2008	2972	■ The 108-Ball BGA pin diagram and pin tables had an error. The following signals were erroneously indicated as available and have now been changed to a No Connect (NC): – Ball C1: Changed `PE7` to NC – Ball C2: Changed `PE6` to NC – Ball D2: Changed `PE5` to NC – Ball D1: Changed `PE4` to NC ■ As noted in the PCN, three of the nine Ethernet LED configuration options are no longer supported: TX Activity (0x2), RX Activity (0x3), and Collision (0x4). These values for the `LED0` and `LED1` bit fields in the **MR23** register are now marked as reserved. ■ As noted in the PCN, the option to provide `VDD25` power from external sources was removed. Use the `LDO` output as the source of `VDD25` input. ■ As noted in the PCN, pin 41 (ball K3 on the BGA package) was renamed from `GNDPHY` to `ERBIAS`. A 12.4-kΩ resistor should be connected between `ERBIAS` and ground to accommodate future device revisions (see “Functional Description” on page 479). ■ Additional minor data sheet clarifications and corrections.
July 2008	3108	■ Corrected resistor value in `ERBIAS` signal description. ■ Additional minor data sheet clarifications and corrections.
August 2008	3447	■ Added note on clearing interrupts to Interrupts chapter. ■ Added Power Architecture diagram to System Control chapter. ■ Additional minor data sheet clarifications and corrections.
October 2008	4149	■ Corrected values for `DSOSCSRC` bit field in **Deep Sleep Clock Configuration (DSLPCLKCFG)** register. ■ The `FMA` value for the **FMPRE3** register was incorrect in the Flash Resident Registers table in the Internal Memory chapter. The correct value is 0x0000.0006. ■ In the CAN chapter, major improvements were made including a rewrite of the conceptual information and the addition of new figures to clarify how to use the Controller Area Network (CAN) module. ■ In the Ethernet chapter, major improvements were made including a rewrite of the conceptual information and the addition of new figures to clarify how to use the Ethernet Controller interface. ■ Incorrect Comparator Operating Modes tables were removed from the Analog Comparators chapter.
November 2008	4283	■ Revised High-Level Block Diagram. ■ Additional minor data sheet clarifications and corrections were made.

Date	Revision	Description
January 2009	4660	■ Corrected bit type for RELOAD bit field in SysTick Reload Value register; changed to R/W. ■ Clarification added as to what happens when the SSI in slave mode is required to transmit but there is no data in the TX FIFO. ■ Corrected bit timing examples in CAN chapter. ■ Added "Hardware Configuration" section to Ethernet Controller chapter. ■ Additional minor data sheet clarifications and corrections.
April 2009	5367	■ Added JTAG/SWD clarification (see “Communication with JTAG/SWD” on page 65). ■ Added clarification that the PLL operates at 400 MHz, but is divided by two prior to the application of the output divisor. ■ Added "GPIO Module DC Characteristics" table (see Table 24-4 on page 622). ■ Additional minor data sheet clarifications and corrections.

About This Document

This data sheet provides reference information for the LM3S8962 microcontroller, describing the functional blocks of the system-on-chip (SoC) device designed around the ARM® Cortex™-M3 core.

Audience

This manual is intended for system software developers, hardware designers, and application developers.

About This Manual

This document is organized into sections that correspond to each major feature.

Related Documents

The following documents are referenced by the data sheet, and available on the documentation CD or from the Luminary Micro web site at www.luminarymicro.com:

- *ARM® Cortex™-M3 Technical Reference Manual*
- *ARM® CoreSight Technical Reference Manual*
- *ARM® v7-M Architecture Application Level Reference Manual*
- *Stellaris® Peripheral Driver Library User's Guide*
- *Stellaris® ROM User's Guide*

The following related documents are also referenced:

- *IEEE Standard 1149.1-Test Access Port and Boundary-Scan Architecture*

This documentation list was current as of publication date. Please check the Luminary Micro web site for additional documentation, including application notes and white papers.

Documentation Conventions

This document uses the conventions shown in Table 2 on page 25.

Table 2. Documentation Conventions

Notation	Meaning
General Register Notation	
REGISTER	APB registers are indicated in uppercase bold. For example, **PBORCTL** is the Power-On and Brown-Out Reset Control register. If a register name contains a lowercase n, it represents more than one register. For example, **SRCRn** represents any (or all) of the three Software Reset Control registers: **SRCR0, SRCR1** , and **SRCR2**.
bit	A single bit in a register.
bit field	Two or more consecutive and related bits.
offset 0x*nnn*	A hexadecimal increment to a register's address, relative to that module's base address as specified in "Memory Map" on page 53.

Notation	Meaning
Register *N*	Registers are numbered consecutively throughout the document to aid in referencing them. The register number has no meaning to software.
reserved	Register bits marked *reserved* are reserved for future use. In most cases, reserved bits are set to 0; however, user software should not rely on the value of a reserved bit. To provide software compatibility with future products, the value of a reserved bit should be preserved across a read-modify-write operation.
yy:xx	The range of register bits inclusive from xx to yy. For example, 31:15 means bits 15 through 31 in that register.
Register Bit/Field Types	This value in the register bit diagram indicates whether software running on the controller can change the value of the bit field.
RC	Software can read this field. The bit or field is cleared by hardware after reading the bit/field.
RO	Software can read this field. Always write the chip reset value.
R/W	Software can read or write this field.
R/W1C	Software can read or write this field. A write of a 0 to a W1C bit does not affect the bit value in the register. A write of a 1 clears the value of the bit in the register; the remaining bits remain unchanged. This register type is primarily used for clearing interrupt status bits where the read operation provides the interrupt status and the write of the read value clears only the interrupts being reported at the time the register was read.
R/W1S	Software can read or write a 1 to this field. A write of a 0 to a R/W1S bit does not affect the bit value in the register.
W1C	Software can write this field. A write of a 0 to a W1C bit does not affect the bit value in the register. A write of a 1 clears the value of the bit in the register; the remaining bits remain unchanged. A read of the register returns no meaningful data. This register is typically used to clear the corresponding bit in an interrupt register.
WO	Only a write by software is valid; a read of the register returns no meaningful data.
Register Bit/Field Reset Value	This value in the register bit diagram shows the bit/field value after any reset, unless noted.
0	Bit cleared to 0 on chip reset.
1	Bit set to 1 on chip reset.
-	Nondeterministic.
Pin/Signal Notation	
[ ]	Pin alternate function; a pin defaults to the signal without the brackets.
pin	Refers to the physical connection on the package.
signal	Refers to the electrical signal encoding of a pin.
assert a signal	Change the value of the signal from the logically False state to the logically True state. For active High signals, the asserted signal value is 1 (High); for active Low signals, the asserted signal value is 0 (Low). The active polarity (High or Low) is defined by the signal name (see `SIGNAL` and $\overline{\texttt{SIGNAL}}$ below).
deassert a signal	Change the value of the signal from the logically True state to the logically False state.
$\overline{\texttt{SIGNAL}}$	Signal names are in uppercase and in the Courier font. An overbar on a signal name indicates that it is active Low. To assert $\overline{\texttt{SIGNAL}}$ is to drive it Low; to deassert $\overline{\texttt{SIGNAL}}$ is to drive it High.
`SIGNAL`	Signal names are in uppercase and in the Courier font. An active High signal has no overbar. To assert `SIGNAL` is to drive it High; to deassert `SIGNAL` is to drive it Low.
Numbers	
X	An uppercase X indicates any of several values is allowed, where X can be any legal pattern. For example, a binary value of 0X00 can be either 0100 or 0000, a hex value of 0xX is 0x0 or 0x1, and so on.

Notation	Meaning
0x	Hexadecimal numbers have a prefix of 0x. For example, 0x00FF is the hexadecimal number FF. All other numbers within register tables are assumed to be binary. Within conceptual information, binary numbers are indicated with a b suffix, for example, 1011b, and decimal numbers are written without a prefix or suffix.

1 Architectural Overview

The Luminary Micro Stellaris® family of microcontrollers—the first ARM® Cortex™-M3 based controllers—brings high-performance 32-bit computing to cost-sensitive embedded microcontroller applications. These pioneering parts deliver customers 32-bit performance at a cost equivalent to legacy 8- and 16-bit devices, all in a package with a small footprint.

The Stellaris® family offers efficient performance and extensive integration, favorably positioning the device into cost-conscious applications requiring significant control-processing and connectivity capabilities. The Stellaris® LM3S8000 series combines Bosch Controller Area Network technology with both a 10/100 Ethernet Media Access Control (MAC) and Physical (PHY) layer.

The LM3S8962 microcontroller is targeted for industrial applications, including remote monitoring, electronic point-of-sale machines, test and measurement equipment, network appliances and switches, factory automation, HVAC and building control, gaming equipment, motion control, medical instrumentation, and fire and security.

For applications requiring extreme conservation of power, the LM3S8962 microcontroller features a battery-backed Hibernation module to efficiently power down the LM3S8962 to a low-power state during extended periods of inactivity. With a power-up/power-down sequencer, a continuous time counter (RTC), a pair of match registers, an APB interface to the system bus, and dedicated non-volatile memory, the Hibernation module positions the LM3S8962 microcontroller perfectly for battery applications.

In addition, the LM3S8962 microcontroller offers the advantages of ARM's widely available development tools, System-on-Chip (SoC) infrastructure IP applications, and a large user community. Additionally, the microcontroller uses ARM's Thumb®-compatible Thumb-2 instruction set to reduce memory requirements and, thereby, cost. Finally, the LM3S8962 microcontroller is code-compatible to all members of the extensive Stellaris® family; providing flexibility to fit our customers' precise needs.

Luminary Micro offers a complete solution to get to market quickly, with evaluation and development boards, white papers and application notes, an easy-to-use peripheral driver library, and a strong support, sales, and distributor network. See “Ordering and Contact Information” on page 668 for ordering information for Stellaris® family devices.

1.1 Product Features

The LM3S8962 microcontroller includes the following product features:

- 32-Bit RISC Performance
  - 32-bit ARM® Cortex™-M3 v7M architecture optimized for small-footprint embedded applications
  - System timer (SysTick), providing a simple, 24-bit clear-on-write, decrementing, wrap-on-zero counter with a flexible control mechanism
  - Thumb®-compatible Thumb-2-only instruction set processor core for high code density
  - 50-MHz operation
  - Hardware-division and single-cycle-multiplication

- Integrated Nested Vectored Interrupt Controller (NVIC) providing deterministic interrupt handling
- 36 interrupts with eight priority levels
- Memory protection unit (MPU), providing a privileged mode for protected operating system functionality
- Unaligned data access, enabling data to be efficiently packed into memory
- Atomic bit manipulation (bit-banding), delivering maximum memory utilization and streamlined peripheral control

■ ARM® Cortex™-M3 Processor Core

- Compact core.
- Thumb-2 instruction set, delivering the high-performance expected of an ARM core in the memory size usually associated with 8- and 16-bit devices; typically in the range of a few kilobytes of memory for microcontroller class applications.
- Rapid application execution through Harvard architecture characterized by separate buses for instruction and data.
- Exceptional interrupt handling, by implementing the register manipulations required for handling an interrupt in hardware.
- Deterministic, fast interrupt processing: always 12 cycles, or just 6 cycles with tail-chaining
- Memory protection unit (MPU) to provide a privileged mode of operation for complex applications.
- Migration from the ARM7™ processor family for better performance and power efficiency.
- Full-featured debug solution
  - Serial Wire JTAG Debug Port (SWJ-DP)
  - Flash Patch and Breakpoint (FPB) unit for implementing breakpoints
  - Data Watchpoint and Trigger (DWT) unit for implementing watchpoints, trigger resources, and system profiling
  - Instrumentation Trace Macrocell (ITM) for support of printf style debugging
  - Trace Port Interface Unit (TPIU) for bridging to a Trace Port Analyzer
- Optimized for single-cycle flash usage
- Three sleep modes with clock gating for low power
- Single-cycle multiply instruction and hardware divide
- Atomic operations
- ARM Thumb2 mixed 16-/32-bit instruction set

  - 1.25 DMIPS/MHz
- JTAG
  - IEEE 1149.1-1990 compatible Test Access Port (TAP) controller
  - Four-bit Instruction Register (IR) chain for storing JTAG instructions
  - IEEE standard instructions: BYPASS, IDCODE, SAMPLE/PRELOAD, EXTEST and INTEST
  - ARM additional instructions: APACC, DPACC and ABORT
  - Integrated ARM Serial Wire Debug (SWD)
- Hibernation
  - System power control using discrete external regulator
  - Dedicated pin for waking from an external signal
  - Low-battery detection, signaling, and interrupt generation
  - 32-bit real-time counter (RTC)
  - Two 32-bit RTC match registers for timed wake-up and interrupt generation
  - Clock source from a 32.768-kHz external oscillator or a 4.194304-MHz crystal
  - RTC predivider trim for making fine adjustments to the clock rate
  - 64 32-bit words of non-volatile memory
  - Programmable interrupts for RTC match, external wake, and low battery events
- Internal Memory
  - 256 KB single-cycle flash
    - User-managed flash block protection on a 2-KB block basis
    - User-managed flash data programming
    - User-defined and managed flash-protection block
  - 64 KB single-cycle SRAM
- GPIOs
  - 5-42 GPIOs, depending on configuration
  - 5-V-tolerant input/outputs
  - Programmable control for GPIO interrupts
    - Interrupt generation masking
    - Edge-triggered on rising, falling, or both

    - Level-sensitive on High or Low values
  - Bit masking in both read and write operations through address lines
  - Can initiate an ADC sample sequence
  - Pins configured as digital inputs are Schmitt-triggered.
  - Programmable control for GPIO pad configuration
    - Weak pull-up or pull-down resistors
    - 2-mA, 4-mA, and 8-mA pad drive for digital communication; up to four pads can be configured with an 18-mA pad drive for high-current applications
    - Slew rate control for the 8-mA drive
    - Open drain enables
    - Digital input enables
- General-Purpose Timers
  - Four General-Purpose Timer Modules (GPTM), each of which provides two 16-bit timers. Each GPTM can be configured to operate independently:
    - As a single 32-bit timer
    - As one 32-bit Real-Time Clock (RTC) to event capture
    - For Pulse Width Modulation (PWM)
    - To trigger analog-to-digital conversions
  - 32-bit Timer modes
    - Programmable one-shot timer
    - Programmable periodic timer
    - Real-Time Clock when using an external 32.768-KHz clock as the input
    - Software-controlled event stalling (excluding RTC mode)
    - ADC event trigger
  - 16-bit Timer modes
    - General-purpose timer function with an 8-bit prescaler (for one-shot and periodic modes only)
    - Programmable one-shot timer
    - Programmable periodic timer
    - User-enabled stalling when the controller asserts CPU Halt flag during debug

    - ADC event trigger
  - 16-bit Input Capture modes
    - Input edge count capture
    - Input edge time capture
  - 16-bit PWM mode
    - Simple PWM mode with software-programmable output inversion of the PWM signal
- ARM FiRM-compliant Watchdog Timer
  - 32-bit down counter with a programmable load register
  - Separate watchdog clock with an enable
  - Programmable interrupt generation logic with interrupt masking
  - Lock register protection from runaway software
  - Reset generation logic with an enable/disable
  - User-enabled stalling when the controller asserts the CPU Halt flag during debug
- ADC
  - Four analog input channels
  - Single-ended and differential-input configurations
  - On-chip internal temperature sensor
  - Sample rate of 500 thousand samples/second
  - Flexible, configurable analog-to-digital conversion
  - Four programmable sample conversion sequences from one to eight entries long, with corresponding conversion result FIFOs
  - Flexible trigger control
    - Controller (software)
    - Timers
    - Analog Comparators
    - PWM
    - GPIO
  - Hardware averaging of up to 64 samples for improved accuracy
  - Converter uses an internal 3-V reference

  - Power and ground for the analog circuitry is separate from the digital power and ground
- UART
  - Two fully programmable 16C550-type UARTs with IrDA support
  - Separate 16x8 transmit (TX) and receive (RX) FIFOs to reduce CPU interrupt service loading
  - Programmable baud-rate generator allowing speeds up to 3.125 Mbps
  - Programmable FIFO length, including 1-byte deep operation providing conventional double-buffered interface
  - FIFO trigger levels of 1/8, 1/4, 1/2, 3/4, and 7/8
  - Standard asynchronous communication bits for start, stop, and parity
  - False-start bit detection
  - Line-break generation and detection
  - Fully programmable serial interface characteristics
    - 5, 6, 7, or 8 data bits
    - Even, odd, stick, or no-parity bit generation/detection
    - 1 or 2 stop bit generation
  - IrDA serial-IR (SIR) encoder/decoder providing
    - Programmable use of IrDA Serial Infrared (SIR) or UART input/output
    - Support of IrDA SIR encoder/decoder functions for data rates up to 115.2 Kbps half-duplex
    - Support of normal 3/16 and low-power (1.41-2.23 µs) bit durations
    - Programmable internal clock generator enabling division of reference clock by 1 to 256 for low-power mode bit duration
- Synchronous Serial Interface (SSI)
  - Master or slave operation
  - Programmable clock bit rate and prescale
  - Separate transmit and receive FIFOs, 16 bits wide, 8 locations deep
  - Programmable interface operation for Freescale SPI, MICROWIRE, or Texas Instruments synchronous serial interfaces
  - Programmable data frame size from 4 to 16 bits
  - Internal loopback test mode for diagnostic/debug testing
- I^2C

- Devices on the I^2C bus can be designated as either a master or a slave
  - Supports both sending and receiving data as either a master or a slave
  - Supports simultaneous master and slave operation
- Four I^2C modes
  - Master transmit
  - Master receive
  - Slave transmit
  - Slave receive
- Two transmission speeds: Standard (100 Kbps) and Fast (400 Kbps)
- Master and slave interrupt generation
  - Master generates interrupts when a transmit or receive operation completes (or aborts due to an error)
  - Slave generates interrupts when data has been sent or requested by a master
- Master with arbitration and clock synchronization, multimaster support, and 7-bit addressing mode

■ Controller Area Network (CAN)

- CAN protocol version 2.0 part A/B
- Bit rates up to 1 Mbps
- 32 message objects with individual identifier masks
- Maskable interrupt
- Disable Automatic Retransmission mode for Time-Triggered CAN (TTCAN) applications
- Programmable Loopback mode for self-test operation
- Programmable FIFO mode enables storage of multiple message objects
- Gluelessly attaches to an external CAN interface through the `CANnTX` and `CANnRX` signals

■ 10/100 Ethernet Controller

- Conforms to the *IEEE 802.3-2002 specification*
  - 10BASE-T/100BASE-TX IEEE-802.3 compliant. Requires only a dual 1:1 isolation transformer interface to the line
  - 10BASE-T/100BASE-TX ENDEC, 100BASE-TX scrambler/descrambler
  - Full-featured auto-negotiation

- Multiple operational modes
  - Full- and half-duplex 100 Mbps
  - Full- and half-duplex 10 Mbps
  - Power-saving and power-down modes
- Highly configurable
  - Programmable MAC address
  - LED activity selection
  - Promiscuous mode support
  - CRC error-rejection control
  - User-configurable interrupts
- Physical media manipulation
  - Automatic MDI/MDI-X cross-over correction
  - Register-programmable transmit amplitude
  - Automatic polarity correction and 10BASE-T signal reception
- IEEE 1588 Precision Time Protocol - provides highly accurate time stamps for individual packets

- Analog Comparators
  - One integrated analog comparator
  - Configurable for output to drive an output pin, generate an interrupt, or initiate an ADC sample sequence
  - Compare external pin input to external pin input or to internal programmable voltage reference
  - Compare a test voltage against any one of these voltages
    - An individual external reference voltage
    - A shared single external reference voltage
    - A shared internal reference voltage

- PWM
  - Three PWM generator blocks, each with one 16-bit counter, two PWM comparators, a PWM signal generator, a dead-band generator, and an interrupt/ADC-trigger selector
  - One 16-bit counter
    - Runs in Down or Up/Down mode

    - Output frequency controlled by a 16-bit load value
    - Load value updates can be synchronized
    - Produces output signals at zero and load value
  - Two PWM comparators
    - Comparator value updates can be synchronized
    - Produces output signals on match
  - PWM generator
    - Output PWM signal is constructed based on actions taken as a result of the counter and PWM comparator output signals
    - Produces two independent PWM signals
  - Dead-band generator
    - Produces two PWM signals with programmable dead-band delays suitable for driving a half-H bridge
    - Can be bypassed, leaving input PWM signals unmodified
  - Flexible output control block with PWM output enable of each PWM signal
    - PWM output enable of each PWM signal
    - Optional output inversion of each PWM signal (polarity control)
    - Optional fault handling for each PWM signal
    - Synchronization of timers in the PWM generator blocks
    - Synchronization of timer/comparator updates across the PWM generator blocks
    - Interrupt status summary of the PWM generator blocks
  - Can initiate an ADC sample sequence
- QEI
  - Two QEI modules, each with the following features:
  - Position integrator that tracks the encoder position
  - Velocity capture using built-in timer
  - The input frequency of the QEI inputs may be as high as 1/4 of the processor frequency (for example, 12.5 MHz for a 50-MHz system)
  - Interrupt generation on:
    - Index pulse

    - Velocity-timer expiration
    - Direction change
    - Quadrature error detection
- Power
  - On-chip Low Drop-Out (LDO) voltage regulator, with programmable output user-adjustable from 2.25 V to 2.75 V
  - Hibernation module handles the power-up/down 3.3 V sequencing and control for the core digital logic and analog circuits
  - Low-power options on controller: Sleep and Deep-sleep modes
  - Low-power options for peripherals: software controls shutdown of individual peripherals
  - 3.3-V supply brown-out detection and reporting via interrupt or reset
- Flexible Reset Sources
  - Power-on reset (POR)
  - Reset pin assertion
  - Brown-out (BOR) detector alerts to system power drops
  - Software reset
  - Watchdog timer reset
  - Internal low drop-out (LDO) regulator output goes unregulated
- Industrial and extended temperature 100-pin RoHS-compliant LQFP package
- Industrial-range 108-ball RoHS-compliant BGA package

1.2 Target Applications

- Remote monitoring
- Electronic point-of-sale (POS) machines
- Test and measurement equipment
- Network appliances and switches
- Factory automation
- HVAC and building control
- Gaming equipment
- Motion control

- Medical instrumentation
- Fire and security
- Power and energy
- Transportation

1.3 High-Level Block Diagram

Figure 1-1 on page 39 depicts the features on the Stellaris® LM3S8962 microcontroller.

Figure 1-1. Stellaris® LM3S8962 Microcontroller High-Level Block Diagram

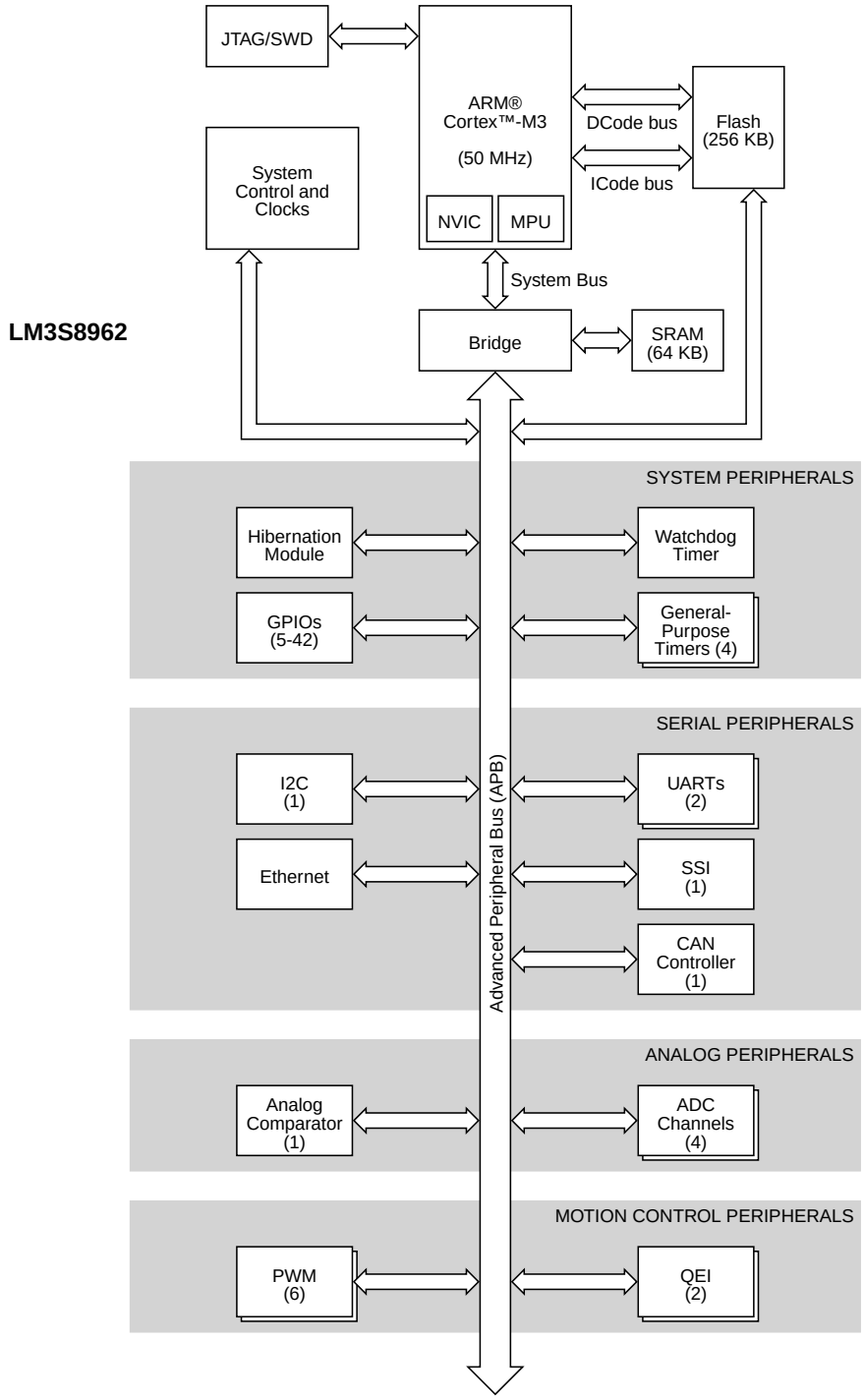

1.4 Functional Overview

The following sections provide an overview of the features of the LM3S8962 microcontroller. The page number in parenthesis indicates where that feature is discussed in detail. Ordering and support information can be found in “Ordering and Contact Information” on page 668.

1.4.1 ARM Cortex™-M3

1.4.1.1 Processor Core (see page 47)

All members of the Stellaris® product family, including the LM3S8962 microcontroller, are designed around an ARM Cortex™-M3 processor core. The ARM Cortex-M3 processor provides the core for a high-performance, low-cost platform that meets the needs of minimal memory implementation, reduced pin count, and low-power consumption, while delivering outstanding computational performance and exceptional system response to interrupts.

“ARM Cortex-M3 Processor Core” on page 47 provides an overview of the ARM core; the core is detailed in the *ARM® Cortex™-M3 Technical Reference Manual*.

1.4.1.2 System Timer (SysTick) (see page 50)

Cortex-M3 includes an integrated system timer, SysTick. SysTick provides a simple, 24-bit clear-on-write, decrementing, wrap-on-zero counter with a flexible control mechanism. The counter can be used in several different ways, for example:

- An RTOS tick timer which fires at a programmable rate (for example, 100 Hz) and invokes a SysTick routine.
- A high-speed alarm timer using the system clock.
- A variable rate alarm or signal timer—the duration is range-dependent on the reference clock used and the dynamic range of the counter.
- A simple counter. Software can use this to measure time to completion and time used.
- An internal clock source control based on missing/meeting durations. The COUNTFLAG bit-field in the control and status register can be used to determine if an action completed within a set duration, as part of a dynamic clock management control loop.

1.4.1.3 Nested Vectored Interrupt Controller (NVIC) (see page 56)

The LM3S8962 controller includes the ARM Nested Vectored Interrupt Controller (NVIC) on the ARM® Cortex™-M3 core. The NVIC and Cortex-M3 prioritize and handle all exceptions. All exceptions are handled in Handler Mode. The processor state is automatically stored to the stack on an exception, and automatically restored from the stack at the end of the Interrupt Service Routine (ISR). The vector is fetched in parallel to the state saving, which enables efficient interrupt entry. The processor supports tail-chaining, which enables back-to-back interrupts to be performed without the overhead of state saving and restoration. Software can set eight priority levels on 7 exceptions (system handlers) and 36 interrupts.

“Interrupts” on page 56 provides an overview of the NVIC controller and the interrupt map. Exceptions and interrupts are detailed in the *ARM® Cortex™-M3 Technical Reference Manual*.

1.4.2 Motor Control Peripherals

To enhance motor control, the LM3S8962 controller features Pulse Width Modulation (PWM) outputs and the Quadrature Encoder Interface (QEI).

1.4.2.1 PWM

Pulse width modulation (PWM) is a powerful technique for digitally encoding analog signal levels. High-resolution counters are used to generate a square wave, and the duty cycle of the square wave is modulated to encode an analog signal. Typical applications include switching power supplies and motor control.

On the LM3S8962, PWM motion control functionality can be achieved through:

- Dedicated, flexible motion control hardware using the PWM pins
- The motion control features of the general-purpose timers using the CCP pins

PWM Pins (see page 537)

The LM3S8962 PWM module consists of three PWM generator blocks and a control block. Each PWM generator block contains one timer (16-bit down or up/down counter), two comparators, a PWM signal generator, a dead-band generator, and an interrupt/ADC-trigger selector. The control block determines the polarity of the PWM signals, and which signals are passed through to the pins.

Each PWM generator block produces two PWM signals that can either be independent signals or a single pair of complementary signals with dead-band delays inserted. The output of the PWM generation blocks are managed by the output control block before being passed to the device pins.

CCP Pins (see page 228)

The General-Purpose Timer Module's CCP (Capture Compare PWM) pins are software programmable to support a simple PWM mode with a software-programmable output inversion of the PWM signal.

1.4.2.2 QEI (see page 574)

A quadrature encoder, also known as a 2-channel incremental encoder, converts linear displacement into a pulse signal. By monitoring both the number of pulses and the relative phase of the two signals, you can track the position, direction of rotation, and speed. In addition, a third channel, or index signal, can be used to reset the position counter.

The Stellaris quadrature encoder with index (QEI) module interprets the code produced by a quadrature encoder wheel to integrate position over time and determine direction of rotation. In addition, it can capture a running estimate of the velocity of the encoder wheel. The LM3S8962 microcontroller includes two QEI modules, which enables control of two motors at the same time.

1.4.3 Analog Peripherals

To handle analog signals, the LM3S8962 microcontroller offers an Analog-to-Digital Converter (ADC).

For support of analog signals, the LM3S8962 microcontroller offers one analog comparator.

1.4.3.1 ADC (see page 282)

An analog-to-digital converter (ADC) is a peripheral that converts a continuous analog voltage to a discrete digital number.

The LM3S8962 ADC module features 10-bit conversion resolution and supports four input channels, plus an internal temperature sensor. Four buffered sample sequences allow rapid sampling of up to eight analog input sources without controller intervention. Each sample sequence provides flexible programming with fully configurable input source, trigger events, interrupt generation, and sequence priority.

1.4.3.2 Analog Comparators (see page 526)

An analog comparator is a peripheral that compares two analog voltages, and provides a logical output that signals the comparison result.

The LM3S8962 microcontroller provides one analog comparator that can be configured to drive an output or generate an interrupt or ADC event.

A comparator can compare a test voltage against any one of these voltages:

- An individual external reference voltage
- A shared single external reference voltage
- A shared internal reference voltage

The comparator can provide its output to a device pin, acting as a replacement for an analog comparator on the board, or it can be used to signal the application via interrupts or triggers to the ADC to cause it to start capturing a sample sequence. The interrupt generation and ADC triggering logic is separate. This means, for example, that an interrupt can be generated on a rising edge and the ADC triggered on a falling edge.

1.4.4 Serial Communications Peripherals

The LM3S8962 controller supports both asynchronous and synchronous serial communications with:

- Two fully programmable 16C550-type UARTs
- One SSI module
- One I^2C module
- One CAN unit
- Ethernet controller

1.4.4.1 UART (see page 318)

A Universal Asynchronous Receiver/Transmitter (UART) is an integrated circuit used for RS-232C serial communications, containing a transmitter (parallel-to-serial converter) and a receiver (serial-to-parallel converter), each clocked separately.

The LM3S8962 controller includes two fully programmable 16C550-type UARTs that support data transfer speeds up to 3.125 Mbps. (Although similar in functionality to a 16C550 UART, it is not register-compatible.) In addition, each UART is capable of supporting IrDA.

Separate 16x8 transmit (TX) and receive (RX) FIFOs reduce CPU interrupt service loading. The UART can generate individually masked interrupts from the RX, TX, modem status, and error conditions. The module provides a single combined interrupt when any of the interrupts are asserted and are unmasked.

1.4.4.2 SSI (see page 359)

Synchronous Serial Interface (SSI) is a four-wire bi-directional full and low-speed communications interface.

The LM3S8962 controller includes one SSI module that provides the functionality for synchronous serial communications with peripheral devices, and can be configured to use the Freescale SPI, MICROWIRE, or TI synchronous serial interface frame formats. The size of the data frame is also configurable, and can be set between 4 and 16 bits, inclusive.

The SSI module performs serial-to-parallel conversion on data received from a peripheral device, and parallel-to-serial conversion on data transmitted to a peripheral device. The TX and RX paths are buffered with internal FIFOs, allowing up to eight 16-bit values to be stored independently.

The SSI module can be configured as either a master or slave device. As a slave device, the SSI module can also be configured to disable its output, which allows a master device to be coupled with multiple slave devices.

The SSI module also includes a programmable bit rate clock divider and prescaler to generate the output serial clock derived from the SSI module's input clock. Bit rates are generated based on the input clock and the maximum bit rate is determined by the connected peripheral.

1.4.4.3 I^2C (see page 396)

The Inter-Integrated Circuit (I^2C) bus provides bi-directional data transfer through a two-wire design (a serial data line SDA and a serial clock line SCL).

The I^2C bus interfaces to external I^2C devices such as serial memory (RAMs and ROMs), networking devices, LCDs, tone generators, and so on. The I^2C bus may also be used for system testing and diagnostic purposes in product development and manufacture.

The LM3S8962 controller includes one I^2C module that provides the ability to communicate to other IC devices over an I^2C bus. The I^2C bus supports devices that can both transmit and receive (write and read) data.

Devices on the I^2C bus can be designated as either a master or a slave. The I^2C module supports both sending and receiving data as either a master or a slave, and also supports the simultaneous operation as both a master and a slave. The four I^2C modes are: Master Transmit, Master Receive, Slave Transmit, and Slave Receive.

A Stellaris® I^2C module can operate at two speeds: Standard (100 Kbps) and Fast (400 Kbps).

Both the I^2C master and slave can generate interrupts. The I^2C master generates interrupts when a transmit or receive operation completes (or aborts due to an error). The I^2C slave generates interrupts when data has been sent or requested by a master.

1.4.4.4 Controller Area Network (see page 432)

Controller Area Network (CAN) is a multicast shared serial-bus standard for connecting electronic control units (ECUs). CAN was specifically designed to be robust in electromagnetically noisy environments and can utilize a differential balanced line like RS-485 or a more robust twisted-pair wire. Originally created for automotive purposes, now it is used in many embedded control applications (for example, industrial or medical). Bit rates up to 1Mb/s are possible at network lengths below 40 meters. Decreased bit rates allow longer network distances (for example, 125 Kb/s at 500m).

A transmitter sends a message to all CAN nodes (broadcasting). Each node decides on the basis of the identifier received whether it should process the message. The identifier also determines the

priority that the message enjoys in competition for bus access. Each CAN message can transmit from 0 to 8 bytes of user information. The LM3S8962 includes one CAN units.

1.4.4.5 Ethernet Controller (see page 478)

Ethernet is a frame-based computer networking technology for local area networks (LANs). Ethernet has been standardized as IEEE 802.3. It defines a number of wiring and signaling standards for the physical layer, two means of network access at the Media Access Control (MAC)/Data Link Layer, and a common addressing format.

The Stellaris® Ethernet Controller consists of a fully integrated media access controller (MAC) and network physical (PHY) interface device. The Ethernet Controller conforms to IEEE 802.3 specifications and fully supports 10BASE-T and 100BASE-TX standards. In addition, the Ethernet Controller supports automatic MDI/MDI-X cross-over correction.

1.4.5 System Peripherals

1.4.5.1 Programmable GPIOs (see page 180)

General-purpose input/output (GPIO) pins offer flexibility for a variety of connections.

The Stellaris® GPIO module is comprised of seven physical GPIO blocks, each corresponding to an individual GPIO port. The GPIO module is FiRM-compliant (compliant to the ARM Foundation IP for Real-Time Microcontrollers specification) and supports 5-42 programmable input/output pins. The number of GPIOs available depends on the peripherals being used (see “Signal Tables” on page 593 for the signals available to each GPIO pin).

The GPIO module features programmable interrupt generation as either edge-triggered or level-sensitive on all pins, programmable control for GPIO pad configuration, and bit masking in both read and write operations through address lines. Pins configured as digital inputs are Schmitt-triggered.

1.4.5.2 Four Programmable Timers (see page 222)

Programmable timers can be used to count or time external events that drive the Timer input pins.

The Stellaris® General-Purpose Timer Module (GPTM) contains four GPTM blocks. Each GPTM block provides two 16-bit timers/counters that can be configured to operate independently as timers or event counters, or configured to operate as one 32-bit timer or one 32-bit Real-Time Clock (RTC). Timers can also be used to trigger analog-to-digital (ADC) conversions.

When configured in 32-bit mode, a timer can run as a Real-Time Clock (RTC), one-shot timer or periodic timer. When in 16-bit mode, a timer can run as a one-shot timer or periodic timer, and can extend its precision by using an 8-bit prescaler. A 16-bit timer can also be configured for event capture or Pulse Width Modulation (PWM) generation.

1.4.5.3 Watchdog Timer (see page 258)

A watchdog timer can generate nonmaskable interrupts (NMIs) or a reset when a time-out value is reached. The watchdog timer is used to regain control when a system has failed due to a software error or to the failure of an external device to respond in the expected way.

The Stellaris® Watchdog Timer module consists of a 32-bit down counter, a programmable load register, interrupt generation logic, and a locking register.

The Watchdog Timer can be configured to generate an interrupt to the controller on its first time-out, and to generate a reset signal on its second time-out. Once the Watchdog Timer has been configured, the lock register can be written to prevent the timer configuration from being inadvertently altered.

1.4.6 Memory Peripherals

The LM3S8962 controller offers both single-cycle SRAM and single-cycle Flash memory.

1.4.6.1 SRAM (see page 156)

The LM3S8962 static random access memory (SRAM) controller supports 64 KB SRAM. The internal SRAM of the Stellaris® devices is located at offset 0x0000.0000 of the device memory map. To reduce the number of time-consuming read-modify-write (RMW) operations, ARM has introduced *bit-banding* technology in the new Cortex-M3 processor. With a bit-band-enabled processor, certain regions in the memory map (SRAM and peripheral space) can use address aliases to access individual bits in a single, atomic operation.

1.4.6.2 Flash (see page 157)

The LM3S8962 Flash controller supports 256 KB of flash memory. The flash is organized as a set of 1-KB blocks that can be individually erased. Erasing a block causes the entire contents of the block to be reset to all 1s. These blocks are paired into a set of 2-KB blocks that can be individually protected. The blocks can be marked as read-only or execute-only, providing different levels of code protection. Read-only blocks cannot be erased or programmed, protecting the contents of those blocks from being modified. Execute-only blocks cannot be erased or programmed, and can only be read by the controller instruction fetch mechanism, protecting the contents of those blocks from being read by either the controller or by a debugger.

1.4.7 Additional Features

1.4.7.1 Memory Map (see page 53)

A memory map lists the location of instructions and data in memory. The memory map for the LM3S8962 controller can be found in “Memory Map” on page 53. Register addresses are given as a hexadecimal increment, relative to the module's base address as shown in the memory map.

The *ARM® Cortex™-M3 Technical Reference Manual* provides further information on the memory map.

1.4.7.2 JTAG TAP Controller (see page 59)

The Joint Test Action Group (JTAG) port is an IEEE standard that defines a Test Access Port and Boundary Scan Architecture for digital integrated circuits and provides a standardized serial interface for controlling the associated test logic. The TAP, Instruction Register (IR), and Data Registers (DR) can be used to test the interconnections of assembled printed circuit boards and obtain manufacturing information on the components. The JTAG Port also provides a means of accessing and controlling design-for-test features such as I/O pin observation and control, scan testing, and debugging.

The JTAG port is composed of the standard five pins: $\overline{\text{TRST}}$, `TCK`, `TMS`, `TDI`, and `TDO`. Data is transmitted serially into the controller on `TDI` and out of the controller on `TDO`. The interpretation of this data is dependent on the current state of the TAP controller. For detailed information on the operation of the JTAG port and TAP controller, please refer to the *IEEE Standard 1149.1-Test Access Port and Boundary-Scan Architecture*.

The Luminary Micro JTAG controller works with the ARM JTAG controller built into the Cortex-M3 core. This is implemented by multiplexing the `TDO` outputs from both JTAG controllers. ARM JTAG instructions select the ARM `TDO` output while Luminary Micro JTAG instructions select the Luminary Micro `TDO` outputs. The multiplexer is controlled by the Luminary Micro JTAG controller, which has comprehensive programming for the ARM, Luminary Micro, and unimplemented JTAG instructions.

1.4.7.3 System Control and Clocks (see page 71)

System control determines the overall operation of the device. It provides information about the device, controls the clocking of the device and individual peripherals, and handles reset detection and reporting.

1.4.7.4 Hibernation Module (see page 136)

The Hibernation module provides logic to switch power off to the main processor and peripherals, and to wake on external or time-based events. The Hibernation module includes power-sequencing logic, a real-time clock with a pair of match registers, low-battery detection circuitry, and interrupt signalling to the processor. It also includes 64 32-bit words of non-volatile memory that can be used for saving state during hibernation.

1.4.8 Hardware Details

Details on the pins and package can be found in the following sections:

- “Pin Diagram” on page 591
- “Signal Tables” on page 593
- “Operating Characteristics” on page 620
- “Electrical Characteristics” on page 621
- “Package Information” on page 637

2 ARM Cortex-M3 Processor Core

The ARM Cortex-M3 processor provides the core for a high-performance, low-cost platform that meets the needs of minimal memory implementation, reduced pin count, and low power consumption, while delivering outstanding computational performance and exceptional system response to interrupts. Features include:

- Compact core.
- Thumb-2 instruction set, delivering the high-performance expected of an ARM core in the memory size usually associated with 8- and 16-bit devices; typically in the range of a few kilobytes of memory for microcontroller class applications.
- Rapid application execution through Harvard architecture characterized by separate buses for instruction and data.
- Exceptional interrupt handling, by implementing the register manipulations required for handling an interrupt in hardware.
- Deterministic, fast interrupt processing: always 12 cycles, or just 6 cycles with tail-chaining
- Memory protection unit (MPU) to provide a privileged mode of operation for complex applications.
- Migration from the ARM7™ processor family for better performance and power efficiency.
- Full-featured debug solution
  - Serial Wire JTAG Debug Port (SWJ-DP)
  - Flash Patch and Breakpoint (FPB) unit for implementing breakpoints
  - Data Watchpoint and Trigger (DWT) unit for implementing watchpoints, trigger resources, and system profiling
  - Instrumentation Trace Macrocell (ITM) for support of printf style debugging
  - Trace Port Interface Unit (TPIU) for bridging to a Trace Port Analyzer
- Optimized for single-cycle flash usage
- Three sleep modes with clock gating for low power
- Single-cycle multiply instruction and hardware divide
- Atomic operations
- ARM Thumb2 mixed 16-/32-bit instruction set
- 1.25 DMIPS/MHz

The Stellaris® family of microcontrollers builds on this core to bring high-performance 32-bit computing to cost-sensitive embedded microcontroller applications, such as factory automation and control, industrial control power devices, building and home automation, and stepper motors.

For more information on the ARM Cortex-M3 processor core, see the *ARM® Cortex™-M3 Technical Reference Manual*. For information on SWJ-DP, see the *ARM® CoreSight Technical Reference Manual*.

2.1 Block Diagram

Figure 2-1. CPU Block Diagram

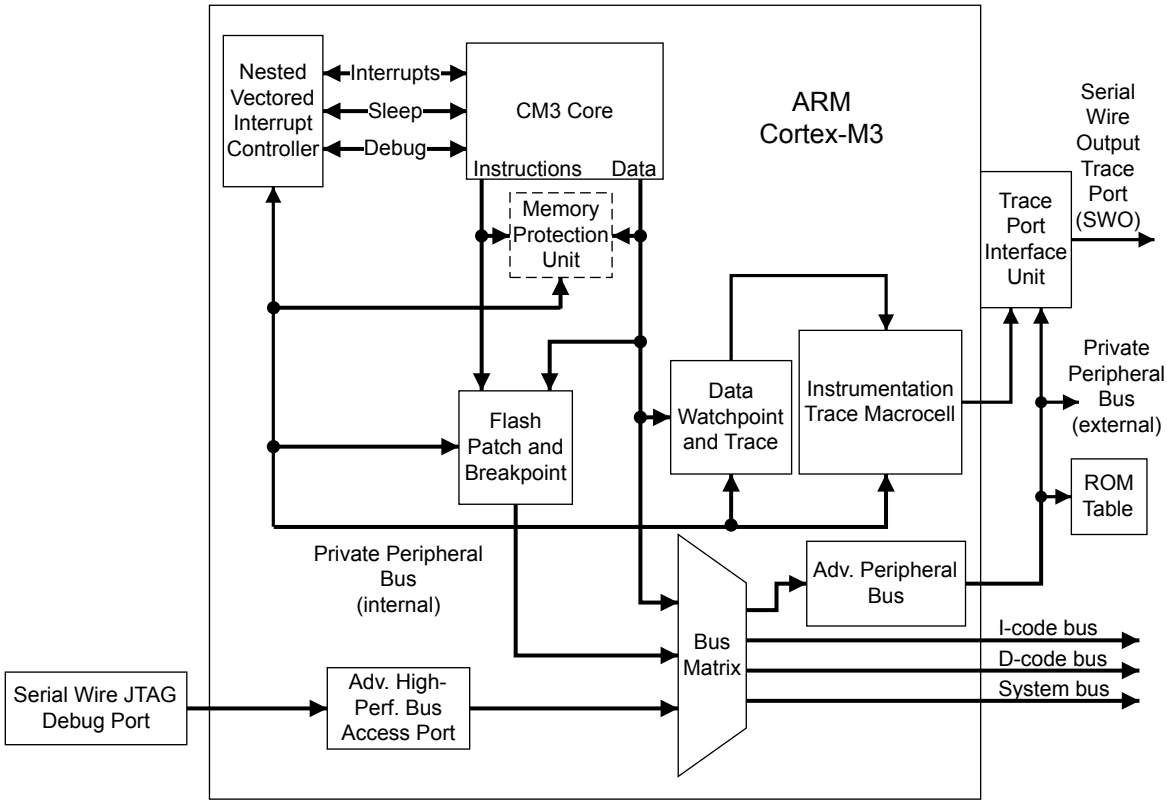

2.2 Functional Description

Important: The *ARM® Cortex™-M3 Technical Reference Manual* describes all the features of an ARM Cortex-M3 in detail. However, these features differ based on the implementation. This section describes the Stellaris® implementation.

Luminary Micro has implemented the ARM Cortex-M3 core as shown in Figure 2-1 on page 48. As noted in the *ARM® Cortex™-M3 Technical Reference Manual*, several Cortex-M3 components are flexible in their implementation: SW/JTAG-DP, ETM, TPIU, the ROM table, the MPU, and the Nested Vectored Interrupt Controller (NVIC). Each of these is addressed in the sections that follow.

2.2.1 Serial Wire and JTAG Debug

Luminary Micro has replaced the ARM SW-DP and JTAG-DP with the ARM CoreSight™-compliant Serial Wire JTAG Debug Port (SWJ-DP) interface. This means Chapter 12, “Debug Port,” of the *ARM® Cortex™-M3 Technical Reference Manual* does not apply to Stellaris® devices.

The SWJ-DP interface combines the SWD and JTAG debug ports into one module. See the *CoreSight™ Design Kit Technical Reference Manual* for details on SWJ-DP.

2.2.2 Embedded Trace Macrocell (ETM)

ETM was not implemented in the Stellaris® devices. This means Chapters 15 and 16 of the *ARM® Cortex™-M3 Technical Reference Manual* can be ignored.

2.2.3 Trace Port Interface Unit (TPIU)

The TPIU acts as a bridge between the Cortex-M3 trace data from the ITM, and an off-chip Trace Port Analyzer. The Stellaris® devices have implemented TPIU as shown in Figure 2-2 on page 49. This is similar to the non-ETM version described in the *ARM® Cortex™-M3 Technical Reference Manual*, however, SWJ-DP only provides SWV output for the TPIU.

Figure 2-2. TPIU Block Diagram

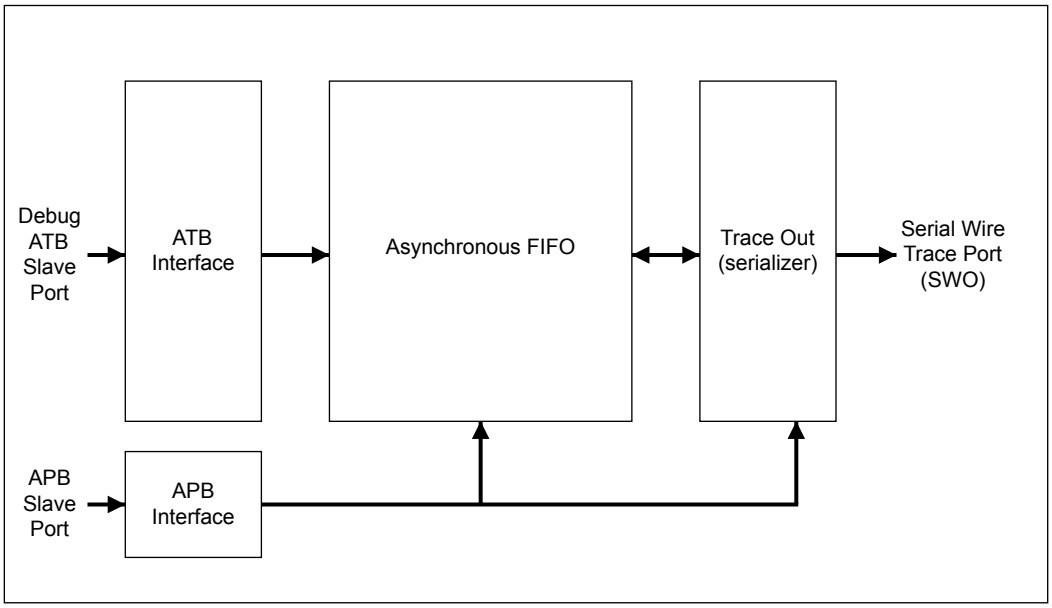

2.2.4 ROM Table

The default ROM table was implemented as described in the *ARM® Cortex™-M3 Technical Reference Manual*.

2.2.5 Memory Protection Unit (MPU)

The Memory Protection Unit (MPU) is included on the LM3S8962 controller and supports the standard ARMv7 Protected Memory System Architecture (PMSA) model. The MPU provides full support for protection regions, overlapping protection regions, access permissions, and exporting memory attributes to the system.

2.2.6 Nested Vectored Interrupt Controller (NVIC)

The Nested Vectored Interrupt Controller (NVIC):

- Facilitates low-latency exception and interrupt handling
- Controls power management
- Implements system control registers

The NVIC supports up to 240 dynamically reprioritizable interrupts each with up to 256 levels of priority. The NVIC and the processor core interface are closely coupled, which enables low latency interrupt processing and efficient processing of late arriving interrupts. The NVIC maintains knowledge of the stacked (nested) interrupts to enable tail-chaining of interrupts.

You can only fully access the NVIC from privileged mode, but you can pend interrupts in user-mode if you enable the Configuration Control Register (see the ARM® Cortex™-M3 Technical Reference Manual). Any other user-mode access causes a bus fault.

All NVIC registers are accessible using byte, halfword, and word unless otherwise stated.

2.2.6.1 Interrupts

The *ARM® Cortex™-M3 Technical Reference Manual* describes the maximum number of interrupts and interrupt priorities. The LM3S8962 microcontroller supports 36 interrupts with eight priority levels.

2.2.6.2 System Timer (SysTick)

Cortex-M3 includes an integrated system timer, SysTick. SysTick provides a simple, 24-bit clear-on-write, decrementing, wrap-on-zero counter with a flexible control mechanism. The counter can be used in several different ways, for example:

- An RTOS tick timer which fires at a programmable rate (for example, 100 Hz) and invokes a SysTick routine.
- A high-speed alarm timer using the system clock.
- A variable rate alarm or signal timer—the duration is range-dependent on the reference clock used and the dynamic range of the counter.
- A simple counter. Software can use this to measure time to completion and time used.
- An internal clock source control based on missing/meeting durations. The COUNTFLAG bit-field in the control and status register can be used to determine if an action completed within a set duration, as part of a dynamic clock management control loop.

Functional Description

The timer consists of three registers:

- A control and status counter to configure its clock, enable the counter, enable the SysTick interrupt, and determine counter status.
- The reload value for the counter, used to provide the counter's wrap value.
- The current value of the counter.

A fourth register, the SysTick Calibration Value Register, is not implemented in the Stellaris® devices.

When enabled, the timer counts down from the reload value to zero, reloads (wraps) to the value in the SysTick Reload Value register on the next clock edge, then decrements on subsequent clocks. Writing a value of zero to the Reload Value register disables the counter on the next wrap. When the counter reaches zero, the COUNTFLAG status bit is set. The COUNTFLAG bit clears on reads.

Writing to the Current Value register clears the register and the COUNTFLAG status bit. The write does not trigger the SysTick exception logic. On a read, the current value is the value of the register at the time the register is accessed.

If the core is in debug state (halted), the counter will not decrement. The timer is clocked with respect to a reference clock. The reference clock can be the core clock or an external clock source.

SysTick Control and Status Register

Use the SysTick Control and Status Register to enable the SysTick features. The reset is 0x0000.0000.

Bit/Field	Name	Type	Reset	Description
31:17	reserved	RO	0	Software should not rely on the value of a reserved bit. To provide compatibility with future products, the value of a reserved bit should be preserved across a read-modify-write operation.
16	COUNTFLAG	R/W	0	Count Flag Returns 1 if timer counted to 0 since last time this was read. Clears on read by application. If read by the debugger using the DAP, this bit is cleared on read-only if the MasterType bit in the AHB-AP Control Register is set to 0. Otherwise, the COUNTFLAG bit is not changed by the debugger read.
15:3	reserved	RO	0	Software should not rely on the value of a reserved bit. To provide compatibility with future products, the value of a reserved bit should be preserved across a read-modify-write operation.
2	CLKSOURCE	R/W	0	Clock Source Value Description 0 External reference clock. (Not implemented for Stellaris microcontrollers.) 1 Core clock If no reference clock is provided, it is held at 1 and so gives the same time as the core clock. The core clock must be at least 2.5 times faster than the reference clock. If it is not, the count values are unpredictable.
1	TICKINT	R/W	0	Tick Interrupt Value Description 0 Counting down to 0 does not generate the interrupt request to the NVIC. Software can use the COUNTFLAG to determine if ever counted to 0. 1 Counting down to 0 pends the SysTick handler.
0	ENABLE	R/W	0	Enable Value Description 0 Counter disabled. 1 Counter operates in a multi-shot way. That is, counter loads with the Reload value and then begins counting down. On reaching 0, it sets the COUNTFLAG to 1 and optionally pends the SysTick handler, based on TICKINT. It then loads the Reload value again, and begins counting.

SysTick Reload Value Register

Use the SysTick Reload Value Register to specify the start value to load into the current value register when the counter reaches 0. It can be any value between 1 and 0x00FF.FFFF. A start value of 0 is possible, but has no effect because the SysTick interrupt and COUNTFLAG are activated when counting from 1 to 0.

Therefore, as a multi-shot timer, repeated over and over, it fires every N+1 clock pulse, where N is any value from 1 to 0x00FF.FFFF. So, if the tick interrupt is required every 100 clock pulses, 99

must be written into the RELOAD. If a new value is written on each tick interrupt, so treated as single shot, then the actual count down must be written. For example, if a tick is next required after 400 clock pulses, 400 must be written into the RELOAD.

Bit/Field	Name	Type	Reset	Description
31:24	reserved	RO	0	Software should not rely on the value of a reserved bit. To provide compatibility with future products, the value of a reserved bit should be preserved across a read-modify-write operation.
23:0	RELOAD	R/W	-	Reload Value to load into the SysTick Current Value Register when the counter reaches 0.

SysTick Current Value Register

Use the SysTick Current Value Register to find the current value in the register.

Bit/Field	Name	Type	Reset	Description
31:24	reserved	RO	0	Software should not rely on the value of a reserved bit. To provide compatibility with future products, the value of a reserved bit should be preserved across a read-modify-write operation.
23:0	CURRENT	W1C	-	Current Value Current value at the time the register is accessed. No read-modify-write protection is provided, so change with care. This register is write-clear. Writing to it with any value clears the register to 0. Clearing this register also clears the COUNTFLAG bit of the SysTick Control and Status Register.

SysTick Calibration Value Register

The SysTick Calibration Value register is not implemented.

3 Memory Map

The memory map for the LM3S8962 controller is provided in Table 3-1 on page 53.

In this manual, register addresses are given as a hexadecimal increment, relative to the module's base address as shown in the memory map. See also Chapter 4, "Memory Map" in the *ARM® Cortex™-M3 Technical Reference Manual*.

Table 3-1. Memory Map[a]

Start	End	Description	For details on registers, see page ...
Memory			
0x0000.0000	0x0003.FFFF	On-chip flash [b]	160
0x0004.0000	0x1FFF.FFFF	Reserved	-
0x2000.0000	0x2000.FFFF	Bit-banded on-chip SRAM[c]	160
0x2001.0000	0x21FF.FFFF	Reserved	-
0x2200.0000	0x221F.FFFF	Bit-band alias of 0x2000.0000 through 0x200F.FFFF	156
0x2220.0000	0x3FFF.FFFF	Reserved	-
FiRM Peripherals			
0x4000.0000	0x4000.0FFF	Watchdog timer	261
0x4000.1000	0x4000.3FFF	Reserved	-
0x4000.4000	0x4000.4FFF	GPIO Port A	187
0x4000.5000	0x4000.5FFF	GPIO Port B	187
0x4000.6000	0x4000.6FFF	GPIO Port C	187
0x4000.7000	0x4000.7FFF	GPIO Port D	187
0x4000.8000	0x4000.8FFF	SSI0	370
0x4000.9000	0x4000.BFFF	Reserved	-
0x4000.C000	0x4000.CFFF	UART0	325
0x4000.D000	0x4000.DFFF	UART1	325
0x4000.E000	0x4001.FFFF	Reserved	-
Peripherals			
0x4002.0000	0x4002.07FF	I2C Master 0	410
0x4002.0800	0x4002.0FFF	I2C Slave 0	423
0x4002.1000	0x4002.3FFF	Reserved	-
0x4002.4000	0x4002.4FFF	GPIO Port E	187
0x4002.5000	0x4002.5FFF	GPIO Port F	187
0x4002.6000	0x4002.6FFF	GPIO Port G	187
0x4002.7000	0x4002.7FFF	Reserved	-
0x4002.8000	0x4002.8FFF	PWM	545
0x4002.9000	0x4002.BFFF	Reserved	-
0x4002.C000	0x4002.CFFF	QEI0	578
0x4002.D000	0x4002.DFFF	QEI1	578
0x4002.E000	0x4002.FFFF	Reserved	-
0x4003.0000	0x4003.0FFF	Timer0	233

Start	End	Description	For details on registers, see page ...
0x4003.1000	0x4003.1FFF	Timer1	233
0x4003.2000	0x4003.2FFF	Timer2	233
0x4003.3000	0x4003.3FFF	Timer3	233
0x4003.4000	0x4003.7FFF	Reserved	-
0x4003.8000	0x4003.8FFF	ADC	290
0x4003.9000	0x4003.BFFF	Reserved	-
0x4003.C000	0x4003.CFFF	Analog Comparators	526
0x4003.D000	0x4003.FFFF	Reserved	-
0x4004.0000	0x4004.0FFF	CAN0 Controller	450
0x4004.1000	0x4004.7FFF	Reserved	-
0x4004.8000	0x4004.8FFF	Ethernet Controller	488
0x4004.9000	0x400F.BFFF	Reserved	-
0x400F.C000	0x400F.CFFF	Hibernation Module	143
0x400F.D000	0x400F.DFFF	Flash control	160
0x400F.E000	0x400F.EFFF	System control	81
0x400F.F000	0x41FF.FFFF	Reserved	-
0x4200.0000	0x43FF.FFFF	Bit-banded alias of 0x4000.0000 through 0x400F.FFFF	-
0x4400.0000	0xDFFF.FFFF	Reserved	-
Private Peripheral Bus			
0xE000.0000	0xE000.0FFF	Instrumentation Trace Macrocell (ITM)	*ARM® Cortex™-M3 Technical Reference Manual*
0xE000.1000	0xE000.1FFF	Data Watchpoint and Trace (DWT)	*ARM® Cortex™-M3 Technical Reference Manual*
0xE000.2000	0xE000.2FFF	Flash Patch and Breakpoint (FPB)	*ARM® Cortex™-M3 Technical Reference Manual*
0xE000.3000	0xE000.DFFF	Reserved	-
0xE000.E000	0xE000.EFFF	Nested Vectored Interrupt Controller (NVIC)	*ARM® Cortex™-M3 Technical Reference Manual*
0xE000.F000	0xE003.FFFF	Reserved	-
0xE004.0000	0xE004.0FFF	Trace Port Interface Unit (TPIU)	*ARM® Cortex™-M3 Technical Reference Manual*
0xE004.1000	0xFFFF.FFFF	Reserved	-

a. All reserved space returns a bus fault when read or written.

b. The unavailable flash will bus fault throughout this range.
c. The unavailable SRAM will bus fault throughout this range.

4 Interrupts

The ARM Cortex-M3 processor and the Nested Vectored Interrupt Controller (NVIC) prioritize and handle all exceptions. All exceptions are handled in Handler Mode. The processor state is automatically stored to the stack on an exception, and automatically restored from the stack at the end of the Interrupt Service Routine (ISR). The vector is fetched in parallel to the state saving, which enables efficient interrupt entry. The processor supports tail-chaining, which enables back-to-back interrupts to be performed without the overhead of state saving and restoration.

Table 4-1 on page 56 lists all exception types. Software can set eight priority levels on seven of these exceptions (system handlers) as well as on 36 interrupts (listed in Table 4-2 on page 57).

Priorities on the system handlers are set with the NVIC System Handler Priority registers. Interrupts are enabled through the NVIC Interrupt Set Enable register and prioritized with the NVIC Interrupt Priority registers. You also can group priorities by splitting priority levels into pre-emption priorities and subpriorities. All of the interrupt registers are described in Chapter 8, “Nested Vectored Interrupt Controller” in the *ARM® Cortex™-M3 Technical Reference Manual*.

Internally, the highest user-settable priority (0) is treated as fourth priority, after a Reset, NMI, and a Hard Fault. Note that 0 is the default priority for all the settable priorities.

If you assign the same priority level to two or more interrupts, their hardware priority (the lower position number) determines the order in which the processor activates them. For example, if both GPIO Port A and GPIO Port B are priority level 1, then GPIO Port A has higher priority.

Important: It may take several processor cycles after a write to clear an interrupt source in order for NVIC to see the interrupt source de-assert. This means if the interrupt clear is done as the last action in an interrupt handler, it is possible for the interrupt handler to complete while NVIC sees the interrupt as still asserted, causing the interrupt handler to be re-entered errantly. This can be avoided by either clearing the interrupt source at the beginning of the interrupt handler or by performing a read or write after the write to clear the interrupt source (and flush the write buffer).

See Chapter 5, “Exceptions” and Chapter 8, “Nested Vectored Interrupt Controller” in the *ARM® Cortex™-M3 Technical Reference Manual* for more information on exceptions and interrupts.

Table 4-1. Exception Types

Exception Type	Vector Number	Priority[a]	Description
-	0	-	Stack top is loaded from first entry of vector table on reset.
Reset	1	-3 (highest)	Invoked on power up and warm reset. On first instruction, drops to lowest priority (and then is called the base level of activation). This is asynchronous.
Non-Maskable Interrupt (NMI)	2	-2	Cannot be stopped or preempted by any exception but reset. This is asynchronous. An NMI is only producible by software, using the NVIC **Interrupt Control State** register.
Hard Fault	3	-1	All classes of Fault, when the fault cannot activate due to priority or the configurable fault handler has been disabled. This is synchronous.
Memory Management	4	settable	MPU mismatch, including access violation and no match. This is synchronous. The priority of this exception can be changed.

Exception Type	Vector Number	Priority[a]	Description
Bus Fault	5	settable	Pre-fetch fault, memory access fault, and other address/memory related faults. This is synchronous when precise and asynchronous when imprecise. You can enable or disable this fault.
Usage Fault	6	settable	Usage fault, such as undefined instruction executed or illegal state transition attempt. This is synchronous.
-	7-10	-	Reserved.
SVCall	11	settable	System service call with SVC instruction. This is synchronous.
Debug Monitor	12	settable	Debug monitor (when not halting). This is synchronous, but only active when enabled. It does not activate if lower priority than the current activation.
-	13	-	Reserved.
PendSV	14	settable	Pendable request for system service. This is asynchronous and only pended by software.
SysTick	15	settable	System tick timer has fired. This is asynchronous.
Interrupts	16 and above	settable	Asserted from outside the ARM Cortex-M3 core and fed through the NVIC (prioritized). These are all asynchronous. Table 4-2 on page 57 lists the interrupts on the LM3S8962 controller.

a. 0 is the default priority for all the settable priorities.

Table 4-2. Interrupts

Vector Number	Interrupt Number (Bit in Interrupt Registers)	Description
0-15	-	Processor exceptions
16	0	GPIO Port A
17	1	GPIO Port B
18	2	GPIO Port C
19	3	GPIO Port D
20	4	GPIO Port E
21	5	UART0
22	6	UART1
23	7	SSI0
24	8	I2C0
25	9	PWM Fault
26	10	PWM Generator 0
27	11	PWM Generator 1
28	12	PWM Generator 2
29	13	QEI0
30	14	ADC Sequence 0
31	15	ADC Sequence 1
32	16	ADC Sequence 2
33	17	ADC Sequence 3
34	18	Watchdog timer
35	19	Timer0 A
36	20	Timer0 B

Vector Number	Interrupt Number (Bit in Interrupt Registers)	Description
37	21	Timer1 A
38	22	Timer1 B
39	23	Timer2 A
40	24	Timer2 B
41	25	Analog Comparator 0
42-43	26-27	Reserved
44	28	System Control
45	29	Flash Control
46	30	GPIO Port F
47	31	GPIO Port G
48-50	32-34	Reserved
51	35	Timer3 A
52	36	Timer3 B
53	37	Reserved
54	38	QEI1
55	39	CAN0
56-57	40-41	Reserved
58	42	Ethernet Controller
59	43	Hibernation Module
60-70	44-54	Reserved

5 JTAG Interface

The Joint Test Action Group (JTAG) port is an IEEE standard that defines a Test Access Port and Boundary Scan Architecture for digital integrated circuits and provides a standardized serial interface for controlling the associated test logic. The TAP, Instruction Register (IR), and Data Registers (DR) can be used to test the interconnections of assembled printed circuit boards and obtain manufacturing information on the components. The JTAG Port also provides a means of accessing and controlling design-for-test features such as I/O pin observation and control, scan testing, and debugging.

The JTAG port is comprised of five pins: $\overline{\text{TRST}}$, TCK, TMS, TDI, and TDO. Data is transmitted serially into the controller on TDI and out of the controller on TDO. The interpretation of this data is dependent on the current state of the TAP controller. For detailed information on the operation of the JTAG port and TAP controller, please refer to the *IEEE Standard 1149.1-Test Access Port and Boundary-Scan Architecture*.

The Luminary Micro JTAG controller works with the ARM JTAG controller built into the Cortex-M3 core. This is implemented by multiplexing the TDO outputs from both JTAG controllers. ARM JTAG instructions select the ARM TDO output while Luminary Micro JTAG instructions select the Luminary Micro TDO outputs. The multiplexer is controlled by the Luminary Micro JTAG controller, which has comprehensive programming for the ARM, Luminary Micro, and unimplemented JTAG instructions.

The Stellaris® JTAG module has the following features:

- IEEE 1149.1-1990 compatible Test Access Port (TAP) controller
- Four-bit Instruction Register (IR) chain for storing JTAG instructions
- IEEE standard instructions: BYPASS, IDCODE, SAMPLE/PRELOAD, EXTEST and INTEST
- ARM additional instructions: APACC, DPACC and ABORT
- Integrated ARM Serial Wire Debug (SWD)

See the *ARM® Cortex™-M3 Technical Reference Manual* for more information on the ARM JTAG controller.

5.1 Block Diagram

Figure 5-1. JTAG Module Block Diagram

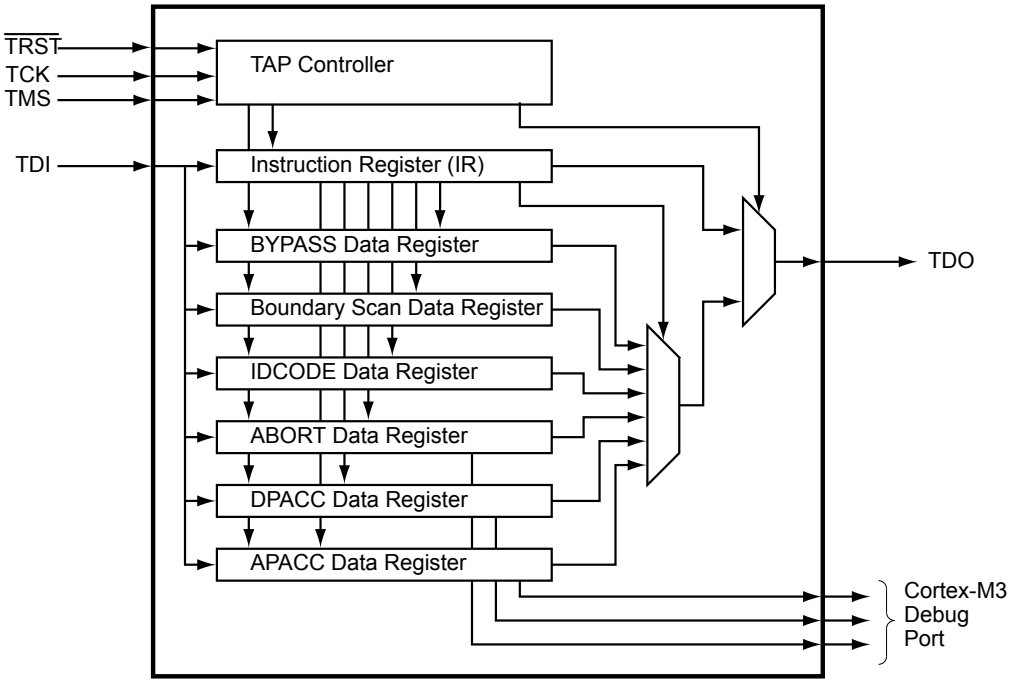

5.2 Functional Description

A high-level conceptual drawing of the JTAG module is shown in Figure 5-1 on page 60. The JTAG module is composed of the Test Access Port (TAP) controller and serial shift chains with parallel update registers. The TAP controller is a simple state machine controlled by the $\overline{\text{TRST}}$, TCK and TMS inputs. The current state of the TAP controller depends on the current value of $\overline{\text{TRST}}$ and the sequence of values captured on TMS at the rising edge of TCK. The TAP controller determines when the serial shift chains capture new data, shift data from TDI towards TDO, and update the parallel load registers. The current state of the TAP controller also determines whether the Instruction Register (IR) chain or one of the Data Register (DR) chains is being accessed.

The serial shift chains with parallel load registers are comprised of a single Instruction Register (IR) chain and multiple Data Register (DR) chains. The current instruction loaded in the parallel load register determines which DR chain is captured, shifted, or updated during the sequencing of the TAP controller.

Some instructions, like EXTEST and INTEST, operate on data currently in a DR chain and do not capture, shift, or update any of the chains. Instructions that are not implemented decode to the BYPASS instruction to ensure that the serial path between TDI and TDO is always connected (see Table 5-2 on page 66 for a list of implemented instructions).

See “JTAG and Boundary Scan” on page 626 for JTAG timing diagrams.

5.2.1 JTAG Interface Pins

The JTAG interface consists of five standard pins: $\overline{\text{TRST}}$,TCK, TMS, TDI, and TDO. These pins and their associated reset state are given in Table 5-1 on page 61. Detailed information on each pin follows.

Table 5-1. JTAG Port Pins Reset State

Pin Name	Data Direction	Internal Pull-Up	Internal Pull-Down	Drive Strength	Drive Value
TRST	Input	Enabled	Disabled	N/A	N/A
TCK	Input	Enabled	Disabled	N/A	N/A
TMS	Input	Enabled	Disabled	N/A	N/A
TDI	Input	Enabled	Disabled	N/A	N/A
TDO	Output	Enabled	Disabled	2-mA driver	High-Z

5.2.1.1 Test Reset Input ($\overline{\text{TRST}}$)

The $\overline{\text{TRST}}$ pin is an asynchronous active Low input signal for initializing and resetting the JTAG TAP controller and associated JTAG circuitry. When $\overline{\text{TRST}}$ is asserted, the TAP controller resets to the Test-Logic-Reset state and remains there while $\overline{\text{TRST}}$ is asserted. When the TAP controller enters the Test-Logic-Reset state, the JTAG Instruction Register (IR) resets to the default instruction, IDCODE.

By default, the internal pull-up resistor on the $\overline{\text{TRST}}$ pin is enabled after reset. Changes to the pull-up resistor settings on GPIO Port B should ensure that the internal pull-up resistor remains enabled on PB7/$\overline{\text{TRST}}$; otherwise JTAG communication could be lost.

5.2.1.2 Test Clock Input (TCK)

The TCK pin is the clock for the JTAG module. This clock is provided so the test logic can operate independently of any other system clocks. In addition, it ensures that multiple JTAG TAP controllers that are daisy-chained together can synchronously communicate serial test data between components. During normal operation, TCK is driven by a free-running clock with a nominal 50% duty cycle. When necessary, TCK can be stopped at 0 or 1 for extended periods of time. While TCK is stopped at 0 or 1, the state of the TAP controller does not change and data in the JTAG Instruction and Data Registers is not lost.

By default, the internal pull-up resistor on the TCK pin is enabled after reset. This assures that no clocking occurs if the pin is not driven from an external source. The internal pull-up and pull-down resistors can be turned off to save internal power as long as the TCK pin is constantly being driven by an external source.

5.2.1.3 Test Mode Select (TMS)

The TMS pin selects the next state of the JTAG TAP controller. TMS is sampled on the rising edge of TCK. Depending on the current TAP state and the sampled value of TMS, the next state is entered. Because the TMS pin is sampled on the rising edge of TCK, the *IEEE Standard 1149.1* expects the value on TMS to change on the falling edge of TCK.

Holding TMS high for five consecutive TCK cycles drives the TAP controller state machine to the Test-Logic-Reset state. When the TAP controller enters the Test-Logic-Reset state, the JTAG Instruction Register (IR) resets to the default instruction, IDCODE. Therefore, this sequence can be used as a reset mechanism, similar to asserting $\overline{\text{TRST}}$. The JTAG Test Access Port state machine can be seen in its entirety in Figure 5-2 on page 63.

By default, the internal pull-up resistor on the TMS pin is enabled after reset. Changes to the pull-up resistor settings on GPIO Port C should ensure that the internal pull-up resistor remains enabled on PC1/TMS; otherwise JTAG communication could be lost.

5.2.1.4 Test Data Input (TDI)

The TDI pin provides a stream of serial information to the IR chain and the DR chains. TDI is sampled on the rising edge of TCK and, depending on the current TAP state and the current instruction, presents this data to the proper shift register chain. Because the TDI pin is sampled on the rising edge of TCK, the *IEEE Standard 1149.1* expects the value on TDI to change on the falling edge of TCK.

By default, the internal pull-up resistor on the TDI pin is enabled after reset. Changes to the pull-up resistor settings on GPIO Port C should ensure that the internal pull-up resistor remains enabled on PC2/TDI; otherwise JTAG communication could be lost.

5.2.1.5 Test Data Output (TDO)

The TDO pin provides an output stream of serial information from the IR chain or the DR chains. The value of TDO depends on the current TAP state, the current instruction, and the data in the chain being accessed. In order to save power when the JTAG port is not being used, the TDO pin is placed in an inactive drive state when not actively shifting out data. Because TDO can be connected to the TDI of another controller in a daisy-chain configuration, the *IEEE Standard 1149.1* expects the value on TDO to change on the falling edge of TCK.

By default, the internal pull-up resistor on the TDO pin is enabled after reset. This assures that the pin remains at a constant logic level when the JTAG port is not being used. The internal pull-up and pull-down resistors can be turned off to save internal power if a High-Z output value is acceptable during certain TAP controller states.

5.2.2 JTAG TAP Controller

The JTAG TAP controller state machine is shown in Figure 5-2 on page 63. The TAP controller state machine is reset to the Test-Logic-Reset state on the assertion of a Power-On-Reset (POR) or the assertion of $\overline{\text{TRST}}$. Asserting the correct sequence on the TMS pin allows the JTAG module to shift in new instructions, shift in data, or idle during extended testing sequences. For detailed information on the function of the TAP controller and the operations that occur in each state, please refer to *IEEE Standard 1149.1*.

Figure 5-2. Test Access Port State Machine

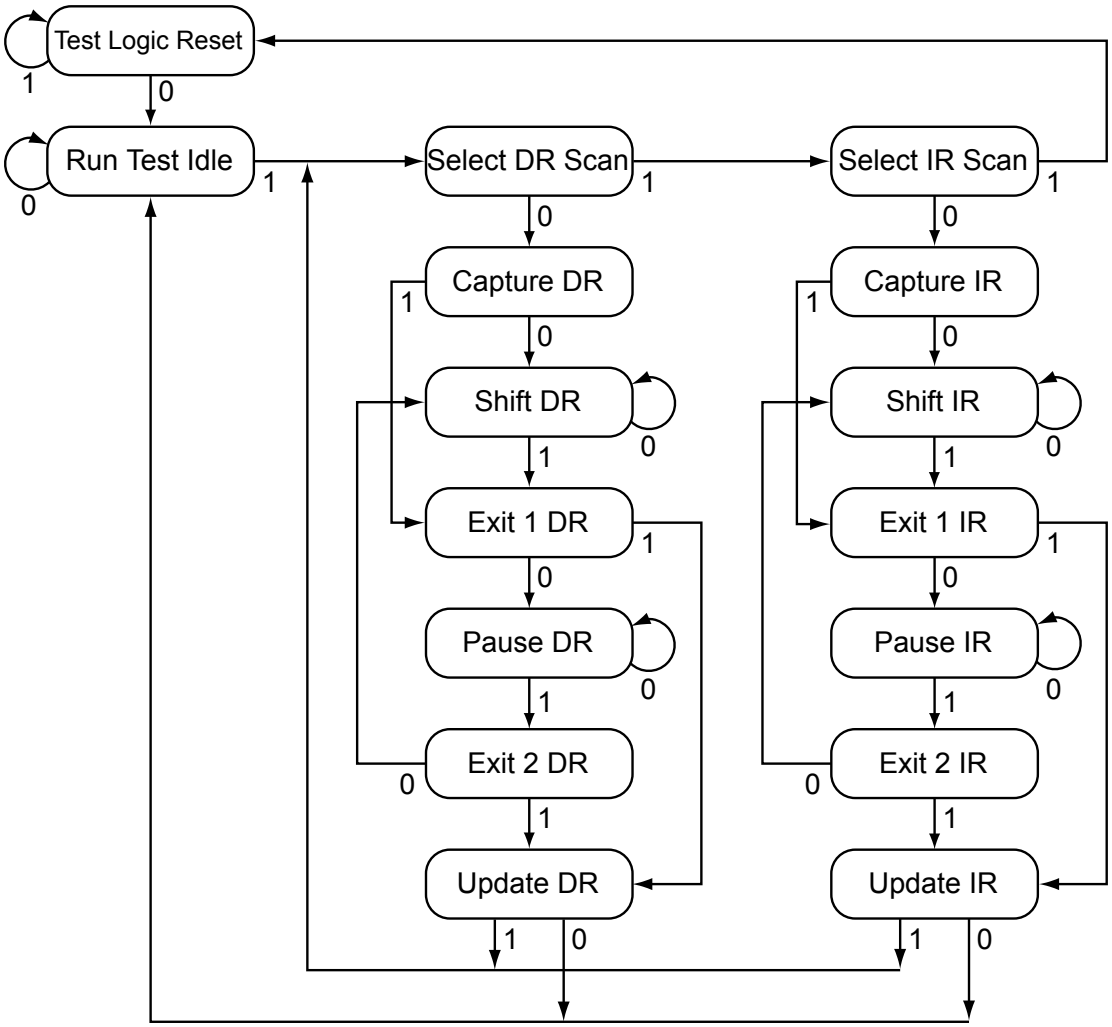

5.2.3 Shift Registers

The Shift Registers consist of a serial shift register chain and a parallel load register. The serial shift register chain samples specific information during the TAP controller's CAPTURE states and allows this information to be shifted out of `TDO` during the TAP controller's SHIFT states. While the sampled data is being shifted out of the chain on `TDO`, new data is being shifted into the serial shift register on `TDI`. This new data is stored in the parallel load register during the TAP controller's UPDATE states. Each of the shift registers is discussed in detail in "Register Descriptions" on page 66.

5.2.4 Operational Considerations

There are certain operational considerations when using the JTAG module. Because the JTAG pins can be programmed to be GPIOs, board configuration and reset conditions on these pins must be considered. In addition, because the JTAG module has integrated ARM Serial Wire Debug, the method for switching between these two operational modes is described below.

5.2.4.1 GPIO Functionality

When the controller is reset with either a POR or $\overline{\text{RST}}$, the JTAG/SWD port pins default to their JTAG/SWD configurations. The default configuration includes enabling digital functionality (setting **GPIODEN** to 1), enabling the pull-up resistors (setting **GPIOPUR** to 1), and enabling the alternate hardware function (setting **GPIOAFSEL** to 1) for the `PB7` and `PC[3:0]` JTAG/SWD pins.

It is possible for software to configure these pins as GPIOs after reset by writing 0s to `PB7` and `PC[3:0]` in the **GPIOAFSEL** register. If the user does not require the JTAG/SWD port for debugging or board-level testing, this provides five more GPIOs for use in the design.

Caution – It is possible to create a software sequence that prevents the debugger from connecting to the Stellaris® microcontroller. If the program code loaded into flash immediately changes the JTAG pins to their GPIO functionality, the debugger may not have enough time to connect and halt the controller before the JTAG pin functionality switches. This may lock the debugger out of the part. This can be avoided with a software routine that restores JTAG functionality based on an external or software trigger.

The GPIO commit control registers provide a layer of protection against accidental programming of critical hardware peripherals. Protection is currently provided for the five JTAG/SWD pins (`PB7` and `PC[3:0]`). Writes to protected bits of the **GPIO Alternate Function Select (GPIOAFSEL)** register (see page 197) are not committed to storage unless the **GPIO Lock (GPIOLOCK)** register (see page 207) has been unlocked and the appropriate bits of the **GPIO Commit (GPIOCR)** register (see page 208) have been set to 1.

Recovering a "Locked" Device

Note: Performing the sequence below causes the nonvolatile registers discussed in “Nonvolatile Register Programming” on page 158 to be restored to their factory default values. The mass erase of the flash memory caused by the below sequence occurs prior to the nonvolatile registers being restored.

If software configures any of the JTAG/SWD pins as GPIO and loses the ability to communicate with the debugger, there is a debug sequence that can be used to recover the device. Performing a total of ten JTAG-to-SWD and SWD-to-JTAG switch sequences while holding the device in reset mass erases the flash memory. The sequence to recover the device is:

1. Assert and hold the $\overline{\text{RST}}$ signal.
2. Perform the JTAG-to-SWD switch sequence.
3. Perform the SWD-to-JTAG switch sequence.
4. Perform the JTAG-to-SWD switch sequence.
5. Perform the SWD-to-JTAG switch sequence.
6. Perform the JTAG-to-SWD switch sequence.
7. Perform the SWD-to-JTAG switch sequence.
8. Perform the JTAG-to-SWD switch sequence.
9. Perform the SWD-to-JTAG switch sequence.
10. Perform the JTAG-to-SWD switch sequence.

11. Perform the SWD-to-JTAG switch sequence.
12. Release the $\overline{RST}$ signal.
13. Wait 400 ms.
14. Power-cycle the device.

The JTAG-to-SWD and SWD-to-JTAG switch sequences are described in "ARM Serial Wire Debug (SWD)" on page 65. When performing switch sequences for the purpose of recovering the debug capabilities of the device, only steps 1 and 2 of the switch sequence in the section called "JTAG-to-SWD Switching" on page 65 must be performed.

5.2.4.2 Communication with JTAG/SWD

Because the debug clock and the system clock can be running at different frequencies, care must be taken to maintain reliable communication with the JTAG/SWD interface. In the Capture-DR state, the result of the previous transaction, if any, is returned, together with a 3-bit ACK response. Software should check the ACK response to see if the previous operation has completed before initiating a new transaction. Alternatively, if the system clock is at least 8 times faster than the debug clock (`TCK` or `SWCLK`), the previous operation has enough time to complete and the ACK bits do not have to be checked.

5.2.4.3 ARM Serial Wire Debug (SWD)

In order to seamlessly integrate the ARM Serial Wire Debug (SWD) functionality, a serial-wire debugger must be able to connect to the Cortex-M3 core without having to perform, or have any knowledge of, JTAG cycles. This is accomplished with a SWD preamble that is issued before the SWD session begins.

The switching preamble used to enable the SWD interface of the SWJ-DP module starts with the TAP controller in the Test-Logic-Reset state. From here, the preamble sequences the TAP controller through the following states: Run Test Idle, Select DR, Select IR, Test Logic Reset, Test Logic Reset, Run Test Idle, Run Test Idle, Select DR, Select IR, Test Logic Reset, Test Logic Reset, Run Test Idle, Run Test Idle, Select DR, Select IR, and Test Logic Reset states.

Stepping through this sequences of the TAP state machine enables the SWD interface and disables the JTAG interface. For more information on this operation and the SWD interface, see the *ARM® Cortex™-M3 Technical Reference Manual* and the *ARM® CoreSight Technical Reference Manual*.

Because this sequence is a valid series of JTAG operations that could be issued, the ARM JTAG TAP controller is not fully compliant to the *IEEE Standard 1149.1*. This is the only instance where the ARM JTAG TAP controller does not meet full compliance with the specification. Due to the low probability of this sequence occurring during normal operation of the TAP controller, it should not affect normal performance of the JTAG interface.

JTAG-to-SWD Switching

To switch the operating mode of the Debug Access Port (DAP) from JTAG to SWD mode, the external debug hardware must send the switching preamble to the device. The 16-bit switch sequence for switching to SWD mode is defined as b1110011110011110, transmitted LSB first. This can also be represented as 16'hE79E when transmitted LSB first. The complete switch sequence should consist of the following transactions on the `TCK/SWCLK` and `TMS/SWDIO` signals:

1. Send at least 50 `TCK/SWCLK` cycles with `TMS/SWDIO` set to 1. This ensures that both JTAG and SWD are in their reset/idle states.

2. Send the 16-bit JTAG-to-SWD switch sequence, 16'hE79E.

3. Send at least 50 TCK/SWCLK cycles with TMS/SWDIO set to 1. This ensures that if SWJ-DP was already in SWD mode, before sending the switch sequence, the SWD goes into the line reset state.

SWD-to-JTAG Switching

To switch the operating mode of the Debug Access Port (DAP) from SWD to JTAG mode, the external debug hardware must send a switch sequence to the device. The 16-bit switch sequence for switching to JTAG mode is defined as b1110011100111100, transmitted LSB first. This can also be represented as 16'hE73C when transmitted LSB first. The complete switch sequence should consist of the following transactions on the TCK/SWCLK and TMS/SWDIO signals:

1. Send at least 50 TCK/SWCLK cycles with TMS/SWDIO set to 1. This ensures that both JTAG and SWD are in their reset/idle states.

2. Send the 16-bit SWD-to-JTAG switch sequence, 16'hE73C.

3. Send at least 5 TCK/SWCLK cycles with TMS/SWDIO set to 1. This ensures that if SWJ-DP was already in JTAG mode, before sending the switch sequence, the JTAG goes into the Test Logic Reset state.

5.3 Initialization and Configuration

After a Power-On-Reset or an external reset ($\overline{\text{RST}}$), the JTAG pins are automatically configured for JTAG communication. No user-defined initialization or configuration is needed. However, if the user application changes these pins to their GPIO function, they must be configured back to their JTAG functionality before JTAG communication can be restored. This is done by enabling the five JTAG pins (PB7 and PC[3:0]) for their alternate function using the **GPIOAFSEL** register. In addition to enabling the alternate functions, any other changes to the GPIO pad configurations on the five JTAG pins (PB7 andPC[3:0]) should be reverted to their default settings.

5.4 Register Descriptions

There are no APB-accessible registers in the JTAG TAP Controller or Shift Register chains. The registers within the JTAG controller are all accessed serially through the TAP Controller. The registers can be broken down into two main categories: Instruction Registers and Data Registers.

5.4.1 Instruction Register (IR)

The JTAG TAP Instruction Register (IR) is a four-bit serial scan chain connected between the JTAG TDI and TDO pins with a parallel load register. When the TAP Controller is placed in the correct states, bits can be shifted into the Instruction Register. Once these bits have been shifted into the chain and updated, they are interpreted as the current instruction. The decode of the Instruction Register bits is shown in Table 5-2 on page 66. A detailed explanation of each instruction, along with its associated Data Register, follows.

Table 5-2. JTAG Instruction Register Commands

IR[3:0]	Instruction	Description
0000	EXTEST	Drives the values preloaded into the Boundary Scan Chain by the SAMPLE/PRELOAD instruction onto the pads.
0001	INTEST	Drives the values preloaded into the Boundary Scan Chain by the SAMPLE/PRELOAD instruction into the controller.

IR[3:0]	Instruction	Description
0010	SAMPLE / PRELOAD	Captures the current I/O values and shifts the sampled values out of the Boundary Scan Chain while new preload data is shifted in.
1000	ABORT	Shifts data into the ARM Debug Port Abort Register.
1010	DPACC	Shifts data into and out of the ARM DP Access Register.
1011	APACC	Shifts data into and out of the ARM AC Access Register.
1110	IDCODE	Loads manufacturing information defined by the *IEEE Standard 1149.1* into the IDCODE chain and shifts it out.
1111	BYPASS	Connects `TDI` to `TDO` through a single Shift Register chain.
All Others	Reserved	Defaults to the BYPASS instruction to ensure that `TDI` is always connected to `TDO`.

5.4.1.1 EXTEST Instruction

The EXTEST instruction is not associated with its own Data Register chain. The EXTEST instruction uses the data that has been preloaded into the Boundary Scan Data Register using the SAMPLE/PRELOAD instruction. When the EXTEST instruction is present in the Instruction Register, the preloaded data in the Boundary Scan Data Register associated with the outputs and output enables are used to drive the GPIO pads rather than the signals coming from the core. This allows tests to be developed that drive known values out of the controller, which can be used to verify connectivity. While the EXTEST instruction is present in the Instruction Register, the Boundary Scan Data Register can be accessed to sample and shift out the current data and load new data into the Boundary Scan Data Register.

5.4.1.2 INTEST Instruction

The INTEST instruction is not associated with its own Data Register chain. The INTEST instruction uses the data that has been preloaded into the Boundary Scan Data Register using the SAMPLE/PRELOAD instruction. When the INTEST instruction is present in the Instruction Register, the preloaded data in the Boundary Scan Data Register associated with the inputs are used to drive the signals going into the core rather than the signals coming from the GPIO pads. This allows tests to be developed that drive known values into the controller, which can be used for testing. It is important to note that although the $\overline{\text{RST}}$ input pin is on the Boundary Scan Data Register chain, it is only observable. While the INTEXT instruction is present in the Instruction Register, the Boundary Scan Data Register can be accessed to sample and shift out the current data and load new data into the Boundary Scan Data Register.

5.4.1.3 SAMPLE/PRELOAD Instruction

The SAMPLE/PRELOAD instruction connects the Boundary Scan Data Register chain between `TDI` and `TDO`. This instruction samples the current state of the pad pins for observation and preloads new test data. Each GPIO pad has an associated input, output, and output enable signal. When the TAP controller enters the Capture DR state during this instruction, the input, output, and output-enable signals to each of the GPIO pads are captured. These samples are serially shifted out of `TDO` while the TAP controller is in the Shift DR state and can be used for observation or comparison in various tests.

While these samples of the inputs, outputs, and output enables are being shifted out of the Boundary Scan Data Register, new data is being shifted into the Boundary Scan Data Register from `TDI`. Once the new data has been shifted into the Boundary Scan Data Register, the data is saved in the parallel load registers when the TAP controller enters the Update DR state. This update of the parallel load register preloads data into the Boundary Scan Data Register that is associated with each input, output, and output enable. This preloaded data can be used with the EXTEST and

INTEST instructions to drive data into or out of the controller. Please see “Boundary Scan Data Register” on page 69 for more information.

5.4.1.4 ABORT Instruction

The ABORT instruction connects the associated ABORT Data Register chain between `TDI` and `TDO`. This instruction provides read and write access to the ABORT Register of the ARM Debug Access Port (DAP). Shifting the proper data into this Data Register clears various error bits or initiates a DAP abort of a previous request. Please see the “ABORT Data Register” on page 70 for more information.

5.4.1.5 DPACC Instruction

The DPACC instruction connects the associated DPACC Data Register chain between `TDI` and `TDO`. This instruction provides read and write access to the DPACC Register of the ARM Debug Access Port (DAP). Shifting the proper data into this register and reading the data output from this register allows read and write access to the ARM debug and status registers. Please see “DPACC Data Register” on page 70 for more information.

5.4.1.6 APACC Instruction

The APACC instruction connects the associated APACC Data Register chain between `TDI` and `TDO`. This instruction provides read and write access to the APACC Register of the ARM Debug Access Port (DAP). Shifting the proper data into this register and reading the data output from this register allows read and write access to internal components and buses through the Debug Port. Please see “APACC Data Register” on page 70 for more information.

5.4.1.7 IDCODE Instruction

The IDCODE instruction connects the associated IDCODE Data Register chain between `TDI` and `TDO`. This instruction provides information on the manufacturer, part number, and version of the ARM core. This information can be used by testing equipment and debuggers to automatically configure their input and output data streams. IDCODE is the default instruction that is loaded into the JTAG Instruction Register when a Power-On-Reset (POR) is asserted, $\overline{\text{TRST}}$ is asserted, or the Test-Logic-Reset state is entered. Please see “IDCODE Data Register” on page 68 for more information.

5.4.1.8 BYPASS Instruction

The BYPASS instruction connects the associated BYPASS Data Register chain between `TDI` and `TDO`. This instruction is used to create a minimum length serial path between the `TDI` and `TDO` ports. The BYPASS Data Register is a single-bit shift register. This instruction improves test efficiency by allowing components that are not needed for a specific test to be bypassed in the JTAG scan chain by loading them with the BYPASS instruction. Please see “BYPASS Data Register” on page 69 for more information.

5.4.2 Data Registers

The JTAG module contains six Data Registers. These include: IDCODE, BYPASS, Boundary Scan, APACC, DPACC, and ABORT serial Data Register chains. Each of these Data Registers is discussed in the following sections.

5.4.2.1 IDCODE Data Register

The format for the 32-bit IDCODE Data Register defined by the *IEEE Standard 1149.1* is shown in Figure 5-3 on page 69. The standard requires that every JTAG-compliant device implement either

the IDCODE instruction or the BYPASS instruction as the default instruction. The LSB of the IDCODE Data Register is defined to be a 1 to distinguish it from the BYPASS instruction, which has an LSB of 0. This allows auto configuration test tools to determine which instruction is the default instruction.

The major uses of the JTAG port are for manufacturer testing of component assembly, and program development and debug. To facilitate the use of auto-configuration debug tools, the IDCODE instruction outputs a value of 0x3BA00477. This value indicates an ARM Cortex-M3, Version 1 processor. This allows the debuggers to automatically configure themselves to work correctly with the Cortex-M3 during debug.

Figure 5-3. IDCODE Register Format

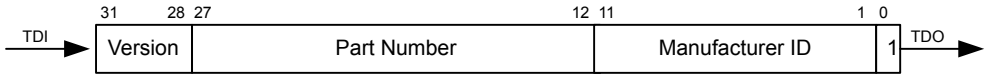

5.4.2.2 BYPASS Data Register

The format for the 1-bit BYPASS Data Register defined by the *IEEE Standard 1149.1* is shown in Figure 5-4 on page 69. The standard requires that every JTAG-compliant device implement either the BYPASS instruction or the IDCODE instruction as the default instruction. The LSB of the BYPASS Data Register is defined to be a 0 to distinguish it from the IDCODE instruction, which has an LSB of 1. This allows auto configuration test tools to determine which instruction is the default instruction.

Figure 5-4. BYPASS Register Format

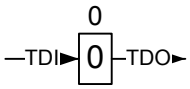

5.4.2.3 Boundary Scan Data Register

The format of the Boundary Scan Data Register is shown in Figure 5-5 on page 70. Each GPIO pin, starting with a GPIO pin next to the JTAG port pins, is included in the Boundary Scan Data Register. Each GPIO pin has three associated digital signals that are included in the chain. These signals are input, output, and output enable, and are arranged in that order as can be seen in the figure. For detailed information on the order of the input, output, and output enable bits for each of the GPIO ports and any other pins included on the Boundary Scan Data Chain, please refer to the Stellaris® Family Boundary Scan Description Language (BSDL) files, downloadable from www.luminarymicro.com.

When the Boundary Scan Data Register is accessed with the SAMPLE/PRELOAD instruction, the input, output, and output enable from each digital pad are sampled and then shifted out of the chain to be verified. The sampling of these values occurs on the rising edge of TCK in the Capture DR state of the TAP controller. While the sampled data is being shifted out of the Boundary Scan chain in the Shift DR state of the TAP controller, new data can be preloaded into the chain for use with the EXTEST and INTEST instructions. These instructions either force data out of the controller, with the EXTEST instruction, or into the controller, with the INTEST instruction.

Figure 5-5. Boundary Scan Register Format

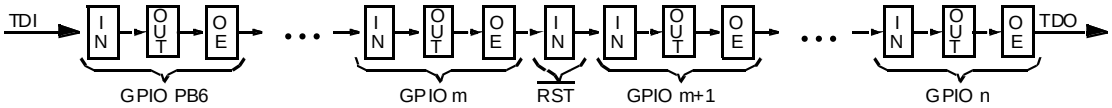

5.4.2.4 APACC Data Register

The format for the 35-bit APACC Data Register defined by ARM is described in the *ARM® Cortex™-M3 Technical Reference Manual*.

5.4.2.5 DPACC Data Register

The format for the 35-bit DPACC Data Register defined by ARM is described in the *ARM® Cortex™-M3 Technical Reference Manual*.

5.4.2.6 ABORT Data Register

The format for the 35-bit ABORT Data Register defined by ARM is described in the *ARM® Cortex™-M3 Technical Reference Manual*.

6 System Control

System control determines the overall operation of the device. It provides information about the device, controls the clocking to the core and individual peripherals, and handles reset detection and reporting.

6.1 Functional Description

The System Control module provides the following capabilities:

- Device identification, see “Device Identification” on page 71
- Local control, such as reset (see “Reset Control” on page 71), power (see “Power Control” on page 74) and clock control (see “Clock Control” on page 75)
- System control (Run, Sleep, and Deep-Sleep modes), see “System Control” on page 79

6.1.1 Device Identification

Several read-only registers provide software with information on the microcontroller, such as version, part number, SRAM size, flash size, and other features. See the **DID0**, **DID1**, and **DC0**-**DC4** registers.

6.1.2 Reset Control

This section discusses aspects of hardware functions during reset as well as system software requirements following the reset sequence.

6.1.2.1 CMOD0 and CMOD1 Test-Mode Control Pins

Two pins, `CMOD0` and `CMOD1`, are defined for use by Luminary Micro for testing the devices during manufacture. They have no end-user function and should not be used. The `CMOD` pins should be connected to ground.

6.1.2.2 Reset Sources

The controller has five sources of reset:

1. External reset input pin ($\overline{\text{RST}}$) assertion, see “$\overline{\text{RST}}$ Pin Assertion” on page 71.
2. Power-on reset (POR), see “Power-On Reset (POR)” on page 72.
3. Internal brown-out (BOR) detector, see “Brown-Out Reset (BOR)” on page 72.
4. Software-initiated reset (with the software reset registers), see “Software Reset” on page 73.
5. A watchdog timer reset condition violation, see “Watchdog Timer Reset” on page 73.

After a reset, the **Reset Cause (RESC)** register is set with the reset cause. The bits in this register are sticky and maintain their state across multiple reset sequences, except when an internal POR is the cause, and then all the other bits in the **RESC** register are cleared except for the POR indicator.

6.1.2.3 $\overline{\text{RST}}$ Pin Assertion

The external reset pin ($\overline{\text{RST}}$) resets the controller. This resets the core and all the peripherals except the JTAG TAP controller (see “JTAG Interface” on page 59). The external reset sequence is as follows:

1. The external reset pin ($\overline{RST}$) is asserted and then de-asserted.
2. The internal reset is released and the core loads from memory the initial stack pointer, the initial program counter, the first instruction designated by the program counter, and begins execution. A few clocks cycles from $\overline{RST}$ de-assertion to the start of the reset sequence is necessary for synchronization.

The external reset timing is shown in Figure 24-5 on page 628.

6.1.2.4 Power-On Reset (POR)

The Power-On Reset (POR) circuit monitors the power supply voltage (V_{DD}). The POR circuit generates a reset signal to the internal logic when the power supply ramp reaches a threshold value (V_{TH}). If the application only uses the POR circuit, the $\overline{RST}$ input needs to be connected to the power supply (V_{DD}) through a pull-up resistor (1K to 10K Ω).

The device must be operating within the specified operating parameters at the point when the on-chip power-on reset pulse is complete. The 3.3-V power supply to the device must reach 3.0 V within 10 msec of it crossing 2.0 V to guarantee proper operation. For applications that require the use of an external reset to hold the device in reset longer than the internal POR, the $\overline{RST}$ input may be used with the circuit as shown in Figure 6-1 on page 72.

Figure 6-1. External Circuitry to Extend Reset

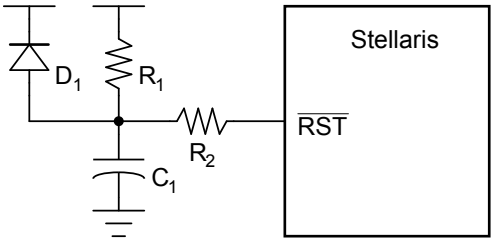

The R_1 and C_1 components define the power-on delay. The R_2 resistor mitigates any leakage from the $\overline{RST}$ input. The diode (D_1) discharges C_1 rapidly when the power supply is turned off.

The Power-On Reset sequence is as follows:

1. The controller waits for the later of external reset ($\overline{RST}$) or internal POR to go inactive.
2. The internal reset is released and the core loads from memory the initial stack pointer, the initial program counter, the first instruction designated by the program counter, and begins execution.

The internal POR is only active on the initial power-up of the controller. The Power-On Reset timing is shown in Figure 24-6 on page 628.

Note: The power-on reset also resets the JTAG controller. An external reset does not.

6.1.2.5 Brown-Out Reset (BOR)

A drop in the input voltage resulting in the assertion of the internal brown-out detector can be used to reset the controller. This is initially disabled and may be enabled by software.

The system provides a brown-out detection circuit that triggers if the power supply (V_{DD}) drops below a brown-out threshold voltage (V_{BTH}). If a brown-out condition is detected, the system may generate a controller interrupt or a system reset.

Brown-out resets are controlled with the **Power-On and Brown-Out Reset Control (PBORCTL)** register. The `BORIOR` bit in the **PBORCTL** register must be set for a brown-out condition to trigger a reset.

The brown-out reset is equivalent to an assertion of the external $\overline{RST}$ input and the reset is held active until the proper V_{DD} level is restored. The **RESC** register can be examined in the reset interrupt handler to determine if a Brown-Out condition was the cause of the reset, thus allowing software to determine what actions are required to recover.

The internal Brown-Out Reset timing is shown in Figure 24-7 on page 628.

6.1.2.6 Software Reset

Software can reset a specific peripheral or generate a reset to the entire system .

Peripherals can be individually reset by software via three registers that control reset signals to each peripheral (see the **SRCRn** registers). If the bit position corresponding to a peripheral is set and subsequently cleared, the peripheral is reset. The encoding of the reset registers is consistent with the encoding of the clock gating control for peripherals and on-chip functions (see “System Control” on page 79). Note that all reset signals for all clocks of the specified unit are asserted as a result of a software-initiated reset.

The entire system can be reset by software by setting the SYSRESETREQ bit in the Cortex-M3 Application Interrupt and Reset Control register resets the entire system including the core. The software-initiated system reset sequence is as follows:

1. A software system reset is initiated by writing the SYSRESETREQ bit in the ARM Cortex-M3 Application Interrupt and Reset Control register.
2. An internal reset is asserted.
3. The internal reset is deasserted and the controller loads from memory the initial stack pointer, the initial program counter, and the first instruction designated by the program counter, and then begins execution.

The software-initiated system reset timing is shown in Figure 24-8 on page 629.

6.1.2.7 Watchdog Timer Reset

The watchdog timer module's function is to prevent system hangs. The watchdog timer can be configured to generate an interrupt to the controller on its first time-out, and to generate a reset signal on its second time-out.

After the first time-out event, the 32-bit counter is reloaded with the value of the **Watchdog Timer Load (WDTLOAD)** register, and the timer resumes counting down from that value. If the timer counts down to its zero state again before the first time-out interrupt is cleared, and the reset signal has been enabled, the watchdog timer asserts its reset signal to the system. The watchdog timer reset sequence is as follows:

1. The watchdog timer times out for the second time without being serviced.
2. An internal reset is asserted.
3. The internal reset is released and the controller loads from memory the initial stack pointer, the initial program counter, the first instruction designated by the program counter, and begins execution.

The watchdog reset timing is shown in Figure 24-9 on page 629.

6.1.3 Power Control

The Stellaris® microcontroller provides an integrated LDO regulator that may be used to provide power to the majority of the controller's internal logic. For power reduction, the LDO regulator provides software a mechanism to adjust the regulated value, in small increments (VSTEP), over the range of 2.25 V to 2.75 V (inclusive)—or 2.5 V ± 10%. The adjustment is made by changing the value of the `VADJ` field in the **LDO Power Control (LDOPCTL)** register.

Figure 6-2 on page 75 shows the power architecture.

Note: On the printed circuit board, use the `LDO` output as the source of `VDD25` input. In addition, the LDO requires decoupling capacitors. See “On-Chip Low Drop-Out (LDO) Regulator Characteristics” on page 622.

Figure 6-2. Power Architecture

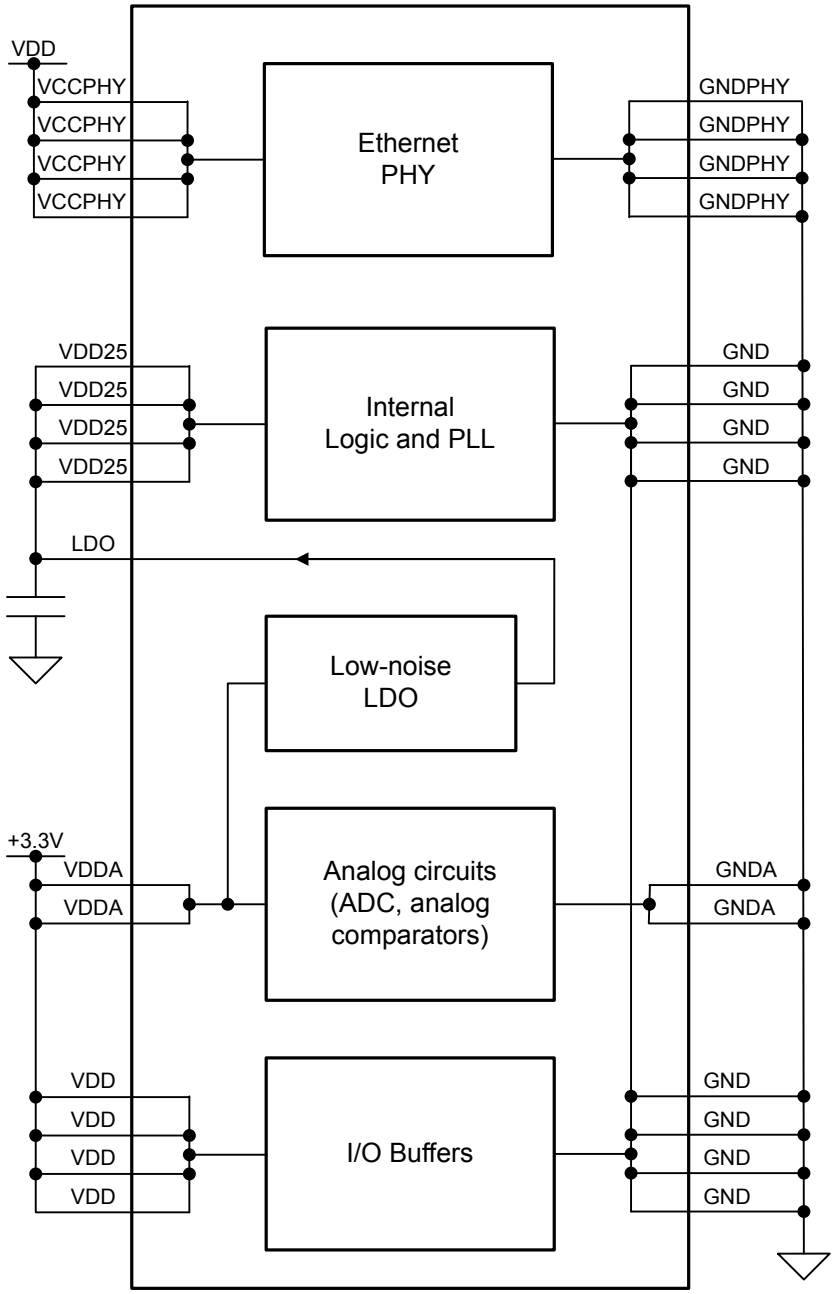

6.1.4 Clock Control

System control determines the control of clocks in this part.

6.1.4.1 Fundamental Clock Sources

There are multiple clock sources for use in the device:

- **Internal Oscillator (IOSC).** The internal oscillator is an on-chip clock source. It does not require the use of any external components. The frequency of the internal oscillator is 12 MHz ± 30%.

Applications that do not depend on accurate clock sources may use this clock source to reduce system cost. The internal oscillator is the clock source the device uses during and following POR. If the main oscillator is required, software must enable the main oscillator following reset and allow the main oscillator to stabilize before changing the clock reference.

- **Main Oscillator (MOSC).** The main oscillator provides a frequency-accurate clock source by one of two means: an external single-ended clock source is connected to the `OSC0` input pin, or an external crystal is connected across the `OSC0` input and `OSC1` output pins. If the PLL is being used, the crystal value must be one of the supported frequencies between 3.579545 MHz through 8.192 MHz (inclusive). If the PLL is not being used, the crystal may be any one of the supported frequencies between 1 MHz and 8.192 MHz. The single-ended clock source range is from DC through the specified speed of the device. The supported crystals are listed in the `XTAL` bit field in the **RCC** register (see page 90).

- **Internal 30-kHz Oscillator.** The internal 30-kHz oscillator is similar to the internal oscillator, except that it provides an operational frequency of 30 kHz ± 50%. It is intended for use during Deep-Sleep power-saving modes. This power-savings mode benefits from reduced internal switching and also allows the main oscillator to be powered down.

- **External Real-Time Oscillator.** The external real-time oscillator provides a low-frequency, accurate clock reference. It is intended to provide the system with a real-time clock source. The real-time oscillator is part of the Hibernation Module (see “Hibernation Module” on page 136) and may also provide an accurate source of Deep-Sleep or Hibernate mode power savings.

The internal system clock (SysClk), is derived from any of the above sources plus two others: the output of the main internal PLL, and the internal oscillator divided by four (3 MHz ± 30%). The frequency of the PLL clock reference must be in the range of 3.579545 MHz to 8.192 MHz (inclusive).

The **Run-Mode Clock Configuration (RCC)** and **Run-Mode Clock Configuration 2 (RCC2)** registers provide control for the system clock. The **RCC2** register is provided to extend fields that offer additional encodings over the **RCC** register. When used, the **RCC2** register field values are used by the logic over the corresponding field in the **RCC** register. In particular, **RCC2** provides for a larger assortment of clock configuration options.

Figure 6-3 on page 77 shows the logic for the main clock tree. The peripheral blocks are driven by the system clock signal and can be individually enabled/disabled. The ADC clock signal is automatically divided down to 16 MHz for proper ADC operation. The PWM clock signal is a synchronous divide of the system clock to provide the PWM circuit with more range (set with `PWMDIV` in **RCC**).

Figure 6-3. Main Clock Tree

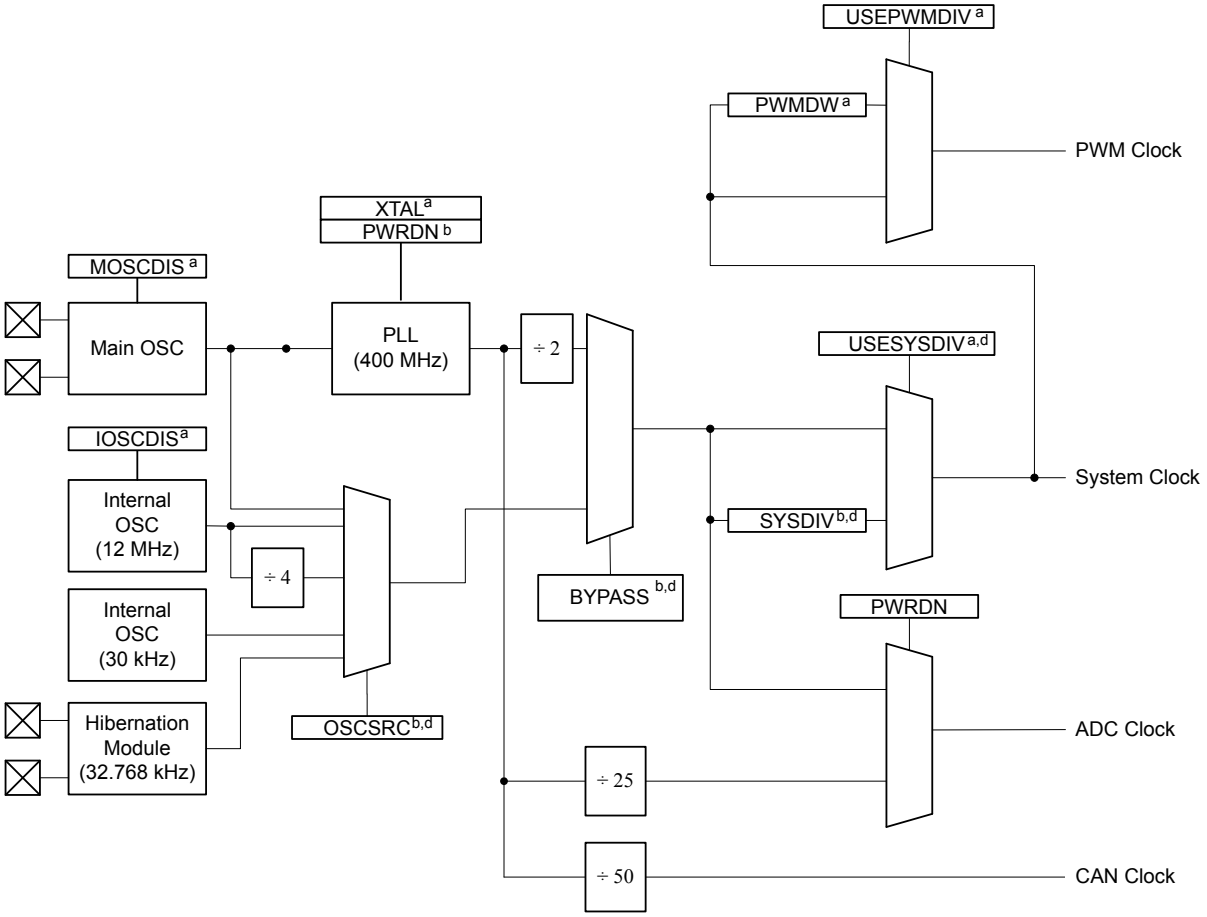

a. Control provided by RCC register bit/field.
b. Control provided by RCC register bit/field or RCC2 register bit/field, if overridden with RCC2 register bit USERCC2.
c. Control provided by RCC2 register bit/field.
d. Also may be controlled by DSLPCLKCFG when in deep sleep mode.

Note: The figure above shows all features available on all Stellaris® Fury-class devices.

6.1.4.2 Crystal Configuration for the Main Oscillator (MOSC)

The main oscillator supports the use of a select number of crystals. If the main oscillator is used by the PLL as a reference clock, the supported range of crystals is 3.579545 to 8.192 MHz, otherwise, the range of supported crystals is 1 to 8.192 MHz.

The XTAL bit in the **RCC** register (see page 90) describes the available crystal choices and default programming values.

Software configures the **RCC** register XTAL field with the crystal number. If the PLL is used in the design, the XTAL field value is internally translated to the PLL settings.

6.1.4.3 Main PLL Frequency Configuration

The main PLL is disabled by default during power-on reset and is enabled later by software if required. Software specifies the output divisor to set the system clock frequency, and enables the main PLL to drive the output. The PLL operates at 400 MHz, but is divided by two prior to the application of the output divisor.

If the main oscillator provides the clock reference to the main PLL, the translation provided by hardware and used to program the PLL is available for software in the **XTAL to PLL Translation (PLLCFG)** register (see page 95). The internal translation provides a translation within ± 1% of the targeted PLL VCO frequency.

The Crystal Value field (XTAL) on page 90 describes the available crystal choices and default programming of the **PLLCFG** register. The crystal number is written into the XTAL field of the **Run-Mode Clock Configuration (RCC)** register. Any time the XTAL field changes, the new settings are translated and the internal PLL settings are updated.

To configure the external 32-kHz real-time oscillator as the PLL input reference, program the OSCRC2 field in the **Run-Mode Clock Configuration 2 (RCC2)** register to be 0x7.

6.1.4.4 PLL Modes

The PLL has two modes of operation: Normal and Power-Down

- Normal: The PLL multiplies the input clock reference and drives the output.
- Power-Down: Most of the PLL internal circuitry is disabled and the PLL does not drive the output.

The modes are programmed using the **RCC**/**RCC2** register fields (see page 90 and page 96).

6.1.4.5 PLL Operation

If a PLL configuration is changed, the PLL output frequency is unstable until it reconverges (relocks) to the new setting. The time between the configuration change and relock is T_{READY} (see Table 24-8 on page 625). During the relock time, the affected PLL is not usable as a clock reference.

The PLL is changed by one of the following:

- Change to the XTAL value in the **RCC** register—writes of the same value do not cause a relock.
- Change in the PLL from Power-Down to Normal mode.

A counter is defined to measure the T_{READY} requirement. The counter is clocked by the main oscillator. The range of the main oscillator has been taken into account and the down counter is set to 0x1200 (that is, ~600 µs at an 8.192 MHz external oscillator clock). Hardware is provided to keep the PLL from being used as a system clock until the T_{READY} condition is met after one of the two changes above. It is the user's responsibility to have a stable clock source (like the main oscillator) before the **RCC**/**RCC2** register is switched to use the PLL.

If the main PLL is enabled and the system clock is switched to use the PLL in one step, the system control hardware continues to clock the controller from the oscillator selected by the **RCC**/**RCC2** register until the main PLL is stable (T_{READY} time met), after which it changes to the PLL. Software can use many methods to ensure that the system is clocked from the main PLL, including periodically polling the PLLLRIS bit in the **Raw Interrupt Status (RIS)** register, and enabling the PLL Lock interrupt.

6.1.5 System Control

For power-savings purposes, the **RCGCn** , **SCGCn** , and **DCGCn** registers control the clock gating logic for each peripheral or block in the system while the controller is in Run, Sleep, and Deep-Sleep mode, respectively.

There are four levels of operation for the device defined as:

- **Run Mode.** In Run mode, the controller actively executes code. Run mode provides normal operation of the processor and all of the peripherals that are currently enabled by the **RCGCn** registers. The system clock can be any of the available clock sources including the PLL.

- **Sleep Mode.** In Sleep mode, the clock frequency of the active peripherals is unchanged, but the processor and the memory subsystem are not clocked and therefore no longer execute code. Sleep mode is entered by the Cortex-M3 core executing a `WFI(Wait for Interrupt)` instruction. Any properly configured interrupt event in the system will bring the processor back into Run mode. See the system control NVIC section of the *ARM® Cortex™-M3 Technical Reference Manual* for more details.

  Peripherals are clocked that are enabled in the **SCGCn** register when auto-clock gating is enabled (see the **RCC** register) or the **RCGCn** register when the auto-clock gating is disabled. The system clock has the same source and frequency as that during Run mode.

- **Deep-Sleep Mode.** In Deep-Sleep mode, the clock frequency of the active peripherals may change (depending on the Run mode clock configuration) in addition to the processor clock being stopped. An interrupt returns the device to Run mode from one of the sleep modes; the sleep modes are entered on request from the code. Deep-Sleep mode is entered by first writing the Deep Sleep Enable bit in the ARM Cortex-M3 NVIC system control register and then executing a `WFI` instruction. Any properly configured interrupt event in the system will bring the processor back into Run mode. See the system control NVIC section of the *ARM® Cortex™-M3 Technical Reference Manual* for more details.

  The Cortex-M3 processor core and the memory subsystem are not clocked. Peripherals are clocked that are enabled in the **DCGCn** register when auto-clock gating is enabled (see the **RCC** register) or the **RCGCn** register when auto-clock gating is disabled. The system clock source is the main oscillator by default or the internal oscillator specified in the **DSLPCLKCFG** register if one is enabled. When the **DSLPCLKCFG** register is used, the internal oscillator is powered up, if necessary, and the main oscillator is powered down. If the PLL is running at the time of the WFI instruction, hardware will power the PLL down and override the `SYSDIV` field of the active **RCC**/**RCC2** register, to be determined by the `DSDIVORIDE` setting in the **DSLPCLKCFG** register, up to /16 or /64 respectively. When the Deep-Sleep exit event occurs, hardware brings the system clock back to the source and frequency it had at the onset of Deep-Sleep mode before enabling the clocks that had been stopped during the Deep-Sleep duration.

- **Hibernate Mode.** In this mode, the power supplies are turned off to the main part of the device and only the Hibernation module's circuitry is active. An external wake event or RTC event is required to bring the device back to Run mode. The Cortex-M3 processor and peripherals outside of the Hibernation module see a normal "power on" sequence and the processor starts running code. It can determine that it has been restarted from Hibernate mode by inspecting the Hibernation module registers.

6.2 Initialization and Configuration

The PLL is configured using direct register writes to the **RCC**/**RCC2** register. If the **RCC2** register is being used, the USERCC2 bit must be set and the appropriate **RCC2** bit/field is used. The steps required to successfully change the PLL-based system clock are:

1. Bypass the PLL and system clock divider by setting the BYPASS bit and clearing the USESYS bit in the **RCC** register. This configures the system to run off a "raw" clock source and allows for the new PLL configuration to be validated before switching the system clock to the PLL.
2. Select the crystal value (XTAL) and oscillator source (OSCSRC), and clear the PWRDN bit in **RCC**/**RCC2**. Setting the XTAL field automatically pulls valid PLL configuration data for the appropriate crystal, and clearing the PWRDN bit powers and enables the PLL and its output.
3. Select the desired system divider (SYSDIV) in **RCC**/**RCC2** and set the USESYS bit in **RCC**. The SYSDIV field determines the system frequency for the microcontroller.
4. Wait for the PLL to lock by polling the PLLLRIS bit in the **Raw Interrupt Status (RIS)** register.
5. Enable use of the PLL by clearing the BYPASS bit in **RCC**/**RCC2**.

6.3 Register Map

Table 6-1 on page 80 lists the System Control registers, grouped by function. The offset listed is a hexadecimal increment to the register's address, relative to the System Control base address of 0x400F.E000.

Note: Spaces in the System Control register space that are not used are reserved for future or internal use by Luminary Micro, Inc. Software should not modify any reserved memory address.

Table 6-1. System Control Register Map

Offset	Name	Type	Reset	Description	See page
0x000	DID0	RO	-	Device Identification 0	82
0x004	DID1	RO	-	Device Identification 1	99
0x008	DC0	RO	0x00FF.007F	Device Capabilities 0	101
0x010	DC1	RO	0x0111.32FF	Device Capabilities 1	102
0x014	DC2	RO	0x010F.1313	Device Capabilities 2	104
0x018	DC3	RO	0x830F.81FF	Device Capabilities 3	106
0x01C	DC4	RO	0x5100.007F	Device Capabilities 4	108
0x030	PBORCTL	R/W	0x0000.7FFD	Brown-Out Reset Control	84
0x034	LDOPCTL	R/W	0x0000.0000	LDO Power Control	85
0x040	SRCR0	R/W	0x00000000	Software Reset Control 0	131
0x044	SRCR1	R/W	0x00000000	Software Reset Control 1	132
0x048	SRCR2	R/W	0x00000000	Software Reset Control 2	134

Offset	Name	Type	Reset	Description	See page
0x050	RIS	RO	0x0000.0000	Raw Interrupt Status	86
0x054	IMC	R/W	0x0000.0000	Interrupt Mask Control	87
0x058	MISC	R/W1C	0x0000.0000	Masked Interrupt Status and Clear	88
0x05C	RESC	R/W	-	Reset Cause	89
0x060	RCC	R/W	0x078E.3AD1	Run-Mode Clock Configuration	90
0x064	PLLCFG	RO	-	XTAL to PLL Translation	95
0x070	RCC2	R/W	0x0780.2810	Run-Mode Clock Configuration 2	96
0x100	RCGC0	R/W	0x00000040	Run Mode Clock Gating Control Register 0	110
0x104	RCGC1	R/W	0x00000000	Run Mode Clock Gating Control Register 1	116
0x108	RCGC2	R/W	0x00000000	Run Mode Clock Gating Control Register 2	125
0x110	SCGC0	R/W	0x00000040	Sleep Mode Clock Gating Control Register 0	112
0x114	SCGC1	R/W	0x00000000	Sleep Mode Clock Gating Control Register 1	119
0x118	SCGC2	R/W	0x00000000	Sleep Mode Clock Gating Control Register 2	127
0x120	DCGC0	R/W	0x00000040	Deep Sleep Mode Clock Gating Control Register 0	114
0x124	DCGC1	R/W	0x00000000	Deep Sleep Mode Clock Gating Control Register 1	122
0x128	DCGC2	R/W	0x00000000	Deep Sleep Mode Clock Gating Control Register 2	129
0x144	DSLPCLKCFG	R/W	0x0780.0000	Deep Sleep Clock Configuration	98

6.4 Register Descriptions

All addresses given are relative to the System Control base address of 0x400F.E000.

Register 1: Device Identification 0 (DID0), offset 0x000

This register identifies the version of the device.

Device Identification 0 (DID0)

Base 0x400F.E000
Offset 0x000
Type RO, reset -

	31	30	29	28	27	26	25	24	23	22	21	20	19	18	17	16
	reserved	VER			reserved				CLASS							
Type	RO	RO	RO	RO	RO	RO	RO	RO	RO	RO	RO	RO	RO	RO	RO	RO
Reset	0	0	0	1	0	0	0	0	0	0	0	0	0	0	0	1

	15	14	13	12	11	10	9	8	7	6	5	4	3	2	1	0
	MAJOR								MINOR							
Type	RO	RO	RO	RO	RO	RO	RO	RO	RO	RO	RO	RO	RO	RO	RO	RO
Reset	-	-	-	-	-	-	-	-	-	-	-	-	-	-	-	-

Bit/Field	Name	Type	Reset	Description
31	reserved	RO	0	Software should not rely on the value of a reserved bit. To provide compatibility with future products, the value of a reserved bit should be preserved across a read-modify-write operation.
30:28	VER	RO	0x1	DID0 Version This field defines the **DID0** register format version. The version number is numeric. The value of the `VER` field is encoded as follows: Value Description 0x1 Second version of the **DID0** register format.
27:24	reserved	RO	0x0	Software should not rely on the value of a reserved bit. To provide compatibility with future products, the value of a reserved bit should be preserved across a read-modify-write operation.
23:16	CLASS	RO	0x1	Device Class The `CLASS` field value identifies the internal design from which all mask sets are generated for all devices in a particular product line. The `CLASS` field value is changed for new product lines, for changes in fab process (for example, a remap or shrink), or any case where the `MAJOR` or `MINOR` fields require differentiation from prior devices. The value of the `CLASS` field is encoded as follows (all other encodings are reserved): Value Description 0x1 Stellaris® Fury-class devices.

Bit/Field	Name	Type	Reset	Description
15:8	MAJOR	RO	-	Major Revision This field specifies the major revision number of the device. The major revision reflects changes to base layers of the design. The major revision number is indicated in the part number as a letter (A for first revision, B for second, and so on). This field is encoded as follows: Value Description 0x0 Revision A (initial device) 0x1 Revision B (first base layer revision) 0x2 Revision C (second base layer revision) and so on.
7:0	MINOR	RO	-	Minor Revision This field specifies the minor revision number of the device. The minor revision reflects changes to the metal layers of the design. The `MINOR` field value is reset when the `MAJOR` field is changed. This field is numeric and is encoded as follows: Value Description 0x0 Initial device, or a major revision update. 0x1 First metal layer change. 0x2 Second metal layer change. and so on.

Register 2: Brown-Out Reset Control (PBORCTL), offset 0x030

This register is responsible for controlling reset conditions after initial power-on reset.

Brown-Out Reset Control (PBORCTL)

Base 0x400F.E000
Offset 0x030
Type R/W, reset 0x0000.7FFD

	31	30	29	28	27	26	25	24	23	22	21	20	19	18	17	16
	reserved															
Type	RO	RO	RO	RO	RO	RO	RO	RO	RO	RO	RO	RO	RO	RO	RO	RO
Reset	0	0	0	0	0	0	0	0	0	0	0	0	0	0	0	0

	15	14	13	12	11	10	9	8	7	6	5	4	3	2	1	0
	reserved														BORIOR	reserved
Type	RO	RO	RO	RO	RO	RO	RO	RO	RO	RO	RO	RO	RO	RO	R/W	RO
Reset	0	0	0	0	0	0	0	0	0	0	0	0	0	0	0	0

Bit/Field	Name	Type	Reset	Description
31:2	reserved	RO	0x0	Software should not rely on the value of a reserved bit. To provide compatibility with future products, the value of a reserved bit should be preserved across a read-modify-write operation.
1	BORIOR	R/W	0	BOR Interrupt or Reset This bit controls how a BOR event is signaled to the controller. If set, a reset is signaled. Otherwise, an interrupt is signaled.
0	reserved	RO	0	Software should not rely on the value of a reserved bit. To provide compatibility with future products, the value of a reserved bit should be preserved across a read-modify-write operation.

Register 3: LDO Power Control (LDOPCTL), offset 0x034

The VADJ field in this register adjusts the on-chip output voltage (V_{OUT}).

LDO Power Control (LDOPCTL)

Base 0x400F.E000
Offset 0x034
Type R/W, reset 0x0000.0000

	31	30	29	28	27	26	25	24	23	22	21	20	19	18	17	16
	reserved															
Type	RO	RO	RO	RO	RO	RO	RO	RO	RO	RO	RO	RO	RO	RO	RO	RO
Reset	0	0	0	0	0	0	0	0	0	0	0	0	0	0	0	0

	15	14	13	12	11	10	9	8	7	6	5	4	3	2	1	0
	reserved										VADJ					
Type	RO	RO	RO	RO	RO	RO	RO	RO	RO	RO	R/W	R/W	R/W	R/W	R/W	R/W
Reset	0	0	0	0	0	0	0	0	0	0	0	0	0	0	0	0

Bit/Field	Name	Type	Reset	Description
31:6	reserved	RO	0	Software should not rely on the value of a reserved bit. To provide compatibility with future products, the value of a reserved bit should be preserved across a read-modify-write operation.
5:0	VADJ	R/W	0x0	LDO Output Voltage This field sets the on-chip output voltage. The programming values for the VADJ field are provided below.

Value	V_{OUT} (V)
0x00	2.50
0x01	2.45
0x02	2.40
0x03	2.35
0x04	2.30
0x05	2.25
0x06-0x3F	Reserved
0x1B	2.75
0x1C	2.70
0x1D	2.65
0x1E	2.60
0x1F	2.55

Register 4: Raw Interrupt Status (RIS), offset 0x050

Central location for system control raw interrupts. These are set and cleared by hardware.

Raw Interrupt Status (RIS)

Base 0x400F.E000
Offset 0x050
Type RO, reset 0x0000.0000

	31	30	29	28	27	26	25	24	23	22	21	20	19	18	17	16
	reserved															
Type	RO	RO	RO	RO	RO	RO	RO	RO	RO	RO	RO	RO	RO	RO	RO	RO
Reset	0	0	0	0	0	0	0	0	0	0	0	0	0	0	0	0

	15	14	13	12	11	10	9	8	7	6	5	4	3	2	1	0
	reserved									PLLLRIS	reserved				BORRIS	reserved
Type	RO	RO	RO	RO	RO	RO	RO	RO	RO	RO	RO	RO	RO	RO	RO	RO
Reset	0	0	0	0	0	0	0	0	0	0	0	0	0	0	0	0

Bit/Field	Name	Type	Reset	Description
31:7	reserved	RO	0	Software should not rely on the value of a reserved bit. To provide compatibility with future products, the value of a reserved bit should be preserved across a read-modify-write operation.
6	PLLLRIS	RO	0	PLL Lock Raw Interrupt Status This bit is set when the PLL T_{READY} Timer asserts.
5:2	reserved	RO	0	Software should not rely on the value of a reserved bit. To provide compatibility with future products, the value of a reserved bit should be preserved across a read-modify-write operation.
1	BORRIS	RO	0	Brown-Out Reset Raw Interrupt Status This bit is the raw interrupt status for any brown-out conditions. If set, a brown-out condition is currently active. This is an unregistered signal from the brown-out detection circuit. An interrupt is reported if the `BORIM` bit in the **IMC** register is set and the `BORIOR` bit in the **PBORCTL** register is cleared.
0	reserved	RO	0	Software should not rely on the value of a reserved bit. To provide compatibility with future products, the value of a reserved bit should be preserved across a read-modify-write operation.

Register 5: Interrupt Mask Control (IMC), offset 0x054

Central location for system control interrupt masks.

Interrupt Mask Control (IMC)

Base 0x400F.E000
Offset 0x054
Type R/W, reset 0x0000.0000

	31	30	29	28	27	26	25	24	23	22	21	20	19	18	17	16
	reserved															
Type	RO	RO	RO	RO	RO	RO	RO	RO	RO	RO	RO	RO	RO	RO	RO	RO
Reset	0	0	0	0	0	0	0	0	0	0	0	0	0	0	0	0

	15	14	13	12	11	10	9	8	7	6	5	4	3	2	1	0
	reserved									PLLLIM	reserved				BORIM	reserved
Type	RO	RO	RO	RO	RO	RO	RO	RO	RO	R/W	RO	RO	RO	RO	R/W	RO
Reset	0	0	0	0	0	0	0	0	0	0	0	0	0	0	0	0

Bit/Field	Name	Type	Reset	Description
31:7	reserved	RO	0	Software should not rely on the value of a reserved bit. To provide compatibility with future products, the value of a reserved bit should be preserved across a read-modify-write operation.
6	PLLLIM	R/W	0	PLL Lock Interrupt Mask This bit specifies whether a PLL Lock interrupt is promoted to a controller interrupt. If set, an interrupt is generated if `PLLLRIS` in **RIS** is set; otherwise, an interrupt is not generated.
5:2	reserved	RO	0	Software should not rely on the value of a reserved bit. To provide compatibility with future products, the value of a reserved bit should be preserved across a read-modify-write operation.
1	BORIM	R/W	0	Brown-Out Reset Interrupt Mask This bit specifies whether a brown-out condition is promoted to a controller interrupt. If set, an interrupt is generated if `BORRIS` is set; otherwise, an interrupt is not generated.
0	reserved	RO	0	Software should not rely on the value of a reserved bit. To provide compatibility with future products, the value of a reserved bit should be preserved across a read-modify-write operation.

Register 6: Masked Interrupt Status and Clear (MISC), offset 0x058

On a read, this register gives the current masked status value of the corresponding interrupt. All of the bits are R/W1C and this action also clears the corresponding raw interrupt bit in the **RIS** register (see page 86).

Masked Interrupt Status and Clear (MISC)

Base 0x400F.E000
Offset 0x058
Type R/W1C, reset 0x0000.0000

	31	30	29	28	27	26	25	24	23	22	21	20	19	18	17	16
	reserved															
Type	RO	RO	RO	RO	RO	RO	RO	RO	RO	RO	RO	RO	RO	RO	RO	RO
Reset	0	0	0	0	0	0	0	0	0	0	0	0	0	0	0	0

	15	14	13	12	11	10	9	8	7	6	5	4	3	2	1	0
	reserved									PLLLMIS	reserved				BORMIS	reserved
Type	RO	RO	RO	RO	RO	RO	RO	RO	RO	R/W1C	RO	RO	RO	RO	R/W1C	RO
Reset	0	0	0	0	0	0	0	0	0	0	0	0	0	0	0	0

Bit/Field	Name	Type	Reset	Description
31:7	reserved	RO	0	Software should not rely on the value of a reserved bit. To provide compatibility with future products, the value of a reserved bit should be preserved across a read-modify-write operation.
6	PLLLMIS	R/W1C	0	PLL Lock Masked Interrupt Status This bit is set when the PLL T_{READY} timer asserts. The interrupt is cleared by writing a 1 to this bit.
5:2	reserved	RO	0	Software should not rely on the value of a reserved bit. To provide compatibility with future products, the value of a reserved bit should be preserved across a read-modify-write operation.
1	BORMIS	R/W1C	0	BOR Masked Interrupt Status The `BORMIS` is simply the `BORRIS` ANDed with the mask value, `BORIM`.
0	reserved	RO	0	Software should not rely on the value of a reserved bit. To provide compatibility with future products, the value of a reserved bit should be preserved across a read-modify-write operation.

Register 7: Reset Cause (RESC), offset 0x05C

This register is set with the reset cause after reset. The bits in this register are sticky and maintain their state across multiple reset sequences, except when an external reset is the cause, and then all the other bits in the **RESC** register are cleared.

Reset Cause (RESC)

Base 0x400F.E000
Offset 0x05C
Type R/W, reset -

	31	30	29	28	27	26	25	24	23	22	21	20	19	18	17	16
	reserved															
Type	RO	RO	RO	RO	RO	RO	RO	RO	RO	RO	RO	RO	RO	RO	RO	RO
Reset	0	0	0	0	0	0	0	0	0	0	0	0	0	0	0	0

	15	14	13	12	11	10	9	8	7	6	5	4	3	2	1	0
	reserved											SW	WDT	BOR	POR	EXT
Type	RO	RO	RO	RO	RO	RO	RO	RO	RO	RO	RO	R/W	R/W	R/W	R/W	R/W
Reset	0	0	0	0	0	0	0	0	0	0	0	-	-	-	-	-

Bit/Field	Name	Type	Reset	Description
31:5	reserved	RO	0	Software should not rely on the value of a reserved bit. To provide compatibility with future products, the value of a reserved bit should be preserved across a read-modify-write operation.
4	SW	R/W	-	Software Reset When set, indicates a software reset is the cause of the reset event.
3	WDT	R/W	-	Watchdog Timer Reset When set, indicates a watchdog reset is the cause of the reset event.
2	BOR	R/W	-	Brown-Out Reset When set, indicates a brown-out reset is the cause of the reset event.
1	POR	R/W	-	Power-On Reset When set, indicates a power-on reset is the cause of the reset event.
0	EXT	R/W	-	External Reset When set, indicates an external reset ($\overline{RST}$ assertion) is the cause of the reset event.

Register 8: Run-Mode Clock Configuration (RCC), offset 0x060

This register is defined to provide source control and frequency speed.

Run-Mode Clock Configuration (RCC)

Base 0x400F.E000
Offset 0x060
Type R/W, reset 0x078E.3AD1

	31	30	29	28	27	26	25	24	23	22	21	20	19	18	17	16
	reserved				ACG	SYSDIV				USESYSDIV	reserved	USEPWMDIV	PWMDIV			reserved
Type	RO	RO	RO	RO	R/W	R/W	R/W	R/W	R/W	R/W	RO	R/W	R/W	R/W	R/W	RO
Reset	0	0	0	0	0	1	1	1	1	0	0	0	1	1	1	0

	15	14	13	12	11	10	9	8	7	6	5	4	3	2	1	0
	reserved		PWRDN	reserved	BYPASS	reserved	XTAL				OSCSRC		reserved		IOSCDIS	MOSCDIS
Type	RO	RO	R/W	RO	R/W	RO	R/W	R/W	R/W	R/W	R/W	R/W	RO	RO	R/W	R/W
Reset	0	0	1	1	1	0	1	0	1	1	0	1	0	0	0	1

Bit/Field	Name	Type	Reset	Description
31:28	reserved	RO	0x0	Software should not rely on the value of a reserved bit. To provide compatibility with future products, the value of a reserved bit should be preserved across a read-modify-write operation.
27	ACG	R/W	0	Auto Clock Gating This bit specifies whether the system uses the **Sleep-Mode Clock Gating Control (SCGCn)** registers and **Deep-Sleep-Mode Clock Gating Control (DCGCn)** registers if the controller enters a Sleep or Deep-Sleep mode (respectively). If set, the **SCGCn** or **DCGCn** registers are used to control the clocks distributed to the peripherals when the controller is in a sleep mode. Otherwise, the **Run-Mode Clock Gating Control (RCGCn)** registers are used when the controller enters a sleep mode. The **RCGCn** registers are always used to control the clocks in Run mode. This allows peripherals to consume less power when the controller is in a sleep mode and the peripheral is unused.

Bit/Field	Name	Type	Reset	Description
26:23	SYSDIV	R/W	0xF	System Clock Divisor Specifies which divisor is used to generate the system clock from the PLL output. Although the PLL VCO frequency is 400 MHz, it is predivided by 2 before the divisor is applied. When reading the **Run-Mode Clock Configuration (RCC)** register (see page 90), the `SYSDIV` value is `MINSYSDIV` if a lower divider was requested and the PLL is being used. This lower value is allowed to divide a non-PLL source.
22	USESYSDIV	R/W	0	Enable System Clock Divider Use the system clock divider as the source for the system clock. The system clock divider is forced to be used when the PLL is selected as the source.
21	reserved	RO	0	Software should not rely on the value of a reserved bit. To provide compatibility with future products, the value of a reserved bit should be preserved across a read-modify-write operation.
20	USEPWMDIV	R/W	0	Enable PWM Clock Divisor Use the PWM clock divider as the source for the PWM clock.

Value	Divisor (BYPASS=1)	Frequency (BYPASS=0)
0x0	reserved	reserved
0x1	/2	reserved
0x2	/3	reserved
0x3	/4	50 MHz
0x4	/5	40 MHz
0x5	/6	33.33 MHz
0x6	/7	28.57 MHz
0x7	/8	25 MHz
0x8	/9	22.22 MHz
0x9	/10	20 MHz
0xA	/11	18.18 MHz
0xB	/12	16.67 MHz
0xC	/13	15.38 MHz
0xD	/14	14.29 MHz
0xE	/15	13.33 MHz
0xF	/16	12.5 MHz (default)

Bit/Field	Name	Type	Reset	Description
19:17	PWMDIV	R/W	0x7	PWM Unit Clock Divisor This field specifies the binary divisor used to predivide the system clock down for use as the timing reference for the PWM module. This clock is only power 2 divide and rising edge is synchronous without phase shift from the system clock. Value Divisor 0x0 /2 0x1 /4 0x2 /8 0x3 /16 0x4 /32 0x5 /64 0x6 /64 0x7 /64 (default)
16:14	reserved	RO	0	Software should not rely on the value of a reserved bit. To provide compatibility with future products, the value of a reserved bit should be preserved across a read-modify-write operation.
13	PWRDN	R/W	1	PLL Power Down This bit connects to the PLL PWRDN input. The reset value of 1 powers down the PLL.
12	reserved	RO	1	Software should not rely on the value of a reserved bit. To provide compatibility with future products, the value of a reserved bit should be preserved across a read-modify-write operation.
11	BYPASS	R/W	1	PLL Bypass Chooses whether the system clock is derived from the PLL output or the OSC source. If set, the clock that drives the system is the OSC source. Otherwise, the clock that drives the system is the PLL output clock divided by the system divider. **Note:** The ADC must be clocked from the PLL or directly from a 14-MHz to 18-MHz clock source to operate properly. While the ADC works in a 14-18 MHz range, to maintain a 1 M sample/second rate, the ADC must be provided a 16-MHz clock source.
10	reserved	RO	0	Software should not rely on the value of a reserved bit. To provide compatibility with future products, the value of a reserved bit should be preserved across a read-modify-write operation.

Bit/Field	Name	Type	Reset	Description
9:6	XTAL	R/W	0xB	Crystal Value This field specifies the crystal value attached to the main oscillator. The encoding for this field is provided below.

Value	Crystal Frequency (MHz) Not Using the PLL	Crystal Frequency (MHz) Using the PLL
0x0	1.000	reserved
0x1	1.8432	reserved
0x2	2.000	reserved
0x3	2.4576	reserved
0x4	3.579545 MHz	
0x5	3.6864 MHz	
0x6	4 MHz	
0x7	4.096 MHz	
0x8	4.9152 MHz	
0x9	5 MHz	
0xA	5.12 MHz	
0xB	6 MHz (reset value)	
0xC	6.144 MHz	
0xD	7.3728 MHz	
0xE	8 MHz	
0xF	8.192 MHz	

Bit/Field	Name	Type	Reset	Description
5:4	OSCSRC	R/W	0x1	Oscillator Source Selects the input source for the OSC. The values are:

Value	Input Source
0x0	MOSC Main oscillator
0x1	IOSC Internal oscillator (default)
0x2	IOSC/4 Internal oscillator / 4 (this is necessary if used as input to PLL)
0x3	30 kHz 30-KHz internal oscillator

For additional oscillator sources, see the **RCC2** register.

Bit/Field	Name	Type	Reset	Description
3:2	reserved	RO	0x0	Software should not rely on the value of a reserved bit. To provide compatibility with future products, the value of a reserved bit should be preserved across a read-modify-write operation.
1	IOSCDIS	R/W	0	Internal Oscillator Disable 0: Internal oscillator (IOSC) is enabled. 1: Internal oscillator is disabled.

Bit/Field	Name	Type	Reset	Description
0	MOSCDIS	R/W	1	Main Oscillator Disable 0: Main oscillator is enabled . 1: Main oscillator is disabled (default).

Register 9: XTAL to PLL Translation (PLLCFG), offset 0x064

This register provides a means of translating external crystal frequencies into the appropriate PLL settings. This register is initialized during the reset sequence and updated anytime that the XTAL field changes in the **Run-Mode Clock Configuration (RCC)** register (see page 90).

The PLL frequency is calculated using the **PLLCFG** field values, as follows:

```
PLLFreq = OSCFreq * F / (R + 1)
```

XTAL to PLL Translation (PLLCFG)

Base 0x400F.E000
Offset 0x064
Type RO, reset -

	31	30	29	28	27	26	25	24	23	22	21	20	19	18	17	16
	reserved															
Type	RO	RO	RO	RO	RO	RO	RO	RO	RO	RO	RO	RO	RO	RO	RO	RO
Reset	0	0	0	0	0	0	0	0	0	0	0	0	0	0	0	0

	15	14	13	12	11	10	9	8	7	6	5	4	3	2	1	0
	reserved		F									R				
Type	RO	RO	RO	RO	RO	RO	RO	RO	RO	RO	RO	RO	RO	RO	RO	RO
Reset	0	0	-	-	-	-	-	-	-	-	-	-	-	-	-	-

Bit/Field	Name	Type	Reset	Description
31:14	reserved	RO	0x0	Software should not rely on the value of a reserved bit. To provide compatibility with future products, the value of a reserved bit should be preserved across a read-modify-write operation.
13:5	F	RO	-	PLL F Value This field specifies the value supplied to the PLL's F input.
4:0	R	RO	-	PLL R Value This field specifies the value supplied to the PLL's R input.

Register 10: Run-Mode Clock Configuration 2 (RCC2), offset 0x070

This register overrides the **RCC** equivalent register fields when the `USERCC2` bit is set, allowing the extended capabilities of the **`RCC2`** register to be used while also providing a means to be backward-compatible to previous parts. The fields within the **RCC2** register occupy the same bit positions as they do within the **RCC** register as LSB-justified.

The `SYSDIV2` field is 2 bits wider than the `SYSDIV` field in the **RCC** register so that additional larger divisors are possible, allowing a lower system clock frequency for improved Deep Sleep power consumption. The PLL VCO frequency is 400 MHz.

Run-Mode Clock Configuration 2 (RCC2)

Base 0x400F.E000
Offset 0x070
Type R/W, reset 0x0780.2810

	31	30	29	28	27	26	25	24	23	22	21	20	19	18	17	16
	USERCC2	reserved		SYSDIV2						reserved						
Type	R/W	RO	RO	R/W	R/W	R/W	R/W	R/W	R/W	RO	RO	RO	RO	RO	RO	RO
Reset	0	0	0	0	0	1	1	1	1	0	0	0	0	0	0	0

	15	14	13	12	11	10	9	8	7	6	5	4	3	2	1	0
	reserved		PWRDN2	reserved	BYPASS2	reserved				OSCSRC2			reserved			
Type	RO	RO	R/W	RO	R/W	RO	RO	RO	RO	R/W	R/W	R/W	RO	RO	RO	RO
Reset	0	0	1	0	1	0	0	0	0	0	0	1	0	0	0	0

Bit/Field	Name	Type	Reset	Description
31	USERCC2	R/W	0	Use RCC2 When set, overrides the **RCC** register fields.
30:29	reserved	RO	0	Software should not rely on the value of a reserved bit. To provide compatibility with future products, the value of a reserved bit should be preserved across a read-modify-write operation.
28:23	SYSDIV2	R/W	0x0F	System Clock Divisor Specifies which divisor is used to generate the system clock from the PLL output. Although the PLL VCO frequency is 400 MHz, it is predivided by 2 before the divisor is applied. This field is wider than the **RCC** register `SYSDIV` field in order to provide additional divisor values. This permits the system clock to be run at much lower frequencies during Deep Sleep mode. For example, where the **RCC** register `SYSDIV` encoding of 1111 provides /16, the **RCC2** register `SYSDIV2` encoding of 111111 provides /64.
22:14	reserved	RO	0	Software should not rely on the value of a reserved bit. To provide compatibility with future products, the value of a reserved bit should be preserved across a read-modify-write operation.
13	PWRDN2	R/W	1	Power-Down PLL When set, powers down the PLL.
12	reserved	RO	0	Software should not rely on the value of a reserved bit. To provide compatibility with future products, the value of a reserved bit should be preserved across a read-modify-write operation.

Bit/Field	Name	Type	Reset	Description
11	BYPASS2	R/W	1	Bypass PLL When set, bypasses the PLL for the clock source.
10:7	reserved	RO	0x0	Software should not rely on the value of a reserved bit. To provide compatibility with future products, the value of a reserved bit should be preserved across a read-modify-write operation.
6:4	OSCSRC2	R/W	0x1	Oscillator Source Selects the input source for the OSC. The values are: Value Description 0x0 MOSC Main oscillator 0x1 IOSC Internal oscillator 0x2 IOSC/4 Internal oscillator / 4 0x3 30 kHz 30-kHz internal oscillator 0x4 Reserved 0x5 Reserved 0x6 Reserved 0x7 32 kHz 32.768-kHz external oscillator
3:0	reserved	RO	0	Software should not rely on the value of a reserved bit. To provide compatibility with future products, the value of a reserved bit should be preserved across a read-modify-write operation.

Register 11: Deep Sleep Clock Configuration (DSLPCLKCFG), offset 0x144

This register provides configuration information for the hardware control of Deep Sleep Mode.

Deep Sleep Clock Configuration (DSLPCLKCFG)

Base 0x400F.E000
Offset 0x144
Type R/W, reset 0x0780.0000

	31	30	29	28	27	26	25	24	23	22	21	20	19	18	17	16
	reserved			DSDIVORIDE						reserved						
Type	RO	RO	RO	R/W	R/W	R/W	R/W	R/W	R/W	RO	RO	RO	RO	RO	RO	RO
Reset	0	0	0	0	0	1	1	1	1	0	0	0	0	0	0	0

	15	14	13	12	11	10	9	8	7	6	5	4	3	2	1	0
	reserved									DSOSCSRC			reserved			
Type	RO	RO	RO	RO	RO	RO	RO	RO	RO	R/W	R/W	R/W	RO	RO	RO	RO
Reset	0	0	0	0	0	0	0	0	0	0	0	0	0	0	0	0

Bit/Field	Name	Type	Reset	Description
31:29	reserved	RO	0x0	Software should not rely on the value of a reserved bit. To provide compatibility with future products, the value of a reserved bit should be preserved across a read-modify-write operation.
28:23	DSDIVORIDE	R/W	0x0F	Divider Field Override 6-bit system divider field to override when Deep-Sleep occurs with PLL running.
22:7	reserved	RO	0x0	Software should not rely on the value of a reserved bit. To provide compatibility with future products, the value of a reserved bit should be preserved across a read-modify-write operation.
6:4	DSOSCSRC	R/W	0x0	Clock Source Specifies the clock source during Deep-Sleep mode. Value Description 0x0 MOSC Use main oscillator as source. 0x1 IOSC Use internal 12-MHz oscillator as source. 0x2 Reserved 0x3 30 kHz Use 30-kHz internal oscillator as source. 0x4 Reserved 0x5 Reserved 0x6 Reserved 0x7 32 kHz Use 32.768-kHz external oscillator as source.
3:0	reserved	RO	0x0	Software should not rely on the value of a reserved bit. To provide compatibility with future products, the value of a reserved bit should be preserved across a read-modify-write operation.

Register 12: Device Identification 1 (DID1), offset 0x004

This register identifies the device family, part number, temperature range, pin count, and package type.

Device Identification 1 (DID1)

Base 0x400F.E000
Offset 0x004
Type RO, reset -

	31	30	29	28	27	26	25	24	23	22	21	20	19	18	17	16
	VER				FAM				PARTNO							
Type	RO	RO	RO	RO	RO	RO	RO	RO	RO	RO	RO	RO	RO	RO	RO	RO
Reset	0	0	0	1	0	0	0	0	1	0	1	0	0	1	1	0

	15	14	13	12	11	10	9	8	7	6	5	4	3	2	1	0
	PINCOUNT			reserved					TEMP			PKG		ROHS	QUAL	
Type	RO	RO	RO	RO	RO	RO	RO	RO	RO	RO	RO	RO	RO	RO	RO	RO
Reset	0	1	0	0	0	0	0	0	-	-	-	-	-	1	-	-

Bit/Field	Name	Type	Reset	Description
31:28	VER	RO	0x1	DID1 Version This field defines the **DID1** register format version. The version number is numeric. The value of the VER field is encoded as follows (all other encodings are reserved): Value Description 0x1 Second version of the **DID1** register format.
27:24	FAM	RO	0x0	Family This field provides the family identification of the device within the Luminary Micro product portfolio. The value is encoded as follows (all other encodings are reserved): Value Description 0x0 Stellaris family of microcontollers, that is, all devices with external part numbers starting with LM3S.
23:16	PARTNO	RO	0xA6	Part Number This field provides the part number of the device within the family. The value is encoded as follows (all other encodings are reserved): Value Description 0xA6 LM3S8962
15:13	PINCOUNT	RO	0x2	Package Pin Count This field specifies the number of pins on the device package. The value is encoded as follows (all other encodings are reserved): Value Description 0x2 100-pin or 108-ball package

Bit/Field	Name	Type	Reset	Description
12:8	reserved	RO	0	Software should not rely on the value of a reserved bit. To provide compatibility with future products, the value of a reserved bit should be preserved across a read-modify-write operation.
7:5	TEMP	RO	-	Temperature Range This field specifies the temperature rating of the device. The value is encoded as follows (all other encodings are reserved): Value Description 0x0 Commercial temperature range (0°C to 70°C) 0x1 Industrial temperature range (-40°C to 85°C) 0x2 Extended temperature range (-40°C to 105°C)
4:3	PKG	RO	-	Package Type This field specifies the package type. The value is encoded as follows (all other encodings are reserved): Value Description 0x0 SOIC package 0x1 LQFP package 0x2 BGA package
2	ROHS	RO	1	RoHS-Compliance This bit specifies whether the device is RoHS-compliant. A 1 indicates the part is RoHS-compliant.
1:0	QUAL	RO	-	Qualification Status This field specifies the qualification status of the device. The value is encoded as follows (all other encodings are reserved): Value Description 0x0 Engineering Sample (unqualified) 0x1 Pilot Production (unqualified) 0x2 Fully Qualified

Register 13: Device Capabilities 0 (DC0), offset 0x008

This register is predefined by the part and can be used to verify features.

Device Capabilities 0 (DC0)

Base 0x400F.E000
Offset 0x008
Type RO, reset 0x00FF.007F

	31	30	29	28	27	26	25	24	23	22	21	20	19	18	17	16
	SRAMSZ															
Type	RO	RO	RO	RO	RO	RO	RO	RO	RO	RO	RO	RO	RO	RO	RO	RO
Reset	0	0	0	0	0	0	0	0	1	1	1	1	1	1	1	1

	15	14	13	12	11	10	9	8	7	6	5	4	3	2	1	0
	FLASHSZ															
Type	RO	RO	RO	RO	RO	RO	RO	RO	RO	RO	RO	RO	RO	RO	RO	RO
Reset	0	0	0	0	0	0	0	0	0	1	1	1	1	1	1	1

Bit/Field	Name	Type	Reset	Description
31:16	SRAMSZ	RO	0x00FF	SRAM Size Indicates the size of the on-chip SRAM memory. Value Description 0x00FF 64 KB of SRAM
15:0	FLASHSZ	RO	0x007F	Flash Size Indicates the size of the on-chip flash memory. Value Description 0x007F 256 KB of Flash

Register 14: Device Capabilities 1 (DC1), offset 0x010

This register provides a list of features available in the system. The Stellaris family uses this register format to indicate the availability of the following family features in the specific device: CANs, PWM, ADC, Watchdog timer, Hibernation module, and debug capabilities. This register also indicates the maximum clock frequency and maximum ADC sample rate. The format of this register is consistent with the **RCGC0**, **SCGC0**, and **DCGC0** clock control registers and the **SRCR0** software reset control register.

Device Capabilities 1 (DC1)

Base 0x400F.E000
Offset 0x010
Type RO, reset 0x0111.32FF

	31	30	29	28	27	26	25	24	23	22	21	20	19	18	17	16
	reserved							CAN0	reserved			PWM	reserved			ADC
Type	RO	RO	RO	RO	RO	RO	RO	RO	RO	RO	RO	RO	RO	RO	RO	RO
Reset	0	0	0	0	0	0	0	1	0	0	0	1	0	0	0	1

	15	14	13	12	11	10	9	8	7	6	5	4	3	2	1	0
	MINSYSDIV				reserved		MAXADCSPD		MPU	HIB	TEMPSNS	PLL	WDT	SWO	SWD	JTAG
Type	RO	RO	RO	RO	RO	RO	RO	RO	RO	RO	RO	RO	RO	RO	RO	RO
Reset	0	0	1	1	0	0	1	0	1	1	1	1	1	1	1	1

Bit/Field	Name	Type	Reset	Description
31:25	reserved	RO	0	Software should not rely on the value of a reserved bit. To provide compatibility with future products, the value of a reserved bit should be preserved across a read-modify-write operation.
24	CAN0	RO	1	CAN Module 0 Present When set, indicates that CAN unit 0 is present.
23:21	reserved	RO	0	Software should not rely on the value of a reserved bit. To provide compatibility with future products, the value of a reserved bit should be preserved across a read-modify-write operation.
20	PWM	RO	1	PWM Module Present When set, indicates that the PWM module is present.
19:17	reserved	RO	0	Software should not rely on the value of a reserved bit. To provide compatibility with future products, the value of a reserved bit should be preserved across a read-modify-write operation.
16	ADC	RO	1	ADC Module Present When set, indicates that the ADC module is present.
15:12	MINSYSDIV	RO	0x3	System Clock Divider Minimum 4-bit divider value for system clock. The reset value is hardware-dependent. See the **RCC** register for how to change the system clock divisor using the `SYSDIV` bit. Value Description 0x3 Specifies a 50-MHz CPU clock with a PLL divider of 4.

Bit/Field	Name	Type	Reset	Description
11:10	reserved	RO	0	Software should not rely on the value of a reserved bit. To provide compatibility with future products, the value of a reserved bit should be preserved across a read-modify-write operation.
9:8	MAXADCSPD	RO	0x2	Max ADC Speed Indicates the maximum rate at which the ADC samples data. Value Description 0x2 500K samples/second
7	MPU	RO	1	MPU Present When set, indicates that the Cortex-M3 Memory Protection Unit (MPU) module is present. See the ARM Cortex-M3 Technical Reference Manual for details on the MPU.
6	HIB	RO	1	Hibernation Module Present When set, indicates that the Hibernation module is present.
5	TEMPSNS	RO	1	Temp Sensor Present When set, indicates that the on-chip temperature sensor is present.
4	PLL	RO	1	PLL Present When set, indicates that the on-chip Phase Locked Loop (PLL) is present.
3	WDT	RO	1	Watchdog Timer Present When set, indicates that a watchdog timer is present.
2	SWO	RO	1	SWO Trace Port Present When set, indicates that the Serial Wire Output (SWO) trace port is present.
1	SWD	RO	1	SWD Present When set, indicates that the Serial Wire Debugger (SWD) is present.
0	JTAG	RO	1	JTAG Present When set, indicates that the JTAG debugger interface is present.

Register 15: Device Capabilities 2 (DC2), offset 0x014

This register provides a list of features available in the system. The Stellaris family uses this register format to indicate the availability of the following family features in the specific device: Analog Comparators, General-Purpose Timers, I2Cs, QEIs, SSIs, and UARTs. The format of this register is consistent with the **RCGC1**, **SCGC1**, and **DCGC1** clock control registers and the **SRCR1** software reset control register.

Device Capabilities 2 (DC2)

Base 0x400F.E000
Offset 0x014
Type RO, reset 0x010F.1313

	31	30	29	28	27	26	25	24	23	22	21	20	19	18	17	16
	reserved							COMP0	reserved				TIMER3	TIMER2	TIMER1	TIMER0
Type	RO	RO	RO	RO	RO	RO	RO	RO	RO	RO	RO	RO	RO	RO	RO	RO
Reset	0	0	0	0	0	0	0	1	0	0	0	0	1	1	1	1

	15	14	13	12	11	10	9	8	7	6	5	4	3	2	1	0
	reserved			I2C0	reserved		QEI1	QEI0	reserved			SSI0	reserved		UART1	UART0
Type	RO	RO	RO	RO	RO	RO	RO	RO	RO	RO	RO	RO	RO	RO	RO	RO
Reset	0	0	0	1	0	0	1	1	0	0	0	1	0	0	1	1

Bit/Field	Name	Type	Reset	Description
31:25	reserved	RO	0	Software should not rely on the value of a reserved bit. To provide compatibility with future products, the value of a reserved bit should be preserved across a read-modify-write operation.
24	COMP0	RO	1	Analog Comparator 0 Present When set, indicates that analog comparator 0 is present.
23:20	reserved	RO	0	Software should not rely on the value of a reserved bit. To provide compatibility with future products, the value of a reserved bit should be preserved across a read-modify-write operation.
19	TIMER3	RO	1	Timer 3 Present When set, indicates that General-Purpose Timer module 3 is present.
18	TIMER2	RO	1	Timer 2 Present When set, indicates that General-Purpose Timer module 2 is present.
17	TIMER1	RO	1	Timer 1 Present When set, indicates that General-Purpose Timer module 1 is present.
16	TIMER0	RO	1	Timer 0 Present When set, indicates that General-Purpose Timer module 0 is present.
15:13	reserved	RO	0	Software should not rely on the value of a reserved bit. To provide compatibility with future products, the value of a reserved bit should be preserved across a read-modify-write operation.
12	I2C0	RO	1	I2C Module 0 Present When set, indicates that I2C module 0 is present.

Bit/Field	Name	Type	Reset	Description
11:10	reserved	RO	0	Software should not rely on the value of a reserved bit. To provide compatibility with future products, the value of a reserved bit should be preserved across a read-modify-write operation.
9	QEI1	RO	1	QEI1 Present When set, indicates that QEI module 1 is present.
8	QEI0	RO	1	QEI0 Present When set, indicates that QEI module 0 is present.
7:5	reserved	RO	0	Software should not rely on the value of a reserved bit. To provide compatibility with future products, the value of a reserved bit should be preserved across a read-modify-write operation.
4	SSI0	RO	1	SSI0 Present When set, indicates that SSI module 0 is present.
3:2	reserved	RO	0	Software should not rely on the value of a reserved bit. To provide compatibility with future products, the value of a reserved bit should be preserved across a read-modify-write operation.
1	UART1	RO	1	UART1 Present When set, indicates that UART module 1 is present.
0	UART0	RO	1	UART0 Present When set, indicates that UART module 0 is present.

Register 16: Device Capabilities 3 (DC3), offset 0x018

This register provides a list of features available in the system. The Stellaris family uses this register format to indicate the availability of the following family features in the specific device: Analog Comparator I/Os, CCP I/Os, ADC I/Os, and PWM I/Os.

Device Capabilities 3 (DC3)

Base 0x400F.E000
Offset 0x018
Type RO, reset 0x830F.81FF

	31	30	29	28	27	26	25	24	23	22	21	20	19	18	17	16
	32KHZ	reserved					CCP1	CCP0	reserved				ADC3	ADC2	ADC1	ADC0
Type	RO	RO	RO	RO	RO	RO	RO	RO	RO	RO	RO	RO	RO	RO	RO	RO
Reset	1	0	0	0	0	0	1	1	0	0	0	0	1	1	1	1

	15	14	13	12	11	10	9	8	7	6	5	4	3	2	1	0
	PWMFAULT	reserved						C0O	C0PLUS	C0MINUS	PWM5	PWM4	PWM3	PWM2	PWM1	PWM0
Type	RO	RO	RO	RO	RO	RO	RO	RO	RO	RO	RO	RO	RO	RO	RO	RO
Reset	1	0	0	0	0	0	0	1	1	1	1	1	1	1	1	1

Bit/Field	Name	Type	Reset	Description
31	32KHZ	RO	1	32KHz Input Clock Available When set, indicates an even CCP pin is present and can be used as a 32-KHz input clock.
30:26	reserved	RO	0	Software should not rely on the value of a reserved bit. To provide compatibility with future products, the value of a reserved bit should be preserved across a read-modify-write operation.
25	CCP1	RO	1	CCP1 Pin Present When set, indicates that Capture/Compare/PWM pin 1 is present.
24	CCP0	RO	1	CCP0 Pin Present When set, indicates that Capture/Compare/PWM pin 0 is present.
23:20	reserved	RO	0	Software should not rely on the value of a reserved bit. To provide compatibility with future products, the value of a reserved bit should be preserved across a read-modify-write operation.
19	ADC3	RO	1	ADC3 Pin Present When set, indicates that ADC pin 3 is present.
18	ADC2	RO	1	ADC2 Pin Present When set, indicates that ADC pin 2 is present.
17	ADC1	RO	1	ADC1 Pin Present When set, indicates that ADC pin 1 is present.
16	ADC0	RO	1	ADC0 Pin Present When set, indicates that ADC pin 0 is present.
15	PWMFAULT	RO	1	PWM Fault Pin Present When set, indicates that the PWM Fault pin is present.

Bit/Field	Name	Type	Reset	Description
14:9	reserved	RO	0	Software should not rely on the value of a reserved bit. To provide compatibility with future products, the value of a reserved bit should be preserved across a read-modify-write operation.
8	C0O	RO	1	C0o Pin Present When set, indicates that the analog comparator 0 output pin is present.
7	C0PLUS	RO	1	C0+ Pin Present When set, indicates that the analog comparator 0 (+) input pin is present.
6	C0MINUS	RO	1	C0- Pin Present When set, indicates that the analog comparator 0 (-) input pin is present.
5	PWM5	RO	1	PWM5 Pin Present When set, indicates that the PWM pin 5 is present.
4	PWM4	RO	1	PWM4 Pin Present When set, indicates that the PWM pin 4 is present.
3	PWM3	RO	1	PWM3 Pin Present When set, indicates that the PWM pin 3 is present.
2	PWM2	RO	1	PWM2 Pin Present When set, indicates that the PWM pin 2 is present.
1	PWM1	RO	1	PWM1 Pin Present When set, indicates that the PWM pin 1 is present.
0	PWM0	RO	1	PWM0 Pin Present When set, indicates that the PWM pin 0 is present.

Register 17: Device Capabilities 4 (DC4), offset 0x01C

This register provides a list of features available in the system. The Stellaris family uses this register format to indicate the availability of the following family features in the specific device: Ethernet MAC and PHY, GPIOs, and CCP I/Os. The format of this register is consistent with the **RCGC2**, **SCGC2**, and **DCGC2** clock control registers and the **SRCR2** software reset control register.

Device Capabilities 4 (DC4)

Base 0x400F.E000
Offset 0x01C
Type RO, reset 0x5100.007F

	31	30	29	28	27	26	25	24	23	22	21	20	19	18	17	16
	reserved	EPHY0	reserved	EMAC0	reserved			E1588	reserved							
Type	RO	RO	RO	RO	RO	RO	RO	RO	RO	RO	RO	RO	RO	RO	RO	RO
Reset	0	1	0	1	0	0	0	1	0	0	0	0	0	0	0	0

	15	14	13	12	11	10	9	8	7	6	5	4	3	2	1	0
	reserved									GPIOG	GPIOF	GPIOE	GPIOD	GPIOC	GPIOB	GPIOA
Type	RO	RO	RO	RO	RO	RO	RO	RO	RO	RO	RO	RO	RO	RO	RO	RO
Reset	0	0	0	0	0	0	0	0	0	1	1	1	1	1	1	1

Bit/Field	Name	Type	Reset	Description
31	reserved	RO	0	Software should not rely on the value of a reserved bit. To provide compatibility with future products, the value of a reserved bit should be preserved across a read-modify-write operation.
30	EPHY0	RO	1	Ethernet PHY0 Present When set, indicates that Ethernet PHY module 0 is present.
29	reserved	RO	0	Software should not rely on the value of a reserved bit. To provide compatibility with future products, the value of a reserved bit should be preserved across a read-modify-write operation.
28	EMAC0	RO	1	Ethernet MAC0 Present When set, indicates that Ethernet MAC module 0 is present.
27:25	reserved	RO	0	Software should not rely on the value of a reserved bit. To provide compatibility with future products, the value of a reserved bit should be preserved across a read-modify-write operation.
24	E1588	RO	1	1588 Capable When set, indicates that that EMAC0 is 1588-capable.
23:7	reserved	RO	0	Software should not rely on the value of a reserved bit. To provide compatibility with future products, the value of a reserved bit should be preserved across a read-modify-write operation.
6	GPIOG	RO	1	GPIO Port G Present When set, indicates that GPIO Port G is present.
5	GPIOF	RO	1	GPIO Port F Present When set, indicates that GPIO Port F is present.
4	GPIOE	RO	1	GPIO Port E Present When set, indicates that GPIO Port E is present.

Bit/Field	Name	Type	Reset	Description
3	GPIOD	RO	1	GPIO Port D Present When set, indicates that GPIO Port D is present.
2	GPIOC	RO	1	GPIO Port C Present When set, indicates that GPIO Port C is present.
1	GPIOB	RO	1	GPIO Port B Present When set, indicates that GPIO Port B is present.
0	GPIOA	RO	1	GPIO Port A Present When set, indicates that GPIO Port A is present.

Register 18: Run Mode Clock Gating Control Register 0 (RCGC0), offset 0x100

This register controls the clock gating logic. Each bit controls a clock enable for a given interface, function, or unit. If set, the unit receives a clock and functions. Otherwise, the unit is unclocked and disabled (saving power). If the unit is unclocked, reads or writes to the unit will generate a bus fault. The reset state of these bits is 0 (unclocked) unless otherwise noted, so that all functional units are disabled. It is the responsibility of software to enable the ports necessary for the application. Note that these registers may contain more bits than there are interfaces, functions, or units to control. This is to assure reasonable code compatibility with other family and future parts. **RCGC0** is the clock configuration register for running operation, **SCGC0** for Sleep operation, and **DCGC0** for Deep-Sleep operation. Setting the ACG bit in the **Run-Mode Clock Configuration (RCC)** register specifies that the system uses sleep modes.

Run Mode Clock Gating Control Register 0 (RCGC0)

Base 0x400F.E000
Offset 0x100
Type R/W, reset 0x00000040

	31	30	29	28	27	26	25	24	23	22	21	20	19	18	17	16
	reserved							CAN0	reserved			PWM	reserved			ADC
Type	RO	RO	RO	RO	RO	RO	RO	R/W	RO	RO	RO	R/W	RO	RO	RO	R/W
Reset	0	0	0	0	0	0	0	0	0	0	0	0	0	0	0	0

	15	14	13	12	11	10	9	8	7	6	5	4	3	2	1	0
	reserved						MAXADCSPD		reserved	HIB	reserved		WDT	reserved		
Type	RO	RO	RO	RO	RO	RO	R/W	R/W	RO	R/W	RO	RO	R/W	RO	RO	RO
Reset	0	0	0	0	0	0	0	0	0	1	0	0	0	0	0	0

Bit/Field	Name	Type	Reset	Description
31:25	reserved	RO	0	Software should not rely on the value of a reserved bit. To provide compatibility with future products, the value of a reserved bit should be preserved across a read-modify-write operation.
24	CAN0	R/W	0	CAN0 Clock Gating Control This bit controls the clock gating for CAN unit 0. If set, the unit receives a clock and functions. Otherwise, the unit is unclocked and disabled.
23:21	reserved	RO	0	Software should not rely on the value of a reserved bit. To provide compatibility with future products, the value of a reserved bit should be preserved across a read-modify-write operation.
20	PWM	R/W	0	PWM Clock Gating Control This bit controls the clock gating for the PWM module. If set, the unit receives a clock and functions. Otherwise, the unit is unclocked and disabled. If the unit is unclocked, a read or write to the unit generates a bus fault.
19:17	reserved	RO	0	Software should not rely on the value of a reserved bit. To provide compatibility with future products, the value of a reserved bit should be preserved across a read-modify-write operation.
16	ADC	R/W	0	ADC0 Clock Gating Control This bit controls the clock gating for SAR ADC module 0. If set, the unit receives a clock and functions. Otherwise, the unit is unclocked and disabled. If the unit is unclocked, a read or write to the unit generates a bus fault.

Bit/Field	Name	Type	Reset	Description
15:10	reserved	RO	0	Software should not rely on the value of a reserved bit. To provide compatibility with future products, the value of a reserved bit should be preserved across a read-modify-write operation.
9:8	MAXADCSPD	R/W	0	ADC Sample Speed This field sets the rate at which the ADC samples data. You cannot set the rate higher than the maximum rate. You can set the sample rate by setting the `MAXADCSPD` bit as follows: Value Description 0x2 500K samples/second 0x1 250K samples/second 0x0 125K samples/second
7	reserved	RO	0	Software should not rely on the value of a reserved bit. To provide compatibility with future products, the value of a reserved bit should be preserved across a read-modify-write operation.
6	HIB	R/W	1	HIB Clock Gating Control This bit controls the clock gating for the Hibernation module. If set, the unit receives a clock and functions. Otherwise, the unit is unclocked and disabled.
5:4	reserved	RO	0	Software should not rely on the value of a reserved bit. To provide compatibility with future products, the value of a reserved bit should be preserved across a read-modify-write operation.
3	WDT	R/W	0	WDT Clock Gating Control This bit controls the clock gating for the WDT module. If set, the unit receives a clock and functions. Otherwise, the unit is unclocked and disabled. If the unit is unclocked, a read or write to the unit generates a bus fault.
2:0	reserved	RO	0	Software should not rely on the value of a reserved bit. To provide compatibility with future products, the value of a reserved bit should be preserved across a read-modify-write operation.

Register 19: Sleep Mode Clock Gating Control Register 0 (SCGC0), offset 0x110

This register controls the clock gating logic. Each bit controls a clock enable for a given interface, function, or unit. If set, the unit receives a clock and functions. Otherwise, the unit is unclocked and disabled (saving power). If the unit is unclocked, reads or writes to the unit will generate a bus fault. The reset state of these bits is 0 (unclocked) unless otherwise noted, so that all functional units are disabled. It is the responsibility of software to enable the ports necessary for the application. Note that these registers may contain more bits than there are interfaces, functions, or units to control. This is to assure reasonable code compatibility with other family and future parts. **RCGC0** is the clock configuration register for running operation, **SCGC0** for Sleep operation, and **DCGC0** for Deep-Sleep operation. Setting the ACG bit in the **Run-Mode Clock Configuration (RCC)** register specifies that the system uses sleep modes.

Sleep Mode Clock Gating Control Register 0 (SCGC0)

Base 0x400F.E000
Offset 0x110
Type R/W, reset 0x00000040

	31	30	29	28	27	26	25	24	23	22	21	20	19	18	17	16
	reserved							CAN0	reserved			PWM	reserved			ADC
Type	RO	RO	RO	RO	RO	RO	RO	R/W	RO	RO	RO	R/W	RO	RO	RO	R/W
Reset	0	0	0	0	0	0	0	0	0	0	0	0	0	0	0	0

	15	14	13	12	11	10	9	8	7	6	5	4	3	2	1	0
	reserved						MAXADCSPD		reserved	HIB	reserved		WDT	reserved		
Type	RO	RO	RO	RO	RO	RO	R/W	R/W	RO	R/W	RO	RO	R/W	RO	RO	RO
Reset	0	0	0	0	0	0	0	0	0	1	0	0	0	0	0	0

Bit/Field	Name	Type	Reset	Description
31:25	reserved	RO	0	Software should not rely on the value of a reserved bit. To provide compatibility with future products, the value of a reserved bit should be preserved across a read-modify-write operation.
24	CAN0	R/W	0	CAN0 Clock Gating Control This bit controls the clock gating for CAN unit 0. If set, the unit receives a clock and functions. Otherwise, the unit is unclocked and disabled.
23:21	reserved	RO	0	Software should not rely on the value of a reserved bit. To provide compatibility with future products, the value of a reserved bit should be preserved across a read-modify-write operation.
20	PWM	R/W	0	PWM Clock Gating Control This bit controls the clock gating for the PWM module. If set, the unit receives a clock and functions. Otherwise, the unit is unclocked and disabled. If the unit is unclocked, a read or write to the unit generates a bus fault.
19:17	reserved	RO	0	Software should not rely on the value of a reserved bit. To provide compatibility with future products, the value of a reserved bit should be preserved across a read-modify-write operation.
16	ADC	R/W	0	ADC0 Clock Gating Control This bit controls the clock gating for SAR ADC module 0. If set, the unit receives a clock and functions. Otherwise, the unit is unclocked and disabled. If the unit is unclocked, a read or write to the unit generates a bus fault.

Bit/Field	Name	Type	Reset	Description
15:10	reserved	RO	0	Software should not rely on the value of a reserved bit. To provide compatibility with future products, the value of a reserved bit should be preserved across a read-modify-write operation.
9:8	MAXADCSPD	R/W	0	ADC Sample Speed This field sets the rate at which the ADC samples data. You cannot set the rate higher than the maximum rate. You can set the sample rate by setting the `MAXADCSPD` bit as follows: Value Description 0x2 500K samples/second 0x1 250K samples/second 0x0 125K samples/second
7	reserved	RO	0	Software should not rely on the value of a reserved bit. To provide compatibility with future products, the value of a reserved bit should be preserved across a read-modify-write operation.
6	HIB	R/W	1	HIB Clock Gating Control This bit controls the clock gating for the Hibernation module. If set, the unit receives a clock and functions. Otherwise, the unit is unclocked and disabled.
5:4	reserved	RO	0	Software should not rely on the value of a reserved bit. To provide compatibility with future products, the value of a reserved bit should be preserved across a read-modify-write operation.
3	WDT	R/W	0	WDT Clock Gating Control This bit controls the clock gating for the WDT module. If set, the unit receives a clock and functions. Otherwise, the unit is unclocked and disabled. If the unit is unclocked, a read or write to the unit generates a bus fault.
2:0	reserved	RO	0	Software should not rely on the value of a reserved bit. To provide compatibility with future products, the value of a reserved bit should be preserved across a read-modify-write operation.

Register 20: Deep Sleep Mode Clock Gating Control Register 0 (DCGC0), offset 0x120

This register controls the clock gating logic. Each bit controls a clock enable for a given interface, function, or unit. If set, the unit receives a clock and functions. Otherwise, the unit is unclocked and disabled (saving power). If the unit is unclocked, reads or writes to the unit will generate a bus fault. The reset state of these bits is 0 (unclocked) unless otherwise noted, so that all functional units are disabled. It is the responsibility of software to enable the ports necessary for the application. Note that these registers may contain more bits than there are interfaces, functions, or units to control. This is to assure reasonable code compatibility with other family and future parts. **RCGC0** is the clock configuration register for running operation, **SCGC0** for Sleep operation, and **DCGC0** for Deep-Sleep operation. Setting the ACG bit in the **Run-Mode Clock Configuration (RCC)** register specifies that the system uses sleep modes.

Deep Sleep Mode Clock Gating Control Register 0 (DCGC0)

Base 0x400F.E000
Offset 0x120
Type R/W, reset 0x00000040

	31	30	29	28	27	26	25	24	23	22	21	20	19	18	17	16
	reserved							CAN0	reserved			PWM	reserved			ADC
Type	RO	RO	RO	RO	RO	RO	RO	R/W	RO	RO	RO	R/W	RO	RO	RO	R/W
Reset	0	0	0	0	0	0	0	0	0	0	0	0	0	0	0	0

	15	14	13	12	11	10	9	8	7	6	5	4	3	2	1	0
	reserved						MAXADCSPD		reserved	HIB	reserved		WDT	reserved		
Type	RO	RO	RO	RO	RO	RO	R/W	R/W	RO	R/W	RO	RO	R/W	RO	RO	RO
Reset	0	0	0	0	0	0	0	0	0	1	0	0	0	0	0	0

Bit/Field	Name	Type	Reset	Description
31:25	reserved	RO	0	Software should not rely on the value of a reserved bit. To provide compatibility with future products, the value of a reserved bit should be preserved across a read-modify-write operation.
24	CAN0	R/W	0	CAN0 Clock Gating Control This bit controls the clock gating for CAN unit 0. If set, the unit receives a clock and functions. Otherwise, the unit is unclocked and disabled.
23:21	reserved	RO	0	Software should not rely on the value of a reserved bit. To provide compatibility with future products, the value of a reserved bit should be preserved across a read-modify-write operation.
20	PWM	R/W	0	PWM Clock Gating Control This bit controls the clock gating for the PWM module. If set, the unit receives a clock and functions. Otherwise, the unit is unclocked and disabled. If the unit is unclocked, a read or write to the unit generates a bus fault.
19:17	reserved	RO	0	Software should not rely on the value of a reserved bit. To provide compatibility with future products, the value of a reserved bit should be preserved across a read-modify-write operation.
16	ADC	R/W	0	ADC0 Clock Gating Control This bit controls the clock gating for SAR ADC module 0. If set, the unit receives a clock and functions. Otherwise, the unit is unclocked and disabled. If the unit is unclocked, a read or write to the unit generates a bus fault.

Bit/Field	Name	Type	Reset	Description
15:10	reserved	RO	0	Software should not rely on the value of a reserved bit. To provide compatibility with future products, the value of a reserved bit should be preserved across a read-modify-write operation.
9:8	MAXADCSPD	R/W	0	ADC Sample Speed This field sets the rate at which the ADC samples data. You cannot set the rate higher than the maximum rate. You can set the sample rate by setting the `MAXADCSPD` bit as follows: Value Description 0x2 500K samples/second 0x1 250K samples/second 0x0 125K samples/second
7	reserved	RO	0	Software should not rely on the value of a reserved bit. To provide compatibility with future products, the value of a reserved bit should be preserved across a read-modify-write operation.
6	HIB	R/W	1	HIB Clock Gating Control This bit controls the clock gating for the Hibernation module. If set, the unit receives a clock and functions. Otherwise, the unit is unclocked and disabled.
5:4	reserved	RO	0	Software should not rely on the value of a reserved bit. To provide compatibility with future products, the value of a reserved bit should be preserved across a read-modify-write operation.
3	WDT	R/W	0	WDT Clock Gating Control This bit controls the clock gating for the WDT module. If set, the unit receives a clock and functions. Otherwise, the unit is unclocked and disabled. If the unit is unclocked, a read or write to the unit generates a bus fault.
2:0	reserved	RO	0	Software should not rely on the value of a reserved bit. To provide compatibility with future products, the value of a reserved bit should be preserved across a read-modify-write operation.

Register 21: Run Mode Clock Gating Control Register 1 (RCGC1), offset 0x104

This register controls the clock gating logic. Each bit controls a clock enable for a given interface, function, or unit. If set, the unit receives a clock and functions. Otherwise, the unit is unclocked and disabled (saving power). If the unit is unclocked, reads or writes to the unit will generate a bus fault. The reset state of these bits is 0 (unclocked) unless otherwise noted, so that all functional units are disabled. It is the responsibility of software to enable the ports necessary for the application. Note that these registers may contain more bits than there are interfaces, functions, or units to control. This is to assure reasonable code compatibility with other family and future parts. **RCGC1** is the clock configuration register for running operation, **SCGC1** for Sleep operation, and **DCGC1** for Deep-Sleep operation. Setting the ACG bit in the **Run-Mode Clock Configuration (RCC)** register specifies that the system uses sleep modes.

Run Mode Clock Gating Control Register 1 (RCGC1)

Base 0x400F.E000
Offset 0x104
Type R/W, reset 0x00000000

	31	30	29	28	27	26	25	24	23	22	21	20	19	18	17	16
	reserved							COMP0	reserved				TIMER3	TIMER2	TIMER1	TIMER0
Type	RO	RO	RO	RO	RO	RO	RO	R/W	RO	RO	RO	RO	R/W	R/W	R/W	R/W
Reset	0	0	0	0	0	0	0	0	0	0	0	0	0	0	0	0

	15	14	13	12	11	10	9	8	7	6	5	4	3	2	1	0
	reserved			I2C0	reserved		QEI1	QEI0	reserved			SSI0	reserved		UART1	UART0
Type	RO	RO	RO	R/W	RO	RO	R/W	R/W	RO	RO	RO	R/W	RO	RO	R/W	R/W
Reset	0	0	0	0	0	0	0	0	0	0	0	0	0	0	0	0

Bit/Field	Name	Type	Reset	Description
31:25	reserved	RO	0	Software should not rely on the value of a reserved bit. To provide compatibility with future products, the value of a reserved bit should be preserved across a read-modify-write operation.
24	COMP0	R/W	0	Analog Comparator 0 Clock Gating This bit controls the clock gating for analog comparator 0. If set, the unit receives a clock and functions. Otherwise, the unit is unclocked and disabled. If the unit is unclocked, reads or writes to the unit will generate a bus fault.
23:20	reserved	RO	0	Software should not rely on the value of a reserved bit. To provide compatibility with future products, the value of a reserved bit should be preserved across a read-modify-write operation.
19	TIMER3	R/W	0	Timer 3 Clock Gating Control This bit controls the clock gating for General-Purpose Timer module 3. If set, the unit receives a clock and functions. Otherwise, the unit is unclocked and disabled. If the unit is unclocked, reads or writes to the unit will generate a bus fault.
18	TIMER2	R/W	0	Timer 2 Clock Gating Control This bit controls the clock gating for General-Purpose Timer module 2. If set, the unit receives a clock and functions. Otherwise, the unit is unclocked and disabled. If the unit is unclocked, reads or writes to the unit will generate a bus fault.

Bit/Field	Name	Type	Reset	Description
17	TIMER1	R/W	0	Timer 1 Clock Gating Control This bit controls the clock gating for General-Purpose Timer module 1. If set, the unit receives a clock and functions. Otherwise, the unit is unclocked and disabled. If the unit is unclocked, reads or writes to the unit will generate a bus fault.
16	TIMER0	R/W	0	Timer 0 Clock Gating Control This bit controls the clock gating for General-Purpose Timer module 0. If set, the unit receives a clock and functions. Otherwise, the unit is unclocked and disabled. If the unit is unclocked, reads or writes to the unit will generate a bus fault.
15:13	reserved	RO	0	Software should not rely on the value of a reserved bit. To provide compatibility with future products, the value of a reserved bit should be preserved across a read-modify-write operation.
12	I2C0	R/W	0	I2C0 Clock Gating Control This bit controls the clock gating for I2C module 0. If set, the unit receives a clock and functions. Otherwise, the unit is unclocked and disabled. If the unit is unclocked, reads or writes to the unit will generate a bus fault.
11:10	reserved	RO	0	Software should not rely on the value of a reserved bit. To provide compatibility with future products, the value of a reserved bit should be preserved across a read-modify-write operation.
9	QEI1	R/W	0	QEI1 Clock Gating Control This bit controls the clock gating for QEI module 1. If set, the unit receives a clock and functions. Otherwise, the unit is unclocked and disabled. If the unit is unclocked, reads or writes to the unit will generate a bus fault.
8	QEI0	R/W	0	QEI0 Clock Gating Control This bit controls the clock gating for QEI module 0. If set, the unit receives a clock and functions. Otherwise, the unit is unclocked and disabled. If the unit is unclocked, reads or writes to the unit will generate a bus fault.
7:5	reserved	RO	0	Software should not rely on the value of a reserved bit. To provide compatibility with future products, the value of a reserved bit should be preserved across a read-modify-write operation.
4	SSI0	R/W	0	SSI0 Clock Gating Control This bit controls the clock gating for SSI module 0. If set, the unit receives a clock and functions. Otherwise, the unit is unclocked and disabled. If the unit is unclocked, reads or writes to the unit will generate a bus fault.
3:2	reserved	RO	0	Software should not rely on the value of a reserved bit. To provide compatibility with future products, the value of a reserved bit should be preserved across a read-modify-write operation.
1	UART1	R/W	0	UART1 Clock Gating Control This bit controls the clock gating for UART module 1. If set, the unit receives a clock and functions. Otherwise, the unit is unclocked and disabled. If the unit is unclocked, reads or writes to the unit will generate a bus fault.

Bit/Field	Name	Type	Reset	Description
0	UART0	R/W	0	UART0 Clock Gating Control This bit controls the clock gating for UART module 0. If set, the unit receives a clock and functions. Otherwise, the unit is unclocked and disabled. If the unit is unclocked, reads or writes to the unit will generate a bus fault.

Register 22: Sleep Mode Clock Gating Control Register 1 (SCGC1), offset 0x114

This register controls the clock gating logic. Each bit controls a clock enable for a given interface, function, or unit. If set, the unit receives a clock and functions. Otherwise, the unit is unclocked and disabled (saving power). If the unit is unclocked, reads or writes to the unit will generate a bus fault. The reset state of these bits is 0 (unclocked) unless otherwise noted, so that all functional units are disabled. It is the responsibility of software to enable the ports necessary for the application. Note that these registers may contain more bits than there are interfaces, functions, or units to control. This is to assure reasonable code compatibility with other family and future parts. **RCGC1** is the clock configuration register for running operation, **SCGC1** for Sleep operation, and **DCGC1** for Deep-Sleep operation. Setting the ACG bit in the **Run-Mode Clock Configuration (RCC)** register specifies that the system uses sleep modes.

Sleep Mode Clock Gating Control Register 1 (SCGC1)

Base 0x400F.E000
Offset 0x114
Type R/W, reset 0x00000000

	31	30	29	28	27	26	25	24	23	22	21	20	19	18	17	16
	reserved							COMP0	reserved				TIMER3	TIMER2	TIMER1	TIMER0
Type	RO	RO	RO	RO	RO	RO	RO	R/W	RO	RO	RO	RO	R/W	R/W	R/W	R/W
Reset	0	0	0	0	0	0	0	0	0	0	0	0	0	0	0	0

	15	14	13	12	11	10	9	8	7	6	5	4	3	2	1	0
	reserved			I2C0	reserved		QEI1	QEI0	reserved			SSI0	reserved		UART1	UART0
Type	RO	RO	RO	R/W	RO	RO	R/W	R/W	RO	RO	RO	R/W	RO	RO	R/W	R/W
Reset	0	0	0	0	0	0	0	0	0	0	0	0	0	0	0	0

Bit/Field	Name	Type	Reset	Description
31:25	reserved	RO	0	Software should not rely on the value of a reserved bit. To provide compatibility with future products, the value of a reserved bit should be preserved across a read-modify-write operation.
24	COMP0	R/W	0	Analog Comparator 0 Clock Gating This bit controls the clock gating for analog comparator 0. If set, the unit receives a clock and functions. Otherwise, the unit is unclocked and disabled. If the unit is unclocked, reads or writes to the unit will generate a bus fault.
23:20	reserved	RO	0	Software should not rely on the value of a reserved bit. To provide compatibility with future products, the value of a reserved bit should be preserved across a read-modify-write operation.
19	TIMER3	R/W	0	Timer 3 Clock Gating Control This bit controls the clock gating for General-Purpose Timer module 3. If set, the unit receives a clock and functions. Otherwise, the unit is unclocked and disabled. If the unit is unclocked, reads or writes to the unit will generate a bus fault.
18	TIMER2	R/W	0	Timer 2 Clock Gating Control This bit controls the clock gating for General-Purpose Timer module 2. If set, the unit receives a clock and functions. Otherwise, the unit is unclocked and disabled. If the unit is unclocked, reads or writes to the unit will generate a bus fault.

Bit/Field	Name	Type	Reset	Description
17	TIMER1	R/W	0	Timer 1 Clock Gating Control This bit controls the clock gating for General-Purpose Timer module 1. If set, the unit receives a clock and functions. Otherwise, the unit is unclocked and disabled. If the unit is unclocked, reads or writes to the unit will generate a bus fault.
16	TIMER0	R/W	0	Timer 0 Clock Gating Control This bit controls the clock gating for General-Purpose Timer module 0. If set, the unit receives a clock and functions. Otherwise, the unit is unclocked and disabled. If the unit is unclocked, reads or writes to the unit will generate a bus fault.
15:13	reserved	RO	0	Software should not rely on the value of a reserved bit. To provide compatibility with future products, the value of a reserved bit should be preserved across a read-modify-write operation.
12	I2C0	R/W	0	I2C0 Clock Gating Control This bit controls the clock gating for I2C module 0. If set, the unit receives a clock and functions. Otherwise, the unit is unclocked and disabled. If the unit is unclocked, reads or writes to the unit will generate a bus fault.
11:10	reserved	RO	0	Software should not rely on the value of a reserved bit. To provide compatibility with future products, the value of a reserved bit should be preserved across a read-modify-write operation.
9	QEI1	R/W	0	QEI1 Clock Gating Control This bit controls the clock gating for QEI module 1. If set, the unit receives a clock and functions. Otherwise, the unit is unclocked and disabled. If the unit is unclocked, reads or writes to the unit will generate a bus fault.
8	QEI0	R/W	0	QEI0 Clock Gating Control This bit controls the clock gating for QEI module 0. If set, the unit receives a clock and functions. Otherwise, the unit is unclocked and disabled. If the unit is unclocked, reads or writes to the unit will generate a bus fault.
7:5	reserved	RO	0	Software should not rely on the value of a reserved bit. To provide compatibility with future products, the value of a reserved bit should be preserved across a read-modify-write operation.
4	SSI0	R/W	0	SSI0 Clock Gating Control This bit controls the clock gating for SSI module 0. If set, the unit receives a clock and functions. Otherwise, the unit is unclocked and disabled. If the unit is unclocked, reads or writes to the unit will generate a bus fault.
3:2	reserved	RO	0	Software should not rely on the value of a reserved bit. To provide compatibility with future products, the value of a reserved bit should be preserved across a read-modify-write operation.
1	UART1	R/W	0	UART1 Clock Gating Control This bit controls the clock gating for UART module 1. If set, the unit receives a clock and functions. Otherwise, the unit is unclocked and disabled. If the unit is unclocked, reads or writes to the unit will generate a bus fault.

Bit/Field	Name	Type	Reset	Description
0	UART0	R/W	0	UART0 Clock Gating Control This bit controls the clock gating for UART module 0. If set, the unit receives a clock and functions. Otherwise, the unit is unclocked and disabled. If the unit is unclocked, reads or writes to the unit will generate a bus fault.

Register 23: Deep Sleep Mode Clock Gating Control Register 1 (DCGC1), offset 0x124

This register controls the clock gating logic. Each bit controls a clock enable for a given interface, function, or unit. If set, the unit receives a clock and functions. Otherwise, the unit is unclocked and disabled (saving power). If the unit is unclocked, reads or writes to the unit will generate a bus fault. The reset state of these bits is 0 (unclocked) unless otherwise noted, so that all functional units are disabled. It is the responsibility of software to enable the ports necessary for the application. Note that these registers may contain more bits than there are interfaces, functions, or units to control. This is to assure reasonable code compatibility with other family and future parts. **RCGC1** is the clock configuration register for running operation, **SCGC1** for Sleep operation, and **DCGC1** for Deep-Sleep operation. Setting the ACG bit in the **Run-Mode Clock Configuration (RCC)** register specifies that the system uses sleep modes.

Deep Sleep Mode Clock Gating Control Register 1 (DCGC1)

Base 0x400F.E000
Offset 0x124
Type R/W, reset 0x00000000

	31	30	29	28	27	26	25	24	23	22	21	20	19	18	17	16
	reserved							COMP0	reserved				TIMER3	TIMER2	TIMER1	TIMER0
Type	RO	RO	RO	RO	RO	RO	RO	R/W	RO	RO	RO	RO	R/W	R/W	R/W	R/W
Reset	0	0	0	0	0	0	0	0	0	0	0	0	0	0	0	0

	15	14	13	12	11	10	9	8	7	6	5	4	3	2	1	0
	reserved			I2C0	reserved		QEI1	QEI0	reserved			SSI0	reserved		UART1	UART0
Type	RO	RO	RO	R/W	RO	RO	R/W	R/W	RO	RO	RO	R/W	RO	RO	R/W	R/W
Reset	0	0	0	0	0	0	0	0	0	0	0	0	0	0	0	0

Bit/Field	Name	Type	Reset	Description
31:25	reserved	RO	0	Software should not rely on the value of a reserved bit. To provide compatibility with future products, the value of a reserved bit should be preserved across a read-modify-write operation.
24	COMP0	R/W	0	Analog Comparator 0 Clock Gating This bit controls the clock gating for analog comparator 0. If set, the unit receives a clock and functions. Otherwise, the unit is unclocked and disabled. If the unit is unclocked, reads or writes to the unit will generate a bus fault.
23:20	reserved	RO	0	Software should not rely on the value of a reserved bit. To provide compatibility with future products, the value of a reserved bit should be preserved across a read-modify-write operation.
19	TIMER3	R/W	0	Timer 3 Clock Gating Control This bit controls the clock gating for General-Purpose Timer module 3. If set, the unit receives a clock and functions. Otherwise, the unit is unclocked and disabled. If the unit is unclocked, reads or writes to the unit will generate a bus fault.
18	TIMER2	R/W	0	Timer 2 Clock Gating Control This bit controls the clock gating for General-Purpose Timer module 2. If set, the unit receives a clock and functions. Otherwise, the unit is unclocked and disabled. If the unit is unclocked, reads or writes to the unit will generate a bus fault.

Bit/Field	Name	Type	Reset	Description
17	TIMER1	R/W	0	Timer 1 Clock Gating Control This bit controls the clock gating for General-Purpose Timer module 1. If set, the unit receives a clock and functions. Otherwise, the unit is unclocked and disabled. If the unit is unclocked, reads or writes to the unit will generate a bus fault.
16	TIMER0	R/W	0	Timer 0 Clock Gating Control This bit controls the clock gating for General-Purpose Timer module 0. If set, the unit receives a clock and functions. Otherwise, the unit is unclocked and disabled. If the unit is unclocked, reads or writes to the unit will generate a bus fault.
15:13	reserved	RO	0	Software should not rely on the value of a reserved bit. To provide compatibility with future products, the value of a reserved bit should be preserved across a read-modify-write operation.
12	I2C0	R/W	0	I2C0 Clock Gating Control This bit controls the clock gating for I2C module 0. If set, the unit receives a clock and functions. Otherwise, the unit is unclocked and disabled. If the unit is unclocked, reads or writes to the unit will generate a bus fault.
11:10	reserved	RO	0	Software should not rely on the value of a reserved bit. To provide compatibility with future products, the value of a reserved bit should be preserved across a read-modify-write operation.
9	QEI1	R/W	0	QEI1 Clock Gating Control This bit controls the clock gating for QEI module 1. If set, the unit receives a clock and functions. Otherwise, the unit is unclocked and disabled. If the unit is unclocked, reads or writes to the unit will generate a bus fault.
8	QEI0	R/W	0	QEI0 Clock Gating Control This bit controls the clock gating for QEI module 0. If set, the unit receives a clock and functions. Otherwise, the unit is unclocked and disabled. If the unit is unclocked, reads or writes to the unit will generate a bus fault.
7:5	reserved	RO	0	Software should not rely on the value of a reserved bit. To provide compatibility with future products, the value of a reserved bit should be preserved across a read-modify-write operation.
4	SSI0	R/W	0	SSI0 Clock Gating Control This bit controls the clock gating for SSI module 0. If set, the unit receives a clock and functions. Otherwise, the unit is unclocked and disabled. If the unit is unclocked, reads or writes to the unit will generate a bus fault.
3:2	reserved	RO	0	Software should not rely on the value of a reserved bit. To provide compatibility with future products, the value of a reserved bit should be preserved across a read-modify-write operation.
1	UART1	R/W	0	UART1 Clock Gating Control This bit controls the clock gating for UART module 1. If set, the unit receives a clock and functions. Otherwise, the unit is unclocked and disabled. If the unit is unclocked, reads or writes to the unit will generate a bus fault.

Bit/Field	Name	Type	Reset	Description
0	UART0	R/W	0	UART0 Clock Gating Control This bit controls the clock gating for UART module 0. If set, the unit receives a clock and functions. Otherwise, the unit is unclocked and disabled. If the unit is unclocked, reads or writes to the unit will generate a bus fault.

Register 24: Run Mode Clock Gating Control Register 2 (RCGC2), offset 0x108

This register controls the clock gating logic. Each bit controls a clock enable for a given interface, function, or unit. If set, the unit receives a clock and functions. Otherwise, the unit is unclocked and disabled (saving power). If the unit is unclocked, reads or writes to the unit will generate a bus fault. The reset state of these bits is 0 (unclocked) unless otherwise noted, so that all functional units are disabled. It is the responsibility of software to enable the ports necessary for the application. Note that these registers may contain more bits than there are interfaces, functions, or units to control. This is to assure reasonable code compatibility with other family and future parts. **RCGC2** is the clock configuration register for running operation, **SCGC2** for Sleep operation, and **DCGC2** for Deep-Sleep operation. Setting the ACG bit in the **Run-Mode Clock Configuration (RCC)** register specifies that the system uses sleep modes.

Run Mode Clock Gating Control Register 2 (RCGC2)

Base 0x400F.E000
Offset 0x108
Type R/W, reset 0x00000000

	31	30	29	28	27	26	25	24	23	22	21	20	19	18	17	16
	reserved	EPHY0	reserved	EMAC0	reserved											
Type	RO	R/W	RO	R/W	RO	RO	RO	RO	RO	RO	RO	RO	RO	RO	RO	RO
Reset	0	0	0	0	0	0	0	0	0	0	0	0	0	0	0	0

	15	14	13	12	11	10	9	8	7	6	5	4	3	2	1	0
	reserved									GPIOG	GPIOF	GPIOE	GPIOD	GPIOC	GPIOB	GPIOA
Type	RO	RO	RO	RO	RO	RO	RO	RO	RO	R/W	R/W	R/W	R/W	R/W	R/W	R/W
Reset	0	0	0	0	0	0	0	0	0	0	0	0	0	0	0	0

Bit/Field	Name	Type	Reset	Description
31	reserved	RO	0	Software should not rely on the value of a reserved bit. To provide compatibility with future products, the value of a reserved bit should be preserved across a read-modify-write operation.
30	EPHY0	R/W	0	PHY0 Clock Gating Control This bit controls the clock gating for Ethernet PHY unit 0. If set, the unit receives a clock and functions. Otherwise, the unit is unclocked and disabled. If the unit is unclocked, reads or writes to the unit will generate a bus fault.
29	reserved	RO	0	Software should not rely on the value of a reserved bit. To provide compatibility with future products, the value of a reserved bit should be preserved across a read-modify-write operation.
28	EMAC0	R/W	0	MAC0 Clock Gating Control This bit controls the clock gating for Ethernet MAC unit 0. If set, the unit receives a clock and functions. Otherwise, the unit is unclocked and disabled. If the unit is unclocked, reads or writes to the unit will generate a bus fault.
27:7	reserved	RO	0	Software should not rely on the value of a reserved bit. To provide compatibility with future products, the value of a reserved bit should be preserved across a read-modify-write operation.
6	GPIOG	R/W	0	Port G Clock Gating Control This bit controls the clock gating for Port G. If set, the unit receives a clock and functions. Otherwise, the unit is unclocked and disabled. If the unit is unclocked, reads or writes to the unit will generate a bus fault.

Bit/Field	Name	Type	Reset	Description
5	GPIOF	R/W	0	Port F Clock Gating Control This bit controls the clock gating for Port F. If set, the unit receives a clock and functions. Otherwise, the unit is unclocked and disabled. If the unit is unclocked, reads or writes to the unit will generate a bus fault.
4	GPIOE	R/W	0	Port E Clock Gating Control This bit controls the clock gating for Port E. If set, the unit receives a clock and functions. Otherwise, the unit is unclocked and disabled. If the unit is unclocked, reads or writes to the unit will generate a bus fault.
3	GPIOD	R/W	0	Port D Clock Gating Control This bit controls the clock gating for Port D. If set, the unit receives a clock and functions. Otherwise, the unit is unclocked and disabled. If the unit is unclocked, reads or writes to the unit will generate a bus fault.
2	GPIOC	R/W	0	Port C Clock Gating Control This bit controls the clock gating for Port C. If set, the unit receives a clock and functions. Otherwise, the unit is unclocked and disabled. If the unit is unclocked, reads or writes to the unit will generate a bus fault.
1	GPIOB	R/W	0	Port B Clock Gating Control This bit controls the clock gating for Port B. If set, the unit receives a clock and functions. Otherwise, the unit is unclocked and disabled. If the unit is unclocked, reads or writes to the unit will generate a bus fault.
0	GPIOA	R/W	0	Port A Clock Gating Control This bit controls the clock gating for Port A. If set, the unit receives a clock and functions. Otherwise, the unit is unclocked and disabled. If the unit is unclocked, reads or writes to the unit will generate a bus fault.

Register 25: Sleep Mode Clock Gating Control Register 2 (SCGC2), offset 0x118

This register controls the clock gating logic. Each bit controls a clock enable for a given interface, function, or unit. If set, the unit receives a clock and functions. Otherwise, the unit is unclocked and disabled (saving power). If the unit is unclocked, reads or writes to the unit will generate a bus fault. The reset state of these bits is 0 (unclocked) unless otherwise noted, so that all functional units are disabled. It is the responsibility of software to enable the ports necessary for the application. Note that these registers may contain more bits than there are interfaces, functions, or units to control. This is to assure reasonable code compatibility with other family and future parts. **RCGC2** is the clock configuration register for running operation, **SCGC2** for Sleep operation, and **DCGC2** for Deep-Sleep operation. Setting the ACG bit in the **Run-Mode Clock Configuration (RCC)** register specifies that the system uses sleep modes.

Sleep Mode Clock Gating Control Register 2 (SCGC2)

Base 0x400F.E000
Offset 0x118
Type R/W, reset 0x00000000

	31	30	29	28	27	26	25	24	23	22	21	20	19	18	17	16
	reserved	EPHY0	reserved	EMAC0	reserved											
Type	RO	R/W	RO	R/W	RO	RO	RO	RO	RO	RO	RO	RO	RO	RO	RO	RO
Reset	0	0	0	0	0	0	0	0	0	0	0	0	0	0	0	0

	15	14	13	12	11	10	9	8	7	6	5	4	3	2	1	0
	reserved									GPIOG	GPIOF	GPIOE	GPIOD	GPIOC	GPIOB	GPIOA
Type	RO	RO	RO	RO	RO	RO	RO	RO	RO	R/W	R/W	R/W	R/W	R/W	R/W	R/W
Reset	0	0	0	0	0	0	0	0	0	0	0	0	0	0	0	0

Bit/Field	Name	Type	Reset	Description
31	reserved	RO	0	Software should not rely on the value of a reserved bit. To provide compatibility with future products, the value of a reserved bit should be preserved across a read-modify-write operation.
30	EPHY0	R/W	0	PHY0 Clock Gating Control This bit controls the clock gating for Ethernet PHY unit 0. If set, the unit receives a clock and functions. Otherwise, the unit is unclocked and disabled. If the unit is unclocked, reads or writes to the unit will generate a bus fault.
29	reserved	RO	0	Software should not rely on the value of a reserved bit. To provide compatibility with future products, the value of a reserved bit should be preserved across a read-modify-write operation.
28	EMAC0	R/W	0	MAC0 Clock Gating Control This bit controls the clock gating for Ethernet MAC unit 0. If set, the unit receives a clock and functions. Otherwise, the unit is unclocked and disabled. If the unit is unclocked, reads or writes to the unit will generate a bus fault.
27:7	reserved	RO	0	Software should not rely on the value of a reserved bit. To provide compatibility with future products, the value of a reserved bit should be preserved across a read-modify-write operation.

Bit/Field	Name	Type	Reset	Description
6	GPIOG	R/W	0	Port G Clock Gating Control This bit controls the clock gating for Port G. If set, the unit receives a clock and functions. Otherwise, the unit is unclocked and disabled. If the unit is unclocked, reads or writes to the unit will generate a bus fault.
5	GPIOF	R/W	0	Port F Clock Gating Control This bit controls the clock gating for Port F. If set, the unit receives a clock and functions. Otherwise, the unit is unclocked and disabled. If the unit is unclocked, reads or writes to the unit will generate a bus fault.
4	GPIOE	R/W	0	Port E Clock Gating Control This bit controls the clock gating for Port E. If set, the unit receives a clock and functions. Otherwise, the unit is unclocked and disabled. If the unit is unclocked, reads or writes to the unit will generate a bus fault.
3	GPIOD	R/W	0	Port D Clock Gating Control This bit controls the clock gating for Port D. If set, the unit receives a clock and functions. Otherwise, the unit is unclocked and disabled. If the unit is unclocked, reads or writes to the unit will generate a bus fault.
2	GPIOC	R/W	0	Port C Clock Gating Control This bit controls the clock gating for Port C. If set, the unit receives a clock and functions. Otherwise, the unit is unclocked and disabled. If the unit is unclocked, reads or writes to the unit will generate a bus fault.
1	GPIOB	R/W	0	Port B Clock Gating Control This bit controls the clock gating for Port B. If set, the unit receives a clock and functions. Otherwise, the unit is unclocked and disabled. If the unit is unclocked, reads or writes to the unit will generate a bus fault.
0	GPIOA	R/W	0	Port A Clock Gating Control This bit controls the clock gating for Port A. If set, the unit receives a clock and functions. Otherwise, the unit is unclocked and disabled. If the unit is unclocked, reads or writes to the unit will generate a bus fault.

Register 26: Deep Sleep Mode Clock Gating Control Register 2 (DCGC2), offset 0x128

This register controls the clock gating logic. Each bit controls a clock enable for a given interface, function, or unit. If set, the unit receives a clock and functions. Otherwise, the unit is unclocked and disabled (saving power). If the unit is unclocked, reads or writes to the unit will generate a bus fault. The reset state of these bits is 0 (unclocked) unless otherwise noted, so that all functional units are disabled. It is the responsibility of software to enable the ports necessary for the application. Note that these registers may contain more bits than there are interfaces, functions, or units to control. This is to assure reasonable code compatibility with other family and future parts. **RCGC2** is the clock configuration register for running operation, **SCGC2** for Sleep operation, and **DCGC2** for Deep-Sleep operation. Setting the ACG bit in the **Run-Mode Clock Configuration (RCC)** register specifies that the system uses sleep modes.

Deep Sleep Mode Clock Gating Control Register 2 (DCGC2)

Base 0x400F.E000
Offset 0x128
Type R/W, reset 0x00000000

	31	30	29	28	27	26	25	24	23	22	21	20	19	18	17	16
	reserved	EPHY0	reserved	EMAC0	reserved											
Type	RO	R/W	RO	R/W	RO	RO	RO	RO	RO	RO	RO	RO	RO	RO	RO	RO
Reset	0	0	0	0	0	0	0	0	0	0	0	0	0	0	0	0

	15	14	13	12	11	10	9	8	7	6	5	4	3	2	1	0
	reserved									GPIOG	GPIOF	GPIOE	GPIOD	GPIOC	GPIOB	GPIOA
Type	RO	RO	RO	RO	RO	RO	RO	RO	RO	R/W	R/W	R/W	R/W	R/W	R/W	R/W
Reset	0	0	0	0	0	0	0	0	0	0	0	0	0	0	0	0

Bit/Field	Name	Type	Reset	Description
31	reserved	RO	0	Software should not rely on the value of a reserved bit. To provide compatibility with future products, the value of a reserved bit should be preserved across a read-modify-write operation.
30	EPHY0	R/W	0	PHY0 Clock Gating Control This bit controls the clock gating for Ethernet PHY unit 0. If set, the unit receives a clock and functions. Otherwise, the unit is unclocked and disabled. If the unit is unclocked, reads or writes to the unit will generate a bus fault.
29	reserved	RO	0	Software should not rely on the value of a reserved bit. To provide compatibility with future products, the value of a reserved bit should be preserved across a read-modify-write operation.
28	EMAC0	R/W	0	MAC0 Clock Gating Control This bit controls the clock gating for Ethernet MAC unit 0. If set, the unit receives a clock and functions. Otherwise, the unit is unclocked and disabled. If the unit is unclocked, reads or writes to the unit will generate a bus fault.
27:7	reserved	RO	0	Software should not rely on the value of a reserved bit. To provide compatibility with future products, the value of a reserved bit should be preserved across a read-modify-write operation.

Bit/Field	Name	Type	Reset	Description
6	GPIOG	R/W	0	Port G Clock Gating Control This bit controls the clock gating for Port G. If set, the unit receives a clock and functions. Otherwise, the unit is unclocked and disabled. If the unit is unclocked, reads or writes to the unit will generate a bus fault.
5	GPIOF	R/W	0	Port F Clock Gating Control This bit controls the clock gating for Port F. If set, the unit receives a clock and functions. Otherwise, the unit is unclocked and disabled. If the unit is unclocked, reads or writes to the unit will generate a bus fault.
4	GPIOE	R/W	0	Port E Clock Gating Control This bit controls the clock gating for Port E. If set, the unit receives a clock and functions. Otherwise, the unit is unclocked and disabled. If the unit is unclocked, reads or writes to the unit will generate a bus fault.
3	GPIOD	R/W	0	Port D Clock Gating Control This bit controls the clock gating for Port D. If set, the unit receives a clock and functions. Otherwise, the unit is unclocked and disabled. If the unit is unclocked, reads or writes to the unit will generate a bus fault.
2	GPIOC	R/W	0	Port C Clock Gating Control This bit controls the clock gating for Port C. If set, the unit receives a clock and functions. Otherwise, the unit is unclocked and disabled. If the unit is unclocked, reads or writes to the unit will generate a bus fault.
1	GPIOB	R/W	0	Port B Clock Gating Control This bit controls the clock gating for Port B. If set, the unit receives a clock and functions. Otherwise, the unit is unclocked and disabled. If the unit is unclocked, reads or writes to the unit will generate a bus fault.
0	GPIOA	R/W	0	Port A Clock Gating Control This bit controls the clock gating for Port A. If set, the unit receives a clock and functions. Otherwise, the unit is unclocked and disabled. If the unit is unclocked, reads or writes to the unit will generate a bus fault.

Register 27: Software Reset Control 0 (SRCR0), offset 0x040

Writes to this register are masked by the bits in the **Device Capabilities 1 (DC1)** register.

Software Reset Control 0 (SRCR0)

Base 0x400F.E000
Offset 0x040
Type R/W, reset 0x00000000

	31	30	29	28	27	26	25	24	23	22	21	20	19	18	17	16
	reserved							CAN0	reserved			PWM	reserved			ADC
Type	RO	RO	RO	RO	RO	RO	RO	R/W	RO	RO	RO	R/W	RO	RO	RO	R/W
Reset	0	0	0	0	0	0	0	0	0	0	0	0	0	0	0	0

	15	14	13	12	11	10	9	8	7	6	5	4	3	2	1	0
	reserved									HIB	reserved		WDT	reserved		
Type	RO	RO	RO	RO	RO	RO	RO	RO	RO	R/W	RO	RO	R/W	RO	RO	RO
Reset	0	0	0	0	0	0	0	0	0	0	0	0	0	0	0	0

Bit/Field	Name	Type	Reset	Description
31:25	reserved	RO	0	Software should not rely on the value of a reserved bit. To provide compatibility with future products, the value of a reserved bit should be preserved across a read-modify-write operation.
24	CAN0	R/W	0	CAN0 Reset Control Reset control for CAN unit 0.
23:21	reserved	RO	0	Software should not rely on the value of a reserved bit. To provide compatibility with future products, the value of a reserved bit should be preserved across a read-modify-write operation.
20	PWM	R/W	0	PWM Reset Control Reset control for PWM module.
19:17	reserved	RO	0	Software should not rely on the value of a reserved bit. To provide compatibility with future products, the value of a reserved bit should be preserved across a read-modify-write operation.
16	ADC	R/W	0	ADC0 Reset Control Reset control for SAR ADC module 0.
15:7	reserved	RO	0	Software should not rely on the value of a reserved bit. To provide compatibility with future products, the value of a reserved bit should be preserved across a read-modify-write operation.
6	HIB	R/W	0	HIB Reset Control Reset control for the Hibernation module.
5:4	reserved	RO	0	Software should not rely on the value of a reserved bit. To provide compatibility with future products, the value of a reserved bit should be preserved across a read-modify-write operation.
3	WDT	R/W	0	WDT Reset Control Reset control for Watchdog unit.
2:0	reserved	RO	0	Software should not rely on the value of a reserved bit. To provide compatibility with future products, the value of a reserved bit should be preserved across a read-modify-write operation.

Register 28: Software Reset Control 1 (SRCR1), offset 0x044

Writes to this register are masked by the bits in the **Device Capabilities 2 (DC2)** register.

Software Reset Control 1 (SRCR1)

Base 0x400F.E000
Offset 0x044
Type R/W, reset 0x00000000

	31	30	29	28	27	26	25	24	23	22	21	20	19	18	17	16
	reserved							COMP0	reserved				TIMER3	TIMER2	TIMER1	TIMER0
Type	RO	RO	RO	RO	RO	RO	RO	R/W	RO	RO	RO	RO	R/W	R/W	R/W	R/W
Reset	0	0	0	0	0	0	0	0	0	0	0	0	0	0	0	0

	15	14	13	12	11	10	9	8	7	6	5	4	3	2	1	0
	reserved			I2C0	reserved		QEI1	QEI0	reserved			SSI0	reserved		UART1	UART0
Type	RO	RO	RO	R/W	RO	RO	R/W	R/W	RO	RO	RO	R/W	RO	RO	R/W	R/W
Reset	0	0	0	0	0	0	0	0	0	0	0	0	0	0	0	0

Bit/Field	Name	Type	Reset	Description
31:25	reserved	RO	0	Software should not rely on the value of a reserved bit. To provide compatibility with future products, the value of a reserved bit should be preserved across a read-modify-write operation.
24	COMP0	R/W	0	Analog Comp 0 Reset Control Reset control for analog comparator 0.
23:20	reserved	RO	0	Software should not rely on the value of a reserved bit. To provide compatibility with future products, the value of a reserved bit should be preserved across a read-modify-write operation.
19	TIMER3	R/W	0	Timer 3 Reset Control Reset control for General-Purpose Timer module 3.
18	TIMER2	R/W	0	Timer 2 Reset Control Reset control for General-Purpose Timer module 2.
17	TIMER1	R/W	0	Timer 1 Reset Control Reset control for General-Purpose Timer module 1.
16	TIMER0	R/W	0	Timer 0 Reset Control Reset control for General-Purpose Timer module 0.
15:13	reserved	RO	0	Software should not rely on the value of a reserved bit. To provide compatibility with future products, the value of a reserved bit should be preserved across a read-modify-write operation.
12	I2C0	R/W	0	I2C0 Reset Control Reset control for I2C unit 0.
11:10	reserved	RO	0	Software should not rely on the value of a reserved bit. To provide compatibility with future products, the value of a reserved bit should be preserved across a read-modify-write operation.
9	QEI1	R/W	0	QEI1 Reset Control Reset control for QEI unit 1.

Bit/Field	Name	Type	Reset	Description
8	QEI0	R/W	0	QEI0 Reset Control Reset control for QEI unit 0.
7:5	reserved	RO	0	Software should not rely on the value of a reserved bit. To provide compatibility with future products, the value of a reserved bit should be preserved across a read-modify-write operation.
4	SSI0	R/W	0	SSI0 Reset Control Reset control for SSI unit 0.
3:2	reserved	RO	0	Software should not rely on the value of a reserved bit. To provide compatibility with future products, the value of a reserved bit should be preserved across a read-modify-write operation.
1	UART1	R/W	0	UART1 Reset Control Reset control for UART unit 1.
0	UART0	R/W	0	UART0 Reset Control Reset control for UART unit 0.

Register 29: Software Reset Control 2 (SRCR2), offset 0x048

Writes to this register are masked by the bits in the **Device Capabilities 4 (DC4)** register.

Software Reset Control 2 (SRCR2)

Base 0x400F.E000
Offset 0x048
Type R/W, reset 0x00000000

	31	30	29	28	27	26	25	24	23	22	21	20	19	18	17	16
	reserved	EPHY0	reserved	EMAC0	reserved											
Type	RO	R/W	RO	R/W	RO	RO	RO	RO	RO	RO	RO	RO	RO	RO	RO	RO
Reset	0	0	0	0	0	0	0	0	0	0	0	0	0	0	0	0

	15	14	13	12	11	10	9	8	7	6	5	4	3	2	1	0
	reserved									GPIOG	GPIOF	GPIOE	GPIOD	GPIOC	GPIOB	GPIOA
Type	RO	RO	RO	RO	RO	RO	RO	RO	RO	R/W	R/W	R/W	R/W	R/W	R/W	R/W
Reset	0	0	0	0	0	0	0	0	0	0	0	0	0	0	0	0

Bit/Field	Name	Type	Reset	Description
31	reserved	RO	0	Software should not rely on the value of a reserved bit. To provide compatibility with future products, the value of a reserved bit should be preserved across a read-modify-write operation.
30	EPHY0	R/W	0	PHY0 Reset Control Reset control for Ethernet PHY unit 0.
29	reserved	RO	0	Software should not rely on the value of a reserved bit. To provide compatibility with future products, the value of a reserved bit should be preserved across a read-modify-write operation.
28	EMAC0	R/W	0	MAC0 Reset Control Reset control for Ethernet MAC unit 0.
27:7	reserved	RO	0	Software should not rely on the value of a reserved bit. To provide compatibility with future products, the value of a reserved bit should be preserved across a read-modify-write operation.
6	GPIOG	R/W	0	Port G Reset Control Reset control for GPIO Port G.
5	GPIOF	R/W	0	Port F Reset Control Reset control for GPIO Port F.
4	GPIOE	R/W	0	Port E Reset Control Reset control for GPIO Port E.
3	GPIOD	R/W	0	Port D Reset Control Reset control for GPIO Port D.
2	GPIOC	R/W	0	Port C Reset Control Reset control for GPIO Port C.
1	GPIOB	R/W	0	Port B Reset Control Reset control for GPIO Port B.

Bit/Field	Name	Type	Reset	Description
0	GPIOA	R/W	0	Port A Reset Control Reset control for GPIO Port A.

7 Hibernation Module

The Hibernation Module manages removal and restoration of power to provide a means for reducing power consumption. When the processor and peripherals are idle, power can be completely removed with only the Hibernation module remaining powered. Power can be restored based on an external signal, or at a certain time using the built-in Real-Time Clock (RTC). The Hibernation module can be independently supplied from a battery or an auxiliary power supply.

The Hibernation module has the following features:

- System power control using discrete external regulator
- Dedicated pin for waking from an external signal
- Low-battery detection, signaling, and interrupt generation
- 32-bit real-time counter (RTC)
- Two 32-bit RTC match registers for timed wake-up and interrupt generation
- Clock source from a 32.768-kHz external oscillator or a 4.194304-MHz crystal
- RTC predivider trim for making fine adjustments to the clock rate
- 64 32-bit words of non-volatile memory
- Programmable interrupts for RTC match, external wake, and low battery events

7.1 Block Diagram

Figure 7-1. Hibernation Module Block Diagram

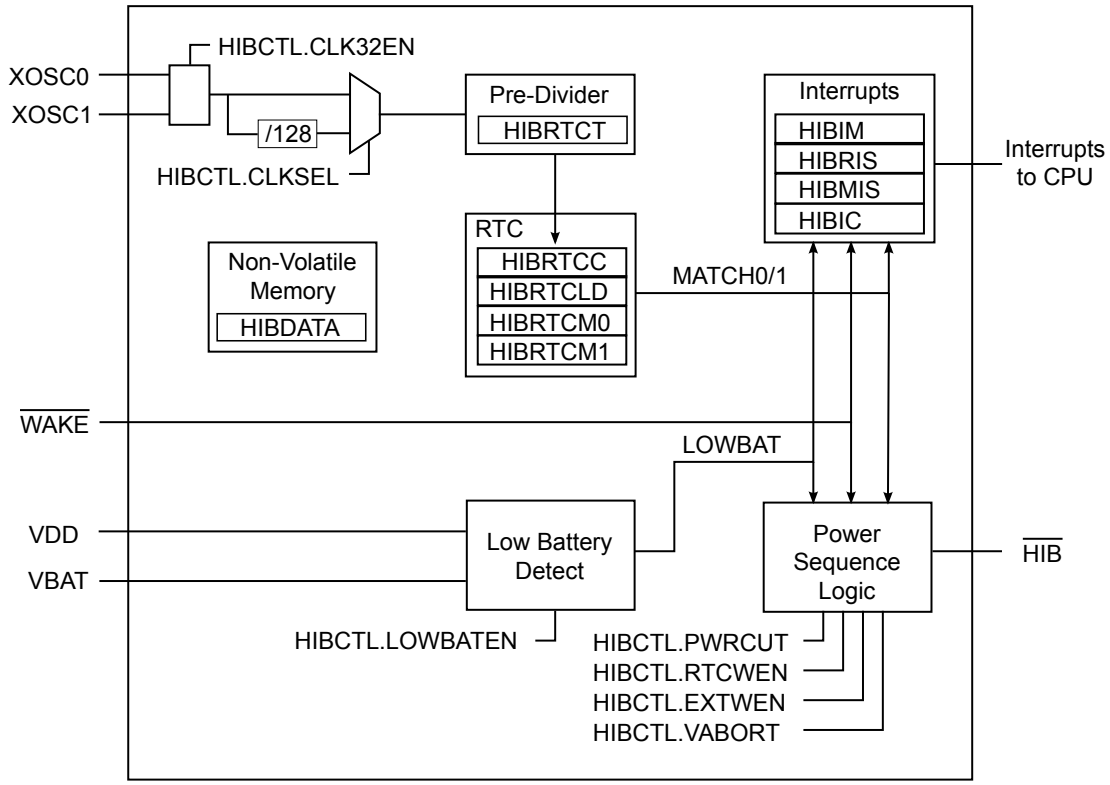

7.2 Functional Description

The Hibernation module controls the power to the processor with an enable signal (HIB) that signals an external voltage regulator to turn off.

The Hibernation module power source is determined dynamically. The supply voltage of the Hibernation module is the larger of the main voltage source (VDD) or the battery/auxilliary voltage source (VBAT). A voting circuit indicates the larger and an internal power switch selects the appropriate voltage source. The Hibernation module also has a separate clock source to maintain a real-time clock (RTC). Once in hibernation, the module signals an external voltage regulator to turn back on the power when an external pin (WAKE) is asserted, or when the internal RTC reaches a certain value. The Hibernation module can also detect when the battery voltage is low, and optionally prevent hibernation when this occurs.

Power-up from a power cut to code execution is defined as the regulator turn-on time (specified at $t_{HIB_TO_VDD}$ maximum) plus the normal chip POR (see “Hibernation Module” on page 629).

7.2.1 Register Access Timing

Because the Hibernation module has an independent clocking domain, certain registers must be written only with a timing gap between accesses. The delay time is $t_{HIB_REG_WRITE}$, therefore software must guarantee that a delay of $t_{HIB_REG_WRITE}$ is inserted between back-to-back writes to certain Hibernation registers, or between a write followed by a read to those same registers. There is no restriction on timing for back-to-back reads from the Hibernation module.

7.2.2 Clock Source

The Hibernation module must be clocked by an external source, even if the RTC feature is not used. An external oscillator or crystal can be used for this purpose. To use a crystal, a 4.194304-MHz crystal is connected to the `XOSC0` and `XOSC1` pins. This clock signal is divided by 128 internally to produce the 32.768-kHz clock reference. For an alternate clock source, a 32.768-kHz oscillator can be connected to the `XOSC0` pin. See Figure 7-2 on page 138 and Figure 7-3 on page 139. Note that these diagrams only show the connection to the Hibernation pins and not to the full system. See "Hibernation Module" on page 629 for specific values.

The clock source is enabled by setting the `CLK32EN` bit of the **HIBCTL** register. The type of clock source is selected by setting the `CLKSEL` bit to 0 for a 4.194304-MHz clock source, and to 1 for a 32.768-kHz clock source. If the bit is set to 0, the 4.194304-MHz input clock is divided by 128, resulting in a 32.768-kHz clock source. If a crystal is used for the clock source, the software must leave a delay of t_{XOSC_SETTLE} after setting the `CLK32EN` bit and before any other accesses to the Hibernation module registers. The delay allows the crystal to power up and stabilize. If an oscillator is used for the clock source, no delay is needed.

Figure 7-2. Clock Source Using Crystal

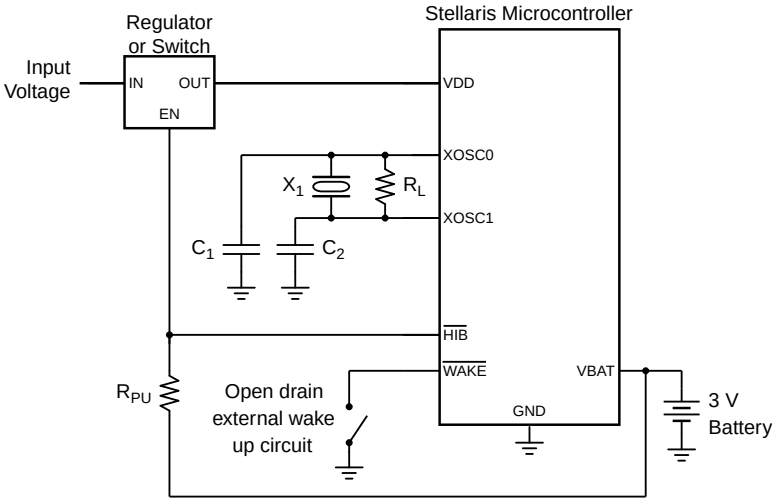

Note: X_1 = Crystal frequency is f_{XOSC_XTAL}.

$C_{1,2}$ = Capacitor value derived from crystal vendor load capacitance specifications.

R_L = Load resistor is R_{XOSC_LOAD}.

R_{PU} = Pull-up resistor (1 M½).

See "Hibernation Module" on page 629 for specific parameter values.

Figure 7-3. Clock Source Using Dedicated Oscillator

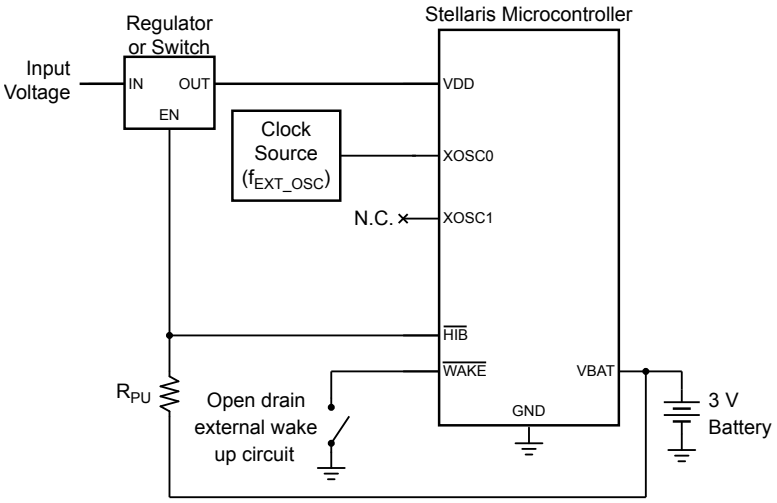

Note: R_{PU} = Pull-up resistor (1 M½).

7.2.3 Battery Management

The Hibernation module can be independently powered by a battery or an auxiliary power source. The module can monitor the voltage level of the battery and detect when the voltage drops below V_{LOWBAT}. When this happens, an interrupt can be generated. The module can also be configured so that it will not go into Hibernate mode if the battery voltage drops below this threshold. Battery voltage is not measured while in Hibernate mode.

Important: System level factors may affect the accuracy of the low battery detect circuit. The designer should consider battery type, discharge characteristics, and a test load during battery voltage measurements.

Note that the Hibernation module draws power from whichever source (VBAT or VDD) has the higher voltage. Therefore, it is important to design the circuit to ensure that VDD is higher that VBAT under nominal conditions or else the Hibernation module draws power from the battery even when VDD is available.

The Hibernation module can be configured to detect a low battery condition by setting the LOWBATEN bit of the **HIBCTL** register. In this configuration, the LOWBAT bit of the **HIBRIS** register will be set when the battery level is low. If the VABORT bit is also set, then the module is prevented from entering Hibernation mode when a low battery is detected. The module can also be configured to generate an interrupt for the low-battery condition (see “Interrupts and Status” on page 141).

7.2.4 Real-Time Clock

The Hibernation module includes a 32-bit counter that increments once per second with a proper clock source and configuration (see “Clock Source” on page 138). The 32.768-kHz clock signal is fed into a predivider register which counts down the 32.768-kHz clock ticks to achieve a once per second clock rate for the RTC. The rate can be adjusted to compensate for inaccuracies in the clock source by using the predivider trim register, **HIBRTCT**. This register has a nominal value of 0x7FFF, and is used for one second out of every 64 seconds to divide the input clock. This allows the software to make fine corrections to the clock rate by adjusting the predivider trim register up or down from 0x7FFF. The predivider trim should be adjusted up from 0x7FFF in order to slow down the RTC rate, and down from 0x7FFF in order to speed up the RTC rate.

The Hibernation module includes two 32-bit match registers that are compared to the value of the RTC counter. The match registers can be used to wake the processor from hibernation mode, or to generate an interrupt to the processor if it is not in hibernation.

The RTC must be enabled with the RTCEN bit of the **HIBCTL** register. The value of the RTC can be set at any time by writing to the **HIBRTCLD** register. The predivider trim can be adjusted by reading and writing the **HIBRTCT** register. The predivider uses this register once every 64 seconds to adjust the clock rate. The two match registers can be set by writing to the **HIBRTCM0** and **HIBRTCM1** registers. The RTC can be configured to generate interrupts by using the interrupt registers (see "Interrupts and Status" on page 141).

7.2.5 Non-Volatile Memory

The Hibernation module contains 64 32-bit words of memory which are retained during hibernation. This memory is powered from the battery or auxiliary power supply during hibernation. The processor software can save state information in this memory prior to hibernation, and can then recover the state upon waking. The non-volatile memory can be accessed through the **HIBDATA** registers.

7.2.6 Power Control

Important: The Hibernation Module requires special system implementation considerations when using $\overline{\text{HIB}}$ to control power, as it is intended to power-down all other sections of its host device. All system signals and power supplies that connect to the chip must be driven to 0 V_{DC} or powered down with the same regulator controlled by $\overline{\text{HIB}}$. See "Hibernation Module" on page 629 for more details.

The Hibernation module controls power to the microcontroller through the use of the $\overline{\text{HIB}}$ pin. This pin is intended to be connected to the enable signal of the external regulator(s) providing 3.3 V and/or 2.5 V to the microcontroller. When the $\overline{\text{HIB}}$ signal is asserted by the Hibernation module, the external regulator is turned off and no longer powers the system. The Hibernation module remains powered from the VBAT supply (which could be a battery or an auxiliary power source) until a Wake event. Power to the device is restored by deasserting the $\overline{\text{HIB}}$ signal, which causes the external regulator to turn power back on to the chip.

7.2.7 Initiating Hibernate

Hibernation mode is initiated by the microcontroller setting the HIBREQ bit of the **HIBCTL** register. Prior to doing this, a wake-up condition must be configured, either from the external WAKE pin, or by using an RTC match.

The Hibernation module is configured to wake from the external $\overline{\text{WAKE}}$ pin by setting the PINWEN bit of the **HIBCTL** register. It is configured to wake from RTC match by setting the RTCWEN bit. Either one or both of these bits can be set prior to going into hibernation. The $\overline{\text{WAKE}}$ pin includes a weak internal pull-up. Note that both the $\overline{\text{HIB}}$ and $\overline{\text{WAKE}}$ pins use the Hibernation module's internal power supply as the logic 1 reference.

When the Hibernation module wakes, the microcontroller will see a normal power-on reset. Software can detect that the power-on was due to a wake from hibernation by examining the raw interrupt status register (see "Interrupts and Status" on page 141) and by looking for state data in the non-volatile memory (see "Non-Volatile Memory" on page 140).

When the $\overline{\text{HIB}}$ signal deasserts, enabling the external regulator, the external regulator must reach the operating voltage within $t_{HIB_TO_VDD}$.

7.2.8 Interrupts and Status

The Hibernation module can generate interrupts when the following conditions occur:

- Assertion of $\overline{\text{WAKE}}$ pin
- RTC match
- Low battery detected

All of the interrupts are ORed together before being sent to the interrupt controller, so the Hibernate module can only generate a single interrupt request to the controller at any given time. The software interrupt handler can service multiple interrupt events by reading the **HIBMIS** register. Software can also read the status of the Hibernation module at any time by reading the **HIBRIS** register which shows all of the pending events. This register can be used at power-on to see if a wake condition is pending, which indicates to the software that a hibernation wake occurred.

The events that can trigger an interrupt are configured by setting the appropriate bits in the **HIBIM** register. Pending interrupts can be cleared by writing the corresponding bit in the **HIBIC** register.

7.3 Initialization and Configuration

The Hibernation module can be set in several different configurations. The following sections show the recommended programming sequence for various scenarios. The examples below assume that a 32.768-kHz oscillator is used, and thus always show bit 2 (CLKSEL) of the **HIBCTL** register set to 1. If a 4.194304-MHz crystal is used instead, then the CLKSEL bit remains cleared. Because the Hibernation module runs at 32.768 kHz and is asynchronous to the rest of the system, software must allow a delay of $t_{HIB_REG_WRITE}$ after writes to certain registers (see “Register Access Timing” on page 137). The registers that require a delay are listed in a note in “Register Map” on page 142 as well as in each register description.

7.3.1 Initialization

The Hibernation module clock source must be enabled first, even if the RTC feature is not used. If a 4.194304-MHz crystal is used, perform the following steps:

1. Write 0x40 to the **HIBCTL** register at offset 0x10 to enable the crystal and select the divide-by-128 input path.
2. Wait for a time of t_{XOSC_SETTLE} for the crystal to power up and stabilize before performing any other operations with the Hibernation module.

If a 32.678-kHz oscillator is used, then perform the following steps:

1. Write 0x44 to the **HIBCTL** register at offset 0x10 to enable the oscillator input.
2. No delay is necessary.

The above is only necessary when the entire system is initialized for the first time. If the processor is powered due to a wake from hibernation, then the Hibernation module has already been powered up and the above steps are not necessary. The software can detect that the Hibernation module and clock are already powered by examining the CLK32EN bit of the **HIBCTL** register.

7.3.2 RTC Match Functionality (No Hibernation)

Use the following steps to implement the RTC match functionality of the Hibernation module:

1. Write the required RTC match value to one of the **HIBRTCMn** registers at offset 0x004 or 0x008.
2. Write the required RTC load value to the **HIBRTCLD** register at offset 0x00C.
3. Set the required RTC match interrupt mask in the `RTCALT0` and `RTCALT1` bits (bits 1:0) in the **HIBIM** register at offset 0x014.
4. Write 0x0000.0041 to the **HIBCTL** register at offset 0x010 to enable the RTC to begin counting.

7.3.3 RTC Match/Wake-Up from Hibernation

Use the following steps to implement the RTC match and wake-up functionality of the Hibernation module:

1. Write the required RTC match value to the **HIBRTCMn** registers at offset 0x004 or 0x008.
2. Write the required RTC load value to the **HIBRTCLD** register at offset 0x00C.
3. Write any data to be retained during power cut to the **HIBDATA** register at offsets 0x030-0x12C.
4. Set the RTC Match Wake-Up and start the hibernation sequence by writing 0x0000.004F to the **HIBCTL** register at offset 0x010.

7.3.4 External Wake-Up from Hibernation

Use the following steps to implement the Hibernation module with the external `WAKE` pin as the wake-up source for the microcontroller:

1. Write any data to be retained during power cut to the **HIBDATA** register at offsets 0x030-0x12C.
2. Enable the external wake and start the hibernation sequence by writing 0x0000.0056 to the **HIBCTL** register at offset 0x010.

7.3.5 RTC/External Wake-Up from Hibernation

1. Write the required RTC match value to the **HIBRTCMn** registers at offset 0x004 or 0x008.
2. Write the required RTC load value to the **HIBRTCLD** register at offset 0x00C.
3. Write any data to be retained during power cut to the **HIBDATA** register at offsets 0x030-0x12C.
4. Set the RTC Match/External Wake-Up and start the hibernation sequence by writing 0x0000.005F to the **HIBCTL** register at offset 0x010.

7.4 Register Map

Table 7-1 on page 143 lists the Hibernation registers. All addresses given are relative to the Hibernation Module base address at 0x400F.C000.

Note: **HIBRTCC**, **HIBRTCM0**, **HIBRTCM1**, **HIBRTCLD**, **HIBRTCT**, and **HIBDATA** are on the Hibernation module clock domain and and have special timing requirements. Software should make use of the `WRC` bit in the **HIBCTL** register to ensure that the required timing gap has elapsed. See “Register Access Timing” on page 137.

Table 7-1. Hibernation Module Register Map

Offset	Name	Type	Reset	Description	See page
0x000	HIBRTCC	RO	0x0000.0000	Hibernation RTC Counter	144
0x004	HIBRTCM0	R/W	0xFFFF.FFFF	Hibernation RTC Match 0	145
0x008	HIBRTCM1	R/W	0xFFFF.FFFF	Hibernation RTC Match 1	146
0x00C	HIBRTCLD	R/W	0xFFFF.FFFF	Hibernation RTC Load	147
0x010	HIBCTL	R/W	0x0000.0000	Hibernation Control	148
0x014	HIBIM	R/W	0x0000.0000	Hibernation Interrupt Mask	150
0x018	HIBRIS	RO	0x0000.0000	Hibernation Raw Interrupt Status	151
0x01C	HIBMIS	RO	0x0000.0000	Hibernation Masked Interrupt Status	152
0x020	HIBIC	R/W1C	0x0000.0000	Hibernation Interrupt Clear	153
0x024	HIBRTCT	R/W	0x0000.7FFF	Hibernation RTC Trim	154
0x030-0x12C	HIBDATA	R/W	0x0000.0000	Hibernation Data	155

7.5 Register Descriptions

The remainder of this section lists and describes the Hibernation module registers, in numerical order by address offset.

Register 1: Hibernation RTC Counter (HIBRTCC), offset 0x000

This register is the current 32-bit value of the RTC counter.

Note: **HIBRTCC**, **HIBRTCM0**, **HIBRTCM1**, **HIBRTCLD**, **HIBRTCT**, and **HIBDATA** are on the Hibernation module clock domain and and have special timing requirements. Software should make use of the `WRC` bit in the **HIBCTL** register to ensure that the required timing gap has elapsed. See “Register Access Timing” on page 137.

Hibernation RTC Counter (HIBRTCC)

Base 0x400F.C000
Offset 0x000
Type RO, reset 0x0000.0000

	31	30	29	28	27	26	25	24	23	22	21	20	19	18	17	16
	RTCC															
Type	RO	RO	RO	RO	RO	RO	RO	RO	RO	RO	RO	RO	RO	RO	RO	RO
Reset	0	0	0	0	0	0	0	0	0	0	0	0	0	0	0	0

	15	14	13	12	11	10	9	8	7	6	5	4	3	2	1	0
	RTCC															
Type	RO	RO	RO	RO	RO	RO	RO	RO	RO	RO	RO	RO	RO	RO	RO	RO
Reset	0	0	0	0	0	0	0	0	0	0	0	0	0	0	0	0

Bit/Field	Name	Type	Reset	Description
31:0	RTCC	RO	0x0000.0000	RTC Counter A read returns the 32-bit counter value. This register is read-only. To change the value, use the **HIBRTCLD** register.

Register 2: Hibernation RTC Match 0 (HIBRTCM0), offset 0x004

This register is the 32-bit match 0 register for the RTC counter.

Note: **HIBRTCC**, **HIBRTCM0**, **HIBRTCM1**, **HIBRTCLD**, **HIBRTCT**, and **HIBDATA** are on the Hibernation module clock domain and and have special timing requirements. Software should make use of the `WRC` bit in the **HIBCTL** register to ensure that the required timing gap has elapsed. See “Register Access Timing” on page 137.

Hibernation RTC Match 0 (HIBRTCM0)

Base 0x400F.C000
Offset 0x004
Type R/W, reset 0xFFFF.FFFF

	31	30	29	28	27	26	25	24	23	22	21	20	19	18	17	16
	RTCM0															
Type	R/W	R/W	R/W	R/W	R/W	R/W	R/W	R/W	R/W	R/W	R/W	R/W	R/W	R/W	R/W	R/W
Reset	1	1	1	1	1	1	1	1	1	1	1	1	1	1	1	1

	15	14	13	12	11	10	9	8	7	6	5	4	3	2	1	0
	RTCM0															
Type	R/W	R/W	R/W	R/W	R/W	R/W	R/W	R/W	R/W	R/W	R/W	R/W	R/W	R/W	R/W	R/W
Reset	1	1	1	1	1	1	1	1	1	1	1	1	1	1	1	1

Bit/Field	Name	Type	Reset	Description
31:0	RTCM0	R/W	0xFFFF.FFFF	RTC Match 0 A write loads the value into the RTC match register. A read returns the current match value.

Register 3: Hibernation RTC Match 1 (HIBRTCM1), offset 0x008

This register is the 32-bit match 1 register for the RTC counter.

Note: **HIBRTCC**, **HIBRTCM0**, **HIBRTCM1**, **HIBRTCLD**, **HIBRTCT**, and **HIBDATA** are on the Hibernation module clock domain and and have special timing requirements. Software should make use of the `WRC` bit in the **HIBCTL** register to ensure that the required timing gap has elapsed. See “Register Access Timing” on page 137.

Hibernation RTC Match 1 (HIBRTCM1)

Base 0x400F.C000
Offset 0x008
Type R/W, reset 0xFFFF.FFFF

	31	30	29	28	27	26	25	24	23	22	21	20	19	18	17	16
	RTCM1															
Type	R/W	R/W	R/W	R/W	R/W	R/W	R/W	R/W	R/W	R/W	R/W	R/W	R/W	R/W	R/W	R/W
Reset	1	1	1	1	1	1	1	1	1	1	1	1	1	1	1	1

	15	14	13	12	11	10	9	8	7	6	5	4	3	2	1	0
	RTCM1															
Type	R/W	R/W	R/W	R/W	R/W	R/W	R/W	R/W	R/W	R/W	R/W	R/W	R/W	R/W	R/W	R/W
Reset	1	1	1	1	1	1	1	1	1	1	1	1	1	1	1	1

Bit/Field	Name	Type	Reset	Description
31:0	RTCM1	R/W	0xFFFF.FFFF	RTC Match 1 A write loads the value into the RTC match register. A read returns the current match value.

Register 4: Hibernation RTC Load (HIBRTCLD), offset 0x00C

This register is the 32-bit value loaded into the RTC counter.

Note: **HIBRTCC**, **HIBRTCM0**, **HIBRTCM1**, **HIBRTCLD**, **HIBRTCT**, and **HIBDATA** are on the Hibernation module clock domain and and have special timing requirements. Software should make use of the WRC bit in the **HIBCTL** register to ensure that the required timing gap has elapsed. See “Register Access Timing” on page 137.

Hibernation RTC Load (HIBRTCLD)

Base 0x400F.C000
Offset 0x00C
Type R/W, reset 0xFFFF.FFFF

	31	30	29	28	27	26	25	24	23	22	21	20	19	18	17	16
	RTCLD															
Type	R/W	R/W	R/W	R/W	R/W	R/W	R/W	R/W	R/W	R/W	R/W	R/W	R/W	R/W	R/W	R/W
Reset	1	1	1	1	1	1	1	1	1	1	1	1	1	1	1	1

	15	14	13	12	11	10	9	8	7	6	5	4	3	2	1	0
	RTCLD															
Type	R/W	R/W	R/W	R/W	R/W	R/W	R/W	R/W	R/W	R/W	R/W	R/W	R/W	R/W	R/W	R/W
Reset	1	1	1	1	1	1	1	1	1	1	1	1	1	1	1	1

Bit/Field	Name	Type	Reset	Description
31:0	RTCLD	R/W	0xFFFF.FFFF	RTC Load A write loads the current value into the RTC counter (RTCC). A read returns the 32-bit load value.

Register 5: Hibernation Control (HIBCTL), offset 0x010

This register is the control register for the Hibernation module.

Hibernation Control (HIBCTL)

Base 0x400F.C000
Offset 0x010
Type R/W, reset 0x0000.0000

	31	30	29	28	27	26	25	24	23	22	21	20	19	18	17	16
	reserved															
Type	RO	RO	RO	RO	RO	RO	RO	RO	RO	RO	RO	RO	RO	RO	RO	RO
Reset	0	0	0	0	0	0	0	0	0	0	0	0	0	0	0	0

	15	14	13	12	11	10	9	8	7	6	5	4	3	2	1	0
	reserved								VABORT	CLK32EN	LOWBATEN	PINWEN	RTCWEN	CLKSEL	HIBREQ	RTCEN
Type	RO	RO	RO	RO	RO	RO	RO	RO	R/W	R/W	R/W	R/W	R/W	R/W	R/W	R/W
Reset	0	0	0	0	0	0	0	0	0	0	0	0	0	0	0	0

Bit/Field	Name	Type	Reset	Description
31:8	reserved	RO	0x00	Software should not rely on the value of a reserved bit. To provide compatibility with future products, the value of a reserved bit should be preserved across a read-modify-write operation.
7	VABORT	R/W	0	Power Cut Abort Enable Value Description 0 Power cut occurs during a low-battery alert. 1 Power cut is aborted.
6	CLK32EN	R/W	0	Clocking Enable Value Description 0 Disabled 1 Enabled This bit must be enabled to use the Hibernation module. If a crystal is used, then software should wait 20 ms after setting this bit to allow the crystal to power up and stabilize.
5	LOWBATEN	R/W	0	Low Battery Monitoring Enable Value Description 0 Disabled 1 Enabled When set, low battery voltage detection is enabled (VBAT < V_{LOWBAT}).
4	PINWEN	R/W	0	External $\overline{\text{WAKE}}$ Pin Enable Value Description 0 Disabled 1 Enabled When set, an external event on the $\overline{\text{WAKE}}$ pin will re-power the device.

Bit/Field	Name	Type	Reset	Description
3	RTCWEN	R/W	0	RTC Wake-up Enable Value Description 0 Disabled 1 Enabled When set, an RTC match event (`RTCM0` or `RTCM1`) will re-power the device based on the RTC counter value matching the corresponding match register 0 or 1.
2	CLKSEL	R/W	0	Hibernation Module Clock Select Value Description 0 Use Divide by 128 output. Use this value for a 4.194304-MHz crystal. 1 Use raw output. Use this value for a 32.768-kHz oscillator.
1	HIBREQ	R/W	0	Hibernation Request Value Description 0 Disabled 1 Hibernation initiated After a wake-up event, this bit is cleared by hardware.
0	RTCEN	R/W	0	RTC Timer Enable Value Description 0 Disabled 1 Enabled

Register 6: Hibernation Interrupt Mask (HIBIM), offset 0x014

This register is the interrupt mask register for the Hibernation module interrupt sources.

Hibernation Interrupt Mask (HIBIM)

Base 0x400F.C000
Offset 0x014
Type R/W, reset 0x0000.0000

	31	30	29	28	27	26	25	24	23	22	21	20	19	18	17	16
	reserved															
Type	RO	RO	RO	RO	RO	RO	RO	RO	RO	RO	RO	RO	RO	RO	RO	RO
Reset	0	0	0	0	0	0	0	0	0	0	0	0	0	0	0	0

	15	14	13	12	11	10	9	8	7	6	5	4	3	2	1	0
	reserved												EXTW	LOWBAT	RTCALT1	RTCALT0
Type	RO	RO	RO	RO	RO	RO	RO	RO	RO	RO	RO	RO	R/W	R/W	R/W	R/W
Reset	0	0	0	0	0	0	0	0	0	0	0	0	0	0	0	0

Bit/Field	Name	Type	Reset	Description
31:4	reserved	RO	0x000.0000	Software should not rely on the value of a reserved bit. To provide compatibility with future products, the value of a reserved bit should be preserved across a read-modify-write operation.
3	EXTW	R/W	0	External Wake-Up Interrupt Mask Value Description 0 Masked 1 Unmasked
2	LOWBAT	R/W	0	Low Battery Voltage Interrupt Mask Value Description 0 Masked 1 Unmasked
1	RTCALT1	R/W	0	RTC Alert1 Interrupt Mask Value Description 0 Masked 1 Unmasked
0	RTCALT0	R/W	0	RTC Alert0 Interrupt Mask Value Description 0 Masked 1 Unmasked

Register 7: Hibernation Raw Interrupt Status (HIBRIS), offset 0x018

This register is the raw interrupt status for the Hibernation module interrupt sources.

Hibernation Raw Interrupt Status (HIBRIS)

Base 0x400F.C000
Offset 0x018
Type RO, reset 0x0000.0000

	31	30	29	28	27	26	25	24	23	22	21	20	19	18	17	16
	reserved															
Type	RO	RO	RO	RO	RO	RO	RO	RO	RO	RO	RO	RO	RO	RO	RO	RO
Reset	0	0	0	0	0	0	0	0	0	0	0	0	0	0	0	0

	15	14	13	12	11	10	9	8	7	6	5	4	3	2	1	0
	reserved												EXTW	LOWBAT	RTCALT1	RTCALT0
Type	RO	RO	RO	RO	RO	RO	RO	RO	RO	RO	RO	RO	RO	RO	RO	RO
Reset	0	0	0	0	0	0	0	0	0	0	0	0	0	0	0	0

Bit/Field	Name	Type	Reset	Description
31:4	reserved	RO	0x000.0000	Software should not rely on the value of a reserved bit. To provide compatibility with future products, the value of a reserved bit should be preserved across a read-modify-write operation.
3	EXTW	RO	0	External Wake-Up Raw Interrupt Status
2	LOWBAT	RO	0	Low Battery Voltage Raw Interrupt Status
1	RTCALT1	RO	0	RTC Alert1 Raw Interrupt Status
0	RTCALT0	RO	0	RTC Alert0 Raw Interrupt Status

Register 8: Hibernation Masked Interrupt Status (HIBMIS), offset 0x01C

This register is the masked interrupt status for the Hibernation module interrupt sources.

Hibernation Masked Interrupt Status (HIBMIS)

Base 0x400F.C000
Offset 0x01C
Type RO, reset 0x0000.0000

	31	30	29	28	27	26	25	24	23	22	21	20	19	18	17	16
	reserved															
Type	RO	RO	RO	RO	RO	RO	RO	RO	RO	RO	RO	RO	RO	RO	RO	RO
Reset	0	0	0	0	0	0	0	0	0	0	0	0	0	0	0	0

	15	14	13	12	11	10	9	8	7	6	5	4	3	2	1	0
	reserved												EXTW	LOWBAT	RTCALT1	RTCALT0
Type	RO	RO	RO	RO	RO	RO	RO	RO	RO	RO	RO	RO	RO	RO	RO	RO
Reset	0	0	0	0	0	0	0	0	0	0	0	0	0	0	0	0

Bit/Field	Name	Type	Reset	Description
31:4	reserved	RO	0x000.0000	Software should not rely on the value of a reserved bit. To provide compatibility with future products, the value of a reserved bit should be preserved across a read-modify-write operation.
3	EXTW	RO	0	External Wake-Up Masked Interrupt Status
2	LOWBAT	RO	0	Low Battery Voltage Masked Interrupt Status
1	RTCALT1	RO	0	RTC Alert1 Masked Interrupt Status
0	RTCALT0	RO	0	RTC Alert0 Masked Interrupt Status

Register 9: Hibernation Interrupt Clear (HIBIC), offset 0x020

This register is the interrupt write-one-to-clear register for the Hibernation module interrupt sources.

Hibernation Interrupt Clear (HIBIC)

Base 0x400F.C000
Offset 0x020
Type R/W1C, reset 0x0000.0000

	31	30	29	28	27	26	25	24	23	22	21	20	19	18	17	16
	reserved															
Type	RO	RO	RO	RO	RO	RO	RO	RO	RO	RO	RO	RO	RO	RO	RO	RO
Reset	0	0	0	0	0	0	0	0	0	0	0	0	0	0	0	0

	15	14	13	12	11	10	9	8	7	6	5	4	3	2	1	0
	reserved												EXTW	LOWBAT	RTCALT1	RTCALT0
Type	RO	RO	RO	RO	RO	RO	RO	RO	RO	RO	RO	RO	R/W1C	R/W1C	R/W1C	R/W1C
Reset	0	0	0	0	0	0	0	0	0	0	0	0	0	0	0	0

Bit/Field	Name	Type	Reset	Description
31:4	reserved	RO	0x000.0000	Software should not rely on the value of a reserved bit. To provide compatibility with future products, the value of a reserved bit should be preserved across a read-modify-write operation.
3	EXTW	R/W1C	0	External Wake-Up Masked Interrupt Clear Reads return an indeterminate value.
2	LOWBAT	R/W1C	0	Low Battery Voltage Masked Interrupt Clear Reads return an indeterminate value.
1	RTCALT1	R/W1C	0	RTC Alert1 Masked Interrupt Clear Reads return an indeterminate value.
0	RTCALT0	R/W1C	0	RTC Alert0 Masked Interrupt Clear Reads return an indeterminate value.

Register 10: Hibernation RTC Trim (HIBRTCT), offset 0x024

This register contains the value that is used to trim the RTC clock predivider. It represents the computed underflow value that is used during the trim cycle. It is represented as 0x7FFF ± N clock cycles.

Note: **HIBRTCC**, **HIBRTCM0**, **HIBRTCM1**, **HIBRTCLD**, **HIBRTCT**, and **HIBDATA** are on the Hibernation module clock domain and and have special timing requirements. Software should make use of the `WRC` bit in the **HIBCTL** register to ensure that the required timing gap has elapsed. See “Register Access Timing” on page 137.

Hibernation RTC Trim (HIBRTCT)

Base 0x400F.C000
Offset 0x024
Type R/W, reset 0x0000.7FFF

	31	30	29	28	27	26	25	24	23	22	21	20	19	18	17	16
	reserved															
Type	RO	RO	RO	RO	RO	RO	RO	RO	RO	RO	RO	RO	RO	RO	RO	RO
Reset	0	0	0	0	0	0	0	0	0	0	0	0	0	0	0	0

	15	14	13	12	11	10	9	8	7	6	5	4	3	2	1	0
	TRIM															
Type	R/W	R/W	R/W	R/W	R/W	R/W	R/W	R/W	R/W	R/W	R/W	R/W	R/W	R/W	R/W	R/W
Reset	0	1	1	1	1	1	1	1	1	1	1	1	1	1	1	1

Bit/Field	Name	Type	Reset	Description
31:16	reserved	RO	0x0000	Software should not rely on the value of a reserved bit. To provide compatibility with future products, the value of a reserved bit should be preserved across a read-modify-write operation.
15:0	TRIM	R/W	0x7FFF	RTC Trim Value This value is loaded into the RTC predivider every 64 seconds. It is used to adjust the RTC rate to account for drift and inaccuracy in the clock source. The compensation is made by software by adjusting the default value of 0x7FFF up or down.

Register 11: Hibernation Data (HIBDATA), offset 0x030-0x12C

This address space is implemented as a 64x32-bit memory (256 bytes). It can be loaded by the system processor in order to store any non-volatile state data and will not lose power during a power cut operation.

Note: **HIBRTCC**, **HIBRTCM0**, **HIBRTCM1**, **HIBRTCLD**, **HIBRTCT**, and **HIBDATA** are on the Hibernation module clock domain and and have special timing requirements. Software should make use of the `WRC` bit in the **HIBCTL** register to ensure that the required timing gap has elapsed. See “Register Access Timing” on page 137.

Hibernation Data (HIBDATA)

Base 0x400F.C000
Offset 0x030-0x12C
Type R/W, reset 0x0000.0000

	31	30	29	28	27	26	25	24	23	22	21	20	19	18	17	16
	RTD															
Type	R/W	R/W	R/W	R/W	R/W	R/W	R/W	R/W	R/W	R/W	R/W	R/W	R/W	R/W	R/W	R/W
Reset	0	0	0	0	0	0	0	0	0	0	0	0	0	0	0	0

	15	14	13	12	11	10	9	8	7	6	5	4	3	2	1	0
	RTD															
Type	R/W	R/W	R/W	R/W	R/W	R/W	R/W	R/W	R/W	R/W	R/W	R/W	R/W	R/W	R/W	R/W
Reset	0	0	0	0	0	0	0	0	0	0	0	0	0	0	0	0

Bit/Field	Name	Type	Reset	Description
31:0	RTD	R/W	0x0000.0000	Hibernation Module NV Registers[63:0]

8 Internal Memory

The LM3S8962 microcontroller comes with 64 KB of bit-banded SRAM and 256 KB of flash memory. The flash controller provides a user-friendly interface, making flash programming a simple task. Flash protection can be applied to the flash memory on a 2-KB block basis.

8.1 Block Diagram

Figure 8-1 on page 156 illustrates the Flash functions. The dashed boxes in the figure indicate registers residing in the System Control module rather than the Flash Control module.

Figure 8-1. Flash Block Diagram

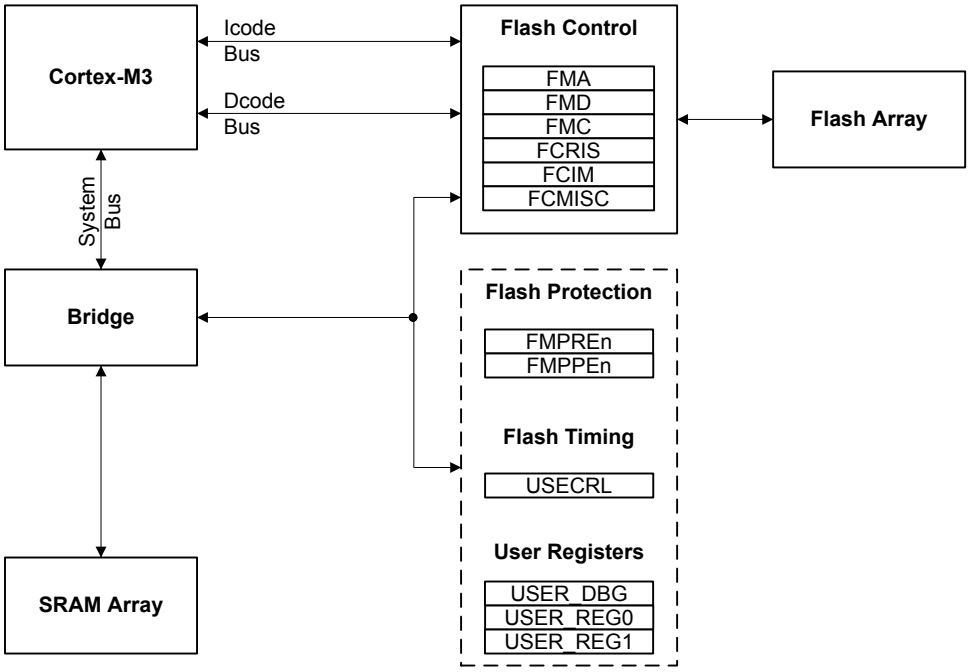

8.2 Functional Description

This section describes the functionality of the SRAM and Flash memories.

8.2.1 SRAM Memory

The internal SRAM of the Stellaris® devices is located at address 0x2000.0000 of the device memory map. To reduce the number of time consuming read-modify-write (RMW) operations, ARM has introduced *bit-banding* technology in the Cortex-M3 processor. With a bit-band-enabled processor, certain regions in the memory map (SRAM and peripheral space) can use address aliases to access individual bits in a single, atomic operation.

The bit-band alias is calculated by using the formula:

```
bit-band alias = bit-band base + (byte offset * 32) + (bit number * 4)
```

For example, if bit 3 at address 0x2000.1000 is to be modified, the bit-band alias is calculated as:

```
0x2200.0000 + (0x1000 * 32) + (3 * 4) = 0x2202.000C
```

With the alias address calculated, an instruction performing a read/write to address 0x2202.000C allows direct access to only bit 3 of the byte at address 0x2000.1000.

For details about bit-banding, please refer to Chapter 4, “Memory Map” in the *ARM® Cortex™-M3 Technical Reference Manual*.

8.2.2 Flash Memory

The flash is organized as a set of 1-KB blocks that can be individually erased. Erasing a block causes the entire contents of the block to be reset to all 1s. An individual 32-bit word can be programmed to change bits that are currently 1 to a 0. These blocks are paired into a set of 2-KB blocks that can be individually protected. The protection allows blocks to be marked as read-only or execute-only, providing different levels of code protection. Read-only blocks cannot be erased or programmed, protecting the contents of those blocks from being modified. Execute-only blocks cannot be erased or programmed, and can only be read by the controller instruction fetch mechanism, protecting the contents of those blocks from being read by either the controller or by a debugger.

See also “Serial Flash Loader” on page 641 for a preprogrammed flash-resident utility used to download code to the flash memory of a device without the use of a debug interface.

8.2.2.1 Flash Memory Timing

The timing for the flash is automatically handled by the flash controller. However, in order to do so, it must know the clock rate of the system in order to time its internal signals properly. The number of clock cycles per microsecond must be provided to the flash controller for it to accomplish this timing. It is software's responsibility to keep the flash controller updated with this information via the **USec Reload (USECRL)** register.

On reset, the **USECRL** register is loaded with a value that configures the flash timing so that it works with the maximum clock rate of the part. If software changes the system operating frequency, the new operating frequency minus 1 (in MHz) must be loaded into **USECRL** before any flash modifications are attempted. For example, if the device is operating at a speed of 20 MHz, a value of 0x13 (20-1) must be written to the **USECRL** register.

8.2.2.2 Flash Memory Protection

The user is provided two forms of flash protection per 2-KB flash blocks in four pairs of 32-bit wide registers. The protection policy for each form is controlled by individual bits (per policy per block) in the **FMPPEn** and **FMPREn** registers.

- **Flash Memory Protection Program Enable (FMPPEn)**: If set, the block may be programmed (written) or erased. If cleared, the block may not be changed.
- **Flash Memory Protection Read Enable (FMPREn)**: If set, the block may be executed or read by software or debuggers. If cleared, the block may only be executed and contents of the memory block are prohibited from being accessed as data.

The policies may be combined as shown in Table 8-1 on page 157.

Table 8-1. Flash Protection Policy Combinations

FMPPEn	FMPREn	Protection
0	0	Execute-only protection. The block may only be executed and may not be written or erased. This mode is used to protect code.
1	0	The block may be written, erased or executed, but not read. This combination is unlikely to be used.

FMPPEn	FMPREn	Protection
0	1	Read-only protection. The block may be read or executed but may not be written or erased. This mode is used to lock the block from further modification while allowing any read or execute access.
1	1	No protection. The block may be written, erased, executed or read.

An access that attempts to program or erase a PE-protected block is prohibited. A controller interrupt may be optionally generated (by setting the AMASK bit in the **FIM** register) to alert software developers of poorly behaving software during the development and debug phases.

An access that attempts to read an RE-protected block is prohibited. Such accesses return data filled with all 0s. A controller interrupt may be optionally generated to alert software developers of poorly behaving software during the development and debug phases.

The factory settings for the **FMPREn** and **FMPPEn** registers are a value of 1 for all implemented banks. This implements a policy of open access and programmability. The register bits may be changed by writing the specific register bit. The changes are not permanent until the register is committed (saved), at which point the bit change is permanent. If a bit is changed from a 1 to a 0 and not committed, it may be restored by executing a power-on reset sequence. Details on programming these bits are discussed in “Nonvolatile Register Programming” on page 158.

8.3 Flash Memory Initialization and Configuration

8.3.1 Flash Programming

The Stellaris® devices provide a user-friendly interface for flash programming. All erase/program operations are handled via three registers: **FMA**, **FMD**, and **FMC**.

8.3.1.1 To program a 32-bit word

1. Write source data to the **FMD** register.
2. Write the target address to the **FMA** register.
3. Write the flash write key and the WRITE bit (a value of 0xA442.0001) to the **FMC** register.
4. Poll the **FMC** register until the WRITE bit is cleared.

8.3.1.2 To perform an erase of a 1-KB page

1. Write the page address to the **FMA** register.
2. Write the flash write key and the ERASE bit (a value of 0xA442.0002) to the **FMC** register.
3. Poll the **FMC** register until the ERASE bit is cleared.

8.3.1.3 To perform a mass erase of the flash

1. Write the flash write key and the MERASE bit (a value of 0xA442.0004) to the **FMC** register.
2. Poll the **FMC** register until the MERASE bit is cleared.

8.3.2 Nonvolatile Register Programming

This section discusses how to update registers that are resident within the flash memory itself. These registers exist in a separate space from the main flash array and are not affected by an

ERASE or MASS ERASE operation. These nonvolatile registers are updated by using the COMT bit in the **FMC** register to activate a write operation. For the **USER_DBG** register, the data to be written must be loaded into the **FMD** register before it is "committed". All other registers are R/W and can have their operation tried before committing them to nonvolatile memory.

Important: These registers can only have bits changed from 1 to 0 by user programming, but can be restored to their factory default values by performing the sequence described in the section called “Recovering a "Locked" Device” on page 64. The mass erase of the main flash array caused by the sequence is performed prior to restoring these registers.

In addition, the **USER_REG0**, **USER_REG1**, and **USER_DBG** use bit 31 (NW) of their respective registers to indicate that they are available for user write. These three registers can only be written once whereas the flash protection registers may be written multiple times. Table 8-2 on page 159 provides the FMA address required for commitment of each of the registers and the source of the data to be written when the COMT bit of the **FMC** register is written with a value of 0xA442.0008. After writing the COMT bit, the user may poll the **FMC** register to wait for the commit operation to complete.

Table 8-2. Flash Resident Registers[a]

Register to be Committed	FMA Value	Data Source
FMPRE0	0x0000.0000	FMPRE0
FMPRE1	0x0000.0002	FMPRE1
FMPRE2	0x0000.0004	FMPRE2
FMPRE3	0x0000.0006	FMPRE3
FMPPE0	0x0000.0001	FMPPE0
FMPPE1	0x0000.0003	FMPPE1
FMPPE2	0x0000.0005	FMPPE2
FMPPE3	0x0000.0007	FMPPE3
USER_REG0	0x8000.0000	USER_REG0
USER_REG1	0x8000.0001	USER_REG1
USER_DBG	0x7510.0000	FMD

a. Which FMPREn and FMPPEn registers are available depend on the flash size of your particular Stellaris® device.

8.4 Register Map

Table 8-3 on page 159 lists the Flash memory and control registers. The offset listed is a hexadecimal increment to the register's address. The **FMA**, **FMD**, **FMC**, **FCRIS**, **FCIM**, and **FCMISC** registers are relative to the Flash control base address of 0x400F.D000. The **FMPREn**, **FMPPEn**, **USECRL**, **USER_DBG**, and **USER_REGn** registers are relative to the System Control base address of 0x400F.E000.

Table 8-3. Flash Register Map

Offset	Name	Type	Reset	Description	See page
Flash Registers (Flash Control Offset)					
0x000	FMA	R/W	0x0000.0000	Flash Memory Address	161
0x004	FMD	R/W	0x0000.0000	Flash Memory Data	162

Offset	Name	Type	Reset	Description	See page
0x008	FMC	R/W	0x0000.0000	Flash Memory Control	163
0x00C	FCRIS	RO	0x0000.0000	Flash Controller Raw Interrupt Status	165
0x010	FCIM	R/W	0x0000.0000	Flash Controller Interrupt Mask	166
0x014	FCMISC	R/W1C	0x0000.0000	Flash Controller Masked Interrupt Status and Clear	167
Flash Registers (System Control Offset)					
0x130	FMPRE0	R/W	0xFFFF.FFFF	Flash Memory Protection Read Enable 0	169
0x200	FMPRE0	R/W	0xFFFF.FFFF	Flash Memory Protection Read Enable 0	169
0x134	FMPPE0	R/W	0xFFFF.FFFF	Flash Memory Protection Program Enable 0	170
0x400	FMPPE0	R/W	0xFFFF.FFFF	Flash Memory Protection Program Enable 0	170
0x140	USECRL	R/W	0x31	USec Reload	168
0x1D0	USER_DBG	R/W	0xFFFF.FFFE	User Debug	171
0x1E0	USER_REG0	R/W	0xFFFF.FFFF	User Register 0	172
0x1E4	USER_REG1	R/W	0xFFFF.FFFF	User Register 1	173
0x204	FMPRE1	R/W	0xFFFF.FFFF	Flash Memory Protection Read Enable 1	174
0x208	FMPRE2	R/W	0xFFFF.FFFF	Flash Memory Protection Read Enable 2	175
0x20C	FMPRE3	R/W	0xFFFF.FFFF	Flash Memory Protection Read Enable 3	176
0x404	FMPPE1	R/W	0xFFFF.FFFF	Flash Memory Protection Program Enable 1	177
0x408	FMPPE2	R/W	0xFFFF.FFFF	Flash Memory Protection Program Enable 2	178
0x40C	FMPPE3	R/W	0xFFFF.FFFF	Flash Memory Protection Program Enable 3	179

8.5 Flash Register Descriptions (Flash Control Offset)

This section lists and describes the Flash Memory registers, in numerical order by address offset. Registers in this section are relative to the Flash control base address of 0x400F.D000.

Register 1: Flash Memory Address (FMA), offset 0x000

During a write operation, this register contains a 4-byte-aligned address and specifies where the data is written. During erase operations, this register contains a 1 KB-aligned address and specifies which page is erased. Note that the alignment requirements must be met by software or the results of the operation are unpredictable.

Flash Memory Address (FMA)

Base 0x400F.D000
Offset 0x000
Type R/W, reset 0x0000.0000

	31	30	29	28	27	26	25	24	23	22	21	20	19	18	17	16
	reserved														OFFSET	
Type	RO	RO	RO	RO	RO	RO	RO	RO	RO	RO	RO	RO	RO	RO	R/W	R/W
Reset	0	0	0	0	0	0	0	0	0	0	0	0	0	0	0	0

	15	14	13	12	11	10	9	8	7	6	5	4	3	2	1	0
	OFFSET															
Type	R/W	R/W	R/W	R/W	R/W	R/W	R/W	R/W	R/W	R/W	R/W	R/W	R/W	R/W	R/W	R/W
Reset	0	0	0	0	0	0	0	0	0	0	0	0	0	0	0	0

Bit/Field	Name	Type	Reset	Description
31:18	reserved	RO	0x0	Software should not rely on the value of a reserved bit. To provide compatibility with future products, the value of a reserved bit should be preserved across a read-modify-write operation.
17:0	OFFSET	R/W	0x0	Address Offset Address offset in flash where operation is performed, except for nonvolatile registers (see “Nonvolatile Register Programming” on page 158 for details on values for this field).

Register 2: Flash Memory Data (FMD), offset 0x004

This register contains the data to be written during the programming cycle or read during the read cycle. Note that the contents of this register are undefined for a read access of an execute-only block. This register is not used during the erase cycles.

Flash Memory Data (FMD)

Base 0x400F.D000
Offset 0x004
Type R/W, reset 0x0000.0000

	31	30	29	28	27	26	25	24	23	22	21	20	19	18	17	16
	DATA															
Type	R/W	R/W	R/W	R/W	R/W	R/W	R/W	R/W	R/W	R/W	R/W	R/W	R/W	R/W	R/W	R/W
Reset	0	0	0	0	0	0	0	0	0	0	0	0	0	0	0	0

	15	14	13	12	11	10	9	8	7	6	5	4	3	2	1	0
	DATA															
Type	R/W	R/W	R/W	R/W	R/W	R/W	R/W	R/W	R/W	R/W	R/W	R/W	R/W	R/W	R/W	R/W
Reset	0	0	0	0	0	0	0	0	0	0	0	0	0	0	0	0

Bit/Field	Name	Type	Reset	Description
31:0	DATA	R/W	0x0	Data Value Data value for write operation.

Register 3: Flash Memory Control (FMC), offset 0x008

When this register is written, the flash controller initiates the appropriate access cycle for the location specified by the **Flash Memory Address (FMA)** register (see page 161). If the access is a write access, the data contained in the **Flash Memory Data (FMD)** register (see page 162) is written.

This is the final register written and initiates the memory operation. There are four control bits in the lower byte of this register that, when set, initiate the memory operation. The most used of these register bits are the `ERASE` and `WRITE` bits.

It is a programming error to write multiple control bits and the results of such an operation are unpredictable.

Flash Memory Control (FMC)

Base 0x400F.D000
Offset 0x008
Type R/W, reset 0x0000.0000

	31	30	29	28	27	26	25	24	23	22	21	20	19	18	17	16
	WRKEY															
Type	WO	WO	WO	WO	WO	WO	WO	WO	WO	WO	WO	WO	WO	WO	WO	WO
Reset	0	0	0	0	0	0	0	0	0	0	0	0	0	0	0	0

	15	14	13	12	11	10	9	8	7	6	5	4	3	2	1	0
	reserved												COMT	MERASE	ERASE	WRITE
Type	RO	RO	RO	RO	RO	RO	RO	RO	RO	RO	RO	RO	R/W	R/W	R/W	R/W
Reset	0	0	0	0	0	0	0	0	0	0	0	0	0	0	0	0

Bit/Field	Name	Type	Reset	Description
31:16	WRKEY	WO	0x0	Flash Write Key This field contains a write key, which is used to minimize the incidence of accidental flash writes. The value 0xA442 must be written into this field for a write to occur. Writes to the **FMC** register without this `WRKEY` value are ignored. A read of this field returns the value 0.
15:4	reserved	RO	0x0	Software should not rely on the value of a reserved bit. To provide compatibility with future products, the value of a reserved bit should be preserved across a read-modify-write operation.
3	COMT	R/W	0	Commit Register Value Commit (write) of register value to nonvolatile storage. A write of 0 has no effect on the state of this bit. If read, the state of the previous commit access is provided. If the previous commit access is complete, a 0 is returned; otherwise, if the commit access is not complete, a 1 is returned. This can take up to 50 µs.
2	MERASE	R/W	0	Mass Erase Flash Memory If this bit is set, the flash main memory of the device is all erased. A write of 0 has no effect on the state of this bit. If read, the state of the previous mass erase access is provided. If the previous mass erase access is complete, a 0 is returned; otherwise, if the previous mass erase access is not complete, a 1 is returned. This can take up to 250 ms.

Bit/Field	Name	Type	Reset	Description
1	ERASE	R/W	0	Erase a Page of Flash Memory If this bit is set, the page of flash main memory as specified by the contents of **FMA** is erased. A write of 0 has no effect on the state of this bit. If read, the state of the previous erase access is provided. If the previous erase access is complete, a 0 is returned; otherwise, if the previous erase access is not complete, a 1 is returned. This can take up to 25 ms.
0	WRITE	R/W	0	Write a Word into Flash Memory If this bit is set, the data stored in **FMD** is written into the location as specified by the contents of **FMA**. A write of 0 has no effect on the state of this bit. If read, the state of the previous write update is provided. If the previous write access is complete, a 0 is returned; otherwise, if the write access is not complete, a 1 is returned. This can take up to 50 µs.

Register 4: Flash Controller Raw Interrupt Status (FCRIS), offset 0x00C

This register indicates that the flash controller has an interrupt condition. An interrupt is only signaled if the corresponding **FCIM** register bit is set.

Flash Controller Raw Interrupt Status (FCRIS)

Base 0x400F.D000
Offset 0x00C
Type RO, reset 0x0000.0000

	31	30	29	28	27	26	25	24	23	22	21	20	19	18	17	16
	reserved															
Type	RO	RO	RO	RO	RO	RO	RO	RO	RO	RO	RO	RO	RO	RO	RO	RO
Reset	0	0	0	0	0	0	0	0	0	0	0	0	0	0	0	0

	15	14	13	12	11	10	9	8	7	6	5	4	3	2	1	0
	reserved														PRIS	ARIS
Type	RO	RO	RO	RO	RO	RO	RO	RO	RO	RO	RO	RO	RO	RO	RO	RO
Reset	0	0	0	0	0	0	0	0	0	0	0	0	0	0	0	0

Bit/Field	Name	Type	Reset	Description
31:2	reserved	RO	0x0	Software should not rely on the value of a reserved bit. To provide compatibility with future products, the value of a reserved bit should be preserved across a read-modify-write operation.
1	PRIS	RO	0	Programming Raw Interrupt Status This bit indicates the current state of the programming cycle. If set, the programming cycle completed; if cleared, the programming cycle has not completed. Programming cycles are either write or erase actions generated through the **Flash Memory Control (FMC)** register bits (see page 163).
0	ARIS	RO	0	Access Raw Interrupt Status This bit indicates if the flash was improperly accessed. If set, the program tried to access the flash counter to the policy as set in the **Flash Memory Protection Read Enable (FMPREn)** and **Flash Memory Protection Program Enable (FMPPEn)** registers. Otherwise, no access has tried to improperly access the flash.

Register 5: Flash Controller Interrupt Mask (FCIM), offset 0x010

This register controls whether the flash controller generates interrupts to the controller.

Flash Controller Interrupt Mask (FCIM)

Base 0x400F.D000
Offset 0x010
Type R/W, reset 0x0000.0000

	31	30	29	28	27	26	25	24	23	22	21	20	19	18	17	16
	reserved															
Type	RO	RO	RO	RO	RO	RO	RO	RO	RO	RO	RO	RO	RO	RO	RO	RO
Reset	0	0	0	0	0	0	0	0	0	0	0	0	0	0	0	0

	15	14	13	12	11	10	9	8	7	6	5	4	3	2	1	0
	reserved														PMASK	AMASK
Type	RO	RO	RO	RO	RO	RO	RO	RO	RO	RO	RO	RO	RO	RO	R/W	R/W
Reset	0	0	0	0	0	0	0	0	0	0	0	0	0	0	0	0

Bit/Field	Name	Type	Reset	Description
31:2	reserved	RO	0x0	Software should not rely on the value of a reserved bit. To provide compatibility with future products, the value of a reserved bit should be preserved across a read-modify-write operation.
1	PMASK	R/W	0	Programming Interrupt Mask This bit controls the reporting of the programming raw interrupt status to the controller. If set, a programming-generated interrupt is promoted to the controller. Otherwise, interrupts are recorded but suppressed from the controller.
0	AMASK	R/W	0	Access Interrupt Mask This bit controls the reporting of the access raw interrupt status to the controller. If set, an access-generated interrupt is promoted to the controller. Otherwise, interrupts are recorded but suppressed from the controller.

Register 6: Flash Controller Masked Interrupt Status and Clear (FCMISC), offset 0x014

This register provides two functions. First, it reports the cause of an interrupt by indicating which interrupt source or sources are signalling the interrupt. Second, it serves as the method to clear the interrupt reporting.

Flash Controller Masked Interrupt Status and Clear (FCMISC)

Base 0x400F.D000
Offset 0x014
Type R/W1C, reset 0x0000.0000

	31	30	29	28	27	26	25	24	23	22	21	20	19	18	17	16
	reserved															
Type	RO	RO	RO	RO	RO	RO	RO	RO	RO	RO	RO	RO	RO	RO	RO	RO
Reset	0	0	0	0	0	0	0	0	0	0	0	0	0	0	0	0

	15	14	13	12	11	10	9	8	7	6	5	4	3	2	1	0
	reserved														PMISC	AMISC
Type	RO	RO	RO	RO	RO	RO	RO	RO	RO	RO	RO	RO	RO	RO	R/W1C	R/W1C
Reset	0	0	0	0	0	0	0	0	0	0	0	0	0	0	0	0

Bit/Field	Name	Type	Reset	Description
31:2	reserved	RO	0x0	Software should not rely on the value of a reserved bit. To provide compatibility with future products, the value of a reserved bit should be preserved across a read-modify-write operation.
1	PMISC	R/W1C	0	Programming Masked Interrupt Status and Clear This bit indicates whether an interrupt was signaled because a programming cycle completed and was not masked. This bit is cleared by writing a 1. The `PRIS` bit in the **FCRIS** register (see page 165) is also cleared when the `PMISC` bit is cleared.
0	AMISC	R/W1C	0	Access Masked Interrupt Status and Clear This bit indicates whether an interrupt was signaled because an improper access was attempted and was not masked. This bit is cleared by writing a 1. The `ARIS` bit in the **FCRIS** register is also cleared when the `AMISC` bit is cleared.

8.6 Flash Register Descriptions (System Control Offset)

The remainder of this section lists and describes the Flash Memory registers, in numerical order by address offset. Registers in this section are relative to the System Control base address of 0x400F.E000.

Register 7: USec Reload (USECRL), offset 0x140

Note: Offset is relative to System Control base address of 0x400F.E000

This register is provided as a means of creating a 1-µs tick divider reload value for the flash controller. The internal flash has specific minimum and maximum requirements on the length of time the high voltage write pulse can be applied. It is required that this register contain the operating frequency (in MHz -1) whenever the flash is being erased or programmed. The user is required to change this value if the clocking conditions are changed for a flash erase/program operation.

USec Reload (USECRL)

Base 0x400F.E000
Offset 0x140
Type R/W, reset 0x31

	31	30	29	28	27	26	25	24	23	22	21	20	19	18	17	16
	reserved															
Type	RO	RO	RO	RO	RO	RO	RO	RO	RO	RO	RO	RO	RO	RO	RO	RO
Reset	0	0	0	0	0	0	0	0	0	0	0	0	0	0	0	0

	15	14	13	12	11	10	9	8	7	6	5	4	3	2	1	0
	reserved								USEC							
Type	RO	RO	RO	RO	RO	RO	RO	RO	R/W	R/W	R/W	R/W	R/W	R/W	R/W	R/W
Reset	0	0	0	0	0	0	0	0	0	0	1	1	0	0	0	1

Bit/Field	Name	Type	Reset	Description
31:8	reserved	RO	0x0	Software should not rely on the value of a reserved bit. To provide compatibility with future products, the value of a reserved bit should be preserved across a read-modify-write operation.
7:0	USEC	R/W	0x31	Microsecond Reload Value MHz -1 of the controller clock when the flash is being erased or programmed. If the maximum system frequency is being used, USEC should be set to 0x31 (50 MHz) whenever the flash is being erased or programmed.

Register 8: Flash Memory Protection Read Enable 0 (FMPRE0), offset 0x130 and 0x200

Note: This register is aliased for backwards compatability.

Note: Offset is relative to System Control base address of 0x400FE000.

This register stores the read-only protection bits for each 2-KB flash block (**FMPPEn** stores the execute-only bits). This register is loaded during the power-on reset sequence. The factory settings for the **FMPREn** and **FMPPEn** registers are a value of 1 for all implemented banks. This achieves a policy of open access and programmability. The register bits may be changed by writing the specific register bit. However, this register is R/W0; the user can only change the protection bit from a 1 to a 0 (and may NOT change a 0 to a 1). The changes are not permanent until the register is committed (saved), at which point the bit change is permanent. If a bit is changed from a 1 to a 0 and not committed, it may be restored by executing a power-on reset sequence. For additional information, see the "Flash Memory Protection" section.

Flash Memory Protection Read Enable 0 (FMPRE0)

Base 0x400F.E000
Offset 0x130 and 0x200
Type R/W, reset 0xFFFF.FFFF

	31	30	29	28	27	26	25	24	23	22	21	20	19	18	17	16
	READ_ENABLE															
Type	R/W	R/W	R/W	R/W	R/W	R/W	R/W	R/W	R/W	R/W	R/W	R/W	R/W	R/W	R/W	R/W
Reset	1	1	1	1	1	1	1	1	1	1	1	1	1	1	1	1

	15	14	13	12	11	10	9	8	7	6	5	4	3	2	1	0
	READ_ENABLE															
Type	R/W	R/W	R/W	R/W	R/W	R/W	R/W	R/W	R/W	R/W	R/W	R/W	R/W	R/W	R/W	R/W
Reset	1	1	1	1	1	1	1	1	1	1	1	1	1	1	1	1

Bit/Field	Name	Type	Reset	Description
31:0	READ_ENABLE	R/W	0xFFFFFFFF	Flash Read Enable Enables 2-KB flash blocks to be executed or read. The policies may be combined as shown in the table “Flash Protection Policy Combinations”. Value — Description 0xFFFFFFFF — Enables 256 KB of flash.

Register 9: Flash Memory Protection Program Enable 0 (FMPPE0), offset 0x134 and 0x400

Note: This register is aliased for backwards compatability.

Note: Offset is relative to System Control base address of 0x400FE000.

This register stores the execute-only protection bits for each 2-KB flash block (**FMPREn** stores the execute-only bits). This register is loaded during the power-on reset sequence. The factory settings for the **FMPREn** and **FMPPEn** registers are a value of 1 for all implemented banks. This achieves a policy of open access and programmability. The register bits may be changed by writing the specific register bit. However, this register is R/W0; the user can only change the protection bit from a 1 to a 0 (and may NOT change a 0 to a 1). The changes are not permanent until the register is committed (saved), at which point the bit change is permanent. If a bit is changed from a 1 to a 0 and not committed, it may be restored by executing a power-on reset sequence. For additional information, see the "Flash Memory Protection" section.

Flash Memory Protection Program Enable 0 (FMPPE0)

Base 0x400F.E000
Offset 0x134 and 0x400
Type R/W, reset 0xFFFF.FFFF

	31	30	29	28	27	26	25	24	23	22	21	20	19	18	17	16
	PROG_ENABLE															
Type	R/W	R/W	R/W	R/W	R/W	R/W	R/W	R/W	R/W	R/W	R/W	R/W	R/W	R/W	R/W	R/W
Reset	1	1	1	1	1	1	1	1	1	1	1	1	1	1	1	1

	15	14	13	12	11	10	9	8	7	6	5	4	3	2	1	0
	PROG_ENABLE															
Type	R/W	R/W	R/W	R/W	R/W	R/W	R/W	R/W	R/W	R/W	R/W	R/W	R/W	R/W	R/W	R/W
Reset	1	1	1	1	1	1	1	1	1	1	1	1	1	1	1	1

Bit/Field	Name	Type	Reset	Description
31:0	PROG_ENABLE	R/W	0xFFFFFFFF	Flash Programming Enable Configures 2-KB flash blocks to be execute only. The policies may be combined as shown in the table “Flash Protection Policy Combinations”. Value — Description 0xFFFFFFFF — Enables 256 KB of flash.

Register 10: User Debug (USER_DBG), offset 0x1D0

Note: Offset is relative to System Control base address of 0x400FE000.

This register provides a write-once mechanism to disable external debugger access to the device in addition to 27 additional bits of user-defined data. The `DBG0` bit (bit 0) is set to 0 from the factory and the `DBG1` bit (bit 1) is set to 1, which enables external debuggers. Changing the `DBG1` bit to 0 disables any external debugger access to the device permanently, starting with the next power-up cycle of the device. The `NOTWRITTEN` bit (bit 31) indicates that the register is available to be written and is controlled through hardware to ensure that the register is only written once.

User Debug (USER_DBG)

Base 0x400F.E000
Offset 0x1D0
Type R/W, reset 0xFFFF.FFFE

	31	30	29	28	27	26	25	24	23	22	21	20	19	18	17	16
	NW	DATA														
Type	R/W	R/W	R/W	R/W	R/W	R/W	R/W	R/W	R/W	R/W	R/W	R/W	R/W	R/W	R/W	R/W
Reset	1	1	1	1	1	1	1	1	1	1	1	1	1	1	1	1

	15	14	13	12	11	10	9	8	7	6	5	4	3	2	1	0
	DATA														DBG1	DBG0
Type	R/W	R/W	R/W	R/W	R/W	R/W	R/W	R/W	R/W	R/W	R/W	R/W	R/W	R/W	R/W	R/W
Reset	1	1	1	1	1	1	1	1	1	1	1	1	1	1	1	0

Bit/Field	Name	Type	Reset	Description
31	NW	R/W	1	User Debug Not Written Specifies that this 32-bit dword has not been written.
30:2	DATA	R/W	0x1FFFFFFF	User Data Contains the user data value. This field is initialized to all 1s and can only be written once.
1	DBG1	R/W	1	Debug Control 1 The `DBG1` bit must be 1 and `DBG0` must be 0 for debug to be available.
0	DBG0	R/W	0	Debug Control 0 The `DBG1` bit must be 1 and `DBG0` must be 0 for debug to be available.

Register 11: User Register 0 (USER_REG0), offset 0x1E0

Note: Offset is relative to System Control base address of 0x400FE000.

This register provides 31 bits of user-defined data that is non-volatile and can only be written once. Bit 31 indicates that the register is available to be written and is controlled through hardware to ensure that the register is only written once. The write-once characteristics of this register are useful for keeping static information like communication addresses that need to be unique per part and would otherwise require an external EEPROM or other non-volatile device.

User Register 0 (USER_REG0)

Base 0x400F.E000
Offset 0x1E0
Type R/W, reset 0xFFFF.FFFF

	31	30	29	28	27	26	25	24	23	22	21	20	19	18	17	16
	NW	DATA														
Type	R/W	R/W	R/W	R/W	R/W	R/W	R/W	R/W	R/W	R/W	R/W	R/W	R/W	R/W	R/W	R/W
Reset	1	1	1	1	1	1	1	1	1	1	1	1	1	1	1	1

	15	14	13	12	11	10	9	8	7	6	5	4	3	2	1	0
	DATA															
Type	R/W	R/W	R/W	R/W	R/W	R/W	R/W	R/W	R/W	R/W	R/W	R/W	R/W	R/W	R/W	R/W
Reset	1	1	1	1	1	1	1	1	1	1	1	1	1	1	1	1

Bit/Field	Name	Type	Reset	Description
31	NW	R/W	1	Not Written Specifies that this 32-bit dword has not been written.
30:0	DATA	R/W	0x7FFFFFFF	User Data Contains the user data value. This field is initialized to all 1s and can only be written once.

Register 12: User Register 1 (USER_REG1), offset 0x1E4

Note: Offset is relative to System Control base address of 0x400FE000.

This register provides 31 bits of user-defined data that is non-volatile and can only be written once. Bit 31 indicates that the register is available to be written and is controlled through hardware to ensure that the register is only written once. The write-once characteristics of this register are useful for keeping static information like communication addresses that need to be unique per part and would otherwise require an external EEPROM or other non-volatile device.

User Register 1 (USER_REG1)

Base 0x400F.E000
Offset 0x1E4
Type R/W, reset 0xFFFF.FFFF

	31	30	29	28	27	26	25	24	23	22	21	20	19	18	17	16
	NW	DATA														
Type	R/W	R/W	R/W	R/W	R/W	R/W	R/W	R/W	R/W	R/W	R/W	R/W	R/W	R/W	R/W	R/W
Reset	1	1	1	1	1	1	1	1	1	1	1	1	1	1	1	1

	15	14	13	12	11	10	9	8	7	6	5	4	3	2	1	0
	DATA															
Type	R/W	R/W	R/W	R/W	R/W	R/W	R/W	R/W	R/W	R/W	R/W	R/W	R/W	R/W	R/W	R/W
Reset	1	1	1	1	1	1	1	1	1	1	1	1	1	1	1	1

Bit/Field	Name	Type	Reset	Description
31	NW	R/W	1	Not Written Specifies that this 32-bit dword has not been written.
30:0	DATA	R/W	0x7FFFFFFF	User Data Contains the user data value. This field is initialized to all 1s and can only be written once.

Register 13: Flash Memory Protection Read Enable 1 (FMPRE1), offset 0x204

Note: Offset is relative to System Control base address of 0x400FE000.

This register stores the read-only protection bits for each 2-KB flash block (**FMPPEn** stores the execute-only bits). This register is loaded during the power-on reset sequence. The factory settings for the **FMPREn** and **FMPPEn** registers are a value of 1 for all implemented banks. This achieves a policy of open access and programmability. The register bits may be changed by writing the specific register bit. However, this register is R/W0; the user can only change the protection bit from a 1 to a 0 (and may NOT change a 0 to a 1). The changes are not permanent until the register is committed (saved), at which point the bit change is permanent. If a bit is changed from a 1 to a 0 and not committed, it may be restored by executing a power-on reset sequence. For additional information, see the "Flash Memory Protection" section.

Flash Memory Protection Read Enable 1 (FMPRE1)

Base 0x400F.E000
Offset 0x204
Type R/W, reset 0xFFFF.FFFF

	31	30	29	28	27	26	25	24	23	22	21	20	19	18	17	16
	READ_ENABLE															
Type	R/W	R/W	R/W	R/W	R/W	R/W	R/W	R/W	R/W	R/W	R/W	R/W	R/W	R/W	R/W	R/W
Reset	1	1	1	1	1	1	1	1	1	1	1	1	1	1	1	1

	15	14	13	12	11	10	9	8	7	6	5	4	3	2	1	0
	READ_ENABLE															
Type	R/W	R/W	R/W	R/W	R/W	R/W	R/W	R/W	R/W	R/W	R/W	R/W	R/W	R/W	R/W	R/W
Reset	1	1	1	1	1	1	1	1	1	1	1	1	1	1	1	1

Bit/Field	Name	Type	Reset	Description
31:0	READ_ENABLE	R/W	0xFFFFFFFF	Flash Read Enable Enables 2-KB flash blocks to be executed or read. The policies may be combined as shown in the table “Flash Protection Policy Combinations”. Value — Description 0xFFFFFFFF — Enables 256 KB of flash.

Register 14: Flash Memory Protection Read Enable 2 (FMPRE2), offset 0x208

Note: Offset is relative to System Control base address of 0x400FE000.

This register stores the read-only protection bits for each 2-KB flash block (**FMPPEn** stores the execute-only bits). This register is loaded during the power-on reset sequence. The factory settings for the **FMPREn** and **FMPPEn** registers are a value of 1 for all implemented banks. This achieves a policy of open access and programmability. The register bits may be changed by writing the specific register bit. However, this register is R/W0; the user can only change the protection bit from a 1 to a 0 (and may NOT change a 0 to a 1). The changes are not permanent until the register is committed (saved), at which point the bit change is permanent. If a bit is changed from a 1 to a 0 and not committed, it may be restored by executing a power-on reset sequence. For additional information, see the "Flash Memory Protection" section.

Flash Memory Protection Read Enable 2 (FMPRE2)

Base 0x400F.E000
Offset 0x208
Type R/W, reset 0xFFFF.FFFF

	31	30	29	28	27	26	25	24	23	22	21	20	19	18	17	16
	READ_ENABLE															
Type	R/W	R/W	R/W	R/W	R/W	R/W	R/W	R/W	R/W	R/W	R/W	R/W	R/W	R/W	R/W	R/W
Reset	1	1	1	1	1	1	1	1	1	1	1	1	1	1	1	1

	15	14	13	12	11	10	9	8	7	6	5	4	3	2	1	0
	READ_ENABLE															
Type	R/W	R/W	R/W	R/W	R/W	R/W	R/W	R/W	R/W	R/W	R/W	R/W	R/W	R/W	R/W	R/W
Reset	1	1	1	1	1	1	1	1	1	1	1	1	1	1	1	1

Bit/Field	Name	Type	Reset	Description
31:0	READ_ENABLE	R/W	0xFFFFFFFF	Flash Read Enable Enables 2-KB flash blocks to be executed or read. The policies may be combined as shown in the table “Flash Protection Policy Combinations”. Value — Description 0xFFFFFFFF — Enables 256 KB of flash.

Register 15: Flash Memory Protection Read Enable 3 (FMPRE3), offset 0x20C

Note: Offset is relative to System Control base address of 0x400FE000.

This register stores the read-only protection bits for each 2-KB flash block (**FMPPEn** stores the execute-only bits). This register is loaded during the power-on reset sequence. The factory settings for the **FMPREn** and **FMPPEn** registers are a value of 1 for all implemented banks. This achieves a policy of open access and programmability. The register bits may be changed by writing the specific register bit. However, this register is R/W0; the user can only change the protection bit from a 1 to a 0 (and may NOT change a 0 to a 1). The changes are not permanent until the register is committed (saved), at which point the bit change is permanent. If a bit is changed from a 1 to a 0 and not committed, it may be restored by executing a power-on reset sequence. For additional information, see the "Flash Memory Protection" section.

Flash Memory Protection Read Enable 3 (FMPRE3)

Base 0x400F.E000
Offset 0x20C
Type R/W, reset 0xFFFF.FFFF

	31	30	29	28	27	26	25	24	23	22	21	20	19	18	17	16
	READ_ENABLE															
Type	R/W	R/W	R/W	R/W	R/W	R/W	R/W	R/W	R/W	R/W	R/W	R/W	R/W	R/W	R/W	R/W
Reset	1	1	1	1	1	1	1	1	1	1	1	1	1	1	1	1

	15	14	13	12	11	10	9	8	7	6	5	4	3	2	1	0
	READ_ENABLE															
Type	R/W	R/W	R/W	R/W	R/W	R/W	R/W	R/W	R/W	R/W	R/W	R/W	R/W	R/W	R/W	R/W
Reset	1	1	1	1	1	1	1	1	1	1	1	1	1	1	1	1

Bit/Field	Name	Type	Reset	Description
31:0	READ_ENABLE	R/W	0xFFFFFFFF	Flash Read Enable Enables 2-KB flash blocks to be executed or read. The policies may be combined as shown in the table “Flash Protection Policy Combinations”. Value — Description 0xFFFFFFFF — Enables 256 KB of flash.

Register 16: Flash Memory Protection Program Enable 1 (FMPPE1), offset 0x404

Note: Offset is relative to System Control base address of 0x400FE000.

This register stores the execute-only protection bits for each 2-KB flash block (**FMPREn** stores the execute-only bits). This register is loaded during the power-on reset sequence. The factory settings for the **FMPREn** and **FMPPEn** registers are a value of 1 for all implemented banks. This achieves a policy of open access and programmability. The register bits may be changed by writing the specific register bit. However, this register is R/W0; the user can only change the protection bit from a 1 to a 0 (and may NOT change a 0 to a 1). The changes are not permanent until the register is committed (saved), at which point the bit change is permanent. If a bit is changed from a 1 to a 0 and not committed, it may be restored by executing a power-on reset sequence. For additional information, see the "Flash Memory Protection" section.

Flash Memory Protection Program Enable 1 (FMPPE1)

Base 0x400F.E000
Offset 0x404
Type R/W, reset 0xFFFF.FFFF

	31	30	29	28	27	26	25	24	23	22	21	20	19	18	17	16
	PROG_ENABLE															
Type	R/W	R/W	R/W	R/W	R/W	R/W	R/W	R/W	R/W	R/W	R/W	R/W	R/W	R/W	R/W	R/W
Reset	1	1	1	1	1	1	1	1	1	1	1	1	1	1	1	1

	15	14	13	12	11	10	9	8	7	6	5	4	3	2	1	0
	PROG_ENABLE															
Type	R/W	R/W	R/W	R/W	R/W	R/W	R/W	R/W	R/W	R/W	R/W	R/W	R/W	R/W	R/W	R/W
Reset	1	1	1	1	1	1	1	1	1	1	1	1	1	1	1	1

Bit/Field	Name	Type	Reset	Description
31:0	PROG_ENABLE	R/W	0xFFFFFFFF	Flash Programming Enable Configures 2-KB flash blocks to be execute only. The policies may be combined as shown in the table “Flash Protection Policy Combinations”. Value — Description 0xFFFFFFFF — Enables 256 KB of flash.

Register 17: Flash Memory Protection Program Enable 2 (FMPPE2), offset 0x408

Note: Offset is relative to System Control base address of 0x400FE000.

This register stores the execute-only protection bits for each 2-KB flash block (**FMPREn** stores the execute-only bits). This register is loaded during the power-on reset sequence. The factory settings for the **FMPREn** and **FMPPEn** registers are a value of 1 for all implemented banks. This achieves a policy of open access and programmability. The register bits may be changed by writing the specific register bit. However, this register is R/W0; the user can only change the protection bit from a 1 to a 0 (and may NOT change a 0 to a 1). The changes are not permanent until the register is committed (saved), at which point the bit change is permanent. If a bit is changed from a 1 to a 0 and not committed, it may be restored by executing a power-on reset sequence. For additional information, see the "Flash Memory Protection" section.

Flash Memory Protection Program Enable 2 (FMPPE2)

Base 0x400F.E000
Offset 0x408
Type R/W, reset 0xFFFF.FFFF

	31	30	29	28	27	26	25	24	23	22	21	20	19	18	17	16
	PROG_ENABLE															
Type	R/W	R/W	R/W	R/W	R/W	R/W	R/W	R/W	R/W	R/W	R/W	R/W	R/W	R/W	R/W	R/W
Reset	1	1	1	1	1	1	1	1	1	1	1	1	1	1	1	1

	15	14	13	12	11	10	9	8	7	6	5	4	3	2	1	0
	PROG_ENABLE															
Type	R/W	R/W	R/W	R/W	R/W	R/W	R/W	R/W	R/W	R/W	R/W	R/W	R/W	R/W	R/W	R/W
Reset	1	1	1	1	1	1	1	1	1	1	1	1	1	1	1	1

Bit/Field	Name	Type	Reset	Description
31:0	PROG_ENABLE	R/W	0xFFFFFFFF	Flash Programming Enable Configures 2-KB flash blocks to be execute only. The policies may be combined as shown in the table “Flash Protection Policy Combinations”. Value — Description 0xFFFFFFFF — Enables 256 KB of flash.

Register 18: Flash Memory Protection Program Enable 3 (FMPPE3), offset 0x40C

Note: Offset is relative to System Control base address of 0x400FE000.

This register stores the execute-only protection bits for each 2-KB flash block (**FMPREn** stores the execute-only bits). This register is loaded during the power-on reset sequence. The factory settings for the **FMPREn** and **FMPPEn** registers are a value of 1 for all implemented banks. This achieves a policy of open access and programmability. The register bits may be changed by writing the specific register bit. However, this register is R/W0; the user can only change the protection bit from a 1 to a 0 (and may NOT change a 0 to a 1). The changes are not permanent until the register is committed (saved), at which point the bit change is permanent. If a bit is changed from a 1 to a 0 and not committed, it may be restored by executing a power-on reset sequence. For additional information, see the "Flash Memory Protection" section.

Flash Memory Protection Program Enable 3 (FMPPE3)

Base 0x400F.E000
Offset 0x40C
Type R/W, reset 0xFFFF.FFFF

	31	30	29	28	27	26	25	24	23	22	21	20	19	18	17	16
	PROG_ENABLE															
Type	R/W	R/W	R/W	R/W	R/W	R/W	R/W	R/W	R/W	R/W	R/W	R/W	R/W	R/W	R/W	R/W
Reset	1	1	1	1	1	1	1	1	1	1	1	1	1	1	1	1

	15	14	13	12	11	10	9	8	7	6	5	4	3	2	1	0
	PROG_ENABLE															
Type	R/W	R/W	R/W	R/W	R/W	R/W	R/W	R/W	R/W	R/W	R/W	R/W	R/W	R/W	R/W	R/W
Reset	1	1	1	1	1	1	1	1	1	1	1	1	1	1	1	1

Bit/Field	Name	Type	Reset	Description
31:0	PROG_ENABLE	R/W	0xFFFFFFFF	Flash Programming Enable Configures 2-KB flash blocks to be execute only. The policies may be combined as shown in the table “Flash Protection Policy Combinations”. Value — Description 0xFFFFFFFF — Enables 256 KB of flash.

9 General-Purpose Input/Outputs (GPIOs)

The GPIO module is composed of seven physical GPIO blocks, each corresponding to an individual GPIO port (Port A, Port B, Port C, Port D, Port E, Port F, Port G). The GPIO module supports 5-42 programmable input/output pins, depending on the peripherals being used.

The GPIO module has the following features:

- 5-42 GPIOs, depending on configuration
- 5-V-tolerant input/outputs
- Programmable control for GPIO interrupts
  - Interrupt generation masking
  - Edge-triggered on rising, falling, or both
  - Level-sensitive on High or Low values
- Bit masking in both read and write operations through address lines
- Can initiate an ADC sample sequence
- Pins configured as digital inputs are Schmitt-triggered.
- Programmable control for GPIO pad configuration
  - Weak pull-up or pull-down resistors
  - 2-mA, 4-mA, and 8-mA pad drive for digital communication; up to four pads can be configured with an 18-mA pad drive for high-current applications
  - Slew rate control for the 8-mA drive
  - Open drain enables
  - Digital input enables

9.1 Functional Description

Important: All GPIO pins are tri-stated by default (**GPIOAFSEL**=0, **GPIODEN**=0, **GPIOPDR**=0, and **GPIOPUR**=0), with the exception of the five JTAG/SWD pins (`PB7` and `PC[3:0]`). The JTAG/SWD pins default to their JTAG/SWD functionality (**GPIOAFSEL**=1, **GPIODEN=1** and **GPIOPUR**=1). A Power-On-Reset ($\overline{\text{POR}}$) or asserting $\overline{\text{RST}}$ puts both groups of pins back to their default state.

Each GPIO port is a separate hardware instantiation of the same physical block (see Figure 9-1 on page 181). The LM3S8962 microcontroller contains seven ports and thus seven of these physical GPIO blocks.

Figure 9-1. GPIO Port Block Diagram

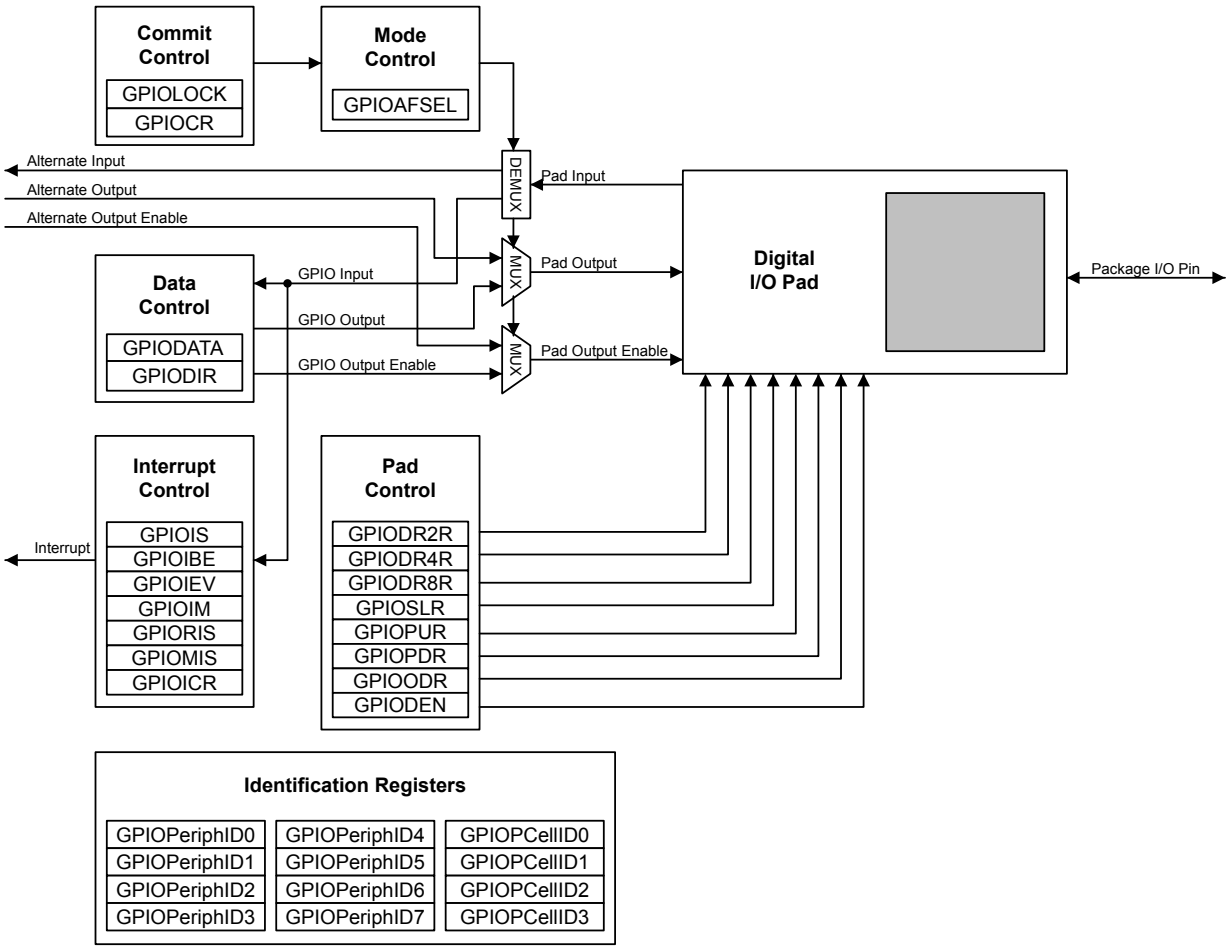

9.1.1 Data Control

The data control registers allow software to configure the operational modes of the GPIOs. The data direction register configures the GPIO as an input or an output while the data register either captures incoming data or drives it out to the pads.

9.1.1.1 Data Direction Operation

The **GPIO Direction (GPIODIR)** register (see page 189) is used to configure each individual pin as an input or output. When the data direction bit is set to 0, the GPIO is configured as an input and the corresponding data register bit will capture and store the value on the GPIO port. When the data direction bit is set to 1, the GPIO is configured as an output and the corresponding data register bit will be driven out on the GPIO port.

9.1.1.2 Data Register Operation

To aid in the efficiency of software, the GPIO ports allow for the modification of individual bits in the **GPIO Data (GPIODATA)** register (see page 188) by using bits [9:2] of the address bus as a mask. This allows software drivers to modify individual GPIO pins in a single instruction, without affecting the state of the other pins. This is in contrast to the "typical" method of doing a read-modify-write operation to set or clear an individual GPIO pin. To accommodate this feature, the **GPIODATA** register covers 256 locations in the memory map.

During a write, if the address bit associated with that data bit is set to 1, the value of the **GPIODATA** register is altered. If it is cleared to 0, it is left unchanged.

For example, writing a value of 0xEB to the address GPIODATA + 0x098 would yield as shown in Figure 9-2 on page 182, where u is data unchanged by the write.

Figure 9-2. GPIODATA Write Example

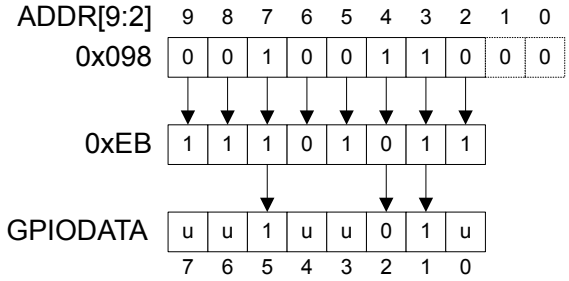

During a read, if the address bit associated with the data bit is set to 1, the value is read. If the address bit associated with the data bit is set to 0, it is read as a zero, regardless of its actual value. For example, reading address GPIODATA + 0x0C4 yields as shown in Figure 9-3 on page 182.

Figure 9-3. GPIODATA Read Example

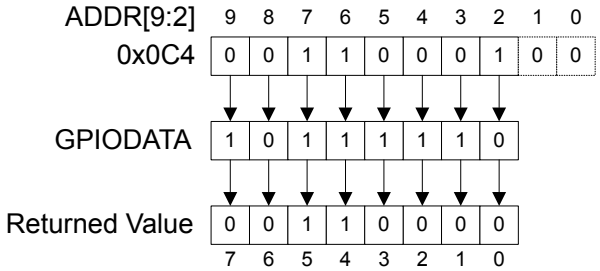

9.1.2 Interrupt Control

The interrupt capabilities of each GPIO port are controlled by a set of seven registers. With these registers, it is possible to select the source of the interrupt, its polarity, and the edge properties. When one or more GPIO inputs cause an interrupt, a single interrupt output is sent to the interrupt controller for the entire GPIO port. For edge-triggered interrupts, software must clear the interrupt to enable any further interrupts. For a level-sensitive interrupt, it is assumed that the external source holds the level constant for the interrupt to be recognized by the controller.

Three registers are required to define the edge or sense that causes interrupts:

- **GPIO Interrupt Sense (GPIOIS)** register (see page 190)
- **GPIO Interrupt Both Edges (GPIOIBE)** register (see page 191)
- **GPIO Interrupt Event (GPIOIEV)** register (see page 192)

Interrupts are enabled/disabled via the **GPIO Interrupt Mask (GPIOIM)** register (see page 193).

When an interrupt condition occurs, the state of the interrupt signal can be viewed in two locations: the **GPIO Raw Interrupt Status (GPIORIS)** and **GPIO Masked Interrupt Status (GPIOMIS)** registers (see page 194 and page 195). As the name implies, the **GPIOMIS** register only shows interrupt

conditions that are allowed to be passed to the controller. The **GPIORIS** register indicates that a GPIO pin meets the conditions for an interrupt, but has not necessarily been sent to the controller.

In addition to providing GPIO functionality, PB4 can also be used as an external trigger for the ADC. If PB4 is configured as a non-masked interrupt pin (the appropriate bit of GPIOIM is set to 1), not only is an interrupt for PortB generated, but an external trigger signal is sent to the ADC. If the **ADC Event Multiplexer Select (ADCEMUX)** register is configured to use the external trigger, an ADC conversion is initiated.

If no other PortB pins are being used to generate interrupts, the ARM Integrated Nested Vectored Interrupt Controller (NVIC) Interrupt Set Enable (SETNA) register can disable the PortB interrupts and the ADC interrupt can be used to read back the converted data. Otherwise, the PortB interrupt handler needs to ignore and clear interrupts on B4, and wait for the ADC interrupt or the ADC interrupt needs to be disabled in the SETNA register and the PortB interrupt handler polls the ADC registers until the conversion is completed.

Interrupts are cleared by writing a 1 to the appropriate bit of the **GPIO Interrupt Clear (GPIOICR)** register (see page 196).

When programming the following interrupt control registers, the interrupts should be masked (**GPIOIM** set to 0). Writing any value to an interrupt control register (**GPIOIS**, **GPIOIBE**, or **GPIOIEV**) can generate a spurious interrupt if the corresponding bits are enabled.

9.1.3 Mode Control

The GPIO pins can be controlled by either hardware or software. When hardware control is enabled via the **GPIO Alternate Function Select (GPIOAFSEL)** register (see page 197), the pin state is controlled by its alternate function (that is, the peripheral). Software control corresponds to GPIO mode, where the **GPIODATA** register is used to read/write the corresponding pins.

9.1.4 Commit Control

The GPIO commit control registers provide a layer of protection against accidental programming of critical hardware peripherals. Protection is currently provided for the five JTAG/SWD pins (PB7 and PC[3:0]). Writes to protected bits of the **GPIO Alternate Function Select (GPIOAFSEL)** register (see page 197) are not committed to storage unless the **GPIO Lock (GPIOLOCK)** register (see page 207) has been unlocked and the appropriate bits of the **GPIO Commit (GPIOCR)** register (see page 208) have been set to 1.

9.1.5 Pad Control

The pad control registers allow for GPIO pad configuration by software based on the application requirements. The pad control registers include the **GPIODR2R**, **GPIODR4R**, **GPIODR8R**, **GPIOODR**, **GPIOPUR**, **GPIOPDR**, **GPIOSLR**, and **GPIODEN** registers. These registers control drive strength, open-drain configuration, pull-up and pull-down resistors, slew-rate control and digital input enable.

For special high-current applications, the GPIO output buffers may be used with the following restrictions. With the GPIO pins configured as 8-mA output drivers, a total of four GPIO outputs may be used to sink current loads up to 18 mA each. At 18-mA sink current loading, the V_{OL} value is specified as 1.2 V. The high-current GPIO package pins must be selected such that there are only a maximum of two per side of the physical package or BGA pin group with the total number of high-current GPIO outputs not exceeding four for the entire package.

9.1.6 Identification

The identification registers configured at reset allow software to detect and identify the module as a GPIO block. The identification registers include the **GPIOPeriphID0**-**GPIOPeriphID7** registers as well as the **GPIOPCellID0**-**GPIOPCellID3** registers.

9.2 Initialization and Configuration

To use the GPIO, the peripheral clock must be enabled by setting the appropriate GPIO Port bit field (`GPIOn`) in the **RCGC2** register.

On reset, all GPIO pins (except for the five JTAG pins) are configured out of reset to be undriven (tristate): **GPIOAFSEL**=0, **GPIODEN**=0, **GPIOPDR**=0, and **GPIOPUR**=0. Table 9-1 on page 184 shows all possible configurations of the GPIO pads and the control register settings required to achieve them. Table 9-2 on page 185 shows how a rising edge interrupt would be configured for pin 2 of a GPIO port.

Table 9-1. GPIO Pad Configuration Examples

Configuration	GPIO Register Bit Value[a]									
	AFSEL	DIR	ODR	DEN	PUR	PDR	DR2R	DR4R	DR8R	SLR
Digital Input (GPIO)	0	0	0	1	?	?	X	X	X	X
Digital Output (GPIO)	0	1	0	1	?	?	?	?	?	?
Open Drain Input (GPIO)	0	0	1	1	X	X	X	X	X	X
Open Drain Output (GPIO)	0	1	1	1	X	X	?	?	?	?
Open Drain Input/Output (I^2C)	1	X	1	1	X	X	?	?	?	?
Digital Input (Timer CCP)	1	X	0	1	?	?	X	X	X	X
Digital Input (QEI)	1	X	0	1	?	?	X	X	X	X
Digital Output (PWM)	1	X	0	1	?	?	?	?	?	?
Digital Output (Timer PWM)	1	X	0	1	?	?	?	?	?	?
Digital Input/Output (SSI)	1	X	0	1	?	?	?	?	?	?
Digital Input/Output (UART)	1	X	0	1	?	?	?	?	?	?
Analog Input (Comparator)	0	0	0	0	0	0	X	X	X	X
Digital Output (Comparator)	1	X	0	1	?	?	?	?	?	?

a. X=Ignored (don't care bit)

?=Can be either 0 or 1, depending on the configuration

Table 9-2. GPIO Interrupt Configuration Example

Register	Desired Interrupt Event Trigger	Pin 2 Bit Value[a]							
		7	6	5	4	3	2	1	0
GPIOIS	0=edge 1=level	X	X	X	X	X	0	X	X
GPIOIBE	0=single edge 1=both edges	X	X	X	X	X	0	X	X
GPIOIEV	0=Low level, or negative edge 1=High level, or positive edge	X	X	X	X	X	1	X	X
GPIOIM	0=masked 1=not masked	0	0	0	0	0	1	0	0

a. X=Ignored (don't care bit)

9.3 Register Map

Table 9-3 on page 186 lists the GPIO registers. The offset listed is a hexadecimal increment to the register's address, relative to that GPIO port's base address:

- GPIO Port A: 0x4000.4000
- GPIO Port B: 0x4000.5000
- GPIO Port C: 0x4000.6000
- GPIO Port D: 0x4000.7000
- GPIO Port E: 0x4002.4000
- GPIO Port F: 0x4002.5000
- GPIO Port G: 0x4002.6000

Important: The GPIO registers in this chapter are duplicated in each GPIO block; however, depending on the block, all eight bits may not be connected to a GPIO pad. In those cases, writing to those unconnected bits has no effect, and reading those unconnected bits returns no meaningful data.

Note: The default reset value for the **GPIOAFSEL**, **GPIOPUR**, and **GPIODEN** registers are 0x0000.0000 for all GPIO pins, with the exception of the five JTAG/SWD pins (`PB7` and `PC[3:0]`). These five pins default to JTAG/SWD functionality. Because of this, the default reset value of these registers for GPIO Port B is 0x0000.0080 while the default reset value for Port C is 0x0000.000F.

The default register type for the **GPIOCR** register is RO for all GPIO pins with the exception of the five JTAG/SWD pins (`PB7` and `PC[3:0]`). These five pins are currently the only GPIOs that are protected by the **GPIOCR** register. Because of this, the register type for GPIO Port B7 and GPIO Port C[3:0] is R/W.

The default reset value for the **GPIOCR** register is 0x0000.00FF for all GPIO pins, with the exception of the five JTAG/SWD pins (`PB7` and `PC[3:0]`). To ensure that the JTAG port

is not accidentally programmed as a GPIO, these five pins default to non-committable. Because of this, the default reset value of **GPIOCR** for GPIO Port B is 0x0000.007F while the default reset value of GPIOCR for Port C is 0x0000.00F0.

Table 9-3. GPIO Register Map

Offset	Name	Type	Reset	Description	See page
0x000	GPIODATA	R/W	0x0000.0000	GPIO Data	188
0x400	GPIODIR	R/W	0x0000.0000	GPIO Direction	189
0x404	GPIOIS	R/W	0x0000.0000	GPIO Interrupt Sense	190
0x408	GPIOIBE	R/W	0x0000.0000	GPIO Interrupt Both Edges	191
0x40C	GPIOIEV	R/W	0x0000.0000	GPIO Interrupt Event	192
0x410	GPIOIM	R/W	0x0000.0000	GPIO Interrupt Mask	193
0x414	GPIORIS	RO	0x0000.0000	GPIO Raw Interrupt Status	194
0x418	GPIOMIS	RO	0x0000.0000	GPIO Masked Interrupt Status	195
0x41C	GPIOICR	W1C	0x0000.0000	GPIO Interrupt Clear	196
0x420	GPIOAFSEL	R/W	-	GPIO Alternate Function Select	197
0x500	GPIODR2R	R/W	0x0000.00FF	GPIO 2-mA Drive Select	199
0x504	GPIODR4R	R/W	0x0000.0000	GPIO 4-mA Drive Select	200
0x508	GPIODR8R	R/W	0x0000.0000	GPIO 8-mA Drive Select	201
0x50C	GPIOODR	R/W	0x0000.0000	GPIO Open Drain Select	202
0x510	GPIOPUR	R/W	-	GPIO Pull-Up Select	203
0x514	GPIOPDR	R/W	0x0000.0000	GPIO Pull-Down Select	204
0x518	GPIOSLR	R/W	0x0000.0000	GPIO Slew Rate Control Select	205
0x51C	GPIODEN	R/W	-	GPIO Digital Enable	206
0x520	GPIOLOCK	R/W	0x0000.0001	GPIO Lock	207
0x524	GPIOCR	-	-	GPIO Commit	208
0xFD0	GPIOPeriphID4	RO	0x0000.0000	GPIO Peripheral Identification 4	210
0xFD4	GPIOPeriphID5	RO	0x0000.0000	GPIO Peripheral Identification 5	211
0xFD8	GPIOPeriphID6	RO	0x0000.0000	GPIO Peripheral Identification 6	212
0xFDC	GPIOPeriphID7	RO	0x0000.0000	GPIO Peripheral Identification 7	213
0xFE0	GPIOPeriphID0	RO	0x0000.0061	GPIO Peripheral Identification 0	214
0xFE4	GPIOPeriphID1	RO	0x0000.0000	GPIO Peripheral Identification 1	215
0xFE8	GPIOPeriphID2	RO	0x0000.0018	GPIO Peripheral Identification 2	216
0xFEC	GPIOPeriphID3	RO	0x0000.0001	GPIO Peripheral Identification 3	217
0xFF0	GPIOPCellID0	RO	0x0000.000D	GPIO PrimeCell Identification 0	218

Offset	Name	Type	Reset	Description	See page
0xFF4	GPIOPCellID1	RO	0x0000.00F0	GPIO PrimeCell Identification 1	219
0xFF8	GPIOPCellID2	RO	0x0000.0005	GPIO PrimeCell Identification 2	220
0xFFC	GPIOPCellID3	RO	0x0000.00B1	GPIO PrimeCell Identification 3	221

9.4 Register Descriptions

The remainder of this section lists and describes the GPIO registers, in numerical order by address offset.

Register 1: GPIO Data (GPIODATA), offset 0x000

The **GPIODATA** register is the data register. In software control mode, values written in the **GPIODATA** register are transferred onto the GPIO port pins if the respective pins have been configured as outputs through the **GPIO Direction (GPIODIR)** register (see page 189).

In order to write to **GPIODATA**, the corresponding bits in the mask, resulting from the address bus bits [9:2], must be High. Otherwise, the bit values remain unchanged by the write.

Similarly, the values read from this register are determined for each bit by the mask bit derived from the address used to access the data register, bits [9:2]. Bits that are 1 in the address mask cause the corresponding bits in **GPIODATA** to be read, and bits that are 0 in the address mask cause the corresponding bits in **GPIODATA** to be read as 0, regardless of their value.

A read from **GPIODATA** returns the last bit value written if the respective pins are configured as outputs, or it returns the value on the corresponding input pin when these are configured as inputs. All bits are cleared by a reset.

GPIO Data (GPIODATA)

GPIO Port A base: 0x4000.4000
GPIO Port B base: 0x4000.5000
GPIO Port C base: 0x4000.6000
GPIO Port D base: 0x4000.7000
GPIO Port E base: 0x4002.4000
GPIO Port F base: 0x4002.5000
GPIO Port G base: 0x4002.6000
Offset 0x000
Type R/W, reset 0x0000.0000

	31	30	29	28	27	26	25	24	23	22	21	20	19	18	17	16
	reserved															
Type	RO	RO	RO	RO	RO	RO	RO	RO	RO	RO	RO	RO	RO	RO	RO	RO
Reset	0	0	0	0	0	0	0	0	0	0	0	0	0	0	0	0

	15	14	13	12	11	10	9	8	7	6	5	4	3	2	1	0
	reserved								DATA							
Type	RO	RO	RO	RO	RO	RO	RO	RO	R/W	R/W	R/W	R/W	R/W	R/W	R/W	R/W
Reset	0	0	0	0	0	0	0	0	0	0	0	0	0	0	0	0

Bit/Field	Name	Type	Reset	Description
31:8	reserved	RO	0x00	Software should not rely on the value of a reserved bit. To provide compatibility with future products, the value of a reserved bit should be preserved across a read-modify-write operation.
7:0	DATA	R/W	0x00	GPIO Data This register is virtually mapped to 256 locations in the address space. To facilitate the reading and writing of data to these registers by independent drivers, the data read from and the data written to the registers are masked by the eight address lines `ipaddr[9:2]`. Reads from this register return its current state. Writes to this register only affect bits that are not masked by `ipaddr[9:2]` and are configured as outputs. See “Data Register Operation” on page 181 for examples of reads and writes.

Register 2: GPIO Direction (GPIODIR), offset 0x400

The **GPIODIR** register is the data direction register. Bits set to 1 in the **GPIODIR** register configure the corresponding pin to be an output, while bits set to 0 configure the pins to be inputs. All bits are cleared by a reset, meaning all GPIO pins are inputs by default.

GPIO Direction (GPIODIR)

GPIO Port A base: 0x4000.4000
GPIO Port B base: 0x4000.5000
GPIO Port C base: 0x4000.6000
GPIO Port D base: 0x4000.7000
GPIO Port E base: 0x4002.4000
GPIO Port F base: 0x4002.5000
GPIO Port G base: 0x4002.6000
Offset 0x400
Type R/W, reset 0x0000.0000

	31	30	29	28	27	26	25	24	23	22	21	20	19	18	17	16
	reserved															
Type	RO	RO	RO	RO	RO	RO	RO	RO	RO	RO	RO	RO	RO	RO	RO	RO
Reset	0	0	0	0	0	0	0	0	0	0	0	0	0	0	0	0

	15	14	13	12	11	10	9	8	7	6	5	4	3	2	1	0
	reserved								DIR							
Type	RO	RO	RO	RO	RO	RO	RO	RO	R/W	R/W	R/W	R/W	R/W	R/W	R/W	R/W
Reset	0	0	0	0	0	0	0	0	0	0	0	0	0	0	0	0

Bit/Field	Name	Type	Reset	Description
31:8	reserved	RO	0x00	Software should not rely on the value of a reserved bit. To provide compatibility with future products, the value of a reserved bit should be preserved across a read-modify-write operation.
7:0	DIR	R/W	0x00	GPIO Data Direction The `DIR` values are defined as follows: Value Description 0 Pins are inputs. 1 Pins are outputs.

Register 3: GPIO Interrupt Sense (GPIOIS), offset 0x404

The **GPIOIS** register is the interrupt sense register. Bits set to 1 in **GPIOIS** configure the corresponding pins to detect levels, while bits set to 0 configure the pins to detect edges. All bits are cleared by a reset.

GPIO Interrupt Sense (GPIOIS)

GPIO Port A base: 0x4000.4000
GPIO Port B base: 0x4000.5000
GPIO Port C base: 0x4000.6000
GPIO Port D base: 0x4000.7000
GPIO Port E base: 0x4002.4000
GPIO Port F base: 0x4002.5000
GPIO Port G base: 0x4002.6000
Offset 0x404
Type R/W, reset 0x0000.0000

	31	30	29	28	27	26	25	24	23	22	21	20	19	18	17	16
	reserved															
Type	RO	RO	RO	RO	RO	RO	RO	RO	RO	RO	RO	RO	RO	RO	RO	RO
Reset	0	0	0	0	0	0	0	0	0	0	0	0	0	0	0	0

	15	14	13	12	11	10	9	8	7	6	5	4	3	2	1	0
	reserved								IS							
Type	RO	RO	RO	RO	RO	RO	RO	RO	R/W	R/W	R/W	R/W	R/W	R/W	R/W	R/W
Reset	0	0	0	0	0	0	0	0	0	0	0	0	0	0	0	0

Bit/Field	Name	Type	Reset	Description
31:8	reserved	RO	0x00	Software should not rely on the value of a reserved bit. To provide compatibility with future products, the value of a reserved bit should be preserved across a read-modify-write operation.
7:0	IS	R/W	0x00	GPIO Interrupt Sense The `IS` values are defined as follows: Value Description 0 Edge on corresponding pin is detected (edge-sensitive). 1 Level on corresponding pin is detected (level-sensitive).

Register 4: GPIO Interrupt Both Edges (GPIOIBE), offset 0x408

The **GPIOIBE** register is the interrupt both-edges register. When the corresponding bit in the **GPIO Interrupt Sense (GPIOIS)** register (see page 190) is set to detect edges, bits set to High in **GPIOIBE** configure the corresponding pin to detect both rising and falling edges, regardless of the corresponding bit in the **GPIO Interrupt Event (GPIOIEV)** register (see page 192). Clearing a bit configures the pin to be controlled by **GPIOIEV**. All bits are cleared by a reset.

GPIO Interrupt Both Edges (GPIOIBE)

GPIO Port A base: 0x4000.4000
GPIO Port B base: 0x4000.5000
GPIO Port C base: 0x4000.6000
GPIO Port D base: 0x4000.7000
GPIO Port E base: 0x4002.4000
GPIO Port F base: 0x4002.5000
GPIO Port G base: 0x4002.6000
Offset 0x408
Type R/W, reset 0x0000.0000

	31	30	29	28	27	26	25	24	23	22	21	20	19	18	17	16
	reserved															
Type	RO	RO	RO	RO	RO	RO	RO	RO	RO	RO	RO	RO	RO	RO	RO	RO
Reset	0	0	0	0	0	0	0	0	0	0	0	0	0	0	0	0

	15	14	13	12	11	10	9	8	7	6	5	4	3	2	1	0
	reserved								IBE							
Type	RO	RO	RO	RO	RO	RO	RO	RO	R/W	R/W	R/W	R/W	R/W	R/W	R/W	R/W
Reset	0	0	0	0	0	0	0	0	0	0	0	0	0	0	0	0

Bit/Field	Name	Type	Reset	Description
31:8	reserved	RO	0x00	Software should not rely on the value of a reserved bit. To provide compatibility with future products, the value of a reserved bit should be preserved across a read-modify-write operation.
7:0	IBE	R/W	0x00	GPIO Interrupt Both Edges The `IBE` values are defined as follows: Value Description 0 Interrupt generation is controlled by the **GPIO Interrupt Event (GPIOIEV)** register (see page 192). 1 Both edges on the corresponding pin trigger an interrupt. **Note:** Single edge is determined by the corresponding bit in **GPIOIEV**.

Register 5: GPIO Interrupt Event (GPIOIEV), offset 0x40C

The **GPIOIEV** register is the interrupt event register. Bits set to High in **GPIOIEV** configure the corresponding pin to detect rising edges or high levels, depending on the corresponding bit value in the **GPIO Interrupt Sense (GPIOIS)** register (see page 190). Clearing a bit configures the pin to detect falling edges or low levels, depending on the corresponding bit value in **GPIOIS**. All bits are cleared by a reset.

GPIO Interrupt Event (GPIOIEV)

GPIO Port A base: 0x4000.4000
GPIO Port B base: 0x4000.5000
GPIO Port C base: 0x4000.6000
GPIO Port D base: 0x4000.7000
GPIO Port E base: 0x4002.4000
GPIO Port F base: 0x4002.5000
GPIO Port G base: 0x4002.6000
Offset 0x40C
Type R/W, reset 0x0000.0000

	31	30	29	28	27	26	25	24	23	22	21	20	19	18	17	16
	reserved															
Type	RO	RO	RO	RO	RO	RO	RO	RO	RO	RO	RO	RO	RO	RO	RO	RO
Reset	0	0	0	0	0	0	0	0	0	0	0	0	0	0	0	0

	15	14	13	12	11	10	9	8	7	6	5	4	3	2	1	0
	reserved								IEV							
Type	RO	RO	RO	RO	RO	RO	RO	RO	R/W	R/W	R/W	R/W	R/W	R/W	R/W	R/W
Reset	0	0	0	0	0	0	0	0	0	0	0	0	0	0	0	0

Bit/Field	Name	Type	Reset	Description
31:8	reserved	RO	0x00	Software should not rely on the value of a reserved bit. To provide compatibility with future products, the value of a reserved bit should be preserved across a read-modify-write operation.
7:0	IEV	R/W	0x00	GPIO Interrupt Event The `IEV` values are defined as follows: Value Description 0 Falling edge or Low levels on corresponding pins trigger interrupts. 1 Rising edge or High levels on corresponding pins trigger interrupts.

Register 6: GPIO Interrupt Mask (GPIOIM), offset 0x410

The **GPIOIM** register is the interrupt mask register. Bits set to High in **GPIOIM** allow the corresponding pins to trigger their individual interrupts and the combined **GPIOINTR** line. Clearing a bit disables interrupt triggering on that pin. All bits are cleared by a reset.

GPIO Interrupt Mask (GPIOIM)

GPIO Port A base: 0x4000.4000
GPIO Port B base: 0x4000.5000
GPIO Port C base: 0x4000.6000
GPIO Port D base: 0x4000.7000
GPIO Port E base: 0x4002.4000
GPIO Port F base: 0x4002.5000
GPIO Port G base: 0x4002.6000
Offset 0x410
Type R/W, reset 0x0000.0000

	31	30	29	28	27	26	25	24	23	22	21	20	19	18	17	16
	reserved															
Type	RO	RO	RO	RO	RO	RO	RO	RO	RO	RO	RO	RO	RO	RO	RO	RO
Reset	0	0	0	0	0	0	0	0	0	0	0	0	0	0	0	0

	15	14	13	12	11	10	9	8	7	6	5	4	3	2	1	0
	reserved								IME							
Type	RO	RO	RO	RO	RO	RO	RO	RO	R/W	R/W	R/W	R/W	R/W	R/W	R/W	R/W
Reset	0	0	0	0	0	0	0	0	0	0	0	0	0	0	0	0

Bit/Field	Name	Type	Reset	Description
31:8	reserved	RO	0x00	Software should not rely on the value of a reserved bit. To provide compatibility with future products, the value of a reserved bit should be preserved across a read-modify-write operation.
7:0	IME	R/W	0x00	GPIO Interrupt Mask Enable The `IME` values are defined as follows: Value Description 0 Corresponding pin interrupt is masked. 1 Corresponding pin interrupt is not masked.

Register 7: GPIO Raw Interrupt Status (GPIORIS), offset 0x414

The **GPIORIS** register is the raw interrupt status register. Bits read High in **GPIORIS** reflect the status of interrupt trigger conditions detected (raw, prior to masking), indicating that all the requirements have been met, before they are finally allowed to trigger by the **GPIO Interrupt Mask (GPIOIM)** register (see page 193). Bits read as zero indicate that corresponding input pins have not initiated an interrupt. All bits are cleared by a reset.

GPIO Raw Interrupt Status (GPIORIS)

GPIO Port A base: 0x4000.4000
GPIO Port B base: 0x4000.5000
GPIO Port C base: 0x4000.6000
GPIO Port D base: 0x4000.7000
GPIO Port E base: 0x4002.4000
GPIO Port F base: 0x4002.5000
GPIO Port G base: 0x4002.6000
Offset 0x414
Type RO, reset 0x0000.0000

	31	30	29	28	27	26	25	24	23	22	21	20	19	18	17	16
	reserved															
Type	RO	RO	RO	RO	RO	RO	RO	RO	RO	RO	RO	RO	RO	RO	RO	RO
Reset	0	0	0	0	0	0	0	0	0	0	0	0	0	0	0	0

	15	14	13	12	11	10	9	8	7	6	5	4	3	2	1	0
	reserved								RIS							
Type	RO	RO	RO	RO	RO	RO	RO	RO	RO	RO	RO	RO	RO	RO	RO	RO
Reset	0	0	0	0	0	0	0	0	0	0	0	0	0	0	0	0

Bit/Field	Name	Type	Reset	Description
31:8	reserved	RO	0x00	Software should not rely on the value of a reserved bit. To provide compatibility with future products, the value of a reserved bit should be preserved across a read-modify-write operation.
7:0	RIS	RO	0x00	GPIO Interrupt Raw Status Reflects the status of interrupt trigger condition detection on pins (raw, prior to masking). The `RIS` values are defined as follows: Value Description 0 Corresponding pin interrupt requirements not met. 1 Corresponding pin interrupt has met requirements.

Register 8: GPIO Masked Interrupt Status (GPIOMIS), offset 0x418

The **GPIOMIS** register is the masked interrupt status register. Bits read High in **GPIOMIS** reflect the status of input lines triggering an interrupt. Bits read as Low indicate that either no interrupt has been generated, or the interrupt is masked.

In addition to providing GPIO functionality, `PB4` can also be used as an external trigger for the ADC. If PB4 is configured as a non-masked interrupt pin (the appropriate bit of `GPIOIM` is set to 1), not only is an interrupt for PortB generated, but an external trigger signal is sent to the ADC. If the **ADC Event Multiplexer Select (ADCEMUX)** register is configured to use the external trigger, an ADC conversion is initiated.

If no other PortB pins are being used to generate interrupts, the ARM Integrated Nested Vectored Interrupt Controller (NVIC) Interrupt Set Enable (SETNA) register can disable the PortB interrupts and the ADC interrupt can be used to read back the converted data. Otherwise, the PortB interrupt handler needs to ignore and clear interrupts on B4, and wait for the ADC interrupt or the ADC interrupt needs to be disabled in the SETNA register and the PortB interrupt handler polls the ADC registers until the conversion is completed.

GPIOMIS is the state of the interrupt after masking.

GPIO Masked Interrupt Status (GPIOMIS)

GPIO Port A base: 0x4000.4000
GPIO Port B base: 0x4000.5000
GPIO Port C base: 0x4000.6000
GPIO Port D base: 0x4000.7000
GPIO Port E base: 0x4002.4000
GPIO Port F base: 0x4002.5000
GPIO Port G base: 0x4002.6000
Offset 0x418
Type RO, reset 0x0000.0000

	31	30	29	28	27	26	25	24	23	22	21	20	19	18	17	16
	reserved															
Type	RO	RO	RO	RO	RO	RO	RO	RO	RO	RO	RO	RO	RO	RO	RO	RO
Reset	0	0	0	0	0	0	0	0	0	0	0	0	0	0	0	0

	15	14	13	12	11	10	9	8	7	6	5	4	3	2	1	0
	reserved								MIS							
Type	RO	RO	RO	RO	RO	RO	RO	RO	RO	RO	RO	RO	RO	RO	RO	RO
Reset	0	0	0	0	0	0	0	0	0	0	0	0	0	0	0	0

Bit/Field	Name	Type	Reset	Description
31:8	reserved	RO	0x00	Software should not rely on the value of a reserved bit. To provide compatibility with future products, the value of a reserved bit should be preserved across a read-modify-write operation.
7:0	MIS	RO	0x00	GPIO Masked Interrupt Status Masked value of interrupt due to corresponding pin. The `MIS` values are defined as follows: Value Description 0 Corresponding GPIO line interrupt not active. 1 Corresponding GPIO line asserting interrupt.

Register 9: GPIO Interrupt Clear (GPIOICR), offset 0x41C

The **GPIOICR** register is the interrupt clear register. Writing a 1 to a bit in this register clears the corresponding interrupt edge detection logic register. Writing a 0 has no effect.

GPIO Interrupt Clear (GPIOICR)

GPIO Port A base: 0x4000.4000
GPIO Port B base: 0x4000.5000
GPIO Port C base: 0x4000.6000
GPIO Port D base: 0x4000.7000
GPIO Port E base: 0x4002.4000
GPIO Port F base: 0x4002.5000
GPIO Port G base: 0x4002.6000
Offset 0x41C
Type W1C, reset 0x0000.0000

	31	30	29	28	27	26	25	24	23	22	21	20	19	18	17	16
	reserved															
Type	RO	RO	RO	RO	RO	RO	RO	RO	RO	RO	RO	RO	RO	RO	RO	RO
Reset	0	0	0	0	0	0	0	0	0	0	0	0	0	0	0	0

	15	14	13	12	11	10	9	8	7	6	5	4	3	2	1	0
	reserved								IC							
Type	RO	RO	RO	RO	RO	RO	RO	RO	W1C	W1C	W1C	W1C	W1C	W1C	W1C	W1C
Reset	0	0	0	0	0	0	0	0	0	0	0	0	0	0	0	0

Bit/Field	Name	Type	Reset	Description
31:8	reserved	RO	0x00	Software should not rely on the value of a reserved bit. To provide compatibility with future products, the value of a reserved bit should be preserved across a read-modify-write operation.
7:0	IC	W1C	0x00	GPIO Interrupt Clear The `IC` values are defined as follows: Value Description 0 Corresponding interrupt is unaffected. 1 Corresponding interrupt is cleared.

Register 10: GPIO Alternate Function Select (GPIOAFSEL), offset 0x420

The **GPIOAFSEL** register is the mode control select register. Writing a 1 to any bit in this register selects the hardware control for the corresponding GPIO line. All bits are cleared by a reset, therefore no GPIO line is set to hardware control by default.

The GPIO commit control registers provide a layer of protection against accidental programming of critical hardware peripherals. Protection is currently provided for the five JTAG/SWD pins (`PB7` and `PC[3:0]`). Writes to protected bits of the **GPIO Alternate Function Select (GPIOAFSEL)** register (see page 197) are not committed to storage unless the **GPIO Lock (GPIOLOCK)** register (see page 207) has been unlocked and the appropriate bits of the **GPIO Commit (GPIOCR)** register (see page 208) have been set to 1.

Important: All GPIO pins are tri-stated by default (**GPIOAFSEL**=0, **GPIODEN**=0, **GPIOPDR**=0, and **GPIOPUR**=0), with the exception of the five JTAG/SWD pins (`PB7` and `PC[3:0]`). The JTAG/SWD pins default to their JTAG/SWD functionality (**GPIOAFSEL**=1, **GPIODEN=1** and **GPIOPUR**=1). A Power-On-Reset ($\overline{\text{POR}}$) or asserting $\overline{\text{RST}}$ puts both groups of pins back to their default state.

Caution – It is possible to create a software sequence that prevents the debugger from connecting to the Stellaris® microcontroller. If the program code loaded into flash immediately changes the JTAG pins to their GPIO functionality, the debugger may not have enough time to connect and halt the controller before the JTAG pin functionality switches. This may lock the debugger out of the part. This can be avoided with a software routine that restores JTAG functionality based on an external or software trigger.

GPIO Alternate Function Select (GPIOAFSEL)

GPIO Port A base: 0x4000.4000
GPIO Port B base: 0x4000.5000
GPIO Port C base: 0x4000.6000
GPIO Port D base: 0x4000.7000
GPIO Port E base: 0x4002.4000
GPIO Port F base: 0x4002.5000
GPIO Port G base: 0x4002.6000
Offset 0x420
Type R/W, reset -

	31	30	29	28	27	26	25	24	23	22	21	20	19	18	17	16
	reserved															
Type	RO	RO	RO	RO	RO	RO	RO	RO	RO	RO	RO	RO	RO	RO	RO	RO
Reset	0	0	0	0	0	0	0	0	0	0	0	0	0	0	0	0

	15	14	13	12	11	10	9	8	7	6	5	4	3	2	1	0
	reserved								AFSEL							
Type	RO	RO	RO	RO	RO	RO	RO	RO	R/W	R/W	R/W	R/W	R/W	R/W	R/W	R/W
Reset	0	0	0	0	0	0	0	0	-	-	-	-	-	-	-	-

Bit/Field	Name	Type	Reset	Description
31:8	reserved	RO	0x00	Software should not rely on the value of a reserved bit. To provide compatibility with future products, the value of a reserved bit should be preserved across a read-modify-write operation.

Bit/Field	Name	Type	Reset	Description
7:0	AFSEL	R/W	-	GPIO Alternate Function Select The AFSEL values are defined as follows: Value Description 0 Software control of corresponding GPIO line (GPIO mode). 1 Hardware control of corresponding GPIO line (alternate hardware function). **Note:** The default reset value for the **GPIOAFSEL**, **GPIOPUR**, and **GPIODEN** registers are 0x0000.0000 for all GPIO pins, with the exception of the five JTAG/SWD pins (PB7 and PC[3:0]). These five pins default to JTAG/SWD functionality. Because of this, the default reset value of these registers for GPIO Port B is 0x0000.0080 while the default reset value for Port C is 0x0000.000F.

Register 11: GPIO 2-mA Drive Select (GPIODR2R), offset 0x500

The **GPIODR2R** register is the 2-mA drive control register. It allows for each GPIO signal in the port to be individually configured without affecting the other pads. When writing a DRV2 bit for a GPIO signal, the corresponding DRV4 bit in the **GPIODR4R** register and the DRV8 bit in the **GPIODR8R** register are automatically cleared by hardware.

GPIO 2-mA Drive Select (GPIODR2R)

GPIO Port A base: 0x4000.4000
GPIO Port B base: 0x4000.5000
GPIO Port C base: 0x4000.6000
GPIO Port D base: 0x4000.7000
GPIO Port E base: 0x4002.4000
GPIO Port F base: 0x4002.5000
GPIO Port G base: 0x4002.6000
Offset 0x500
Type R/W, reset 0x0000.00FF

	31	30	29	28	27	26	25	24	23	22	21	20	19	18	17	16
	reserved															
Type	RO	RO	RO	RO	RO	RO	RO	RO	RO	RO	RO	RO	RO	RO	RO	RO
Reset	0	0	0	0	0	0	0	0	0	0	0	0	0	0	0	0

	15	14	13	12	11	10	9	8	7	6	5	4	3	2	1	0
	reserved								DRV2							
Type	RO	RO	RO	RO	RO	RO	RO	RO	R/W	R/W	R/W	R/W	R/W	R/W	R/W	R/W
Reset	0	0	0	0	0	0	0	0	1	1	1	1	1	1	1	1

Bit/Field	Name	Type	Reset	Description
31:8	reserved	RO	0x00	Software should not rely on the value of a reserved bit. To provide compatibility with future products, the value of a reserved bit should be preserved across a read-modify-write operation.
7:0	DRV2	R/W	0xFF	Output Pad 2-mA Drive Enable A write of 1 to either **GPIODR4[n]** or **GPIODR8[n]** clears the corresponding 2-mA enable bit. The change is effective on the second clock cycle after the write.

Register 12: GPIO 4-mA Drive Select (GPIODR4R), offset 0x504

The **GPIODR4R** register is the 4-mA drive control register. It allows for each GPIO signal in the port to be individually configured without affecting the other pads. When writing the DRV4 bit for a GPIO signal, the corresponding DRV2 bit in the **GPIODR2R** register and the DRV8 bit in the **GPIODR8R** register are automatically cleared by hardware.

GPIO 4-mA Drive Select (GPIODR4R)

GPIO Port A base: 0x4000.4000
GPIO Port B base: 0x4000.5000
GPIO Port C base: 0x4000.6000
GPIO Port D base: 0x4000.7000
GPIO Port E base: 0x4002.4000
GPIO Port F base: 0x4002.5000
GPIO Port G base: 0x4002.6000
Offset 0x504
Type R/W, reset 0x0000.0000

	31	30	29	28	27	26	25	24	23	22	21	20	19	18	17	16
	reserved															
Type	RO	RO	RO	RO	RO	RO	RO	RO	RO	RO	RO	RO	RO	RO	RO	RO
Reset	0	0	0	0	0	0	0	0	0	0	0	0	0	0	0	0

	15	14	13	12	11	10	9	8	7	6	5	4	3	2	1	0
	reserved								DRV4							
Type	RO	RO	RO	RO	RO	RO	RO	RO	R/W	R/W	R/W	R/W	R/W	R/W	R/W	R/W
Reset	0	0	0	0	0	0	0	0	0	0	0	0	0	0	0	0

Bit/Field	Name	Type	Reset	Description
31:8	reserved	RO	0x00	Software should not rely on the value of a reserved bit. To provide compatibility with future products, the value of a reserved bit should be preserved across a read-modify-write operation.
7:0	DRV4	R/W	0x00	Output Pad 4-mA Drive Enable A write of 1 to either **GPIODR2[n]** or **GPIODR8[n]** clears the corresponding 4-mA enable bit. The change is effective on the second clock cycle after the write.

Register 13: GPIO 8-mA Drive Select (GPIODR8R), offset 0x508

The **GPIODR8R** register is the 8-mA drive control register. It allows for each GPIO signal in the port to be individually configured without affecting the other pads. When writing the DRV8 bit for a GPIO signal, the corresponding DRV2 bit in the **GPIODR2R** register and the DRV4 bit in the **GPIODR4R** register are automatically cleared by hardware.

GPIO 8-mA Drive Select (GPIODR8R)

GPIO Port A base: 0x4000.4000
GPIO Port B base: 0x4000.5000
GPIO Port C base: 0x4000.6000
GPIO Port D base: 0x4000.7000
GPIO Port E base: 0x4002.4000
GPIO Port F base: 0x4002.5000
GPIO Port G base: 0x4002.6000
Offset 0x508
Type R/W, reset 0x0000.0000

	31	30	29	28	27	26	25	24	23	22	21	20	19	18	17	16
	reserved															
Type	RO	RO	RO	RO	RO	RO	RO	RO	RO	RO	RO	RO	RO	RO	RO	RO
Reset	0	0	0	0	0	0	0	0	0	0	0	0	0	0	0	0

	15	14	13	12	11	10	9	8	7	6	5	4	3	2	1	0
	reserved								DRV8							
Type	RO	RO	RO	RO	RO	RO	RO	RO	R/W	R/W	R/W	R/W	R/W	R/W	R/W	R/W
Reset	0	0	0	0	0	0	0	0	0	0	0	0	0	0	0	0

Bit/Field	Name	Type	Reset	Description
31:8	reserved	RO	0x00	Software should not rely on the value of a reserved bit. To provide compatibility with future products, the value of a reserved bit should be preserved across a read-modify-write operation.
7:0	DRV8	R/W	0x00	Output Pad 8-mA Drive Enable A write of 1 to either **GPIODR2[n]** or **GPIODR4[n]** clears the corresponding 8-mA enable bit. The change is effective on the second clock cycle after the write.

Register 14: GPIO Open Drain Select (GPIOODR), offset 0x50C

The **GPIOODR** register is the open drain control register. Setting a bit in this register enables the open drain configuration of the corresponding GPIO pad. When open drain mode is enabled, the corresponding bit should also be set in the **GPIO Digital Input Enable (GPIODEN)** register (see page 206). Corresponding bits in the drive strength registers (**GPIODR2R**, **GPIODR4R**, **GPIODR8R**, and **GPIOSLR**) can be set to achieve the desired rise and fall times. The GPIO acts as an open drain input if the corresponding bit in the **GPIODIR** register is set to 0; and as an open drain output when set to 1.

When using the I^2C module, in addition to configuring the pin to open drain, the **GPIO Alternate Function Select (GPIOAFSEL)** register bits for the I^2C clock and data pins should be set to 1 (see examples in “Initialization and Configuration” on page 184).

GPIO Open Drain Select (GPIOODR)

GPIO Port A base: 0x4000.4000
GPIO Port B base: 0x4000.5000
GPIO Port C base: 0x4000.6000
GPIO Port D base: 0x4000.7000
GPIO Port E base: 0x4002.4000
GPIO Port F base: 0x4002.5000
GPIO Port G base: 0x4002.6000
Offset 0x50C
Type R/W, reset 0x0000.0000

	31	30	29	28	27	26	25	24	23	22	21	20	19	18	17	16
	reserved															
Type	RO	RO	RO	RO	RO	RO	RO	RO	RO	RO	RO	RO	RO	RO	RO	RO
Reset	0	0	0	0	0	0	0	0	0	0	0	0	0	0	0	0

	15	14	13	12	11	10	9	8	7	6	5	4	3	2	1	0
	reserved								ODE							
Type	RO	RO	RO	RO	RO	RO	RO	RO	R/W	R/W	R/W	R/W	R/W	R/W	R/W	R/W
Reset	0	0	0	0	0	0	0	0	0	0	0	0	0	0	0	0

Bit/Field	Name	Type	Reset	Description
31:8	reserved	RO	0x00	Software should not rely on the value of a reserved bit. To provide compatibility with future products, the value of a reserved bit should be preserved across a read-modify-write operation.
7:0	ODE	R/W	0x00	Output Pad Open Drain Enable The `ODE` values are defined as follows: Value Description 0 Open drain configuration is disabled. 1 Open drain configuration is enabled.

Register 15: GPIO Pull-Up Select (GPIOPUR), offset 0x510

The **GPIOPUR** register is the pull-up control register. When a bit is set to 1, it enables a weak pull-up resistor on the corresponding GPIO signal. Setting a bit in **GPIOPUR** automatically clears the corresponding bit in the **GPIO Pull-Down Select (GPIOPDR)** register (see page 204).

GPIO Pull-Up Select (GPIOPUR)

GPIO Port A base: 0x4000.4000
GPIO Port B base: 0x4000.5000
GPIO Port C base: 0x4000.6000
GPIO Port D base: 0x4000.7000
GPIO Port E base: 0x4002.4000
GPIO Port F base: 0x4002.5000
GPIO Port G base: 0x4002.6000
Offset 0x510
Type R/W, reset -

	31	30	29	28	27	26	25	24	23	22	21	20	19	18	17	16
	reserved															
Type	RO	RO	RO	RO	RO	RO	RO	RO	RO	RO	RO	RO	RO	RO	RO	RO
Reset	0	0	0	0	0	0	0	0	0	0	0	0	0	0	0	0

	15	14	13	12	11	10	9	8	7	6	5	4	3	2	1	0
	reserved								PUE							
Type	RO	RO	RO	RO	RO	RO	RO	RO	R/W	R/W	R/W	R/W	R/W	R/W	R/W	R/W
Reset	0	0	0	0	0	0	0	0	-	-	-	-	-	-	-	-

Bit/Field	Name	Type	Reset	Description
31:8	reserved	RO	0x00	Software should not rely on the value of a reserved bit. To provide compatibility with future products, the value of a reserved bit should be preserved across a read-modify-write operation.
7:0	PUE	R/W	-	Pad Weak Pull-Up Enable A write of 1 to **GPIOPDR[n]** clears the corresponding **GPIOPUR[n]** enables. The change is effective on the second clock cycle after the write. **Note:** The default reset value for the **GPIOAFSEL**, **GPIOPUR**, and **GPIODEN** registers are 0x0000.0000 for all GPIO pins, with the exception of the five JTAG/SWD pins (`PB7` and `PC[3:0]`). These five pins default to JTAG/SWD functionality. Because of this, the default reset value of these registers for GPIO Port B is 0x0000.0080 while the default reset value for Port C is 0x0000.000F.

Register 16: GPIO Pull-Down Select (GPIOPDR), offset 0x514

The **GPIOPDR** register is the pull-down control register. When a bit is set to 1, it enables a weak pull-down resistor on the corresponding GPIO signal. Setting a bit in **GPIOPDR** automatically clears the corresponding bit in the **GPIO Pull-Up Select (GPIOPUR)** register (see page 203).

GPIO Pull-Down Select (GPIOPDR)

GPIO Port A base: 0x4000.4000
GPIO Port B base: 0x4000.5000
GPIO Port C base: 0x4000.6000
GPIO Port D base: 0x4000.7000
GPIO Port E base: 0x4002.4000
GPIO Port F base: 0x4002.5000
GPIO Port G base: 0x4002.6000
Offset 0x514
Type R/W, reset 0x0000.0000

	31	30	29	28	27	26	25	24	23	22	21	20	19	18	17	16
	reserved															
Type	RO	RO	RO	RO	RO	RO	RO	RO	RO	RO	RO	RO	RO	RO	RO	RO
Reset	0	0	0	0	0	0	0	0	0	0	0	0	0	0	0	0

	15	14	13	12	11	10	9	8	7	6	5	4	3	2	1	0
	reserved								PDE							
Type	RO	RO	RO	RO	RO	RO	RO	RO	R/W	R/W	R/W	R/W	R/W	R/W	R/W	R/W
Reset	0	0	0	0	0	0	0	0	0	0	0	0	0	0	0	0

Bit/Field	Name	Type	Reset	Description
31:8	reserved	RO	0x00	Software should not rely on the value of a reserved bit. To provide compatibility with future products, the value of a reserved bit should be preserved across a read-modify-write operation.
7:0	PDE	R/W	0x00	Pad Weak Pull-Down Enable A write of 1 to **GPIOPUR[n]** clears the corresponding **GPIOPDR[n]** enables. The change is effective on the second clock cycle after the write.

Register 17: GPIO Slew Rate Control Select (GPIOSLR), offset 0x518

The **GPIOSLR** register is the slew rate control register. Slew rate control is only available when using the 8-mA drive strength option via the **GPIO 8-mA Drive Select (GPIODR8R)** register (see page 201).

GPIO Slew Rate Control Select (GPIOSLR)

GPIO Port A base: 0x4000.4000
GPIO Port B base: 0x4000.5000
GPIO Port C base: 0x4000.6000
GPIO Port D base: 0x4000.7000
GPIO Port E base: 0x4002.4000
GPIO Port F base: 0x4002.5000
GPIO Port G base: 0x4002.6000
Offset 0x518
Type R/W, reset 0x0000.0000

	31	30	29	28	27	26	25	24	23	22	21	20	19	18	17	16
	reserved															
Type	RO	RO	RO	RO	RO	RO	RO	RO	RO	RO	RO	RO	RO	RO	RO	RO
Reset	0	0	0	0	0	0	0	0	0	0	0	0	0	0	0	0

	15	14	13	12	11	10	9	8	7	6	5	4	3	2	1	0
	reserved								SRL							
Type	RO	RO	RO	RO	RO	RO	RO	RO	R/W	R/W	R/W	R/W	R/W	R/W	R/W	R/W
Reset	0	0	0	0	0	0	0	0	0	0	0	0	0	0	0	0

Bit/Field	Name	Type	Reset	Description
31:8	reserved	RO	0x00	Software should not rely on the value of a reserved bit. To provide compatibility with future products, the value of a reserved bit should be preserved across a read-modify-write operation.
7:0	SRL	R/W	0x00	Slew Rate Limit Enable (8-mA drive only) The SRL values are defined as follows: Value Description 0 Slew rate control disabled. 1 Slew rate control enabled.

Register 18: GPIO Digital Enable (GPIODEN), offset 0x51C

Note: Pins configured as digital inputs are Schmitt-triggered.

The **GPIODEN** register is the digital enable register. By default, with the exception of the GPIO signals used for JTAG/SWD function, all other GPIO signals are configured out of reset to be undriven (tristate). Their digital function is disabled; they do not drive a logic value on the pin and they do not allow the pin voltage into the GPIO receiver. To use the pin in a digital function (either GPIO or alternate function), the corresponding `GPIODEN` bit must be set.

GPIO Digital Enable (GPIODEN)

GPIO Port A base: 0x4000.4000
GPIO Port B base: 0x4000.5000
GPIO Port C base: 0x4000.6000
GPIO Port D base: 0x4000.7000
GPIO Port E base: 0x4002.4000
GPIO Port F base: 0x4002.5000
GPIO Port G base: 0x4002.6000
Offset 0x51C
Type R/W, reset -

	31	30	29	28	27	26	25	24	23	22	21	20	19	18	17	16
	reserved															
Type	RO	RO	RO	RO	RO	RO	RO	RO	RO	RO	RO	RO	RO	RO	RO	RO
Reset	0	0	0	0	0	0	0	0	0	0	0	0	0	0	0	0

	15	14	13	12	11	10	9	8	7	6	5	4	3	2	1	0
	reserved								DEN							
Type	RO	RO	RO	RO	RO	RO	RO	RO	R/W	R/W	R/W	R/W	R/W	R/W	R/W	R/W
Reset	0	0	0	0	0	0	0	0	-	-	-	-	-	-	-	-

Bit/Field	Name	Type	Reset	Description
31:8	reserved	RO	0x00	Software should not rely on the value of a reserved bit. To provide compatibility with future products, the value of a reserved bit should be preserved across a read-modify-write operation.
7:0	DEN	R/W	-	Digital Enable The `DEN` values are defined as follows: Value Description 0 Digital functions disabled. 1 Digital functions enabled. **Note:** The default reset value for the **GPIOAFSEL**, **GPIOPUR**, and **GPIODEN** registers are 0x0000.0000 for all GPIO pins, with the exception of the five JTAG/SWD pins (`PB7` and `PC[3:0]`). These five pins default to JTAG/SWD functionality. Because of this, the default reset value of these registers for GPIO Port B is 0x0000.0080 while the default reset value for Port C is 0x0000.000F.

Register 19: GPIO Lock (GPIOLOCK), offset 0x520

The **GPIOLOCK** register enables write access to the **GPIOCR** register (see page 208). Writing 0x1ACC.E551 to the **GPIOLOCK** register will unlock the **GPIOCR** register. Writing any other value to the **GPIOLOCK** register re-enables the locked state. Reading the **GPIOLOCK** register returns the lock status rather than the 32-bit value that was previously written. Therefore, when write accesses are disabled, or locked, reading the **GPIOLOCK** register returns 0x00000001. When write accesses are enabled, or unlocked, reading the **GPIOLOCK** register returns 0x00000000.

GPIO Lock (GPIOLOCK)

GPIO Port A base: 0x4000.4000
GPIO Port B base: 0x4000.5000
GPIO Port C base: 0x4000.6000
GPIO Port D base: 0x4000.7000
GPIO Port E base: 0x4002.4000
GPIO Port F base: 0x4002.5000
GPIO Port G base: 0x4002.6000
Offset 0x520
Type R/W, reset 0x0000.0001

	31	30	29	28	27	26	25	24	23	22	21	20	19	18	17	16
	LOCK															
Type	R/W	R/W	R/W	R/W	R/W	R/W	R/W	R/W	R/W	R/W	R/W	R/W	R/W	R/W	R/W	R/W
Reset	0	0	0	0	0	0	0	0	0	0	0	0	0	0	0	0

	15	14	13	12	11	10	9	8	7	6	5	4	3	2	1	0
	LOCK															
Type	R/W	R/W	R/W	R/W	R/W	R/W	R/W	R/W	R/W	R/W	R/W	R/W	R/W	R/W	R/W	R/W
Reset	0	0	0	0	0	0	0	0	0	0	0	0	0	0	0	1

Bit/Field	Name	Type	Reset	Description
31:0	LOCK	R/W	0x0000.0001	GPIO Lock

A write of the value 0x1ACC.E551 unlocks the **GPIO Commit (GPIOCR)** register for write access.

A write of any other value or a write to the **GPIOCR** register reapplies the lock, preventing any register updates. A read of this register returns the following values:

Value	Description
0x0000.0001	locked
0x0000.0000	unlocked

Register 20: GPIO Commit (GPIOCR), offset 0x524

The **GPIOCR** register is the commit register. The value of the **GPIOCR** register determines which bits of the **GPIOAFSEL** register are committed when a write to the **GPIOAFSEL** register is performed. If a bit in the **GPIOCR** register is a zero, the data being written to the corresponding bit in the **GPIOAFSEL** register will not be committed and will retain its previous value. If a bit in the **GPIOCR** register is a one, the data being written to the corresponding bit of the **GPIOAFSEL** register will be committed to the register and will reflect the new value.

The contents of the **GPIOCR** register can only be modified if the **GPIOLOCK** register is unlocked. Writes to the **`GPIOCR`** register are ignored if the **GPIOLOCK** register is locked.

Important: This register is designed to prevent accidental programming of the registers that control connectivity to the JTAG/SWD debug hardware. By initializing the bits of the **GPIOCR** register to 0 for `PB7` and `PC[3:0]`, the JTAG/SWD debug port can only be converted to GPIOs through a deliberate set of writes to the **GPIOLOCK**, **GPIOCR**, and the corresponding registers.

Because this protection is currently only implemented on the JTAG/SWD pins on `PB7` and `PC[3:0]`, all of the other bits in the **GPIOCR** registers cannot be written with 0x0. These bits are hardwired to 0x1, ensuring that it is always possible to commit new values to the **GPIOAFSEL**register bits of these other pins.

GPIO Commit (GPIOCR)

GPIO Port A base: 0x4000.4000
GPIO Port B base: 0x4000.5000
GPIO Port C base: 0x4000.6000
GPIO Port D base: 0x4000.7000
GPIO Port E base: 0x4002.4000
GPIO Port F base: 0x4002.5000
GPIO Port G base: 0x4002.6000
Offset 0x524
Type -, reset -

	31	30	29	28	27	26	25	24	23	22	21	20	19	18	17	16
	reserved															
Type	RO	RO	RO	RO	RO	RO	RO	RO	RO	RO	RO	RO	RO	RO	RO	RO
Reset	0	0	0	0	0	0	0	0	0	0	0	0	0	0	0	0

	15	14	13	12	11	10	9	8	7	6	5	4	3	2	1	0
	reserved								CR							
Type	RO	RO	RO	RO	RO	RO	RO	RO	-	-	-	-	-	-	-	-
Reset	0	0	0	0	0	0	0	0	-	-	-	-	-	-	-	-

Bit/Field	Name	Type	Reset	Description
31:8	reserved	RO	0x00	Software should not rely on the value of a reserved bit. To provide compatibility with future products, the value of a reserved bit should be preserved across a read-modify-write operation.

Bit/Field	Name	Type	Reset	Description
7:0	CR	-	-	GPIO Commit On a bit-wise basis, any bit set allows the corresponding **GPIOAFSEL** bit to be set to its alternate function. **Note:** The default register type for the **GPIOCR** register is RO for all GPIO pins with the exception of the five JTAG/SWD pins (`PB7` and `PC[3:0]`). These five pins are currently the only GPIOs that are protected by the **GPIOCR** register. Because of this, the register type for GPIO Port B7 and GPIO Port C[3:0] is R/W. The default reset value for the **GPIOCR** register is 0x0000.00FF for all GPIO pins, with the exception of the five JTAG/SWD pins (`PB7` and `PC[3:0]`). To ensure that the JTAG port is not accidentally programmed as a GPIO, these five pins default to non-committable. Because of this, the default reset value of **GPIOCR** for GPIO Port B is 0x0000.007F while the default reset value of GPIOCR for Port C is 0x0000.00F0.

Register 21: GPIO Peripheral Identification 4 (GPIOPeriphID4), offset 0xFD0

The **GPIOPeriphID4**, **GPIOPeriphID5**, **GPIOPeriphID6**, and **GPIOPeriphID7** registers can conceptually be treated as one 32-bit register; each register contains eight bits of the 32-bit register, used by software to identify the peripheral.

GPIO Peripheral Identification 4 (GPIOPeriphID4)

GPIO Port A base: 0x4000.4000
GPIO Port B base: 0x4000.5000
GPIO Port C base: 0x4000.6000
GPIO Port D base: 0x4000.7000
GPIO Port E base: 0x4002.4000
GPIO Port F base: 0x4002.5000
GPIO Port G base: 0x4002.6000
Offset 0xFD0
Type RO, reset 0x0000.0000

	31	30	29	28	27	26	25	24	23	22	21	20	19	18	17	16
	reserved															
Type	RO	RO	RO	RO	RO	RO	RO	RO	RO	RO	RO	RO	RO	RO	RO	RO
Reset	0	0	0	0	0	0	0	0	0	0	0	0	0	0	0	0

	15	14	13	12	11	10	9	8	7	6	5	4	3	2	1	0
	reserved								PID4							
Type	RO	RO	RO	RO	RO	RO	RO	RO	RO	RO	RO	RO	RO	RO	RO	RO
Reset	0	0	0	0	0	0	0	0	0	0	0	0	0	0	0	0

Bit/Field	Name	Type	Reset	Description
31:8	reserved	RO	0x00	Software should not rely on the value of a reserved bit. To provide compatibility with future products, the value of a reserved bit should be preserved across a read-modify-write operation.
7:0	PID4	RO	0x00	GPIO Peripheral ID Register[7:0]

Register 22: GPIO Peripheral Identification 5 (GPIOPeriphID5), offset 0xFD4

The **GPIOPeriphID4**, **GPIOPeriphID5**, **GPIOPeriphID6**, and **GPIOPeriphID7** registers can conceptually be treated as one 32-bit register; each register contains eight bits of the 32-bit register, used by software to identify the peripheral.

GPIO Peripheral Identification 5 (GPIOPeriphID5)

GPIO Port A base: 0x4000.4000
GPIO Port B base: 0x4000.5000
GPIO Port C base: 0x4000.6000
GPIO Port D base: 0x4000.7000
GPIO Port E base: 0x4002.4000
GPIO Port F base: 0x4002.5000
GPIO Port G base: 0x4002.6000
Offset 0xFD4
Type RO, reset 0x0000.0000

	31	30	29	28	27	26	25	24	23	22	21	20	19	18	17	16
	reserved															
Type	RO	RO	RO	RO	RO	RO	RO	RO	RO	RO	RO	RO	RO	RO	RO	RO
Reset	0	0	0	0	0	0	0	0	0	0	0	0	0	0	0	0

	15	14	13	12	11	10	9	8	7	6	5	4	3	2	1	0
	reserved								PID5							
Type	RO	RO	RO	RO	RO	RO	RO	RO	RO	RO	RO	RO	RO	RO	RO	RO
Reset	0	0	0	0	0	0	0	0	0	0	0	0	0	0	0	0

Bit/Field	Name	Type	Reset	Description
31:8	reserved	RO	0x00	Software should not rely on the value of a reserved bit. To provide compatibility with future products, the value of a reserved bit should be preserved across a read-modify-write operation.
7:0	PID5	RO	0x00	GPIO Peripheral ID Register[15:8]

Register 23: GPIO Peripheral Identification 6 (GPIOPeriphID6), offset 0xFD8

The **GPIOPeriphID4**, **GPIOPeriphID5**, **GPIOPeriphID6**, and **GPIOPeriphID7** registers can conceptually be treated as one 32-bit register; each register contains eight bits of the 32-bit register, used by software to identify the peripheral.

GPIO Peripheral Identification 6 (GPIOPeriphID6)

GPIO Port A base: 0x4000.4000
GPIO Port B base: 0x4000.5000
GPIO Port C base: 0x4000.6000
GPIO Port D base: 0x4000.7000
GPIO Port E base: 0x4002.4000
GPIO Port F base: 0x4002.5000
GPIO Port G base: 0x4002.6000
Offset 0xFD8
Type RO, reset 0x0000.0000

	31	30	29	28	27	26	25	24	23	22	21	20	19	18	17	16
	reserved															
Type	RO	RO	RO	RO	RO	RO	RO	RO	RO	RO	RO	RO	RO	RO	RO	RO
Reset	0	0	0	0	0	0	0	0	0	0	0	0	0	0	0	0

	15	14	13	12	11	10	9	8	7	6	5	4	3	2	1	0
	reserved								PID6							
Type	RO	RO	RO	RO	RO	RO	RO	RO	RO	RO	RO	RO	RO	RO	RO	RO
Reset	0	0	0	0	0	0	0	0	0	0	0	0	0	0	0	0

Bit/Field	Name	Type	Reset	Description
31:8	reserved	RO	0x00	Software should not rely on the value of a reserved bit. To provide compatibility with future products, the value of a reserved bit should be preserved across a read-modify-write operation.
7:0	PID6	RO	0x00	GPIO Peripheral ID Register[23:16]

Register 24: GPIO Peripheral Identification 7 (GPIOPeriphID7), offset 0xFDC

The **GPIOPeriphID4**, **GPIOPeriphID5**, **GPIOPeriphID6**, and **GPIOPeriphID7** registers can conceptually be treated as one 32-bit register; each register contains eight bits of the 32-bit register, used by software to identify the peripheral.

GPIO Peripheral Identification 7 (GPIOPeriphID7)

GPIO Port A base: 0x4000.4000
GPIO Port B base: 0x4000.5000
GPIO Port C base: 0x4000.6000
GPIO Port D base: 0x4000.7000
GPIO Port E base: 0x4002.4000
GPIO Port F base: 0x4002.5000
GPIO Port G base: 0x4002.6000
Offset 0xFDC
Type RO, reset 0x0000.0000

	31	30	29	28	27	26	25	24	23	22	21	20	19	18	17	16
	reserved															
Type	RO	RO	RO	RO	RO	RO	RO	RO	RO	RO	RO	RO	RO	RO	RO	RO
Reset	0	0	0	0	0	0	0	0	0	0	0	0	0	0	0	0

	15	14	13	12	11	10	9	8	7	6	5	4	3	2	1	0
	reserved								PID7							
Type	RO	RO	RO	RO	RO	RO	RO	RO	RO	RO	RO	RO	RO	RO	RO	RO
Reset	0	0	0	0	0	0	0	0	0	0	0	0	0	0	0	0

Bit/Field	Name	Type	Reset	Description
31:8	reserved	RO	0x00	Software should not rely on the value of a reserved bit. To provide compatibility with future products, the value of a reserved bit should be preserved across a read-modify-write operation.
7:0	PID7	RO	0x00	GPIO Peripheral ID Register[31:24]

Register 25: GPIO Peripheral Identification 0 (GPIOPeriphID0), offset 0xFE0

The **GPIOPeriphID0**, **GPIOPeriphID1**, **GPIOPeriphID2**, and **GPIOPeriphID3** registers can conceptually be treated as one 32-bit register; each register contains eight bits of the 32-bit register, used by software to identify the peripheral.

GPIO Peripheral Identification 0 (GPIOPeriphID0)

GPIO Port A base: 0x4000.4000
GPIO Port B base: 0x4000.5000
GPIO Port C base: 0x4000.6000
GPIO Port D base: 0x4000.7000
GPIO Port E base: 0x4002.4000
GPIO Port F base: 0x4002.5000
GPIO Port G base: 0x4002.6000
Offset 0xFE0
Type RO, reset 0x0000.0061

	31	30	29	28	27	26	25	24	23	22	21	20	19	18	17	16
	reserved															
Type	RO	RO	RO	RO	RO	RO	RO	RO	RO	RO	RO	RO	RO	RO	RO	RO
Reset	0	0	0	0	0	0	0	0	0	0	0	0	0	0	0	0

	15	14	13	12	11	10	9	8	7	6	5	4	3	2	1	0
	reserved								PID0							
Type	RO	RO	RO	RO	RO	RO	RO	RO	RO	RO	RO	RO	RO	RO	RO	RO
Reset	0	0	0	0	0	0	0	0	0	1	1	0	0	0	0	1

Bit/Field	Name	Type	Reset	Description
31:8	reserved	RO	0x00	Software should not rely on the value of a reserved bit. To provide compatibility with future products, the value of a reserved bit should be preserved across a read-modify-write operation.
7:0	PID0	RO	0x61	GPIO Peripheral ID Register[7:0] Can be used by software to identify the presence of this peripheral.

Register 26: GPIO Peripheral Identification 1 (GPIOPeriphID1), offset 0xFE4

The **GPIOPeriphID0**, **GPIOPeriphID1**, **GPIOPeriphID2**, and **GPIOPeriphID3** registers can conceptually be treated as one 32-bit register; each register contains eight bits of the 32-bit register, used by software to identify the peripheral.

GPIO Peripheral Identification 1 (GPIOPeriphID1)

GPIO Port A base: 0x4000.4000
GPIO Port B base: 0x4000.5000
GPIO Port C base: 0x4000.6000
GPIO Port D base: 0x4000.7000
GPIO Port E base: 0x4002.4000
GPIO Port F base: 0x4002.5000
GPIO Port G base: 0x4002.6000
Offset 0xFE4
Type RO, reset 0x0000.0000

	31	30	29	28	27	26	25	24	23	22	21	20	19	18	17	16
	reserved															
Type	RO	RO	RO	RO	RO	RO	RO	RO	RO	RO	RO	RO	RO	RO	RO	RO
Reset	0	0	0	0	0	0	0	0	0	0	0	0	0	0	0	0

	15	14	13	12	11	10	9	8	7	6	5	4	3	2	1	0
	reserved								PID1							
Type	RO	RO	RO	RO	RO	RO	RO	RO	RO	RO	RO	RO	RO	RO	RO	RO
Reset	0	0	0	0	0	0	0	0	0	0	0	0	0	0	0	0

Bit/Field	Name	Type	Reset	Description
31:8	reserved	RO	0x00	Software should not rely on the value of a reserved bit. To provide compatibility with future products, the value of a reserved bit should be preserved across a read-modify-write operation.
7:0	PID1	RO	0x00	GPIO Peripheral ID Register[15:8] Can be used by software to identify the presence of this peripheral.

Register 27: GPIO Peripheral Identification 2 (GPIOPeriphID2), offset 0xFE8

The **GPIOPeriphID0**, **GPIOPeriphID1**, **GPIOPeriphID2**, and **GPIOPeriphID3** registers can conceptually be treated as one 32-bit register; each register contains eight bits of the 32-bit register, used by software to identify the peripheral.

GPIO Peripheral Identification 2 (GPIOPeriphID2)

GPIO Port A base: 0x4000.4000
GPIO Port B base: 0x4000.5000
GPIO Port C base: 0x4000.6000
GPIO Port D base: 0x4000.7000
GPIO Port E base: 0x4002.4000
GPIO Port F base: 0x4002.5000
GPIO Port G base: 0x4002.6000
Offset 0xFE8
Type RO, reset 0x0000.0018

	31	30	29	28	27	26	25	24	23	22	21	20	19	18	17	16
	reserved															
Type	RO	RO	RO	RO	RO	RO	RO	RO	RO	RO	RO	RO	RO	RO	RO	RO
Reset	0	0	0	0	0	0	0	0	0	0	0	0	0	0	0	0

	15	14	13	12	11	10	9	8	7	6	5	4	3	2	1	0
	reserved								PID2							
Type	RO	RO	RO	RO	RO	RO	RO	RO	RO	RO	RO	RO	RO	RO	RO	RO
Reset	0	0	0	0	0	0	0	0	0	0	0	1	1	0	0	0

Bit/Field	Name	Type	Reset	Description
31:8	reserved	RO	0x00	Software should not rely on the value of a reserved bit. To provide compatibility with future products, the value of a reserved bit should be preserved across a read-modify-write operation.
7:0	PID2	RO	0x18	GPIO Peripheral ID Register[23:16] Can be used by software to identify the presence of this peripheral.

Register 28: GPIO Peripheral Identification 3 (GPIOPeriphID3), offset 0xFEC

The **GPIOPeriphID0**, **GPIOPeriphID1**, **GPIOPeriphID2**, and **GPIOPeriphID3** registers can conceptually be treated as one 32-bit register; each register contains eight bits of the 32-bit register, used by software to identify the peripheral.

GPIO Peripheral Identification 3 (GPIOPeriphID3)

GPIO Port A base: 0x4000.4000
GPIO Port B base: 0x4000.5000
GPIO Port C base: 0x4000.6000
GPIO Port D base: 0x4000.7000
GPIO Port E base: 0x4002.4000
GPIO Port F base: 0x4002.5000
GPIO Port G base: 0x4002.6000
Offset 0xFEC
Type RO, reset 0x0000.0001

	31	30	29	28	27	26	25	24	23	22	21	20	19	18	17	16
	reserved															
Type	RO	RO	RO	RO	RO	RO	RO	RO	RO	RO	RO	RO	RO	RO	RO	RO
Reset	0	0	0	0	0	0	0	0	0	0	0	0	0	0	0	0

	15	14	13	12	11	10	9	8	7	6	5	4	3	2	1	0
	reserved								PID3							
Type	RO	RO	RO	RO	RO	RO	RO	RO	RO	RO	RO	RO	RO	RO	RO	RO
Reset	0	0	0	0	0	0	0	0	0	0	0	0	0	0	0	1

Bit/Field	Name	Type	Reset	Description
31:8	reserved	RO	0x00	Software should not rely on the value of a reserved bit. To provide compatibility with future products, the value of a reserved bit should be preserved across a read-modify-write operation.
7:0	PID3	RO	0x01	GPIO Peripheral ID Register[31:24] Can be used by software to identify the presence of this peripheral.

Register 29: GPIO PrimeCell Identification 0 (GPIOPCellID0), offset 0xFF0

The **GPIOPCellID0**, **GPIOPCellID1**, **GPIOPCellID2**, and **GPIOPCellID3** registers are four 8-bit wide registers, that can conceptually be treated as one 32-bit register. The register is used as a standard cross-peripheral identification system.

GPIO PrimeCell Identification 0 (GPIOPCellID0)

GPIO Port A base: 0x4000.4000
GPIO Port B base: 0x4000.5000
GPIO Port C base: 0x4000.6000
GPIO Port D base: 0x4000.7000
GPIO Port E base: 0x4002.4000
GPIO Port F base: 0x4002.5000
GPIO Port G base: 0x4002.6000
Offset 0xFF0
Type RO, reset 0x0000.000D

	31	30	29	28	27	26	25	24	23	22	21	20	19	18	17	16
	reserved															
Type	RO	RO	RO	RO	RO	RO	RO	RO	RO	RO	RO	RO	RO	RO	RO	RO
Reset	0	0	0	0	0	0	0	0	0	0	0	0	0	0	0	0

	15	14	13	12	11	10	9	8	7	6	5	4	3	2	1	0
	reserved								CID0							
Type	RO	RO	RO	RO	RO	RO	RO	RO	RO	RO	RO	RO	RO	RO	RO	RO
Reset	0	0	0	0	0	0	0	0	0	0	0	0	1	1	0	1

Bit/Field	Name	Type	Reset	Description
31:8	reserved	RO	0x00	Software should not rely on the value of a reserved bit. To provide compatibility with future products, the value of a reserved bit should be preserved across a read-modify-write operation.
7:0	CID0	RO	0x0D	GPIO PrimeCell ID Register[7:0] Provides software a standard cross-peripheral identification system.

Register 30: GPIO PrimeCell Identification 1 (GPIOPCellID1), offset 0xFF4

The **GPIOPCellID0**, **GPIOPCellID1**, **GPIOPCellID2**, and **GPIOPCellID3** registers are four 8-bit wide registers, that can conceptually be treated as one 32-bit register. The register is used as a standard cross-peripheral identification system.

GPIO PrimeCell Identification 1 (GPIOPCellID1)

GPIO Port A base: 0x4000.4000
GPIO Port B base: 0x4000.5000
GPIO Port C base: 0x4000.6000
GPIO Port D base: 0x4000.7000
GPIO Port E base: 0x4002.4000
GPIO Port F base: 0x4002.5000
GPIO Port G base: 0x4002.6000
Offset 0xFF4
Type RO, reset 0x0000.00F0

	31	30	29	28	27	26	25	24	23	22	21	20	19	18	17	16
	reserved															
Type	RO	RO	RO	RO	RO	RO	RO	RO	RO	RO	RO	RO	RO	RO	RO	RO
Reset	0	0	0	0	0	0	0	0	0	0	0	0	0	0	0	0

	15	14	13	12	11	10	9	8	7	6	5	4	3	2	1	0
	reserved								CID1							
Type	RO	RO	RO	RO	RO	RO	RO	RO	RO	RO	RO	RO	RO	RO	RO	RO
Reset	0	0	0	0	0	0	0	0	1	1	1	1	0	0	0	0

Bit/Field	Name	Type	Reset	Description
31:8	reserved	RO	0x00	Software should not rely on the value of a reserved bit. To provide compatibility with future products, the value of a reserved bit should be preserved across a read-modify-write operation.
7:0	CID1	RO	0xF0	GPIO PrimeCell ID Register[15:8] Provides software a standard cross-peripheral identification system.

Register 31: GPIO PrimeCell Identification 2 (GPIOPCellID2), offset 0xFF8

The **GPIOPCellID0**, **GPIOPCellID1**, **GPIOPCellID2**, and **GPIOPCellID3** registers are four 8-bit wide registers, that can conceptually be treated as one 32-bit register. The register is used as a standard cross-peripheral identification system.

GPIO PrimeCell Identification 2 (GPIOPCellID2)

GPIO Port A base: 0x4000.4000
GPIO Port B base: 0x4000.5000
GPIO Port C base: 0x4000.6000
GPIO Port D base: 0x4000.7000
GPIO Port E base: 0x4002.4000
GPIO Port F base: 0x4002.5000
GPIO Port G base: 0x4002.6000
Offset 0xFF8
Type RO, reset 0x0000.0005

	31	30	29	28	27	26	25	24	23	22	21	20	19	18	17	16
	reserved															
Type	RO	RO	RO	RO	RO	RO	RO	RO	RO	RO	RO	RO	RO	RO	RO	RO
Reset	0	0	0	0	0	0	0	0	0	0	0	0	0	0	0	0

	15	14	13	12	11	10	9	8	7	6	5	4	3	2	1	0
	reserved								CID2							
Type	RO	RO	RO	RO	RO	RO	RO	RO	RO	RO	RO	RO	RO	RO	RO	RO
Reset	0	0	0	0	0	0	0	0	0	0	0	0	0	1	0	1

Bit/Field	Name	Type	Reset	Description
31:8	reserved	RO	0x00	Software should not rely on the value of a reserved bit. To provide compatibility with future products, the value of a reserved bit should be preserved across a read-modify-write operation.
7:0	CID2	RO	0x05	GPIO PrimeCell ID Register[23:16] Provides software a standard cross-peripheral identification system.

Register 32: GPIO PrimeCell Identification 3 (GPIOPCellID3), offset 0xFFC

The **GPIOPCellID0**, **GPIOPCellID1**, **GPIOPCellID2**, and **GPIOPCellID3** registers are four 8-bit wide registers, that can conceptually be treated as one 32-bit register. The register is used as a standard cross-peripheral identification system.

GPIO PrimeCell Identification 3 (GPIOPCellID3)

GPIO Port A base: 0x4000.4000
GPIO Port B base: 0x4000.5000
GPIO Port C base: 0x4000.6000
GPIO Port D base: 0x4000.7000
GPIO Port E base: 0x4002.4000
GPIO Port F base: 0x4002.5000
GPIO Port G base: 0x4002.6000
Offset 0xFFC
Type RO, reset 0x0000.00B1

	31	30	29	28	27	26	25	24	23	22	21	20	19	18	17	16
	reserved															
Type	RO	RO	RO	RO	RO	RO	RO	RO	RO	RO	RO	RO	RO	RO	RO	RO
Reset	0	0	0	0	0	0	0	0	0	0	0	0	0	0	0	0

	15	14	13	12	11	10	9	8	7	6	5	4	3	2	1	0
	reserved								CID3							
Type	RO	RO	RO	RO	RO	RO	RO	RO	RO	RO	RO	RO	RO	RO	RO	RO
Reset	0	0	0	0	0	0	0	0	1	0	1	1	0	0	0	1

Bit/Field	Name	Type	Reset	Description
31:8	reserved	RO	0x00	Software should not rely on the value of a reserved bit. To provide compatibility with future products, the value of a reserved bit should be preserved across a read-modify-write operation.
7:0	CID3	RO	0xB1	GPIO PrimeCell ID Register[31:24] Provides software a standard cross-peripheral identification system.

10 General-Purpose Timers

Programmable timers can be used to count or time external events that drive the Timer input pins. The Stellaris® General-Purpose Timer Module (GPTM) contains four GPTM blocks (Timer0, Timer1, Timer 2, and Timer 3). Each GPTM block provides two 16-bit timers/counters (referred to as TimerA and TimerB) that can be configured to operate independently as timers or event counters, or configured to operate as one 32-bit timer or one 32-bit Real-Time Clock (RTC).

In addition, timers can be used to trigger analog-to-digital conversions (ADC). The ADC trigger signals from all of the general-purpose timers are ORed together before reaching the ADC module, so only one timer should be used to trigger ADC events.

The GPT Module is one timing resource available on the Stellaris® microcontrollers. Other timer resources include the System Timer (SysTick) (see "System Timer (SysTick)" on page 50) and the PWM timer in the PWM module (see "PWM Timer" on page 539).

The General-Purpose Timers provide the following features:

- Four General-Purpose Timer Modules (GPTM), each of which provides two 16-bit timers. Each GPTM can be configured to operate independently:
  - As a single 32-bit timer
  - As one 32-bit Real-Time Clock (RTC) to event capture
  - For Pulse Width Modulation (PWM)
  - To trigger analog-to-digital conversions
- 32-bit Timer modes
  - Programmable one-shot timer
  - Programmable periodic timer
  - Real-Time Clock when using an external 32.768-KHz clock as the input
  - Software-controlled event stalling (excluding RTC mode)
  - ADC event trigger
- 16-bit Timer modes
  - General-purpose timer function with an 8-bit prescaler (for one-shot and periodic modes only)
  - Programmable one-shot timer
  - Programmable periodic timer
  - User-enabled stalling when the controller asserts CPU Halt flag during debug
  - ADC event trigger
- 16-bit Input Capture modes
  - Input edge count capture

- Input edge time capture

- 16-bit PWM mode
  - Simple PWM mode with software-programmable output inversion of the PWM signal

10.1 Block Diagram

Note: In Figure 10-1 on page 223, the specific CCP pins available depend on the Stellaris® device. See Table 10-1 on page 223 for the available CCPs.

Figure 10-1. GPTM Module Block Diagram

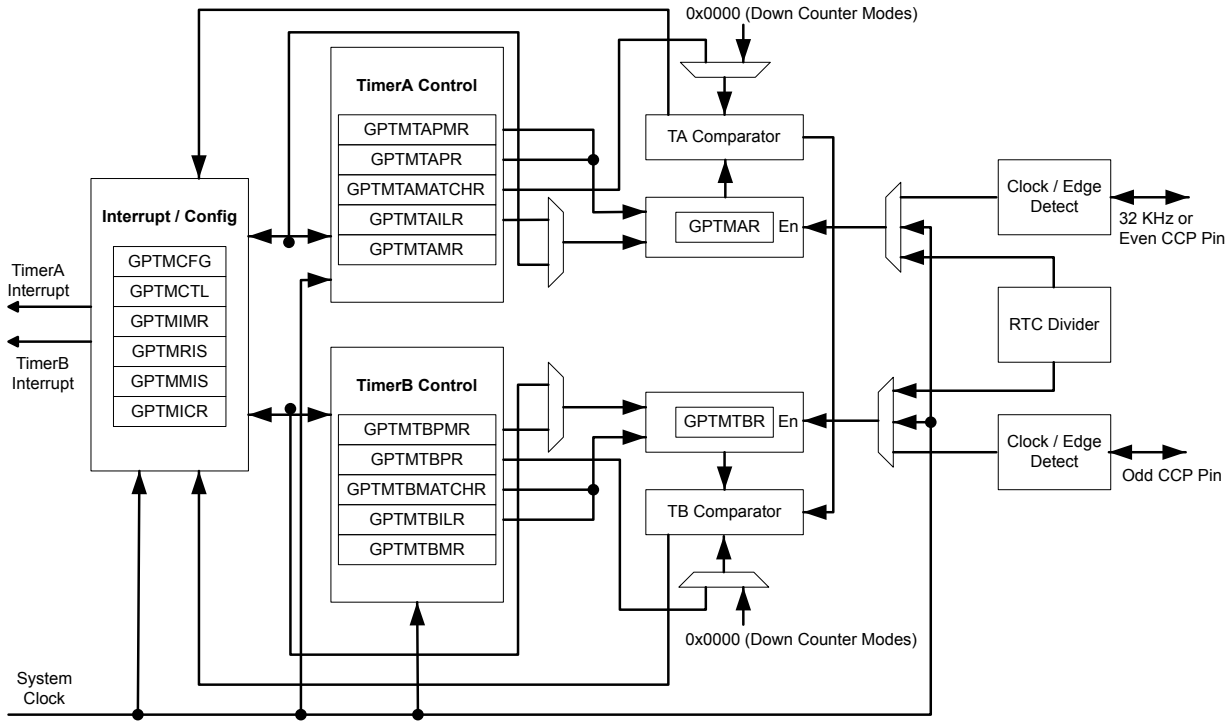

Table 10-1. Available CCP Pins

Timer	16-Bit Up/Down Counter	Even CCP Pin	Odd CCP Pin
Timer 0	TimerA	CCP0	-
	TimerB	-	CCP1
Timer 1	TimerA	-	-
	TimerB	-	-
Timer 2	TimerA	-	-
	TimerB	-	-
Timer 3	TimerA	-	-
	TimerB	-	-

10.2 Functional Description

The main components of each GPTM block are two free-running 16-bit up/down counters (referred to as TimerA and TimerB), two 16-bit match registers, two prescaler match registers, and two 16-bit load/initialization registers and their associated control functions. The exact functionality of each GPTM is controlled by software and configured through the register interface.

Software configures the GPTM using the **GPTM Configuration (GPTMCFG)** register (see page 234), the **GPTM TimerA Mode (GPTMTAMR)** register (see page 235), and the **GPTM TimerB Mode (GPTMTBMR)** register (see page 237). When in one of the 32-bit modes, the timer can only act as a 32-bit timer. However, when configured in 16-bit mode, the GPTM can have its two 16-bit timers configured in any combination of the 16-bit modes.

10.2.1 GPTM Reset Conditions

After reset has been applied to the GPTM module, the module is in an inactive state, and all control registers are cleared and in their default states. Counters TimerA and TimerB are initialized to 0xFFFF, along with their corresponding load registers: the **GPTM TimerA Interval Load (GPTMTAILR)** register (see page 248) and the **GPTM TimerB Interval Load (GPTMTBILR)** register (see page 249). The prescale counters are initialized to 0x00: the **GPTM TimerA Prescale (GPTMTAPR)** register (see page 252) and the **GPTM TimerB Prescale (GPTMTBPR)** register (see page 253).

10.2.2 32-Bit Timer Operating Modes

This section describes the three GPTM 32-bit timer modes (One-Shot, Periodic, and RTC) and their configuration.

The GPTM is placed into 32-bit mode by writing a 0 (One-Shot/Periodic 32-bit timer mode) or a 1 (RTC mode) to the **GPTM Configuration (GPTMCFG)** register. In both configurations, certain GPTM registers are concatenated to form pseudo 32-bit registers. These registers include:

- **GPTM TimerA Interval Load (GPTMTAILR)** register [15:0], see page 248
- **GPTM TimerB Interval Load (GPTMTBILR)** register [15:0], see page 249
- **GPTM TimerA (GPTMTAR)** register [15:0], see page 256
- **GPTM TimerB (GPTMTBR)** register [15:0], see page 257

In the 32-bit modes, the GPTM translates a 32-bit write access to **GPTMTAILR** into a write access to both **GPTMTAILR** and **GPTMTBILR**. The resulting word ordering for such a write operation is:

```
GPTMTBILR[15:0]:GPTMTAILR[15:0]
```

Likewise, a read access to **GPTMTAR** returns the value:

```
GPTMTBR[15:0]:GPTMTAR[15:0]
```

10.2.2.1 32-Bit One-Shot/Periodic Timer Mode

In 32-bit one-shot and periodic timer modes, the concatenated versions of the TimerA and TimerB registers are configured as a 32-bit down-counter. The selection of one-shot or periodic mode is determined by the value written to the `TAMR` field of the **GPTM TimerA Mode (GPTMTAMR)** register (see page 235), and there is no need to write to the **GPTM TimerB Mode (GPTMTBMR)** register.

When software writes the TAEN bit in the **GPTM Control (GPTMCTL)** register (see page 239), the timer begins counting down from its preloaded value. Once the 0x0000.0000 state is reached, the timer reloads its start value from the concatenated **GPTMTAILR** on the next cycle. If configured to be a one-shot timer, the timer stops counting and clears the TAEN bit in the **GPTMCTL** register. If configured as a periodic timer, it continues counting.

In addition to reloading the count value, the GPTM generates interrupts and triggers when it reaches the 0x000.0000 state. The GPTM sets the TATORIS bit in the **GPTM Raw Interrupt Status (GPTMRIS)** register (see page 244), and holds it until it is cleared by writing the **GPTM Interrupt Clear (GPTMICR)** register (see page 246). If the time-out interrupt is enabled in the **GPTM Interrupt Mask (GPTIMR)** register (see page 242), the GPTM also sets the TATOMIS bit in the **GPTM Masked Interrupt Status (GPTMMIS)** register (see page 245). The ADC trigger is enabled by setting the TAOTE bit in **GPTMCTL**.

If software reloads the **GPTMTAILR** register while the counter is running, the counter loads the new value on the next clock cycle and continues counting from the new value.

If the TASTALL bit in the **GPTMCTL** register is asserted, the timer freezes counting until the signal is deasserted.

10.2.2.2 32-Bit Real-Time Clock Timer Mode

In Real-Time Clock (RTC) mode, the concatenated versions of the TimerA and TimerB registers are configured as a 32-bit up-counter. When RTC mode is selected for the first time, the counter is loaded with a value of 0x0000.0001. All subsequent load values must be written to the **GPTM TimerA Match (GPTMTAMATCHR)** register (see page 250) by the controller.

The input clock on the CCP0, CCP2, or CCP4 pins is required to be 32.768 KHz in RTC mode. The clock signal is then divided down to a 1 Hz rate and is passed along to the input of the 32-bit counter.

When software writes the TAEN bit inthe **GPTMCTL** register, the counter starts counting up from its preloaded value of 0x0000.0001. When the current count value matches the preloaded value in the **GPTMTAMATCHR** register, it rolls over to a value of 0x0000.0000 and continues counting until either a hardware reset, or it is disabled by software (clearing the TAEN bit). When a match occurs, the GPTM asserts the RTCRIS bit in **GPTMRIS**. If the RTC interrupt is enabled in **GPTIMR**, the GPTM also sets the RTCMIS bit in **GPTMISR** and generates a controller interrupt. The status flags are cleared by writing the RTCCINT bit in **GPTMICR**.

If the TASTALL and/or TBSTALL bits in the **GPTMCTL** register are set, the timer does not freeze if the RTCEN bit is set in **GPTMCTL**.

10.2.3 16-Bit Timer Operating Modes

The GPTM is placed into global 16-bit mode by writing a value of 0x4 to the **GPTM Configuration (GPTMCFG)** register (see page 234). This section describes each of the GPTM 16-bit modes of operation. TimerA and TimerB have identical modes, so a single description is given using an **n** to reference both.

10.2.3.1 16-Bit One-Shot/Periodic Timer Mode

In 16-bit one-shot and periodic timer modes, the timer is configured as a 16-bit down-counter with an optional 8-bit prescaler that effectively extends the counting range of the timer to 24 bits. The selection of one-shot or periodic mode is determined by the value written to the TnMR field of the **GPTMTnMR** register. The optional prescaler is loaded into the **GPTM Timern Prescale (GPTMTnPR)** register.

When software writes the TnEN bit in the **GPTMCTL** register, the timer begins counting down from its preloaded value. Once the 0x0000 state is reached, the timer reloads its start value from **GPTMTnILR** and **GPTMTnPR** on the next cycle. If configured to be a one-shot timer, the timer stops counting and clears the TnEN bit in the **GPTMCTL** register. If configured as a periodic timer, it continues counting.

In addition to reloading the count value, the timer generates interrupts and triggers when it reaches the 0x0000 state. The GPTM sets the TnTORIS bit in the **GPTMRIS** register, and holds it until it is cleared by writing the **GPTMICR** register. If the time-out interrupt is enabled in **GPTIMR**, the GPTM also sets the TnTOMIS bit in **GPTMISR** and generates a controller interrupt. The ADC trigger is enabled by setting the TnOTE bit in the **GPTMCTL** register.

If software reloads the **GPTMTAILR** register while the counter is running, the counter loads the new value on the next clock cycle and continues counting from the new value.

If the TnSTALL bit in the **GPTMCTL** register is enabled, the timer freezes counting until the signal is deasserted.

The following example shows a variety of configurations for a 16-bit free running timer while using the prescaler. All values assume a 50-MHz clock with Tc=20 ns (clock period).

Table 10-2. 16-Bit Timer With Prescaler Configurations

Prescale	#Clock (T c)[a]	Max Time	Units
00000000	1	1.3107	mS
00000001	2	2.6214	mS
00000010	3	3.9321	mS
----------	--	--	--
11111100	254	332.9229	mS
11111110	255	334.2336	mS
11111111	256	335.5443	mS

a. Tc is the clock period.

10.2.3.2 16-Bit Input Edge Count Mode

Note: For rising-edge detection, the input signal must be High for at least two system clock periods following the rising edge. Similarly, for falling-edge detection, the input signal must be Low for at least two system clock periods following the falling edge. Based on this criteria, the maximum input frequency for edge detection is 1/4 of the system frequency.

Note: The prescaler is not available in 16-Bit Input Edge Count mode.

In Edge Count mode, the timer is configured as a down-counter capable of capturing three types of events: rising edge, falling edge, or both. To place the timer in Edge Count mode, the TnCMR bit of the **GPTMTnMR** register must be set to 0. The type of edge that the timer counts is determined by the TnEVENT fields of the **GPTMCTL** register. During initialization, the **GPTM Timern Match (GPTMTnMATCHR)** register is configured so that the difference between the value in the **GPTMTnILR** register and the **GPTMTnMATCHR** register equals the number of edge events that must be counted.

When software writes the TnEN bit in the **GPTM Control (GPTMCTL)** register, the timer is enabled for event capture. Each input event on the CCP pin decrements the counter by 1 until the event count matches **GPTMTnMATCHR**. When the counts match, the GPTM asserts the CnMRIS bit in the **GPTMRIS** register (and the CnMMIS bit, if the interrupt is not masked).

The counter is then reloaded using the value in **GPTMTnILR**, and stopped since the GPTM automatically clears the TnEN bit in the **GPTMCTL** register. Once the event count has been reached, all further events are ignored until TnEN is re-enabled by software.

Figure 10-2 on page 227 shows how input edge count mode works. In this case, the timer start value is set to **GPTMnILR** =0x000A and the match value is set to **GPTMnMATCHR** =0x0006 so that four edge events are counted. The counter is configured to detect both edges of the input signal.

Note that the last two edges are not counted since the timer automatically clears the TnEN bit after the current count matches the value in the **GPTMnMR** register.

Figure 10-2. 16-Bit Input Edge Count Mode Example

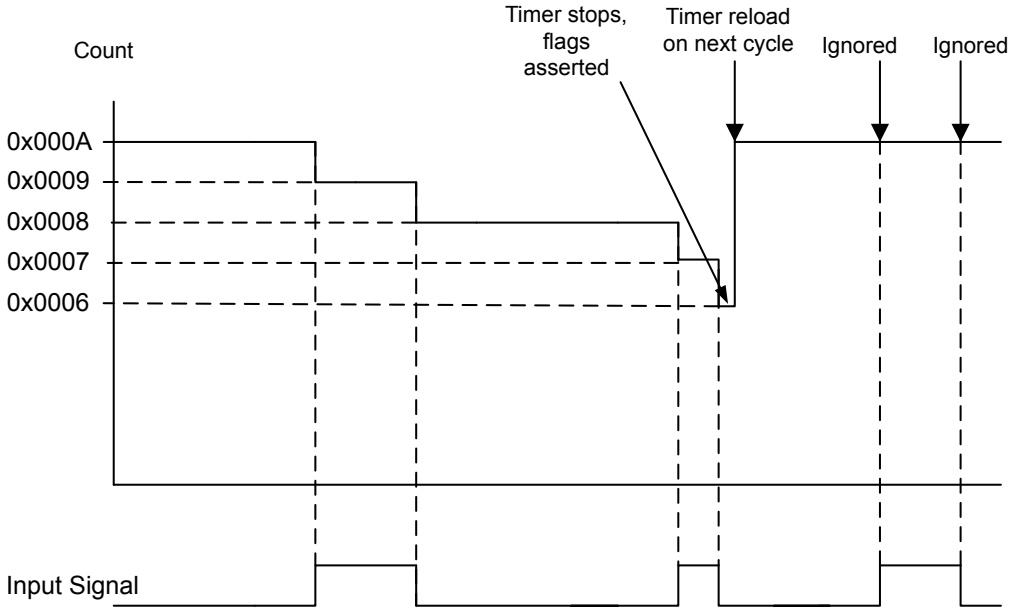

10.2.3.3 16-Bit Input Edge Time Mode

Note: For rising-edge detection, the input signal must be High for at least two system clock periods following the rising edge. Similarly, for falling edge detection, the input signal must be Low for at least two system clock periods following the falling edge. Based on this criteria, the maximum input frequency for edge detection is 1/4 of the system frequency.

Note: The prescaler is not available in 16-Bit Input Edge Time mode.

In Edge Time mode, the timer is configured as a free-running down-counter initialized to the value loaded in the **GPTMTnILR** register (or 0xFFFF at reset). This mode allows for event capture of either rising or falling edges, but not both. The timer is placed into Edge Time mode by setting the TnCMR bit in the **GPTMTnMR** register, and the type of event that the timer captures is determined by the TnEVENT fields of the **GPTMCnTL** register.

When software writes the TnEN bit in the **GPTMCTL** register, the timer is enabled for event capture. When the selected input event is detected, the current Tn counter value is captured in the **GPTMTnR** register and is available to be read by the controller. The GPTM then asserts the CnERIS bit (and the CnEMIS bit, if the interrupt is not masked).

After an event has been captured, the timer does not stop counting. It continues to count until the TnEN bit is cleared. When the timer reaches the 0x0000 state, it is reloaded with the value from the **GPTMnILR** register.

Figure 10-3 on page 228 shows how input edge timing mode works. In the diagram, it is assumed that the start value of the timer is the default value of 0xFFFF, and the timer is configured to capture rising edge events.

Each time a rising edge event is detected, the current count value is loaded into the **GPTMTnR** register, and is held there until another rising edge is detected (at which point the new count value is loaded into **GPTMTnR**).

Figure 10-3. 16-Bit Input Edge Time Mode Example

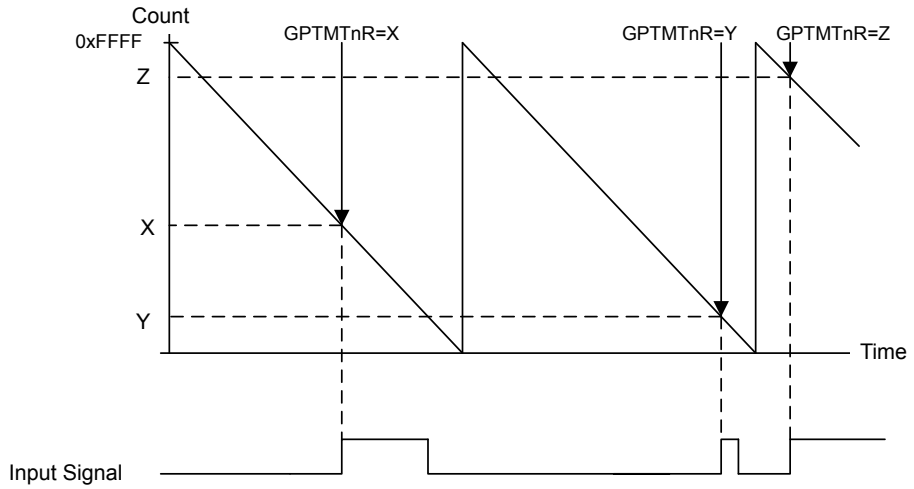

10.2.3.4 16-Bit PWM Mode

Note: The prescaler is not available in 16-Bit PWM mode.

The GPTM supports a simple PWM generation mode. In PWM mode, the timer is configured as a down-counter with a start value (and thus period) defined by **GPTMTnILR**. PWM mode is enabled with the **GPTMTnMR** register by setting the `TnAMS` bit to 0x1, the `TnCMR` bit to 0x0, and the `TnMR` field to 0x2.

When software writes the `TnEN` bit in the **GPTMCTL** register, the counter begins counting down until it reaches the 0x0000 state. On the next counter cycle, the counter reloads its start value from **GPTMTnILR** and continues counting until disabled by software clearing the `TnEN` bit in the **GPTMCTL** register. No interrupts or status bits are asserted in PWM mode.

The output PWM signal asserts when the counter is at the value of the **GPTMTnILR** register (its start state), and is deasserted when the counter value equals the value in the **GPTM Timern Match Register (GPTMnMATCHR)**. Software has the capability of inverting the output PWM signal by setting the `TnPWML` bit in the **GPTMCTL** register.

Figure 10-4 on page 229 shows how to generate an output PWM with a 1-ms period and a 66% duty cycle assuming a 50-MHz input clock and **TnPWML** =0 (duty cycle would be 33% for the **TnPWML** =1 configuration). For this example, the start value is **GPTMnIRL**=0xC350 and the match value is **GPTMnMR**=0x411A.

Figure 10-4. 16-Bit PWM Mode Example

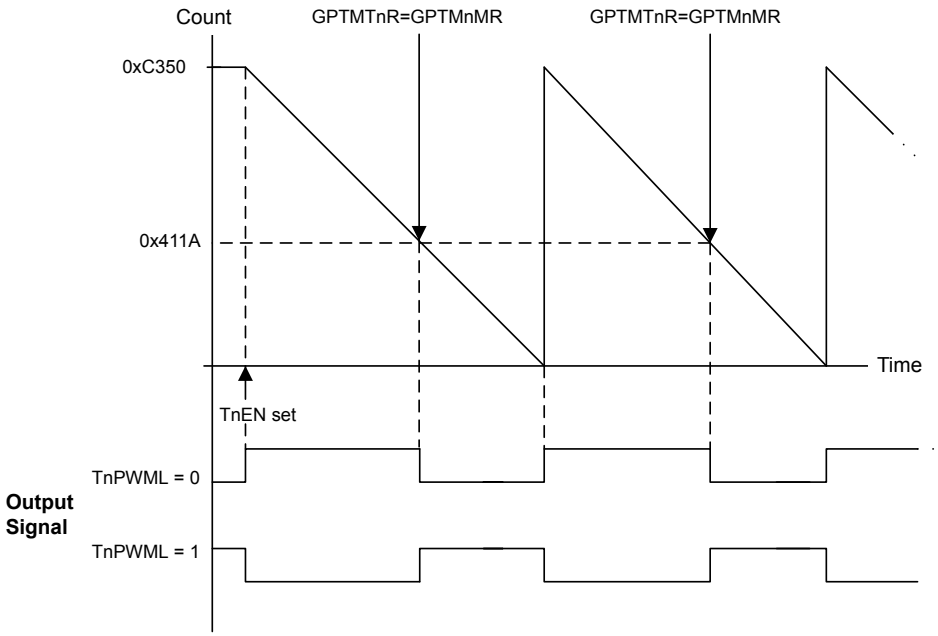

10.3 Initialization and Configuration

To use the general-purpose timers, the peripheral clock must be enabled by setting the `TIMER0`, `TIMER1`, `TIMER2`, and `TIMER3` bits in the **RCGC1** register.

This section shows module initialization and configuration examples for each of the supported timer modes.

10.3.1 32-Bit One-Shot/Periodic Timer Mode

The GPTM is configured for 32-bit One-Shot and Periodic modes by the following sequence:

1. Ensure the timer is disabled (the `TAEN` bit in the **GPTMCTL** register is cleared) before making any changes.
2. Write the **GPTM Configuration Register (GPTMCFG)** with a value of 0x0.
3. Set the `TAMR` field in the **GPTM TimerA Mode Register (GPTMTAMR)**:
   a. Write a value of 0x1 for One-Shot mode.
   b. Write a value of 0x2 for Periodic mode.
4. Load the start value into the **GPTM TimerA Interval Load Register (GPTMTAILR)**.
5. If interrupts are required, set the `TATOIM` bit in the **GPTM Interrupt Mask Register (GPTMIMR)**.
6. Set the `TAEN` bit in the **GPTMCTL** register to enable the timer and start counting.

7. Poll the TATORIS bit in the **GPTMRIS** register or wait for the interrupt to be generated (if enabled). In both cases, the status flags are cleared by writing a 1 to the TATOCINT bit of the **GPTM Interrupt Clear Register (GPTMICR)**.

In One-Shot mode, the timer stops counting after step 7 on page 230. To re-enable the timer, repeat the sequence. A timer configured in Periodic mode does not stop counting after it times out.

10.3.2 32-Bit Real-Time Clock (RTC) Mode

To use the RTC mode, the timer must have a 32.768-KHz input signal on its CCP0, CCP2, or CCP4 pins. To enable the RTC feature, follow these steps:

1. Ensure the timer is disabled (the TAEN bit is cleared) before making any changes.
2. Write the **GPTM Configuration Register (GPTMCFG)** with a value of 0x1.
3. Write the desired match value to the **GPTM TimerA Match Register (GPTMTAMATCHR)**.
4. Set/clear the RTCEN bit in the **GPTM Control Register (GPTMCTL)** as desired.
5. If interrupts are required, set the RTCIM bit in the **GPTM Interrupt Mask Register (GPTMIMR)**.
6. Set the TAEN bit in the **GPTMCTL** register to enable the timer and start counting.

When the timer count equals the value in the **GPTMTAMATCHR** register, the counter is re-loaded with 0x0000.0000 and begins counting. If an interrupt is enabled, it does not have to be cleared.

10.3.3 16-Bit One-Shot/Periodic Timer Mode

A timer is configured for 16-bit One-Shot and Periodic modes by the following sequence:

1. Ensure the timer is disabled (the TnEN bit is cleared) before making any changes.
2. Write the **GPTM Configuration Register (GPTMCFG)** with a value of 0x4.
3. Set the TnMR field in the **GPTM Timer Mode (GPTMTnMR)** register:
   a. Write a value of 0x1 for One-Shot mode.
   b. Write a value of 0x2 for Periodic mode.
4. If a prescaler is to be used, write the prescale value to the **GPTM Timern Prescale Register (GPTMTnPR)**.
5. Load the start value into the **GPTM Timer Interval Load Register (GPTMTnILR)**.
6. If interrupts are required, set the TnTOIM bit in the **GPTM Interrupt Mask Register (GPTMIMR)**.
7. Set the TnEN bit in the **GPTM Control Register (GPTMCTL)** to enable the timer and start counting.
8. Poll the TnTORIS bit in the **GPTMRIS** register or wait for the interrupt to be generated (if enabled). In both cases, the status flags are cleared by writing a 1 to the TnTOCINT bit of the **GPTM Interrupt Clear Register (GPTMICR)**.

In One-Shot mode, the timer stops counting after step 8 on page 230. To re-enable the timer, repeat the sequence. A timer configured in Periodic mode does not stop counting after it times out.

10.3.4 16-Bit Input Edge Count Mode

A timer is configured to Input Edge Count mode by the following sequence:

1. Ensure the timer is disabled (the `TnEN` bit is cleared) before making any changes.
2. Write the **GPTM Configuration (GPTMCFG)** register with a value of 0x4.
3. In the **GPTM Timer Mode (GPTMTnMR)** register, write the `TnCMR` field to 0x0 and the `TnMR` field to 0x3.
4. Configure the type of event(s) that the timer captures by writing the `TnEVENT` field of the **GPTM Control (GPTMCTL)** register.
5. Load the timer start value into the **GPTM Timern Interval Load (GPTMTnILR)** register.
6. Load the desired event count into the **GPTM Timern Match (GPTMTnMATCHR)** register.
7. If interrupts are required, set the `CnMIM` bit in the **GPTM Interrupt Mask (GPTMIMR)** register.
8. Set the `TnEN` bit in the **GPTMCTL** register to enable the timer and begin waiting for edge events.
9. Poll the `CnMRIS` bit in the **GPTMRIS** register or wait for the interrupt to be generated (if enabled). In both cases, the status flags are cleared by writing a 1 to the `CnMCINT` bit of the **GPTM Interrupt Clear (GPTMICR)** register.

In Input Edge Count Mode, the timer stops after the desired number of edge events has been detected. To re-enable the timer, ensure that the `TnEN` bit is cleared and repeat step 4 on page 231 through step 9 on page 231.

10.3.5 16-Bit Input Edge Timing Mode

A timer is configured to Input Edge Timing mode by the following sequence:

1. Ensure the timer is disabled (the `TnEN` bit is cleared) before making any changes.
2. Write the **GPTM Configuration (GPTMCFG)** register with a value of 0x4.
3. In the **GPTM Timer Mode (GPTMTnMR)** register, write the `TnCMR` field to 0x1 and the `TnMR` field to 0x3.
4. Configure the type of event that the timer captures by writing the `TnEVENT` field of the **GPTM Control (GPTMCTL)** register.
5. Load the timer start value into the **GPTM Timern Interval Load (GPTMTnILR)** register.
6. If interrupts are required, set the `CnEIM` bit in the **GPTM Interrupt Mask (GPTMIMR)** register.
7. Set the `TnEN` bit in the **GPTM Control (GPTMCTL)** register to enable the timer and start counting.
8. Poll the `CnERIS` bit in the **GPTMRIS** register or wait for the interrupt to be generated (if enabled). In both cases, the status flags are cleared by writing a 1 to the `CnECINT` bit of the **GPTM**

Interrupt Clear (GPTMICR) register. The time at which the event happened can be obtained by reading the **GPTM Timern (GPTMTnR)** register.

In Input Edge Timing mode, the timer continues running after an edge event has been detected, but the timer interval can be changed at any time by writing the **GPTMTnILR** register. The change takes effect at the next cycle after the write.

10.3.6 16-Bit PWM Mode

A timer is configured to PWM mode using the following sequence:

1. Ensure the timer is disabled (the `TnEN` bit is cleared) before making any changes.
2. Write the **GPTM Configuration (GPTMCFG)** register with a value of 0x4.
3. In the **GPTM Timer Mode (GPTMTnMR)** register, set the `TnAMS` bit to 0x1, the `TnCMR` bit to 0x0, and the `TnMR` field to 0x2.
4. Configure the output state of the PWM signal (whether or not it is inverted) in the `TnEVENT` field of the **GPTM Control (GPTMCTL)** register.
5. Load the timer start value into the **GPTM Timern Interval Load (GPTMTnILR)** register.
6. Load the **GPTM Timern Match (GPTMTnMATCHR)** register with the desired value.
7. Set the `TnEN` bit in the **GPTM Control (GPTMCTL)** register to enable the timer and begin generation of the output PWM signal.

In PWM Timing mode, the timer continues running after the PWM signal has been generated. The PWM period can be adjusted at any time by writing the **GPTMTnILR** register, and the change takes effect at the next cycle after the write.

10.4 Register Map

Table 10-3 on page 232 lists the GPTM registers. The offset listed is a hexadecimal increment to the register's address, relative to that timer's base address:

- Timer0: 0x4003.0000
- Timer1: 0x4003.1000
- Timer2: 0x4003.2000
- Timer3: 0x4003.3000

Table 10-3. Timers Register Map

Offset	Name	Type	Reset	Description	See page
0x000	GPTMCFG	R/W	0x0000.0000	GPTM Configuration	234
0x004	GPTMTAMR	R/W	0x0000.0000	GPTM TimerA Mode	235
0x008	GPTMTBMR	R/W	0x0000.0000	GPTM TimerB Mode	237
0x00C	GPTMCTL	R/W	0x0000.0000	GPTM Control	239
0x018	GPTMIMR	R/W	0x0000.0000	GPTM Interrupt Mask	242
0x01C	GPTMRIS	RO	0x0000.0000	GPTM Raw Interrupt Status	244

Offset	Name	Type	Reset	Description	See page
0x020	GPTMMIS	RO	0x0000.0000	GPTM Masked Interrupt Status	245
0x024	GPTMICR	W1C	0x0000.0000	GPTM Interrupt Clear	246
0x028	GPTMTAILR	R/W	0x0000.FFFF (16-bit mode) 0xFFFF.FFFF (32-bit mode)	GPTM TimerA Interval Load	248
0x02C	GPTMTBILR	R/W	0x0000.FFFF	GPTM TimerB Interval Load	249
0x030	GPTMTAMATCHR	R/W	0x0000.FFFF (16-bit mode) 0xFFFF.FFFF (32-bit mode)	GPTM TimerA Match	250
0x034	GPTMTBMATCHR	R/W	0x0000.FFFF	GPTM TimerB Match	251
0x038	GPTMTAPR	R/W	0x0000.0000	GPTM TimerA Prescale	252
0x03C	GPTMTBPR	R/W	0x0000.0000	GPTM TimerB Prescale	253
0x040	GPTMTAPMR	R/W	0x0000.0000	GPTM TimerA Prescale Match	254
0x044	GPTMTBPMR	R/W	0x0000.0000	GPTM TimerB Prescale Match	255
0x048	GPTMTAR	RO	0x0000.FFFF (16-bit mode) 0xFFFF.FFFF (32-bit mode)	GPTM TimerA	256
0x04C	GPTMTBR	RO	0x0000.FFFF	GPTM TimerB	257

10.5 Register Descriptions

The remainder of this section lists and describes the GPTM registers, in numerical order by address offset.

Register 1: GPTM Configuration (GPTMCFG), offset 0x000

This register configures the global operation of the GPTM module. The value written to this register determines whether the GPTM is in 32- or 16-bit mode.

GPTM Configuration (GPTMCFG)

Timer0 base: 0x4003.0000
Timer1 base: 0x4003.1000
Timer2 base: 0x4003.2000
Timer3 base: 0x4003.3000
Offset 0x000
Type R/W, reset 0x0000.0000

	31	30	29	28	27	26	25	24	23	22	21	20	19	18	17	16
	reserved															
Type	RO	RO	RO	RO	RO	RO	RO	RO	RO	RO	RO	RO	RO	RO	RO	RO
Reset	0	0	0	0	0	0	0	0	0	0	0	0	0	0	0	0

	15	14	13	12	11	10	9	8	7	6	5	4	3	2	1	0
	reserved													GPTMCFG		
Type	RO	RO	RO	RO	RO	RO	RO	RO	RO	RO	RO	RO	RO	R/W	R/W	R/W
Reset	0	0	0	0	0	0	0	0	0	0	0	0	0	0	0	0

Bit/Field	Name	Type	Reset	Description
31:3	reserved	RO	0x00	Software should not rely on the value of a reserved bit. To provide compatibility with future products, the value of a reserved bit should be preserved across a read-modify-write operation.
2:0	GPTMCFG	R/W	0x0	GPTM Configuration The `GPTMCFG` values are defined as follows: Value — Description 0x0 — 32-bit timer configuration. 0x1 — 32-bit real-time clock (RTC) counter configuration. 0x2 — Reserved 0x3 — Reserved 0x4-0x7 — 16-bit timer configuration, function is controlled by bits 1:0 of **GPTMTAMR** and **GPTMTBMR**.

Register 2: GPTM TimerA Mode (GPTMTAMR), offset 0x004

This register configures the GPTM based on the configuration selected in the **GPTMCFG** register. When in 16-bit PWM mode, set the TAAMS bit to 0x1, the TACMR bit to 0x0, and the TAMR field to 0x2.

GPTM TimerA Mode (GPTMTAMR)

Timer0 base: 0x4003.0000
Timer1 base: 0x4003.1000
Timer2 base: 0x4003.2000
Timer3 base: 0x4003.3000
Offset 0x004
Type R/W, reset 0x0000.0000

	31	30	29	28	27	26	25	24	23	22	21	20	19	18	17	16
	reserved															
Type	RO	RO	RO	RO	RO	RO	RO	RO	RO	RO	RO	RO	RO	RO	RO	RO
Reset	0	0	0	0	0	0	0	0	0	0	0	0	0	0	0	0

	15	14	13	12	11	10	9	8	7	6	5	4	3	2	1	0
	reserved												TAAMS	TACMR	TAMR	
Type	RO	RO	RO	RO	RO	RO	RO	RO	RO	RO	RO	RO	R/W	R/W	R/W	R/W
Reset	0	0	0	0	0	0	0	0	0	0	0	0	0	0	0	0

Bit/Field	Name	Type	Reset	Description
31:4	reserved	RO	0x00	Software should not rely on the value of a reserved bit. To provide compatibility with future products, the value of a reserved bit should be preserved across a read-modify-write operation.
3	TAAMS	R/W	0	GPTM TimerA Alternate Mode Select The TAAMS values are defined as follows: Value Description 0 Capture mode is enabled. 1 PWM mode is enabled. **Note:** To enable PWM mode, you must also clear the TACMR bit and set the TAMR field to 0x2.
2	TACMR	R/W	0	GPTM TimerA Capture Mode The TACMR values are defined as follows: Value Description 0 Edge-Count mode 1 Edge-Time mode

Bit/Field	Name	Type	Reset	Description
1:0	TAMR	R/W	0x0	GPTM TimerA Mode The `TAMR` values are defined as follows: Value Description 0x0 Reserved 0x1 One-Shot Timer mode 0x2 Periodic Timer mode 0x3 Capture mode The Timer mode is based on the timer configuration defined by bits 2:0 in the **GPTMCFG** register (16-or 32-bit). In 16-bit timer configuration, `TAMR` controls the 16-bit timer modes for TimerA. In 32-bit timer configuration, this register controls the mode and the contents of **GPTMTBMR** are ignored.

Register 3: GPTM TimerB Mode (GPTMTBMR), offset 0x008

This register configures the GPTM based on the configuration selected in the **GPTMCFG** register. When in 16-bit PWM mode, set the TBAMS bit to 0x1, the TBCMR bit to 0x0, and the TBMR field to 0x2.

GPTM TimerB Mode (GPTMTBMR)

Timer0 base: 0x4003.0000
Timer1 base: 0x4003.1000
Timer2 base: 0x4003.2000
Timer3 base: 0x4003.3000
Offset 0x008
Type R/W, reset 0x0000.0000

	31	30	29	28	27	26	25	24	23	22	21	20	19	18	17	16
	reserved															
Type	RO	RO	RO	RO	RO	RO	RO	RO	RO	RO	RO	RO	RO	RO	RO	RO
Reset	0	0	0	0	0	0	0	0	0	0	0	0	0	0	0	0

	15	14	13	12	11	10	9	8	7	6	5	4	3	2	1	0
	reserved												TBAMS	TBCMR	TBMR	
Type	RO	RO	RO	RO	RO	RO	RO	RO	RO	RO	RO	RO	R/W	R/W	R/W	R/W
Reset	0	0	0	0	0	0	0	0	0	0	0	0	0	0	0	0

Bit/Field	Name	Type	Reset	Description
31:4	reserved	RO	0x00	Software should not rely on the value of a reserved bit. To provide compatibility with future products, the value of a reserved bit should be preserved across a read-modify-write operation.
3	TBAMS	R/W	0	GPTM TimerB Alternate Mode Select The TBAMS values are defined as follows: Value Description 0 Capture mode is enabled. 1 PWM mode is enabled. **Note:** To enable PWM mode, you must also clear the TBCMR bit and set the TBMR field to 0x2.
2	TBCMR	R/W	0	GPTM TimerB Capture Mode The TBCMR values are defined as follows: Value Description 0 Edge-Count mode 1 Edge-Time mode

Bit/Field	Name	Type	Reset	Description
1:0	TBMR	R/W	0x0	GPTM TimerB Mode The `TBMR` values are defined as follows: Value Description 0x0 Reserved 0x1 One-Shot Timer mode 0x2 Periodic Timer mode 0x3 Capture mode The timer mode is based on the timer configuration defined by bits 2:0 in the **GPTMCFG** register. In 16-bit timer configuration, these bits control the 16-bit timer modes for TimerB. In 32-bit timer configuration, this register's contents are ignored and **GPTMTAMR** is used.

Register 4: GPTM Control (GPTMCTL), offset 0x00C

This register is used alongside the **GPTMCFG** and **GMTMTnMR** registers to fine-tune the timer configuration, and to enable other features such as timer stall and the output trigger. The output trigger can be used to initiate transfers on the ADC module.

GPTM Control (GPTMCTL)

Timer0 base: 0x4003.0000
Timer1 base: 0x4003.1000
Timer2 base: 0x4003.2000
Timer3 base: 0x4003.3000
Offset 0x00C
Type R/W, reset 0x0000.0000

	31	30	29	28	27	26	25	24	23	22	21	20	19	18	17	16
	reserved															
Type	RO	RO	RO	RO	RO	RO	RO	RO	RO	RO	RO	RO	RO	RO	RO	RO
Reset	0	0	0	0	0	0	0	0	0	0	0	0	0	0	0	0

	15	14	13	12	11	10	9	8	7	6	5	4	3	2	1	0
	reserved	TBPWML	TBOTE	reserved	TBEVENT		TBSTALL	TBEN	reserved	TAPWML	TAOTE	RTCEN	TAEVENT		TASTALL	TAEN
Type	RO	R/W	R/W	RO	R/W	R/W	R/W	R/W	RO	R/W	R/W	R/W	R/W	R/W	R/W	R/W
Reset	0	0	0	0	0	0	0	0	0	0	0	0	0	0	0	0

Bit/Field	Name	Type	Reset	Description
31:15	reserved	RO	0x00	Software should not rely on the value of a reserved bit. To provide compatibility with future products, the value of a reserved bit should be preserved across a read-modify-write operation.
14	TBPWML	R/W	0	GPTM TimerB PWM Output Level The `TBPWML` values are defined as follows: Value Description 0 Output is unaffected. 1 Output is inverted.
13	TBOTE	R/W	0	GPTM TimerB Output Trigger Enable The `TBOTE` values are defined as follows: Value Description 0 The output TimerB ADC trigger is disabled. 1 The output TimerB ADC trigger is enabled. In addition, the ADC must be enabled and the timer selected as a trigger source with the `EMn` bit in the **ADCEMUX** register (see page 297).
12	reserved	RO	0	Software should not rely on the value of a reserved bit. To provide compatibility with future products, the value of a reserved bit should be preserved across a read-modify-write operation.

Bit/Field	Name	Type	Reset	Description
11:10	TBEVENT	R/W	0x0	GPTM TimerB Event Mode The `TBEVENT` values are defined as follows: Value Description 0x0 Positive edge 0x1 Negative edge 0x2 Reserved 0x3 Both edges
9	TBSTALL	R/W	0	GPTM TimerB Stall Enable The `TBSTALL` values are defined as follows: Value Description 0 TimerB stalling is disabled. 1 TimerB stalling is enabled.
8	TBEN	R/W	0	GPTM TimerB Enable The `TBEN` values are defined as follows: Value Description 0 TimerB is disabled. 1 TimerB is enabled and begins counting or the capture logic is enabled based on the **GPTMCFG** register.
7	reserved	RO	0	Software should not rely on the value of a reserved bit. To provide compatibility with future products, the value of a reserved bit should be preserved across a read-modify-write operation.
6	TAPWML	R/W	0	GPTM TimerA PWM Output Level The `TAPWML` values are defined as follows: Value Description 0 Output is unaffected. 1 Output is inverted.
5	TAOTE	R/W	0	GPTM TimerA Output Trigger Enable The `TAOTE` values are defined as follows: Value Description 0 The output TimerA ADC trigger is disabled. 1 The output TimerA ADC trigger is enabled. In addition, the ADC must be enabled and the timer selected as a trigger source with the `EMn` bit in the **ADCEMUX** register (see page 297).

Bit/Field	Name	Type	Reset	Description
4	RTCEN	R/W	0	GPTM RTC Enable The RTCEN values are defined as follows: Value Description 0 RTC counting is disabled. 1 RTC counting is enabled.
3:2	TAEVENT	R/W	0x0	GPTM TimerA Event Mode The TAEVENT values are defined as follows: Value Description 0x0 Positive edge 0x1 Negative edge 0x2 Reserved 0x3 Both edges
1	TASTALL	R/W	0	GPTM TimerA Stall Enable The TASTALL values are defined as follows: Value Description 0 TimerA stalling is disabled. 1 TimerA stalling is enabled.
0	TAEN	R/W	0	GPTM TimerA Enable The TAEN values are defined as follows: Value Description 0 TimerA is disabled. 1 TimerA is enabled and begins counting or the capture logic is enabled based on the **GPTMCFG** register.

Register 5: GPTM Interrupt Mask (GPTMIMR), offset 0x018

This register allows software to enable/disable GPTM controller-level interrupts. Writing a 1 enables the interrupt, while writing a 0 disables it.

GPTM Interrupt Mask (GPTMIMR)

Timer0 base: 0x4003.0000
Timer1 base: 0x4003.1000
Timer2 base: 0x4003.2000
Timer3 base: 0x4003.3000
Offset 0x018
Type R/W, reset 0x0000.0000

	31	30	29	28	27	26	25	24	23	22	21	20	19	18	17	16
	reserved															
Type	RO	RO	RO	RO	RO	RO	RO	RO	RO	RO	RO	RO	RO	RO	RO	RO
Reset	0	0	0	0	0	0	0	0	0	0	0	0	0	0	0	0

	15	14	13	12	11	10	9	8	7	6	5	4	3	2	1	0
	reserved					CBEIM	CBMIM	TBTOIM	reserved				RTCIM	CAEIM	CAMIM	TATOIM
Type	RO	RO	RO	RO	RO	R/W	R/W	R/W	RO	RO	RO	RO	R/W	R/W	R/W	R/W
Reset	0	0	0	0	0	0	0	0	0	0	0	0	0	0	0	0

Bit/Field	Name	Type	Reset	Description
31:11	reserved	RO	0x00	Software should not rely on the value of a reserved bit. To provide compatibility with future products, the value of a reserved bit should be preserved across a read-modify-write operation.
10	CBEIM	R/W	0	GPTM CaptureB Event Interrupt Mask The `CBEIM` values are defined as follows: Value Description 0 Interrupt is disabled. 1 Interrupt is enabled.
9	CBMIM	R/W	0	GPTM CaptureB Match Interrupt Mask The `CBMIM` values are defined as follows: Value Description 0 Interrupt is disabled. 1 Interrupt is enabled.
8	TBTOIM	R/W	0	GPTM TimerB Time-Out Interrupt Mask The `TBTOIM` values are defined as follows: Value Description 0 Interrupt is disabled. 1 Interrupt is enabled.
7:4	reserved	RO	0	Software should not rely on the value of a reserved bit. To provide compatibility with future products, the value of a reserved bit should be preserved across a read-modify-write operation.

Bit/Field	Name	Type	Reset	Description
3	RTCIM	R/W	0	GPTM RTC Interrupt Mask The `RTCIM` values are defined as follows: Value Description 0 Interrupt is disabled. 1 Interrupt is enabled.
2	CAEIM	R/W	0	GPTM CaptureA Event Interrupt Mask The `CAEIM` values are defined as follows: Value Description 0 Interrupt is disabled. 1 Interrupt is enabled.
1	CAMIM	R/W	0	GPTM CaptureA Match Interrupt Mask The `CAMIM` values are defined as follows: Value Description 0 Interrupt is disabled. 1 Interrupt is enabled.
0	TATOIM	R/W	0	GPTM TimerA Time-Out Interrupt Mask The `TATOIM` values are defined as follows: Value Description 0 Interrupt is disabled. 1 Interrupt is enabled.

Register 6: GPTM Raw Interrupt Status (GPTMRIS), offset 0x01C

This register shows the state of the GPTM's internal interrupt signal. These bits are set whether or not the interrupt is masked in the **GPTMIMR** register. Each bit can be cleared by writing a 1 to its corresponding bit in **GPTMICR**.

GPTM Raw Interrupt Status (GPTMRIS)

Timer0 base: 0x4003.0000
Timer1 base: 0x4003.1000
Timer2 base: 0x4003.2000
Timer3 base: 0x4003.3000
Offset 0x01C
Type RO, reset 0x0000.0000

	31	30	29	28	27	26	25	24	23	22	21	20	19	18	17	16
	reserved															
Type	RO	RO	RO	RO	RO	RO	RO	RO	RO	RO	RO	RO	RO	RO	RO	RO
Reset	0	0	0	0	0	0	0	0	0	0	0	0	0	0	0	0

	15	14	13	12	11	10	9	8	7	6	5	4	3	2	1	0
	reserved					CBERIS	CBMRIS	TBTORIS	reserved				RTCRIS	CAERIS	CAMRIS	TATORIS
Type	RO	RO	RO	RO	RO	RO	RO	RO	RO	RO	RO	RO	RO	RO	RO	RO
Reset	0	0	0	0	0	0	0	0	0	0	0	0	0	0	0	0

Bit/Field	Name	Type	Reset	Description
31:11	reserved	RO	0x00	Software should not rely on the value of a reserved bit. To provide compatibility with future products, the value of a reserved bit should be preserved across a read-modify-write operation.
10	CBERIS	RO	0	GPTM CaptureB Event Raw Interrupt This is the CaptureB Event interrupt status prior to masking.
9	CBMRIS	RO	0	GPTM CaptureB Match Raw Interrupt This is the CaptureB Match interrupt status prior to masking.
8	TBTORIS	RO	0	GPTM TimerB Time-Out Raw Interrupt This is the TimerB time-out interrupt status prior to masking.
7:4	reserved	RO	0x0	Software should not rely on the value of a reserved bit. To provide compatibility with future products, the value of a reserved bit should be preserved across a read-modify-write operation.
3	RTCRIS	RO	0	GPTM RTC Raw Interrupt This is the RTC Event interrupt status prior to masking.
2	CAERIS	RO	0	GPTM CaptureA Event Raw Interrupt This is the CaptureA Event interrupt status prior to masking.
1	CAMRIS	RO	0	GPTM CaptureA Match Raw Interrupt This is the CaptureA Match interrupt status prior to masking.
0	TATORIS	RO	0	GPTM TimerA Time-Out Raw Interrupt This the TimerA time-out interrupt status prior to masking.

Register 7: GPTM Masked Interrupt Status (GPTMMIS), offset 0x020

This register show the state of the GPTM's controller-level interrupt. If an interrupt is unmasked in **GPTMIMR**, and there is an event that causes the interrupt to be asserted, the corresponding bit is set in this register. All bits are cleared by writing a 1 to the corresponding bit in **GPTMICR**.

GPTM Masked Interrupt Status (GPTMMIS)

Timer0 base: 0x4003.0000
Timer1 base: 0x4003.1000
Timer2 base: 0x4003.2000
Timer3 base: 0x4003.3000
Offset 0x020
Type RO, reset 0x0000.0000

	31	30	29	28	27	26	25	24	23	22	21	20	19	18	17	16
	reserved															
Type	RO	RO	RO	RO	RO	RO	RO	RO	RO	RO	RO	RO	RO	RO	RO	RO
Reset	0	0	0	0	0	0	0	0	0	0	0	0	0	0	0	0

	15	14	13	12	11	10	9	8	7	6	5	4	3	2	1	0
	reserved					CBEMIS	CBMMIS	TBTOMIS	reserved				RTCMIS	CAEMIS	CAMMIS	TATOMIS
Type	RO	RO	RO	RO	RO	RO	RO	RO	RO	RO	RO	RO	RO	RO	RO	RO
Reset	0	0	0	0	0	0	0	0	0	0	0	0	0	0	0	0

Bit/Field	Name	Type	Reset	Description
31:11	reserved	RO	0x00	Software should not rely on the value of a reserved bit. To provide compatibility with future products, the value of a reserved bit should be preserved across a read-modify-write operation.
10	CBEMIS	RO	0	GPTM CaptureB Event Masked Interrupt This is the CaptureB event interrupt status after masking.
9	CBMMIS	RO	0	GPTM CaptureB Match Masked Interrupt This is the CaptureB match interrupt status after masking.
8	TBTOMIS	RO	0	GPTM TimerB Time-Out Masked Interrupt This is the TimerB time-out interrupt status after masking.
7:4	reserved	RO	0x0	Software should not rely on the value of a reserved bit. To provide compatibility with future products, the value of a reserved bit should be preserved across a read-modify-write operation.
3	RTCMIS	RO	0	GPTM RTC Masked Interrupt This is the RTC event interrupt status after masking.
2	CAEMIS	RO	0	GPTM CaptureA Event Masked Interrupt This is the CaptureA event interrupt status after masking.
1	CAMMIS	RO	0	GPTM CaptureA Match Masked Interrupt This is the CaptureA match interrupt status after masking.
0	TATOMIS	RO	0	GPTM TimerA Time-Out Masked Interrupt This is the TimerA time-out interrupt status after masking.

Register 8: GPTM Interrupt Clear (GPTMICR), offset 0x024

This register is used to clear the status bits in the **GPTMRIS** and **GPTMMIS** registers. Writing a 1 to a bit clears the corresponding bit in the **GPTMRIS** and **GPTMMIS** registers.

GPTM Interrupt Clear (GPTMICR)

Timer0 base: 0x4003.0000
Timer1 base: 0x4003.1000
Timer2 base: 0x4003.2000
Timer3 base: 0x4003.3000
Offset 0x024
Type W1C, reset 0x0000.0000

	31	30	29	28	27	26	25	24	23	22	21	20	19	18	17	16
	reserved															
Type	RO	RO	RO	RO	RO	RO	RO	RO	RO	RO	RO	RO	RO	RO	RO	RO
Reset	0	0	0	0	0	0	0	0	0	0	0	0	0	0	0	0

	15	14	13	12	11	10	9	8	7	6	5	4	3	2	1	0
	reserved					CBECINT	CBMCINT	TBTOCINT	reserved				RTCCINT	CAECINT	CAMCINT	TATOCINT
Type	RO	RO	RO	RO	RO	W1C	W1C	W1C	RO	RO	RO	RO	W1C	W1C	W1C	W1C
Reset	0	0	0	0	0	0	0	0	0	0	0	0	0	0	0	0

Bit/Field	Name	Type	Reset	Description
31:11	reserved	RO	0x00	Software should not rely on the value of a reserved bit. To provide compatibility with future products, the value of a reserved bit should be preserved across a read-modify-write operation.
10	CBECINT	W1C	0	GPTM CaptureB Event Interrupt Clear The `CBECINT` values are defined as follows: Value Description 0 The interrupt is unaffected. 1 The interrupt is cleared.
9	CBMCINT	W1C	0	GPTM CaptureB Match Interrupt Clear The `CBMCINT` values are defined as follows: Value Description 0 The interrupt is unaffected. 1 The interrupt is cleared.
8	TBTOCINT	W1C	0	GPTM TimerB Time-Out Interrupt Clear The `TBTOCINT` values are defined as follows: Value Description 0 The interrupt is unaffected. 1 The interrupt is cleared.
7:4	reserved	RO	0x0	Software should not rely on the value of a reserved bit. To provide compatibility with future products, the value of a reserved bit should be preserved across a read-modify-write operation.

Bit/Field	Name	Type	Reset	Description
3	RTCCINT	W1C	0	GPTM RTC Interrupt Clear The `RTCCINT` values are defined as follows: Value Description 0 The interrupt is unaffected. 1 The interrupt is cleared.
2	CAECINT	W1C	0	GPTM CaptureA Event Interrupt Clear The `CAECINT` values are defined as follows: Value Description 0 The interrupt is unaffected. 1 The interrupt is cleared.
1	CAMCINT	W1C	0	GPTM CaptureA Match Raw Interrupt This is the CaptureA match interrupt status after masking.
0	TATOCINT	W1C	0	GPTM TimerA Time-Out Raw Interrupt The `TATOCINT` values are defined as follows: Value Description 0 The interrupt is unaffected. 1 The interrupt is cleared.

Register 9: GPTM TimerA Interval Load (GPTMTAILR), offset 0x028

This register is used to load the starting count value into the timer. When GPTM is configured to one of the 32-bit modes, **GPTMTAILR** appears as a 32-bit register (the upper 16-bits correspond to the contents of the **GPTM TimerB Interval Load (GPTMTBILR)** register). In 16-bit mode, the upper 16 bits of this register read as 0s and have no effect on the state of **GPTMTBILR**.

GPTM TimerA Interval Load (GPTMTAILR)

Timer0 base: 0x4003.0000
Timer1 base: 0x4003.1000
Timer2 base: 0x4003.2000
Timer3 base: 0x4003.3000
Offset 0x028
Type R/W, reset 0x0000.FFFF (16-bit mode) and 0xFFFF.FFFF (32-bit mode)

	31	30	29	28	27	26	25	24	23	22	21	20	19	18	17	16
	TAILRH															
Type	R/W	R/W	R/W	R/W	R/W	R/W	R/W	R/W	R/W	R/W	R/W	R/W	R/W	R/W	R/W	R/W
Reset	0	1	1	0	1	0	1	1	1	1	0	1	1	1	1	0

	15	14	13	12	11	10	9	8	7	6	5	4	3	2	1	0
	TAILRL															
Type	R/W	R/W	R/W	R/W	R/W	R/W	R/W	R/W	R/W	R/W	R/W	R/W	R/W	R/W	R/W	R/W
Reset	1	1	1	1	1	1	1	1	1	1	1	1	1	1	1	1

Bit/Field	Name	Type	Reset	Description
31:16	TAILRH	R/W	0xFFFF (32-bit mode) 0x0000 (16-bit mode)	GPTM TimerA Interval Load Register High When configured for 32-bit mode via the **GPTMCFG** register, the **GPTM TimerB Interval Load (GPTMTBILR)** register loads this value on a write. A read returns the current value of **GPTMTBILR**. In 16-bit mode, this field reads as 0 and does not have an effect on the state of **GPTMTBILR**.
15:0	TAILRL	R/W	0xFFFF	GPTM TimerA Interval Load Register Low For both 16- and 32-bit modes, writing this field loads the counter for TimerA. A read returns the current value of **GPTMTAILR**.

Register 10: GPTM TimerB Interval Load (GPTMTBILR), offset 0x02C

This register is used to load the starting count value into TimerB. When the GPTM is configured to a 32-bit mode, **GPTMTBILR** returns the current value of TimerB and ignores writes.

GPTM TimerB Interval Load (GPTMTBILR)

Timer0 base: 0x4003.0000
Timer1 base: 0x4003.1000
Timer2 base: 0x4003.2000
Timer3 base: 0x4003.3000
Offset 0x02C
Type R/W, reset 0x0000.FFFF

	31	30	29	28	27	26	25	24	23	22	21	20	19	18	17	16
	reserved															
Type	RO	RO	RO	RO	RO	RO	RO	RO	RO	RO	RO	RO	RO	RO	RO	RO
Reset	0	0	0	0	0	0	0	0	0	0	0	0	0	0	0	0

	15	14	13	12	11	10	9	8	7	6	5	4	3	2	1	0
	TBILRL															
Type	R/W	R/W	R/W	R/W	R/W	R/W	R/W	R/W	R/W	R/W	R/W	R/W	R/W	R/W	R/W	R/W
Reset	1	1	1	1	1	1	1	1	1	1	1	1	1	1	1	1

Bit/Field	Name	Type	Reset	Description
31:16	reserved	RO	0x0000	Software should not rely on the value of a reserved bit. To provide compatibility with future products, the value of a reserved bit should be preserved across a read-modify-write operation.
15:0	TBILRL	R/W	0xFFFF	GPTM TimerB Interval Load Register When the GPTM is not configured as a 32-bit timer, a write to this field updates **GPTMTBILR**. In 32-bit mode, writes are ignored, and reads return the current value of **GPTMTBILR**.

Register 11: GPTM TimerA Match (GPTMTAMATCHR), offset 0x030

This register is used in 32-bit Real-Time Clock mode and 16-bit PWM and Input Edge Count modes.

GPTM TimerA Match (GPTMTAMATCHR)

Timer0 base: 0x4003.0000
Timer1 base: 0x4003.1000
Timer2 base: 0x4003.2000
Timer3 base: 0x4003.3000
Offset 0x030
Type R/W, reset 0x0000.FFFF (16-bit mode) and 0xFFFF.FFFF (32-bit mode)

	31	30	29	28	27	26	25	24	23	22	21	20	19	18	17	16
	TAMRH															
Type	R/W	R/W	R/W	R/W	R/W	R/W	R/W	R/W	R/W	R/W	R/W	R/W	R/W	R/W	R/W	R/W
Reset	0	1	1	0	1	0	1	1	1	1	0	1	1	1	1	0

	15	14	13	12	11	10	9	8	7	6	5	4	3	2	1	0
	TAMRL															
Type	R/W	R/W	R/W	R/W	R/W	R/W	R/W	R/W	R/W	R/W	R/W	R/W	R/W	R/W	R/W	R/W
Reset	1	1	1	1	1	1	1	1	1	1	1	1	1	1	1	1

Bit/Field	Name	Type	Reset	Description
31:16	TAMRH	R/W	0xFFFF (32-bit mode) 0x0000 (16-bit mode)	GPTM TimerA Match Register High When configured for 32-bit Real-Time Clock (RTC) mode via the **GPTMCFG** register, this value is compared to the upper half of **GPTMTAR**, to determine match events. In 16-bit mode, this field reads as 0 and does not have an effect on the state of **GPTMTBMATCHR**.
15:0	TAMRL	R/W	0xFFFF	GPTM TimerA Match Register Low When configured for 32-bit Real-Time Clock (RTC) mode via the **GPTMCFG** register, this value is compared to the lower half of **GPTMTAR**, to determine match events. When configured for PWM mode, this value along with **GPTMTAILR**, determines the duty cycle of the output PWM signal. When configured for Edge Count mode, this value along with **GPTMTAILR**, determines how many edge events are counted. The total number of edge events counted is equal to the value in **GPTMTAILR** minus this value.

Register 12: GPTM TimerB Match (GPTMTBMATCHR), offset 0x034

This register is used in 16-bit PWM and Input Edge Count modes.

GPTM TimerB Match (GPTMTBMATCHR)

Timer0 base: 0x4003.0000
Timer1 base: 0x4003.1000
Timer2 base: 0x4003.2000
Timer3 base: 0x4003.3000
Offset 0x034
Type R/W, reset 0x0000.FFFF

	31	30	29	28	27	26	25	24	23	22	21	20	19	18	17	16
	reserved															
Type	RO	RO	RO	RO	RO	RO	RO	RO	RO	RO	RO	RO	RO	RO	RO	RO
Reset	0	0	0	0	0	0	0	0	0	0	0	0	0	0	0	0

	15	14	13	12	11	10	9	8	7	6	5	4	3	2	1	0
	TBMRL															
Type	R/W	R/W	R/W	R/W	R/W	R/W	R/W	R/W	R/W	R/W	R/W	R/W	R/W	R/W	R/W	R/W
Reset	1	1	1	1	1	1	1	1	1	1	1	1	1	1	1	1

Bit/Field	Name	Type	Reset	Description
31:16	reserved	RO	0x0000	Software should not rely on the value of a reserved bit. To provide compatibility with future products, the value of a reserved bit should be preserved across a read-modify-write operation.
15:0	TBMRL	R/W	0xFFFF	GPTM TimerB Match Register Low When configured for PWM mode, this value along with **GPTMTBILR**, determines the duty cycle of the output PWM signal. When configured for Edge Count mode, this value along with **GPTMTBILR**, determines how many edge events are counted. The total number of edge events counted is equal to the value in **GPTMTBILR** minus this value.

Register 13: GPTM TimerA Prescale (GPTMTAPR), offset 0x038

This register allows software to extend the range of the 16-bit timers when operating in one-shot or periodic mode.

GPTM TimerA Prescale (GPTMTAPR)

Timer0 base: 0x4003.0000
Timer1 base: 0x4003.1000
Timer2 base: 0x4003.2000
Timer3 base: 0x4003.3000
Offset 0x038
Type R/W, reset 0x0000.0000

	31	30	29	28	27	26	25	24	23	22	21	20	19	18	17	16
	reserved															
Type	RO	RO	RO	RO	RO	RO	RO	RO	RO	RO	RO	RO	RO	RO	RO	RO
Reset	0	0	0	0	0	0	0	0	0	0	0	0	0	0	0	0

	15	14	13	12	11	10	9	8	7	6	5	4	3	2	1	0
	reserved								TAPSR							
Type	RO	RO	RO	RO	RO	RO	RO	RO	R/W	R/W	R/W	R/W	R/W	R/W	R/W	R/W
Reset	0	0	0	0	0	0	0	0	0	0	0	0	0	0	0	0

Bit/Field	Name	Type	Reset	Description
31:8	reserved	RO	0x00	Software should not rely on the value of a reserved bit. To provide compatibility with future products, the value of a reserved bit should be preserved across a read-modify-write operation.
7:0	TAPSR	R/W	0x00	GPTM TimerA Prescale The register loads this value on a write. A read returns the current value of the register. Refer to Table 10-2 on page 226 for more details and an example.

Register 14: GPTM TimerB Prescale (GPTMTBPR), offset 0x03C

This register allows software to extend the range of the 16-bit timers when operating in one-shot or periodic mode.

GPTM TimerB Prescale (GPTMTBPR)

Timer0 base: 0x4003.0000
Timer1 base: 0x4003.1000
Timer2 base: 0x4003.2000
Timer3 base: 0x4003.3000
Offset 0x03C
Type R/W, reset 0x0000.0000

	31	30	29	28	27	26	25	24	23	22	21	20	19	18	17	16
	reserved															
Type	RO	RO	RO	RO	RO	RO	RO	RO	RO	RO	RO	RO	RO	RO	RO	RO
Reset	0	0	0	0	0	0	0	0	0	0	0	0	0	0	0	0

	15	14	13	12	11	10	9	8	7	6	5	4	3	2	1	0
	reserved								TBPSR							
Type	RO	RO	RO	RO	RO	RO	RO	RO	R/W	R/W	R/W	R/W	R/W	R/W	R/W	R/W
Reset	0	0	0	0	0	0	0	0	0	0	0	0	0	0	0	0

Bit/Field	Name	Type	Reset	Description
31:8	reserved	RO	0x00	Software should not rely on the value of a reserved bit. To provide compatibility with future products, the value of a reserved bit should be preserved across a read-modify-write operation.
7:0	TBPSR	R/W	0x00	GPTM TimerB Prescale The register loads this value on a write. A read returns the current value of this register. Refer to Table 10-2 on page 226 for more details and an example.

Register 15: GPTM TimerA Prescale Match (GPTMTAPMR), offset 0x040

This register effectively extends the range of **GPTMTAMATCHR** to 24 bits when operating in 16-bit one-shot or periodic mode.

GPTM TimerA Prescale Match (GPTMTAPMR)

Timer0 base: 0x4003.0000
Timer1 base: 0x4003.1000
Timer2 base: 0x4003.2000
Timer3 base: 0x4003.3000
Offset 0x040
Type R/W, reset 0x0000.0000

	31	30	29	28	27	26	25	24	23	22	21	20	19	18	17	16
	reserved															
Type	RO	RO	RO	RO	RO	RO	RO	RO	RO	RO	RO	RO	RO	RO	RO	RO
Reset	0	0	0	0	0	0	0	0	0	0	0	0	0	0	0	0

	15	14	13	12	11	10	9	8	7	6	5	4	3	2	1	0
	reserved								TAPSMR							
Type	RO	RO	RO	RO	RO	RO	RO	RO	R/W	R/W	R/W	R/W	R/W	R/W	R/W	R/W
Reset	0	0	0	0	0	0	0	0	0	0	0	0	0	0	0	0

Bit/Field	Name	Type	Reset	Description
31:8	reserved	RO	0x00	Software should not rely on the value of a reserved bit. To provide compatibility with future products, the value of a reserved bit should be preserved across a read-modify-write operation.
7:0	TAPSMR	R/W	0x00	GPTM TimerA Prescale Match This value is used alongside **GPTMTAMATCHR** to detect timer match events while using a prescaler.

Register 16: GPTM TimerB Prescale Match (GPTMTBPMR), offset 0x044

This register effectively extends the range of **GPTMTBMATCHR** to 24 bits when operating in 16-bit one-shot or periodic mode.

GPTM TimerB Prescale Match (GPTMTBPMR)

Timer0 base: 0x4003.0000
Timer1 base: 0x4003.1000
Timer2 base: 0x4003.2000
Timer3 base: 0x4003.3000
Offset 0x044
Type R/W, reset 0x0000.0000

	31	30	29	28	27	26	25	24	23	22	21	20	19	18	17	16
	reserved															
Type	RO	RO	RO	RO	RO	RO	RO	RO	RO	RO	RO	RO	RO	RO	RO	RO
Reset	0	0	0	0	0	0	0	0	0	0	0	0	0	0	0	0

	15	14	13	12	11	10	9	8	7	6	5	4	3	2	1	0
	reserved								TBPSMR							
Type	RO	RO	RO	RO	RO	RO	RO	RO	R/W	R/W	R/W	R/W	R/W	R/W	R/W	R/W
Reset	0	0	0	0	0	0	0	0	0	0	0	0	0	0	0	0

Bit/Field	Name	Type	Reset	Description
31:8	reserved	RO	0x00	Software should not rely on the value of a reserved bit. To provide compatibility with future products, the value of a reserved bit should be preserved across a read-modify-write operation.
7:0	TBPSMR	R/W	0x00	GPTM TimerB Prescale Match This value is used alongside **GPTMTBMATCHR** to detect timer match events while using a prescaler.

Register 17: GPTM TimerA (GPTMTAR), offset 0x048

This register shows the current value of the TimerA counter in all cases except for Input Edge Count mode. When in this mode, this register contains the time at which the last edge event took place.

GPTM TimerA (GPTMTAR)

Timer0 base: 0x4003.0000
Timer1 base: 0x4003.1000
Timer2 base: 0x4003.2000
Timer3 base: 0x4003.3000
Offset 0x048
Type RO, reset 0x0000.FFFF (16-bit mode) and 0xFFFF.FFFF (32-bit mode)

	31	30	29	28	27	26	25	24	23	22	21	20	19	18	17	16
	TARH															
Type	RO	RO	RO	RO	RO	RO	RO	RO	RO	RO	RO	RO	RO	RO	RO	RO
Reset	0	1	1	0	1	0	1	1	1	1	0	1	1	1	1	0

	15	14	13	12	11	10	9	8	7	6	5	4	3	2	1	0
	TARL															
Type	RO	RO	RO	RO	RO	RO	RO	RO	RO	RO	RO	RO	RO	RO	RO	RO
Reset	1	1	1	1	1	1	1	1	1	1	1	1	1	1	1	1

Bit/Field	Name	Type	Reset	Description
31:16	TARH	RO	0xFFFF (32-bit mode) 0x0000 (16-bit mode)	GPTM TimerA Register High If the **GPTMCFG** is in a 32-bit mode, TimerB value is read. If the **GPTMCFG** is in a 16-bit mode, this is read as zero.
15:0	TARL	RO	0xFFFF	GPTM TimerA Register Low A read returns the current value of the **GPTM TimerA Count Register**, except in Input Edge Count mode, when it returns the timestamp from the last edge event.

Register 18: GPTM TimerB (GPTMTBR), offset 0x04C

This register shows the current value of the TimerB counter in all cases except for Input Edge Count mode. When in this mode, this register contains the time at which the last edge event took place.

GPTM TimerB (GPTMTBR)

Timer0 base: 0x4003.0000
Timer1 base: 0x4003.1000
Timer2 base: 0x4003.2000
Timer3 base: 0x4003.3000
Offset 0x04C
Type RO, reset 0x0000.FFFF

	31	30	29	28	27	26	25	24	23	22	21	20	19	18	17	16
	reserved															
Type	RO	RO	RO	RO	RO	RO	RO	RO	RO	RO	RO	RO	RO	RO	RO	RO
Reset	0	0	0	0	0	0	0	0	0	0	0	0	0	0	0	0

	15	14	13	12	11	10	9	8	7	6	5	4	3	2	1	0
	TBRL															
Type	RO	RO	RO	RO	RO	RO	RO	RO	RO	RO	RO	RO	RO	RO	RO	RO
Reset	1	1	1	1	1	1	1	1	1	1	1	1	1	1	1	1

Bit/Field	Name	Type	Reset	Description
31:16	reserved	RO	0x0000	Software should not rely on the value of a reserved bit. To provide compatibility with future products, the value of a reserved bit should be preserved across a read-modify-write operation.
15:0	TBRL	RO	0xFFFF	GPTM TimerB A read returns the current value of the **GPTM TimerB Count Register**, except in Input Edge Count mode, when it returns the timestamp from the last edge event.

11 Watchdog Timer

A watchdog timer can generate nonmaskable interrupts (NMIs) or a reset when a time-out value is reached. The watchdog timer is used to regain control when a system has failed due to a software error or due to the failure of an external device to respond in the expected way.

The Stellaris® Watchdog Timer module has the following features:

- 32-bit down counter with a programmable load register
- Separate watchdog clock with an enable
- Programmable interrupt generation logic with interrupt masking
- Lock register protection from runaway software
- Reset generation logic with an enable/disable
- User-enabled stalling when the controller asserts the CPU Halt flag during debug

The Watchdog Timer can be configured to generate an interrupt to the controller on its first time-out, and to generate a reset signal on its second time-out. Once the Watchdog Timer has been configured, the lock register can be written to prevent the timer configuration from being inadvertently altered.

11.1 Block Diagram

Figure 11-1. WDT Module Block Diagram

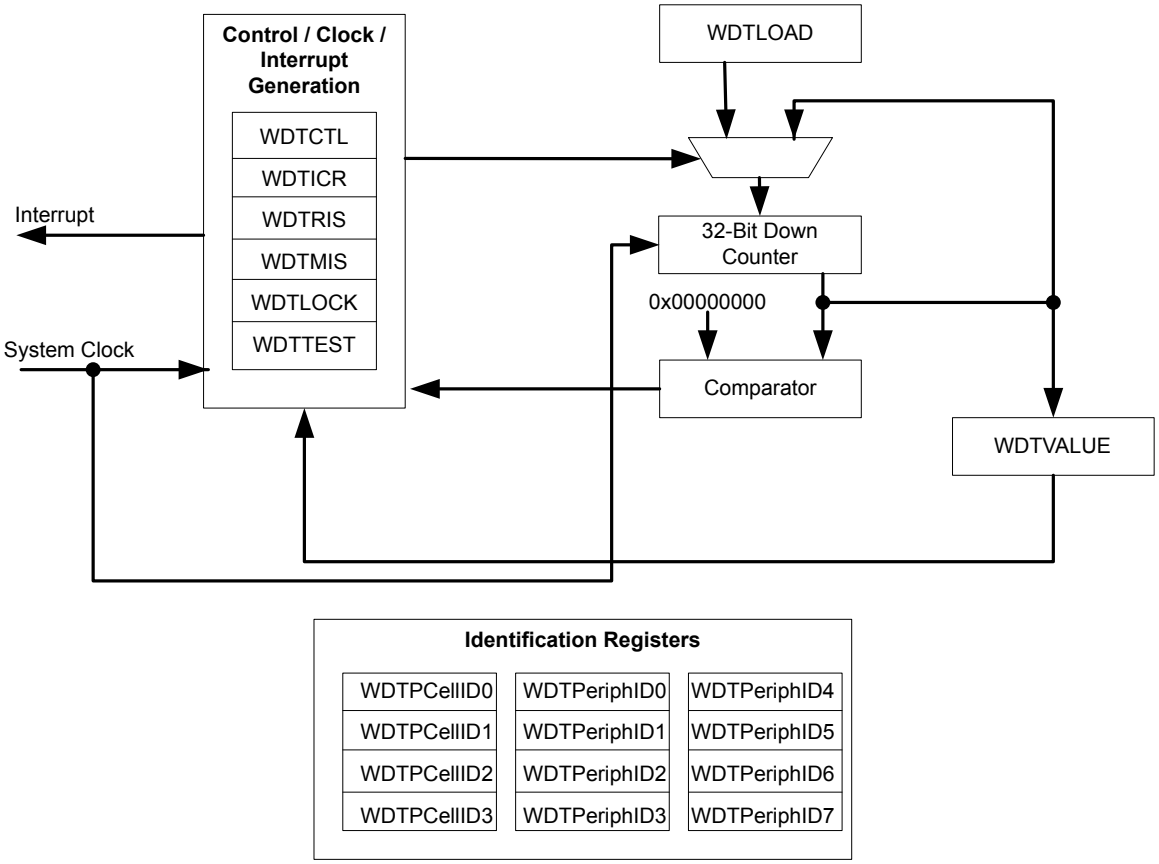

11.2 Functional Description

The Watchdog Timer module generates the first time-out signal when the 32-bit counter reaches the zero state after being enabled; enabling the counter also enables the watchdog timer interrupt. After the first time-out event, the 32-bit counter is re-loaded with the value of the **Watchdog Timer Load (WDTLOAD)** register, and the timer resumes counting down from that value. Once the Watchdog Timer has been configured, the **Watchdog Timer Lock (WDTLOCK)** register is written, which prevents the timer configuration from being inadvertently altered by software.

If the timer counts down to its zero state again before the first time-out interrupt is cleared, and the reset signal has been enabled (via the `WatchdogResetEnable` function), the Watchdog timer asserts its reset signal to the system. If the interrupt is cleared before the 32-bit counter reaches its second time-out, the 32-bit counter is loaded with the value in the **WDTLOAD** register, and counting resumes from that value.

If **WDTLOAD** is written with a new value while the Watchdog Timer counter is counting, then the counter is loaded with the new value and continues counting.

Writing to **WDTLOAD** does not clear an active interrupt. An interrupt must be specifically cleared by writing to the **Watchdog Interrupt Clear (WDTICR)** register.

The Watchdog module interrupt and reset generation can be enabled or disabled as required. When the interrupt is re-enabled, the 32-bit counter is preloaded with the load register value and not its last state.

11.3 Initialization and Configuration

To use the WDT, its peripheral clock must be enabled by setting the `WDT` bit in the **RCGC0** register. The Watchdog Timer is configured using the following sequence:

1. Load the **WDTLOAD** register with the desired timer load value.
2. If the Watchdog is configured to trigger system resets, set the `RESEN` bit in the **WDTCTL** register.
3. Set the `INTEN` bit in the **WDTCTL** register to enable the Watchdog and lock the control register.

If software requires that all of the watchdog registers are locked, the Watchdog Timer module can be fully locked by writing any value to the **WDTLOCK** register. To unlock the Watchdog Timer, write a value of 0x1ACC.E551.

11.4 Register Map

Table 11-1 on page 260 lists the Watchdog registers. The offset listed is a hexadecimal increment to the register's address, relative to the Watchdog Timer base address of 0x4000.0000.

Table 11-1. Watchdog Timer Register Map

Offset	Name	Type	Reset	Description	See page
0x000	WDTLOAD	R/W	0xFFFF.FFFF	Watchdog Load	262
0x004	WDTVALUE	RO	0xFFFF.FFFF	Watchdog Value	263
0x008	WDTCTL	R/W	0x0000.0000	Watchdog Control	264
0x00C	WDTICR	WO	-	Watchdog Interrupt Clear	265
0x010	WDTRIS	RO	0x0000.0000	Watchdog Raw Interrupt Status	266
0x014	WDTMIS	RO	0x0000.0000	Watchdog Masked Interrupt Status	267
0x418	WDTTEST	R/W	0x0000.0000	Watchdog Test	268
0xC00	WDTLOCK	R/W	0x0000.0000	Watchdog Lock	269
0xFD0	WDTPeriphID4	RO	0x0000.0000	Watchdog Peripheral Identification 4	270
0xFD4	WDTPeriphID5	RO	0x0000.0000	Watchdog Peripheral Identification 5	271
0xFD8	WDTPeriphID6	RO	0x0000.0000	Watchdog Peripheral Identification 6	272
0xFDC	WDTPeriphID7	RO	0x0000.0000	Watchdog Peripheral Identification 7	273
0xFE0	WDTPeriphID0	RO	0x0000.0005	Watchdog Peripheral Identification 0	274
0xFE4	WDTPeriphID1	RO	0x0000.0018	Watchdog Peripheral Identification 1	275
0xFE8	WDTPeriphID2	RO	0x0000.0018	Watchdog Peripheral Identification 2	276

Offset	Name	Type	Reset	Description	See page
0xFEC	WDTPeriphID3	RO	0x0000.0001	Watchdog Peripheral Identification 3	277
0xFF0	WDTPCellID0	RO	0x0000.000D	Watchdog PrimeCell Identification 0	278
0xFF4	WDTPCellID1	RO	0x0000.00F0	Watchdog PrimeCell Identification 1	279
0xFF8	WDTPCellID2	RO	0x0000.0005	Watchdog PrimeCell Identification 2	280
0xFFC	WDTPCellID3	RO	0x0000.00B1	Watchdog PrimeCell Identification 3	281

11.5 Register Descriptions

The remainder of this section lists and describes the WDT registers, in numerical order by address offset.

Register 1: Watchdog Load (WDTLOAD), offset 0x000

This register is the 32-bit interval value used by the 32-bit counter. When this register is written, the value is immediately loaded and the counter restarts counting down from the new value. If the **WDTLOAD** register is loaded with 0x0000.0000, an interrupt is immediately generated.

Watchdog Load (WDTLOAD)

Base 0x4000.0000
Offset 0x000
Type R/W, reset 0xFFFF.FFFF

	31	30	29	28	27	26	25	24	23	22	21	20	19	18	17	16
	WDTLoad															
Type	R/W	R/W	R/W	R/W	R/W	R/W	R/W	R/W	R/W	R/W	R/W	R/W	R/W	R/W	R/W	R/W
Reset	1	1	1	1	1	1	1	1	1	1	1	1	1	1	1	1

	15	14	13	12	11	10	9	8	7	6	5	4	3	2	1	0
	WDTLoad															
Type	R/W	R/W	R/W	R/W	R/W	R/W	R/W	R/W	R/W	R/W	R/W	R/W	R/W	R/W	R/W	R/W
Reset	1	1	1	1	1	1	1	1	1	1	1	1	1	1	1	1

Bit/Field	Name	Type	Reset	Description
31:0	WDTLoad	R/W	0xFFFF.FFFF	Watchdog Load Value

Register 2: Watchdog Value (WDTVALUE), offset 0x004

This register contains the current count value of the timer.

Watchdog Value (WDTVALUE)

Base 0x4000.0000
Offset 0x004
Type RO, reset 0xFFFF.FFFF

	31	30	29	28	27	26	25	24	23	22	21	20	19	18	17	16
	WDTValue															
Type	RO	RO	RO	RO	RO	RO	RO	RO	RO	RO	RO	RO	RO	RO	RO	RO
Reset	1	1	1	1	1	1	1	1	1	1	1	1	1	1	1	1

	15	14	13	12	11	10	9	8	7	6	5	4	3	2	1	0
	WDTValue															
Type	RO	RO	RO	RO	RO	RO	RO	RO	RO	RO	RO	RO	RO	RO	RO	RO
Reset	1	1	1	1	1	1	1	1	1	1	1	1	1	1	1	1

Bit/Field	Name	Type	Reset	Description
31:0	WDTValue	RO	0xFFFF.FFFF	Watchdog Value Current value of the 32-bit down counter.

Register 3: Watchdog Control (WDTCTL), offset 0x008

This register is the watchdog control register. The watchdog timer can be configured to generate a reset signal (on second time-out) or an interrupt on time-out.

When the watchdog interrupt has been enabled, all subsequent writes to the control register are ignored. The only mechanism that can re-enable writes is a hardware reset.

Watchdog Control (WDTCTL)

Base 0x4000.0000
Offset 0x008
Type R/W, reset 0x0000.0000

	31	30	29	28	27	26	25	24	23	22	21	20	19	18	17	16
	reserved															
Type	RO	RO	RO	RO	RO	RO	RO	RO	RO	RO	RO	RO	RO	RO	RO	RO
Reset	0	0	0	0	0	0	0	0	0	0	0	0	0	0	0	0

	15	14	13	12	11	10	9	8	7	6	5	4	3	2	1	0
	reserved														RESEN	INTEN
Type	RO	RO	RO	RO	RO	RO	RO	RO	RO	RO	RO	RO	RO	RO	R/W	R/W
Reset	0	0	0	0	0	0	0	0	0	0	0	0	0	0	0	0

Bit/Field	Name	Type	Reset	Description
31:2	reserved	RO	0x00	Software should not rely on the value of a reserved bit. To provide compatibility with future products, the value of a reserved bit should be preserved across a read-modify-write operation.
1	RESEN	R/W	0	Watchdog Reset Enable The `RESEN` values are defined as follows: Value Description 0 Disabled. 1 Enable the Watchdog module reset output.
0	INTEN	R/W	0	Watchdog Interrupt Enable The `INTEN` values are defined as follows: Value Description 0 Interrupt event disabled (once this bit is set, it can only be cleared by a hardware reset). 1 Interrupt event enabled. Once enabled, all writes are ignored.

Register 4: Watchdog Interrupt Clear (WDTICR), offset 0x00C

This register is the interrupt clear register. A write of any value to this register clears the Watchdog interrupt and reloads the 32-bit counter from the **WDTLOAD** register. Value for a read or reset is indeterminate.

Watchdog Interrupt Clear (WDTICR)

Base 0x4000.0000
Offset 0x00C
Type WO, reset -

	31	30	29	28	27	26	25	24	23	22	21	20	19	18	17	16
	WDTIntClr															
Type	WO	WO	WO	WO	WO	WO	WO	WO	WO	WO	WO	WO	WO	WO	WO	WO
Reset	-	-	-	-	-	-	-	-	-	-	-	-	-	-	-	-

	15	14	13	12	11	10	9	8	7	6	5	4	3	2	1	0
	WDTIntClr															
Type	WO	WO	WO	WO	WO	WO	WO	WO	WO	WO	WO	WO	WO	WO	WO	WO
Reset	-	-	-	-	-	-	-	-	-	-	-	-	-	-	-	-

Bit/Field	Name	Type	Reset	Description
31:0	WDTIntClr	WO	-	Watchdog Interrupt Clear

Register 5: Watchdog Raw Interrupt Status (WDTRIS), offset 0x010

This register is the raw interrupt status register. Watchdog interrupt events can be monitored via this register if the controller interrupt is masked.

Watchdog Raw Interrupt Status (WDTRIS)

Base 0x4000.0000
Offset 0x010
Type RO, reset 0x0000.0000

	31	30	29	28	27	26	25	24	23	22	21	20	19	18	17	16
	reserved															
Type	RO	RO	RO	RO	RO	RO	RO	RO	RO	RO	RO	RO	RO	RO	RO	RO
Reset	0	0	0	0	0	0	0	0	0	0	0	0	0	0	0	0

	15	14	13	12	11	10	9	8	7	6	5	4	3	2	1	0
	reserved															WDTRIS
Type	RO	RO	RO	RO	RO	RO	RO	RO	RO	RO	RO	RO	RO	RO	RO	RO
Reset	0	0	0	0	0	0	0	0	0	0	0	0	0	0	0	0

Bit/Field	Name	Type	Reset	Description
31:1	reserved	RO	0x00	Software should not rely on the value of a reserved bit. To provide compatibility with future products, the value of a reserved bit should be preserved across a read-modify-write operation.
0	WDTRIS	RO	0	Watchdog Raw Interrupt Status Gives the raw interrupt state (prior to masking) of **WDTINTR**.

Register 6: Watchdog Masked Interrupt Status (WDTMIS), offset 0x014

This register is the masked interrupt status register. The value of this register is the logical AND of the raw interrupt bit and the Watchdog interrupt enable bit.

Watchdog Masked Interrupt Status (WDTMIS)

Base 0x4000.0000
Offset 0x014
Type RO, reset 0x0000.0000

	31	30	29	28	27	26	25	24	23	22	21	20	19	18	17	16
	reserved															
Type	RO	RO	RO	RO	RO	RO	RO	RO	RO	RO	RO	RO	RO	RO	RO	RO
Reset	0	0	0	0	0	0	0	0	0	0	0	0	0	0	0	0

	15	14	13	12	11	10	9	8	7	6	5	4	3	2	1	0
	reserved															WDTMIS
Type	RO	RO	RO	RO	RO	RO	RO	RO	RO	RO	RO	RO	RO	RO	RO	RO
Reset	0	0	0	0	0	0	0	0	0	0	0	0	0	0	0	0

Bit/Field	Name	Type	Reset	Description
31:1	reserved	RO	0x00	Software should not rely on the value of a reserved bit. To provide compatibility with future products, the value of a reserved bit should be preserved across a read-modify-write operation.
0	WDTMIS	RO	0	Watchdog Masked Interrupt Status Gives the masked interrupt state (after masking) of the **WDTINTR** interrupt.

Register 7: Watchdog Test (WDTTEST), offset 0x418

This register provides user-enabled stalling when the microcontroller asserts the CPU halt flag during debug.

Watchdog Test (WDTTEST)

Base 0x4000.0000
Offset 0x418
Type R/W, reset 0x0000.0000

	31	30	29	28	27	26	25	24	23	22	21	20	19	18	17	16
	reserved															
Type	RO	RO	RO	RO	RO	RO	RO	RO	RO	RO	RO	RO	RO	RO	RO	RO
Reset	0	0	0	0	0	0	0	0	0	0	0	0	0	0	0	0

	15	14	13	12	11	10	9	8	7	6	5	4	3	2	1	0
	reserved							STALL	reserved							
Type	RO	RO	RO	RO	RO	RO	RO	R/W	RO	RO	RO	RO	RO	RO	RO	RO
Reset	0	0	0	0	0	0	0	0	0	0	0	0	0	0	0	0

Bit/Field	Name	Type	Reset	Description
31:9	reserved	RO	0x00	Software should not rely on the value of a reserved bit. To provide compatibility with future products, the value of a reserved bit should be preserved across a read-modify-write operation.
8	STALL	R/W	0	Watchdog Stall Enable When set to 1, if the Stellaris® microcontroller is stopped with a debugger, the watchdog timer stops counting. Once the microcontroller is restarted, the watchdog timer resumes counting.
7:0	reserved	RO	0x00	Software should not rely on the value of a reserved bit. To provide compatibility with future products, the value of a reserved bit should be preserved across a read-modify-write operation.

Register 8: Watchdog Lock (WDTLOCK), offset 0xC00

Writing 0x1ACC.E551 to the **WDTLOCK** register enables write access to all other registers. Writing any other value to the **WDTLOCK** register re-enables the locked state for register writes to all the other registers. Reading the **WDTLOCK** register returns the lock status rather than the 32-bit value written. Therefore, when write accesses are disabled, reading the **WDTLOCK** register returns 0x0000.0001 (when locked; otherwise, the returned value is 0x0000.0000 (unlocked)).

Watchdog Lock (WDTLOCK)

Base 0x4000.0000
Offset 0xC00
Type R/W, reset 0x0000.0000

	31	30	29	28	27	26	25	24	23	22	21	20	19	18	17	16
	WDTLock															
Type	R/W	R/W	R/W	R/W	R/W	R/W	R/W	R/W	R/W	R/W	R/W	R/W	R/W	R/W	R/W	R/W
Reset	0	0	0	0	0	0	0	0	0	0	0	0	0	0	0	0

	15	14	13	12	11	10	9	8	7	6	5	4	3	2	1	0
	WDTLock															
Type	R/W	R/W	R/W	R/W	R/W	R/W	R/W	R/W	R/W	R/W	R/W	R/W	R/W	R/W	R/W	R/W
Reset	0	0	0	0	0	0	0	0	0	0	0	0	0	0	0	0

Bit/Field	Name	Type	Reset	Description
31:0	WDTLock	R/W	0x0000	Watchdog Lock A write of the value 0x1ACC.E551 unlocks the watchdog registers for write access. A write of any other value reapplies the lock, preventing any register updates. A read of this register returns the following values: Value — Description 0x0000.0001 — Locked 0x0000.0000 — Unlocked

Register 9: Watchdog Peripheral Identification 4 (WDTPeriphID4), offset 0xFD0

The **WDTPeriphIDn** registers are hard-coded and the fields within the register determine the reset value.

Watchdog Peripheral Identification 4 (WDTPeriphID4)

Base 0x4000.0000
Offset 0xFD0
Type RO, reset 0x0000.0000

	31	30	29	28	27	26	25	24	23	22	21	20	19	18	17	16
	reserved															
Type	RO	RO	RO	RO	RO	RO	RO	RO	RO	RO	RO	RO	RO	RO	RO	RO
Reset	0	0	0	0	0	0	0	0	0	0	0	0	0	0	0	0

	15	14	13	12	11	10	9	8	7	6	5	4	3	2	1	0
	reserved								PID4							
Type	RO	RO	RO	RO	RO	RO	RO	RO	RO	RO	RO	RO	RO	RO	RO	RO
Reset	0	0	0	0	0	0	0	0	0	0	0	0	0	0	0	0

Bit/Field	Name	Type	Reset	Description
31:8	reserved	RO	0x00	Software should not rely on the value of a reserved bit. To provide compatibility with future products, the value of a reserved bit should be preserved across a read-modify-write operation.
7:0	PID4	RO	0x00	WDT Peripheral ID Register[7:0]

Register 10: Watchdog Peripheral Identification 5 (WDTPeriphID5), offset 0xFD4

The **WDTPeriphIDn** registers are hard-coded and the fields within the register determine the reset value.

Watchdog Peripheral Identification 5 (WDTPeriphID5)

Base 0x4000.0000
Offset 0xFD4
Type RO, reset 0x0000.0000

	31	30	29	28	27	26	25	24	23	22	21	20	19	18	17	16
	reserved															
Type	RO	RO	RO	RO	RO	RO	RO	RO	RO	RO	RO	RO	RO	RO	RO	RO
Reset	0	0	0	0	0	0	0	0	0	0	0	0	0	0	0	0

	15	14	13	12	11	10	9	8	7	6	5	4	3	2	1	0
	reserved								PID5							
Type	RO	RO	RO	RO	RO	RO	RO	RO	RO	RO	RO	RO	RO	RO	RO	RO
Reset	0	0	0	0	0	0	0	0	0	0	0	0	0	0	0	0

Bit/Field	Name	Type	Reset	Description
31:8	reserved	RO	0x00	Software should not rely on the value of a reserved bit. To provide compatibility with future products, the value of a reserved bit should be preserved across a read-modify-write operation.
7:0	PID5	RO	0x00	WDT Peripheral ID Register[15:8]

Register 11: Watchdog Peripheral Identification 6 (WDTPeriphID6), offset 0xFD8

The **WDTPeriphIDn** registers are hard-coded and the fields within the register determine the reset value.

Watchdog Peripheral Identification 6 (WDTPeriphID6)

Base 0x4000.0000
Offset 0xFD8
Type RO, reset 0x0000.0000

	31	30	29	28	27	26	25	24	23	22	21	20	19	18	17	16
	reserved															
Type	RO	RO	RO	RO	RO	RO	RO	RO	RO	RO	RO	RO	RO	RO	RO	RO
Reset	0	0	0	0	0	0	0	0	0	0	0	0	0	0	0	0

	15	14	13	12	11	10	9	8	7	6	5	4	3	2	1	0
	reserved								PID6							
Type	RO	RO	RO	RO	RO	RO	RO	RO	RO	RO	RO	RO	RO	RO	RO	RO
Reset	0	0	0	0	0	0	0	0	0	0	0	0	0	0	0	0

Bit/Field	Name	Type	Reset	Description
31:8	reserved	RO	0x00	Software should not rely on the value of a reserved bit. To provide compatibility with future products, the value of a reserved bit should be preserved across a read-modify-write operation.
7:0	PID6	RO	0x00	WDT Peripheral ID Register[23:16]

Register 12: Watchdog Peripheral Identification 7 (WDTPeriphID7), offset 0xFDC

The **WDTPeriphIDn** registers are hard-coded and the fields within the register determine the reset value.

Watchdog Peripheral Identification 7 (WDTPeriphID7)

Base 0x4000.0000
Offset 0xFDC
Type RO, reset 0x0000.0000

	31	30	29	28	27	26	25	24	23	22	21	20	19	18	17	16
	reserved															
Type	RO	RO	RO	RO	RO	RO	RO	RO	RO	RO	RO	RO	RO	RO	RO	RO
Reset	0	0	0	0	0	0	0	0	0	0	0	0	0	0	0	0

	15	14	13	12	11	10	9	8	7	6	5	4	3	2	1	0
	reserved								PID7							
Type	RO	RO	RO	RO	RO	RO	RO	RO	RO	RO	RO	RO	RO	RO	RO	RO
Reset	0	0	0	0	0	0	0	0	0	0	0	0	0	0	0	0

Bit/Field	Name	Type	Reset	Description
31:8	reserved	RO	0x00	Software should not rely on the value of a reserved bit. To provide compatibility with future products, the value of a reserved bit should be preserved across a read-modify-write operation.
7:0	PID7	RO	0x00	WDT Peripheral ID Register[31:24]

Register 13: Watchdog Peripheral Identification 0 (WDTPeriphID0), offset 0xFE0

The **WDTPeriphIDn** registers are hard-coded and the fields within the register determine the reset value.

Watchdog Peripheral Identification 0 (WDTPeriphID0)

Base 0x4000.0000
Offset 0xFE0
Type RO, reset 0x0000.0005

	31	30	29	28	27	26	25	24	23	22	21	20	19	18	17	16
	reserved															
Type	RO	RO	RO	RO	RO	RO	RO	RO	RO	RO	RO	RO	RO	RO	RO	RO
Reset	0	0	0	0	0	0	0	0	0	0	0	0	0	0	0	0

	15	14	13	12	11	10	9	8	7	6	5	4	3	2	1	0
	reserved								PID0							
Type	RO	RO	RO	RO	RO	RO	RO	RO	RO	RO	RO	RO	RO	RO	RO	RO
Reset	0	0	0	0	0	0	0	0	0	0	0	0	0	1	0	1

Bit/Field	Name	Type	Reset	Description
31:8	reserved	RO	0x00	Software should not rely on the value of a reserved bit. To provide compatibility with future products, the value of a reserved bit should be preserved across a read-modify-write operation.
7:0	PID0	RO	0x05	Watchdog Peripheral ID Register[7:0]

Register 14: Watchdog Peripheral Identification 1 (WDTPeriphID1), offset 0xFE4

The **WDTPeriphIDn** registers are hard-coded and the fields within the register determine the reset value.

Watchdog Peripheral Identification 1 (WDTPeriphID1)

Base 0x4000.0000
Offset 0xFE4
Type RO, reset 0x0000.0018

	31	30	29	28	27	26	25	24	23	22	21	20	19	18	17	16
	reserved															
Type	RO	RO	RO	RO	RO	RO	RO	RO	RO	RO	RO	RO	RO	RO	RO	RO
Reset	0	0	0	0	0	0	0	0	0	0	0	0	0	0	0	0

	15	14	13	12	11	10	9	8	7	6	5	4	3	2	1	0
	reserved								PID1							
Type	RO	RO	RO	RO	RO	RO	RO	RO	RO	RO	RO	RO	RO	RO	RO	RO
Reset	0	0	0	0	0	0	0	0	0	0	0	1	1	0	0	0

Bit/Field	Name	Type	Reset	Description
31:8	reserved	RO	0x00	Software should not rely on the value of a reserved bit. To provide compatibility with future products, the value of a reserved bit should be preserved across a read-modify-write operation.
7:0	PID1	RO	0x18	Watchdog Peripheral ID Register[15:8]

Register 15: Watchdog Peripheral Identification 2 (WDTPeriphID2), offset 0xFE8

The **WDTPeriphIDn** registers are hard-coded and the fields within the register determine the reset value.

Watchdog Peripheral Identification 2 (WDTPeriphID2)

Base 0x4000.0000
Offset 0xFE8
Type RO, reset 0x0000.0018

	31	30	29	28	27	26	25	24	23	22	21	20	19	18	17	16
	reserved															
Type	RO	RO	RO	RO	RO	RO	RO	RO	RO	RO	RO	RO	RO	RO	RO	RO
Reset	0	0	0	0	0	0	0	0	0	0	0	0	0	0	0	0

	15	14	13	12	11	10	9	8	7	6	5	4	3	2	1	0
	reserved								PID2							
Type	RO	RO	RO	RO	RO	RO	RO	RO	RO	RO	RO	RO	RO	RO	RO	RO
Reset	0	0	0	0	0	0	0	0	0	0	0	1	1	0	0	0

Bit/Field	Name	Type	Reset	Description
31:8	reserved	RO	0x00	Software should not rely on the value of a reserved bit. To provide compatibility with future products, the value of a reserved bit should be preserved across a read-modify-write operation.
7:0	PID2	RO	0x18	Watchdog Peripheral ID Register[23:16]

Register 16: Watchdog Peripheral Identification 3 (WDTPeriphID3), offset 0xFEC

The **WDTPeriphIDn** registers are hard-coded and the fields within the register determine the reset value.

Watchdog Peripheral Identification 3 (WDTPeriphID3)

Base 0x4000.0000
Offset 0xFEC
Type RO, reset 0x0000.0001

	31	30	29	28	27	26	25	24	23	22	21	20	19	18	17	16
	reserved															
Type	RO	RO	RO	RO	RO	RO	RO	RO	RO	RO	RO	RO	RO	RO	RO	RO
Reset	0	0	0	0	0	0	0	0	0	0	0	0	0	0	0	0

	15	14	13	12	11	10	9	8	7	6	5	4	3	2	1	0
	reserved								PID3							
Type	RO	RO	RO	RO	RO	RO	RO	RO	RO	RO	RO	RO	RO	RO	RO	RO
Reset	0	0	0	0	0	0	0	0	0	0	0	0	0	0	0	1

Bit/Field	Name	Type	Reset	Description
31:8	reserved	RO	0x00	Software should not rely on the value of a reserved bit. To provide compatibility with future products, the value of a reserved bit should be preserved across a read-modify-write operation.
7:0	PID3	RO	0x01	Watchdog Peripheral ID Register[31:24]

Register 17: Watchdog PrimeCell Identification 0 (WDTPCellID0), offset 0xFF0

The **WDTPCellIDn** registers are hard-coded and the fields within the register determine the reset value.

Watchdog PrimeCell Identification 0 (WDTPCellID0)

Base 0x4000.0000
Offset 0xFF0
Type RO, reset 0x0000.000D

	31	30	29	28	27	26	25	24	23	22	21	20	19	18	17	16
	reserved															
Type	RO	RO	RO	RO	RO	RO	RO	RO	RO	RO	RO	RO	RO	RO	RO	RO
Reset	0	0	0	0	0	0	0	0	0	0	0	0	0	0	0	0

	15	14	13	12	11	10	9	8	7	6	5	4	3	2	1	0
	reserved								CID0							
Type	RO	RO	RO	RO	RO	RO	RO	RO	RO	RO	RO	RO	RO	RO	RO	RO
Reset	0	0	0	0	0	0	0	0	0	0	0	0	1	1	0	1

Bit/Field	Name	Type	Reset	Description
31:8	reserved	RO	0x00	Software should not rely on the value of a reserved bit. To provide compatibility with future products, the value of a reserved bit should be preserved across a read-modify-write operation.
7:0	CID0	RO	0x0D	Watchdog PrimeCell ID Register[7:0]

Register 18: Watchdog PrimeCell Identification 1 (WDTPCellID1), offset 0xFF4

The **WDTPCellIDn** registers are hard-coded and the fields within the register determine the reset value.

Watchdog PrimeCell Identification 1 (WDTPCellID1)

Base 0x4000.0000
Offset 0xFF4
Type RO, reset 0x0000.00F0

	31	30	29	28	27	26	25	24	23	22	21	20	19	18	17	16
	reserved															
Type	RO	RO	RO	RO	RO	RO	RO	RO	RO	RO	RO	RO	RO	RO	RO	RO
Reset	0	0	0	0	0	0	0	0	0	0	0	0	0	0	0	0

	15	14	13	12	11	10	9	8	7	6	5	4	3	2	1	0
	reserved								CID1							
Type	RO	RO	RO	RO	RO	RO	RO	RO	RO	RO	RO	RO	RO	RO	RO	RO
Reset	0	0	0	0	0	0	0	0	1	1	1	1	0	0	0	0

Bit/Field	Name	Type	Reset	Description
31:8	reserved	RO	0x00	Software should not rely on the value of a reserved bit. To provide compatibility with future products, the value of a reserved bit should be preserved across a read-modify-write operation.
7:0	CID1	RO	0xF0	Watchdog PrimeCell ID Register[15:8]

Register 19: Watchdog PrimeCell Identification 2 (WDTPCellID2), offset 0xFF8

The **WDTPCellIDn** registers are hard-coded and the fields within the register determine the reset value.

Watchdog PrimeCell Identification 2 (WDTPCellID2)

Base 0x4000.0000
Offset 0xFF8
Type RO, reset 0x0000.0005

	31	30	29	28	27	26	25	24	23	22	21	20	19	18	17	16
	reserved															
Type	RO	RO	RO	RO	RO	RO	RO	RO	RO	RO	RO	RO	RO	RO	RO	RO
Reset	0	0	0	0	0	0	0	0	0	0	0	0	0	0	0	0

	15	14	13	12	11	10	9	8	7	6	5	4	3	2	1	0
	reserved								CID2							
Type	RO	RO	RO	RO	RO	RO	RO	RO	RO	RO	RO	RO	RO	RO	RO	RO
Reset	0	0	0	0	0	0	0	0	0	0	0	0	0	1	0	1

Bit/Field	Name	Type	Reset	Description
31:8	reserved	RO	0x00	Software should not rely on the value of a reserved bit. To provide compatibility with future products, the value of a reserved bit should be preserved across a read-modify-write operation.
7:0	CID2	RO	0x05	Watchdog PrimeCell ID Register[23:16]

Register 20: Watchdog PrimeCell Identification 3 (WDTPCellID3), offset 0xFFC

The **WDTPCellIDn** registers are hard-coded and the fields within the register determine the reset value.

Watchdog PrimeCell Identification 3 (WDTPCellID3)

Base 0x4000.0000
Offset 0xFFC
Type RO, reset 0x0000.00B1

	31	30	29	28	27	26	25	24	23	22	21	20	19	18	17	16
	reserved															
Type	RO	RO	RO	RO	RO	RO	RO	RO	RO	RO	RO	RO	RO	RO	RO	RO
Reset	0	0	0	0	0	0	0	0	0	0	0	0	0	0	0	0

	15	14	13	12	11	10	9	8	7	6	5	4	3	2	1	0
	reserved								CID3							
Type	RO	RO	RO	RO	RO	RO	RO	RO	RO	RO	RO	RO	RO	RO	RO	RO
Reset	0	0	0	0	0	0	0	0	1	0	1	1	0	0	0	1

Bit/Field	Name	Type	Reset	Description
31:8	reserved	RO	0x00	Software should not rely on the value of a reserved bit. To provide compatibility with future products, the value of a reserved bit should be preserved across a read-modify-write operation.
7:0	CID3	RO	0xB1	Watchdog PrimeCell ID Register[31:24]

12 Analog-to-Digital Converter (ADC)

An analog-to-digital converter (ADC) is a peripheral that converts a continuous analog voltage to a discrete digital number.

The Stellaris® ADC module features 10-bit conversion resolution and supports four input channels, plus an internal temperature sensor. The ADC module contains four programmable sequencer which allows for the sampling of multiple analog input sources without controller intervention. Each sample sequence provides flexible programming with fully configurable input source, trigger events, interrupt generation, and sequence priority.

The Stellaris® ADC module provides the following features:

- Four analog input channels
- Single-ended and differential-input configurations
- On-chip internal temperature sensor
- Sample rate of 500 thousand samples/second
- Flexible, configurable analog-to-digital conversion
- Four programmable sample conversion sequences from one to eight entries long, with corresponding conversion result FIFOs
- Flexible trigger control
  - Controller (software)
  - Timers
  - Analog Comparators
  - PWM
  - GPIO
- Hardware averaging of up to 64 samples for improved accuracy
- Converter uses an internal 3-V reference
- Power and ground for the analog circuitry is separate from the digital power and ground

12.1 Block Diagram

Figure 12-1 on page 283 provides details on the internal configuration of the ADC controls and data registers.

Figure 12-1. ADC Module Block Diagram

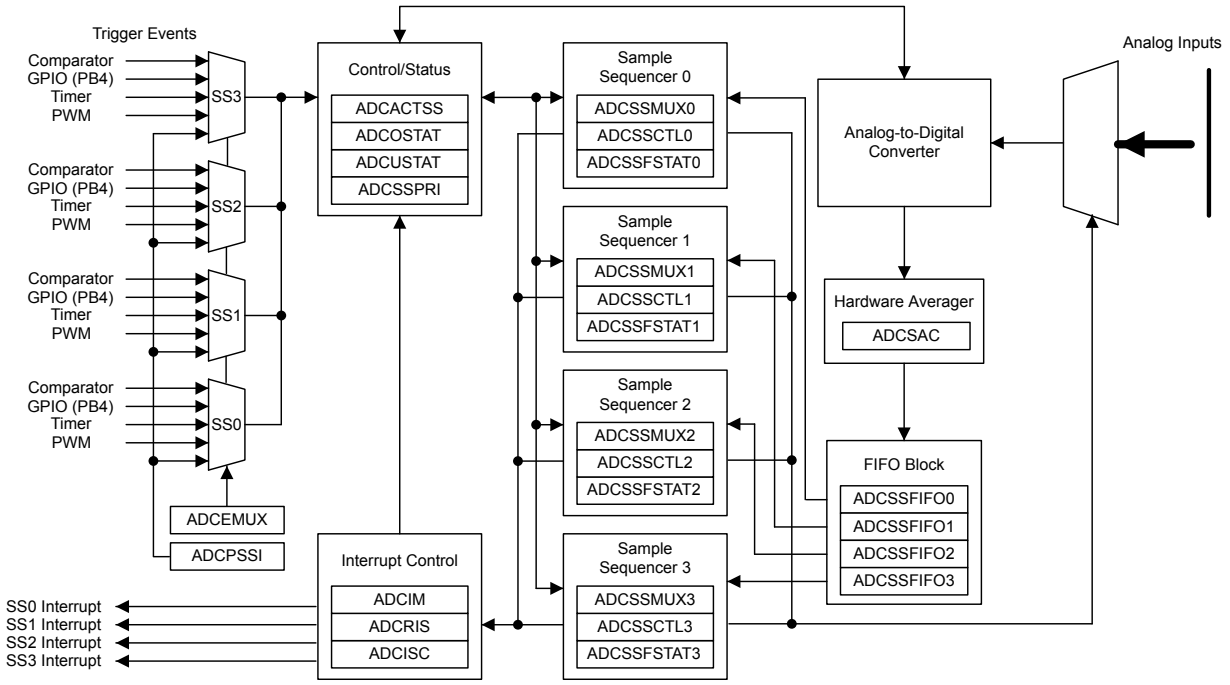

12.2 Functional Description

The Stellaris® ADC collects sample data by using a programmable sequence-based approach instead of the traditional single or double-sampling approaches found on many ADC modules. Each *sample sequence* is a fully programmed series of consecutive (back-to-back) samples, allowing the ADC to collect data from multiple input sources without having to be re-configured or serviced by the controller. The programming of each sample in the sample sequence includes parameters such as the input source and mode (differential versus single-ended input), interrupt generation on sample completion, and the indicator for the last sample in the sequence.

12.2.1 Sample Sequencers

The sampling control and data capture is handled by the sample sequencers. All of the sequencers are identical in implementation except for the number of samples that can be captured and the depth of the FIFO. Table 12-1 on page 283 shows the maximum number of samples that each sequencer can capture and its corresponding FIFO depth. In this implementation, each FIFO entry is a 32-bit word, with the lower 10 bits containing the conversion result.

Table 12-1. Samples and FIFO Depth of Sequencers

Sequencer	Number of Samples	Depth of FIFO
SS3	1	1
SS2	4	4
SS1	4	4
SS0	8	8

For a given sample sequence, each sample is defined by two 4-bit nibbles in the **ADC Sample Sequence Input Multiplexer Select (ADCSSMUXn)** and **ADC Sample Sequence Control**

(ADCSSCTLn) registers, where "n" corresponds to the sequence number. The **ADCSSMUXn** nibbles select the input pin, while the **ADCSSCTLn** nibbles contain the sample control bits corresponding to parameters such as temperature sensor selection, interrupt enable, end of sequence, and differential input mode. Sample sequencers are enabled by setting the respective `ASENn` bit in the **ADC Active Sample Sequencer (ADCACTSS)** register, and should be configured before being enabled.

When configuring a sample sequence, multiple uses of the same input pin within the same sequence is allowed. In the **ADCSSCTLn** register, the `IEn` bits can be set for any combination of samples, allowing interrupts to be generated after every sample in the sequence if necessary. Also, the `END` bit can be set at any point within a sample sequence. For example, if Sequencer 0 is used, the `END` bit can be set in the nibble associated with the fifth sample, allowing Sequencer 0 to complete execution of the sample sequence after the fifth sample.

After a sample sequence completes execution, the result data can be retrieved from the **ADC Sample Sequence Result FIFO (ADCSSFIFOn)** registers. The FIFOs are simple circular buffers that read a single address to "pop" result data. For software debug purposes, the positions of the FIFO head and tail pointers are visible in the **ADC Sample Sequence FIFO Status (ADCSSFSTATn)** registers along with `FULL` and `EMPTY` status flags. Overflow and underflow conditions are monitored using the **ADCOSTAT** and **ADCUSTAT** registers.

12.2.2 Module Control

Outside of the sample sequencers, the remainder of the control logic is responsible for tasks such as:

- Interrupt generation
- Sequence prioritization
- Trigger configuration

Most of the ADC control logic runs at the ADC clock rate of 14-18 MHz. The internal ADC divider is configured automatically by hardware when the system `XTAL` is selected. The automatic clock divider configuration targets 16.667 MHz operation for all Stellaris® devices.

12.2.2.1 Interrupts

The register configurations of the sample sequencers dictate which events generate raw interrupts, but do not have control over whether the interrupt is actually sent to the interrupt controller. The ADC module's interrupt signals are controlled by the state of the `MASK` bits in the **ADC Interrupt Mask (ADCIM)** register. Interrupt status can be viewed at two locations: the **ADC Raw Interrupt Status (ADCRIS)** register, which shows the raw status of the various interrupt signals, and the **ADC Interrupt Status and Clear (ADCISC)** register, which shows active interrupts that are enabled by the **ADCIM** register. Sequencer interrupts are cleared by writing a 1 to the corresponding `IN` bit in **ADCISC**.

12.2.2.2 Prioritization

When sampling events (triggers) happen concurrently, they are prioritized for processing by the values in the **ADC Sample Sequencer Priority (ADCSSPRI)** register. Valid priority values are in the range of 0-3, with 0 being the highest priority and 3 being the lowest. Multiple active sample sequencer units with the same priority do not provide consistent results, so software must ensure that all active sample sequencer units have a unique priority value.

12.2.2.3 Sampling Events

Sample triggering for each sample sequencer is defined in the **ADC Event Multiplexer Select (ADCEMUX)** register. The external peripheral triggering sources vary by Stellaris® family member, but all devices share the "Controller" and "Always" triggers. Software can initiate sampling by setting the SSx bits in the **ADC Processor Sample Sequence Initiate (ADCPSSI)** register.

Care must be taken when using the "Always" trigger. If a sequence's priority is too high, it is possible to starve other lower priority sequences.

12.2.3 Hardware Sample Averaging Circuit

Higher precision results can be generated using the hardware averaging circuit, however, the improved results are at the cost of throughput. Up to 64 samples can be accumulated and averaged to form a single data entry in the sequencer FIFO. Throughput is decreased proportionally to the number of samples in the averaging calculation. For example, if the averaging circuit is configured to average 16 samples, the throughput is decreased by a factor of 16.

By default the averaging circuit is off and all data from the converter passes through to the sequencer FIFO. The averaging hardware is controlled by the **ADC Sample Averaging Control (ADCSAC)** register (see page 304). There is a single averaging circuit and all input channels receive the same amount of averaging whether they are single-ended or differential.

12.2.4 Analog-to-Digital Converter

The converter itself generates a 10-bit output value for selected analog input. Special analog pads are used to minimize the distortion on the input. An internal 3 V reference is used by the converter resulting in sample values ranging from 0x000 at 0 V input to 0x3FF at 3 V input when in single-ended input mode.

12.2.5 Differential Sampling

In addition to traditional single-ended sampling, the ADC module supports differential sampling of two analog input channels. To enable differential sampling, software must set the Dn bit in the **ADCSSCTL0n** register in a step's configuration nibble.

When a sequence step is configured for differential sampling, its corresponding value in the **ADCSSMUXn** register must be set to one of the four differential pairs, numbered 0-3. Differential pair 0 samples analog inputs 0 and 1; differential pair 1 samples analog inputs 2 and 3; and so on (see Table 12-2 on page 285). The ADC does not support other differential pairings such as analog input 0 with analog input 3. The number of differential pairs supported is dependent on the number of analog inputs (see Table 12-2 on page 285).

Table 12-2. Differential Sampling Pairs

Differential Pair	Analog Inputs
0	0 and 1
1	2 and 3

The voltage sampled in differential mode is the difference between the odd and even channels:

ΔV (differential voltage) = V_{IN_EVEN} (even channels) – V_{IN_ODD} (odd channels), therefore:

- If $\Delta V = 0$, then the conversion result = 0x1FF
- If $\Delta V > 0$, then the conversion result > 0x1FF (range is 0x1FF–0x3FF)

- If $\Delta V < 0$, then the conversion result < 0x1FF (range is 0–0x1FF)

The differential pairs assign polarities to the analog inputs: the even-numbered input is always positive, and the odd-numbered input is always negative. In order for a valid conversion result to appear, the negative input must be in the range of ± 1.5 V of the positive input. If an analog input is greater than 3 V or less than 0 V (the valid range for analog inputs), the input voltage is clipped, meaning it appears as either 3 V or 0 V, respectively, to the ADC.

Figure 12-2 on page 286 shows an example of the negative input centered at 1.5 V. In this configuration, the differential range spans from -1.5 V to 1.5 V. Figure 12-3 on page 287 shows an example where the negative input is centered at -0.75 V, meaning inputs on the positive input saturate past a differential voltage of -0.75 V since the input voltage is less than 0 V. Figure 12-4 on page 287 shows an example of the negative input centered at 2.25 V, where inputs on the positive channel saturate past a differential voltage of 0.75 V since the input voltage would be greater than 3 V.

Figure 12-2. Differential Sampling Range, V_{IN_ODD} = 1.5 V

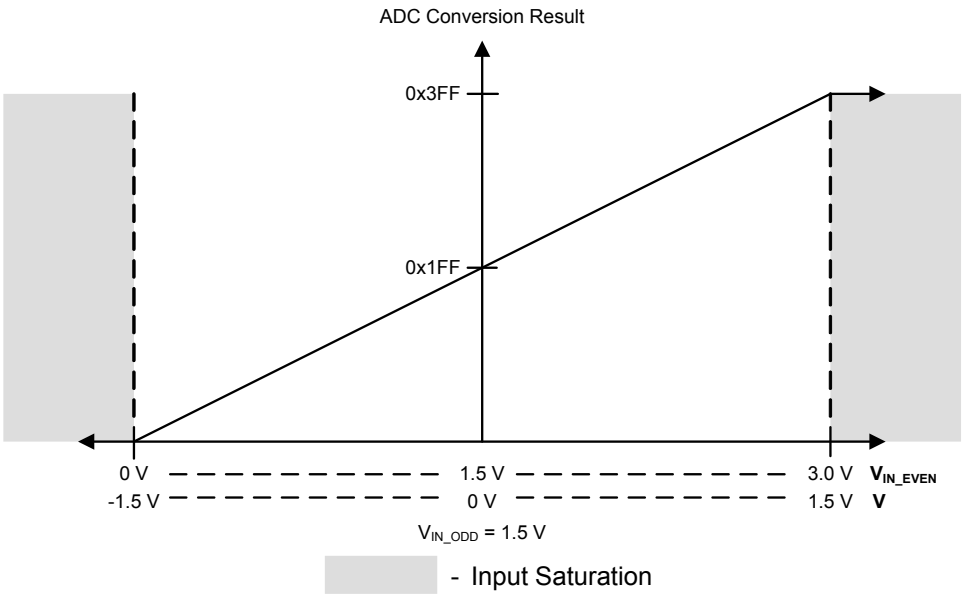

Figure 12-3. Differential Sampling Range, V_{IN_ODD} = 0.75 V

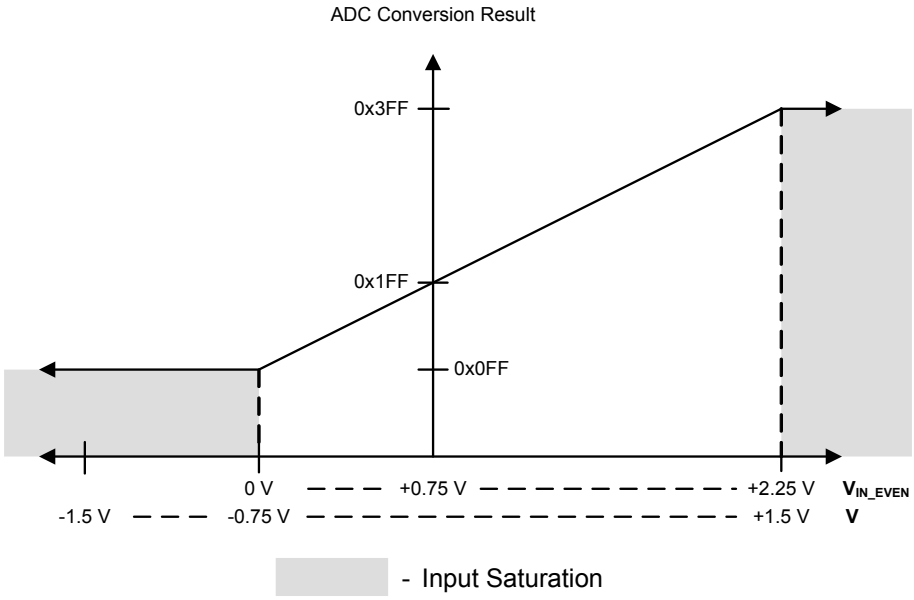

Figure 12-4. Differential Sampling Range, V_{IN_ODD} = 2.25 V

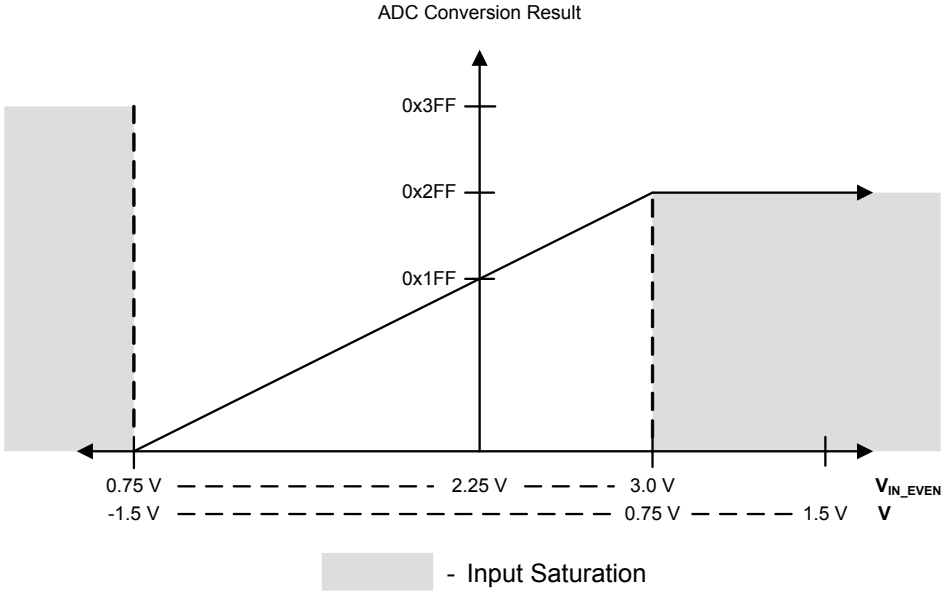

12.2.6 Test Modes

There is a user-available test mode that allows for loopback operation within the digital portion of the ADC module. This can be useful for debugging software without having to provide actual analog stimulus. This mode is available through the **ADC Test Mode Loopback (ADCTMLB)** register (see page 317).

12.2.7 Internal Temperature Sensor

The temperature sensor serves two primary purposes: 1) to notify the system that internal temperature is too high or low for reliable operation, and 2) to provide temperature measurements for calibration of the Hibernate module RTC trim value.

The temperature sensor does not have a separate enable, since it also contains the bandgap reference and must always be enabled. The reference is supplied to other analog modules; not just the ADC.

The internal temperature sensor provides an analog temperature reading as well as a reference voltage. The voltage at the output terminal SENSO is given by the following equation:

```
SENSO = 2.7 - ((T + 55) / 75)
```

This relation is shown in Figure 12-5 on page 288.

Figure 12-5. Internal Temperature Sensor Characteristic

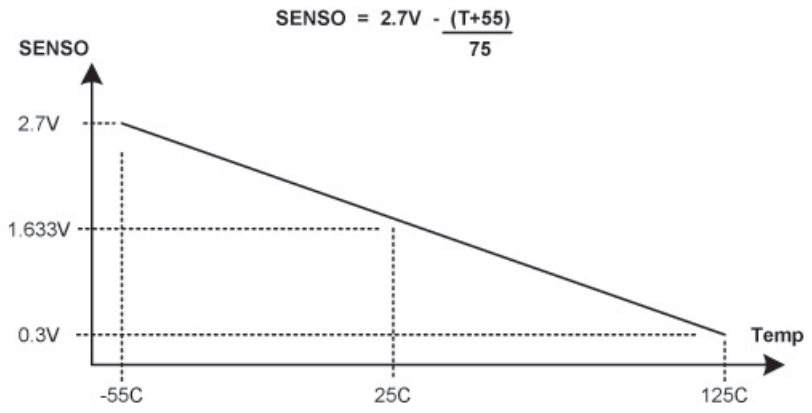

12.3 Initialization and Configuration

In order for the ADC module to be used, the PLL must be enabled and using a supported crystal frequency (see the **RCC** register). Using unsupported frequencies can cause faulty operation in the ADC module.

12.3.1 Module Initialization

Initialization of the ADC module is a simple process with very few steps. The main steps include enabling the clock to the ADC and reconfiguring the sample sequencer priorities (if needed).

The initialization sequence for the ADC is as follows:

1. Enable the ADC clock by writing a value of 0x0001.0000 to the **RCGC0** register (see page 110).
2. If required by the application, reconfigure the sample sequencer priorities in the **ADCSSPRI** register. The default configuration has Sample Sequencer 0 with the highest priority, and Sample Sequencer 3 as the lowest priority.

12.3.2 Sample Sequencer Configuration

Configuration of the sample sequencers is slightly more complex than the module initialization since each sample sequence is completely programmable.

The configuration for each sample sequencer should be as follows:

1. Ensure that the sample sequencer is disabled by writing a 0 to the corresponding ASENn bit in the **ADCACTSS** register. Programming of the sample sequencers is allowed without having them enabled. Disabling the sequencer during programming prevents erroneous execution if a trigger event were to occur during the configuration process.
2. Configure the trigger event for the sample sequencer in the **ADCEMUX** register.
3. For each sample in the sample sequence, configure the corresponding input source in the **ADCSSMUXn** register.
4. For each sample in the sample sequence, configure the sample control bits in the corresponding nibble in the **ADCSSCTLn** register. When programming the last nibble, ensure that the END bit is set. Failure to set the END bit causes unpredictable behavior.
5. If interrupts are to be used, write a 1 to the corresponding MASK bit in the **ADCIM** register.
6. Enable the sample sequencer logic by writing a 1 to the corresponding ASENn bit in the **ADCACTSS** register.

12.4 Register Map

Table 12-3 on page 289 lists the ADC registers. The offset listed is a hexadecimal increment to the register's address, relative to the ADC base address of 0x4003.8000.

Table 12-3. ADC Register Map

Offset	Name	Type	Reset	Description	See page
0x000	ADCACTSS	R/W	0x0000.0000	ADC Active Sample Sequencer	291
0x004	ADCRIS	RO	0x0000.0000	ADC Raw Interrupt Status	292
0x008	ADCIM	R/W	0x0000.0000	ADC Interrupt Mask	293
0x00C	ADCISC	R/W1C	0x0000.0000	ADC Interrupt Status and Clear	294
0x010	ADCOSTAT	R/W1C	0x0000.0000	ADC Overflow Status	296
0x014	ADCEMUX	R/W	0x0000.0000	ADC Event Multiplexer Select	297
0x018	ADCUSTAT	R/W1C	0x0000.0000	ADC Underflow Status	300
0x020	ADCSSPRI	R/W	0x0000.3210	ADC Sample Sequencer Priority	301
0x028	ADCPSSI	WO	-	ADC Processor Sample Sequence Initiate	303
0x030	ADCSAC	R/W	0x0000.0000	ADC Sample Averaging Control	304
0x040	ADCSSMUX0	R/W	0x0000.0000	ADC Sample Sequence Input Multiplexer Select 0	305
0x044	ADCSSCTL0	R/W	0x0000.0000	ADC Sample Sequence Control 0	307
0x048	ADCSSFIFO0	RO	0x0000.0000	ADC Sample Sequence Result FIFO 0	310

Offset	Name	Type	Reset	Description	See page
0x04C	ADCSSFSTAT0	RO	0x0000.0100	ADC Sample Sequence FIFO 0 Status	311
0x060	ADCSSMUX1	R/W	0x0000.0000	ADC Sample Sequence Input Multiplexer Select 1	312
0x064	ADCSSCTL1	R/W	0x0000.0000	ADC Sample Sequence Control 1	313
0x068	ADCSSFIFO1	RO	0x0000.0000	ADC Sample Sequence Result FIFO 1	310
0x06C	ADCSSFSTAT1	RO	0x0000.0100	ADC Sample Sequence FIFO 1 Status	311
0x080	ADCSSMUX2	R/W	0x0000.0000	ADC Sample Sequence Input Multiplexer Select 2	312
0x084	ADCSSCTL2	R/W	0x0000.0000	ADC Sample Sequence Control 2	313
0x088	ADCSSFIFO2	RO	0x0000.0000	ADC Sample Sequence Result FIFO 2	310
0x08C	ADCSSFSTAT2	RO	0x0000.0100	ADC Sample Sequence FIFO 2 Status	311
0x0A0	ADCSSMUX3	R/W	0x0000.0000	ADC Sample Sequence Input Multiplexer Select 3	315
0x0A4	ADCSSCTL3	R/W	0x0000.0002	ADC Sample Sequence Control 3	316
0x0A8	ADCSSFIFO3	RO	0x0000.0000	ADC Sample Sequence Result FIFO 3	310
0x0AC	ADCSSFSTAT3	RO	0x0000.0100	ADC Sample Sequence FIFO 3 Status	311
0x100	ADCTMLB	R/W	0x0000.0000	ADC Test Mode Loopback	317

12.5 Register Descriptions

The remainder of this section lists and describes the ADC registers, in numerical order by address offset.

Register 1: ADC Active Sample Sequencer (ADCACTSS), offset 0x000

This register controls the activation of the sample sequencers. Each sample sequencer can be enabled or disabled independently.

ADC Active Sample Sequencer (ADCACTSS)

Base 0x4003.8000
Offset 0x000
Type R/W, reset 0x0000.0000

	31	30	29	28	27	26	25	24	23	22	21	20	19	18	17	16
	reserved															
Type	RO	RO	RO	RO	RO	RO	RO	RO	RO	RO	RO	RO	RO	RO	RO	RO
Reset	0	0	0	0	0	0	0	0	0	0	0	0	0	0	0	0

	15	14	13	12	11	10	9	8	7	6	5	4	3	2	1	0
	reserved												ASEN3	ASEN2	ASEN1	ASEN0
Type	RO	RO	RO	RO	RO	RO	RO	RO	RO	RO	RO	RO	R/W	R/W	R/W	R/W
Reset	0	0	0	0	0	0	0	0	0	0	0	0	0	0	0	0

Bit/Field	Name	Type	Reset	Description
31:4	reserved	RO	0x0000.000	Software should not rely on the value of a reserved bit. To provide compatibility with future products, the value of a reserved bit should be preserved across a read-modify-write operation.
3	ASEN3	R/W	0	ADC SS3 Enable Specifies whether Sample Sequencer 3 is enabled. If set, the sample sequence logic for Sequencer 3 is active. Otherwise, the sequencer is inactive.
2	ASEN2	R/W	0	ADC SS2 Enable Specifies whether Sample Sequencer 2 is enabled. If set, the sample sequence logic for Sequencer 2 is active. Otherwise, the sequencer is inactive.
1	ASEN1	R/W	0	ADC SS1 Enable Specifies whether Sample Sequencer 1 is enabled. If set, the sample sequence logic for Sequencer 1 is active. Otherwise, the sequencer is inactive.
0	ASEN0	R/W	0	ADC SS0 Enable Specifies whether Sample Sequencer 0 is enabled. If set, the sample sequence logic for Sequencer 0 is active. Otherwise, the sequencer is inactive.

Register 2: ADC Raw Interrupt Status (ADCRIS), offset 0x004

This register shows the status of the raw interrupt signal of each sample sequencer. These bits may be polled by software to look for interrupt conditions without having to generate controller interrupts.

ADC Raw Interrupt Status (ADCRIS)

Base 0x4003.8000
Offset 0x004
Type RO, reset 0x0000.0000

	31	30	29	28	27	26	25	24	23	22	21	20	19	18	17	16
	reserved															
Type	RO	RO	RO	RO	RO	RO	RO	RO	RO	RO	RO	RO	RO	RO	RO	RO
Reset	0	0	0	0	0	0	0	0	0	0	0	0	0	0	0	0

	15	14	13	12	11	10	9	8	7	6	5	4	3	2	1	0
	reserved												INR3	INR2	INR1	INR0
Type	RO	RO	RO	RO	RO	RO	RO	RO	RO	RO	RO	RO	RO	RO	RO	RO
Reset	0	0	0	0	0	0	0	0	0	0	0	0	0	0	0	0

Bit/Field	Name	Type	Reset	Description
31:4	reserved	RO	0x000	Software should not rely on the value of a reserved bit. To provide compatibility with future products, the value of a reserved bit should be preserved across a read-modify-write operation.
3	INR3	RO	0	SS3 Raw Interrupt Status This bit is set by hardware when a sample with its respective **ADCSSCTL3** `IE` bit has completed conversion. This bit is cleared by setting the `IN3` bit in the **ADCISC** register.
2	INR2	RO	0	SS2 Raw Interrupt Status This bit is set by hardware when a sample with its respective **ADCSSCTL2** `IE` bit has completed conversion. This bit is cleared by setting the `IN2` bit in the **ADCISC** register.
1	INR1	RO	0	SS1 Raw Interrupt Status This bit is set by hardware when a sample with its respective **ADCSSCTL1** `IE` bit has completed conversion. This bit is cleared by setting the `IN1` bit in the **ADCISC** register.
0	INR0	RO	0	SS0 Raw Interrupt Status This bit is set by hardware when a sample with its respective **ADCSSCTL0** `IE` bit has completed conversion. This bit is cleared by setting the `IN30` bit in the **ADCISC** register.

Register 3: ADC Interrupt Mask (ADCIM), offset 0x008

This register controls whether the sample sequencer raw interrupt signals are promoted to controller interrupts. Each raw interrupt signal can be masked independently.

ADC Interrupt Mask (ADCIM)

Base 0x4003.8000
Offset 0x008
Type R/W, reset 0x0000.0000

	31	30	29	28	27	26	25	24	23	22	21	20	19	18	17	16
	reserved															
Type	RO	RO	RO	RO	RO	RO	RO	RO	RO	RO	RO	RO	RO	RO	RO	RO
Reset	0	0	0	0	0	0	0	0	0	0	0	0	0	0	0	0

	15	14	13	12	11	10	9	8	7	6	5	4	3	2	1	0
	reserved												MASK3	MASK2	MASK1	MASK0
Type	RO	RO	RO	RO	RO	RO	RO	RO	RO	RO	RO	RO	R/W	R/W	R/W	R/W
Reset	0	0	0	0	0	0	0	0	0	0	0	0	0	0	0	0

Bit/Field	Name	Type	Reset	Description
31:4	reserved	RO	0x000	Software should not rely on the value of a reserved bit. To provide compatibility with future products, the value of a reserved bit should be preserved across a read-modify-write operation.
3	MASK3	R/W	0	SS3 Interrupt Mask When set, this bit allows the raw interrupt signal from Sample Sequencer 3 (**ADCRIS** register `INR3` bit) to be promoted to a controller interrupt. When clear, the status of Sample Sequencer 3 does not affect the SS3 interrupt status.
2	MASK2	R/W	0	SS2 Interrupt Mask When set, this bit allows the raw interrupt signal from Sample Sequencer 2 (**ADCRIS** register `INR2` bit) to be promoted to a controller interrupt. When clear, the status of Sample Sequencer 2 does not affect the SS2 interrupt status.
1	MASK1	R/W	0	SS1 Interrupt Mask When set, this bit allows the raw interrupt signal from Sample Sequencer 1 (**ADCRIS** register `INR1` bit) to be promoted to a controller interrupt. When clear, the status of Sample Sequencer 1 does not affect the SS1 interrupt status.
0	MASK0	R/W	0	SS0 Interrupt Mask When set, this bit allows the raw interrupt signal from Sample Sequencer 0 (**ADCRIS** register `INR0` bit) to be promoted to a controller interrupt. When clear, the status of Sample Sequencer 0 does not affect the SS0 interrupt status.

Register 4: ADC Interrupt Status and Clear (ADCISC), offset 0x00C

This register provides the mechanism for clearing sample sequence interrupt conditions and shows the status of controller interrupts generated by the sample sequencers. When read, each bit field is the logical AND of the respective `INR` and `MASK` bits. Sample sequence nterrupts are cleared by setting the corresponding bit position. If software is polling the **ADCRIS** instead of generating interrupts, the sample sequence `INR` bits are still cleared via the **ADCISC** register, even if the `IN` bit is not set.

ADC Interrupt Status and Clear (ADCISC)

Base 0x4003.8000
Offset 0x00C
Type R/W1C, reset 0x0000.0000

	31	30	29	28	27	26	25	24	23	22	21	20	19	18	17	16
	reserved															
Type	RO	RO	RO	RO	RO	RO	RO	RO	RO	RO	RO	RO	RO	RO	RO	RO
Reset	0	0	0	0	0	0	0	0	0	0	0	0	0	0	0	0

	15	14	13	12	11	10	9	8	7	6	5	4	3	2	1	0
	reserved												IN3	IN2	IN1	IN0
Type	RO	RO	RO	RO	RO	RO	RO	RO	RO	RO	RO	RO	R/W1C	R/W1C	R/W1C	R/W1C
Reset	0	0	0	0	0	0	0	0	0	0	0	0	0	0	0	0

Bit/Field	Name	Type	Reset	Description
31:4	reserved	RO	0x000	Software should not rely on the value of a reserved bit. To provide compatibility with future products, the value of a reserved bit should be preserved across a read-modify-write operation.
3	IN3	R/W1C	0	SS3 Interrupt Status and Clear This bit is set when both the `INR3` bit in the **ADCRIS** register and the `MASK3` bit in the **ADCIM** register are set, providing a level-based interrupt to the controller. This bit is cleared by writing a 1. Clearing this bit also clears the `INR3` bit.
2	IN2	R/W1C	0	SS2 Interrupt Status and Clear This bit is set when both the `INR2` bit in the **ADCRIS** register and the `MASK2` bit in the **ADCIM** register are set, providing a level-based interrupt to the controller. This bit is cleared by writing a 1. Clearing this bit also clears the `INR2` bit.
1	IN1	R/W1C	0	SS1 Interrupt Status and Clear This bit is set when both the `INR1` bit in the **ADCRIS** register and the `MASK1` bit in the **ADCIM** register are set, providing a level-based interrupt to the controller. This bit is cleared by writing a 1. Clearing this bit also clears the `INR1` bit.

Bit/Field	Name	Type	Reset	Description
0	IN0	R/W1C	0	SS0 Interrupt Status and Clear This bit is set when both the `INR0` bit in the **ADCRIS** register and the `MASK0` bit in the **ADCIM** register are set, providing a level-based interrupt to the controller. This bit is cleared by writing a 1. Clearing this bit also clears the `INR0` bit.

Register 5: ADC Overflow Status (ADCOSTAT), offset 0x010

This register indicates overflow conditions in the sample sequencer FIFOs. Once the overflow condition has been handled by software, the condition can be cleared by writing a 1 to the corresponding bit position.

ADC Overflow Status (ADCOSTAT)

Base 0x4003.8000
Offset 0x010
Type R/W1C, reset 0x0000.0000

	31	30	29	28	27	26	25	24	23	22	21	20	19	18	17	16
	reserved															
Type	RO	RO	RO	RO	RO	RO	RO	RO	RO	RO	RO	RO	RO	RO	RO	RO
Reset	0	0	0	0	0	0	0	0	0	0	0	0	0	0	0	0

	15	14	13	12	11	10	9	8	7	6	5	4	3	2	1	0
	reserved												OV3	OV2	OV1	OV0
Type	RO	RO	RO	RO	RO	RO	RO	RO	RO	RO	RO	RO	R/W1C	R/W1C	R/W1C	R/W1C
Reset	0	0	0	0	0	0	0	0	0	0	0	0	0	0	0	0

Bit/Field	Name	Type	Reset	Description
31:4	reserved	RO	0x0000.000	Software should not rely on the value of a reserved bit. To provide compatibility with future products, the value of a reserved bit should be preserved across a read-modify-write operation.
3	OV3	R/W1C	0	SS3 FIFO Overflow When set, this bit specifies that the FIFO for Sample Sequencer 3 has hit an overflow condition where the FIFO is full and a write was requested. When an overflow is detected, the most recent write is dropped. This bit is cleared by writing a 1.
2	OV2	R/W1C	0	SS2 FIFO Overflow When set, this bit specifies that the FIFO for Sample Sequencer 2 has hit an overflow condition where the FIFO is full and a write was requested. When an overflow is detected, the most recent write is dropped. This bit is cleared by writing a 1.
1	OV1	R/W1C	0	SS1 FIFO Overflow When set, this bit specifies that the FIFO for Sample Sequencer 1 has hit an overflow condition where the FIFO is full and a write was requested. When an overflow is detected, the most recent write is dropped. This bit is cleared by writing a 1.
0	OV0	R/W1C	0	SS0 FIFO Overflow When set, this bit specifies that the FIFO for Sample Sequencer 0 has hit an overflow condition where the FIFO is full and a write was requested. When an overflow is detected, the most recent write is dropped. This bit is cleared by writing a 1.

Register 6: ADC Event Multiplexer Select (ADCEMUX), offset 0x014

The **ADCEMUX** selects the event (trigger) that initiates sampling for each sample sequencer. Each sample sequencer can be configured with a unique trigger source.

ADC Event Multiplexer Select (ADCEMUX)

Base 0x4003.8000
Offset 0x014
Type R/W, reset 0x0000.0000

	31	30	29	28	27	26	25	24	23	22	21	20	19	18	17	16
	reserved															
Type	RO	RO	RO	RO	RO	RO	RO	RO	RO	RO	RO	RO	RO	RO	RO	RO
Reset	0	0	0	0	0	0	0	0	0	0	0	0	0	0	0	0

	15	14	13	12	11	10	9	8	7	6	5	4	3	2	1	0
	EM3				EM2				EM1				EM0			
Type	R/W	R/W	R/W	R/W	R/W	R/W	R/W	R/W	R/W	R/W	R/W	R/W	R/W	R/W	R/W	R/W
Reset	0	0	0	0	0	0	0	0	0	0	0	0	0	0	0	0

Bit/Field	Name	Type	Reset	Description
31:16	reserved	RO	0x0	Software should not rely on the value of a reserved bit. To provide compatibility with future products, the value of a reserved bit should be preserved across a read-modify-write operation.
15:12	EM3	R/W	0x0	SS3 Trigger Select This field selects the trigger source for Sample Sequencer 3. The valid configurations for this field are:

Value	Event
0x0	Controller (default)
0x1	Analog Comparator 0
0x2	Reserved
0x3	Reserved
0x4	External (GPIO PB4)
0x5	Timer In addition, the trigger must be enabled with the `TnOTE` bit in the **GPTMCTL** register (see page 239).
0x6	PWM0
0x7	PWM1
0x8	PWM2
0x9-0xE	reserved
0xF	Always (continuously sample)

Bit/Field	Name	Type	Reset	Description
11:8	EM2	R/W	0x0	SS2 Trigger Select This field selects the trigger source for Sample Sequencer 2. The valid configurations for this field are: Value — Event 0x0 — Controller (default) 0x1 — Analog Comparator 0 0x2 — Reserved 0x3 — Reserved 0x4 — External (GPIO PB4) 0x5 — Timer In addition, the trigger must be enabled with the `TnOTE` bit in the **GPTMCTL** register (see page 239). 0x6 — PWM0 0x7 — PWM1 0x8 — PWM2 0x9-0xE — reserved 0xF — Always (continuously sample)
7:4	EM1	R/W	0x0	SS1 Trigger Select This field selects the trigger source for Sample Sequencer 1. The valid configurations for this field are: Value — Event 0x0 — Controller (default) 0x1 — Analog Comparator 0 0x2 — Reserved 0x3 — Reserved 0x4 — External (GPIO PB4) 0x5 — Timer In addition, the trigger must be enabled with the `TnOTE` bit in the **GPTMCTL** register (see page 239). 0x6 — PWM0 0x7 — PWM1 0x8 — PWM2 0x9-0xE — reserved 0xF — Always (continuously sample)

Bit/Field	Name	Type	Reset	Description
3:0	EM0	R/W	0x0	SS0 Trigger Select This field selects the trigger source for Sample Sequencer 0. The valid configurations for this field are:

Value	Event
0x0	Controller (default)
0x1	Analog Comparator 0
0x2	Reserved
0x3	Reserved
0x4	External (GPIO PB4)
0x5	Timer In addition, the trigger must be enabled with the TnOTE bit in the **GPTMCTL** register (see page 239).
0x6	PWM0
0x7	PWM1
0x8	PWM2
0x9-0xE	reserved
0xF	Always (continuously sample)

Register 7: ADC Underflow Status (ADCUSTAT), offset 0x018

This register indicates underflow conditions in the sample sequencer FIFOs. The corresponding underflow condition is cleared by writing a 1 to the relevant bit position.

ADC Underflow Status (ADCUSTAT)

Base 0x4003.8000
Offset 0x018
Type R/W1C, reset 0x0000.0000

	31	30	29	28	27	26	25	24	23	22	21	20	19	18	17	16
	reserved															
Type	RO	RO	RO	RO	RO	RO	RO	RO	RO	RO	RO	RO	RO	RO	RO	RO
Reset	0	0	0	0	0	0	0	0	0	0	0	0	0	0	0	0

	15	14	13	12	11	10	9	8	7	6	5	4	3	2	1	0
	reserved												UV3	UV2	UV1	UV0
Type	RO	RO	RO	RO	RO	RO	RO	RO	RO	RO	RO	RO	R/W1C	R/W1C	R/W1C	R/W1C
Reset	0	0	0	0	0	0	0	0	0	0	0	0	0	0	0	0

Bit/Field	Name	Type	Reset	Description
31:4	reserved	RO	0x0000.000	Software should not rely on the value of a reserved bit. To provide compatibility with future products, the value of a reserved bit should be preserved across a read-modify-write operation.
3	UV3	R/W1C	0	SS3 FIFO Underflow When set, this bit specifies that the FIFO for Sample Sequencer 3 has hit an underflow condition where the FIFO is empty and a read was requested. The problematic read does not move the FIFO pointers, and 0s are returned. This bit is cleared by writing a 1.
2	UV2	R/W1C	0	SS2 FIFO Underflow When set, this bit specifies that the FIFO for Sample Sequencer 2 has hit an underflow condition where the FIFO is empty and a read was requested. The problematic read does not move the FIFO pointers, and 0s are returned. This bit is cleared by writing a 1.
1	UV1	R/W1C	0	SS1 FIFO Underflow When set, this bit specifies that the FIFO for Sample Sequencer 1 has hit an underflow condition where the FIFO is empty and a read was requested. The problematic read does not move the FIFO pointers, and 0s are returned. This bit is cleared by writing a 1.
0	UV0	R/W1C	0	SS0 FIFO Underflow When set, this bit specifies that the FIFO for Sample Sequencer 0 has hit an underflow condition where the FIFO is empty and a read was requested. The problematic read does not move the FIFO pointers, and 0s are returned. This bit is cleared by writing a 1.

Register 8: ADC Sample Sequencer Priority (ADCSSPRI), offset 0x020

This register sets the priority for each of the sample sequencers. Out of reset, Sequencer 0 has the highest priority, and Sequencer 3 has the lowest priority. When reconfiguring sequence priorities, each sequence must have a unique priority for the ADC to operate properly.

ADC Sample Sequencer Priority (ADCSSPRI)

Base 0x4003.8000
Offset 0x020
Type R/W, reset 0x0000.3210

	31	30	29	28	27	26	25	24	23	22	21	20	19	18	17	16
	reserved															
Type	RO	RO	RO	RO	RO	RO	RO	RO	RO	RO	RO	RO	RO	RO	RO	RO
Reset	0	0	0	0	0	0	0	0	0	0	0	0	0	0	0	0

	15	14	13	12	11	10	9	8	7	6	5	4	3	2	1	0
	reserved		SS3		reserved		SS2		reserved		SS1		reserved		SS0	
Type	RO	RO	R/W	R/W	RO	RO	R/W	R/W	RO	RO	R/W	R/W	RO	RO	R/W	R/W
Reset	0	0	1	1	0	0	1	0	0	0	0	1	0	0	0	0

Bit/Field	Name	Type	Reset	Description
31:14	reserved	RO	0x0000.0	Software should not rely on the value of a reserved bit. To provide compatibility with future products, the value of a reserved bit should be preserved across a read-modify-write operation.
13:12	SS3	R/W	0x3	SS3 Priority This field contains a binary-encoded value that specifies the priority encoding of Sample Sequencer 3. A priority encoding of 0 is highest and 3 is lowest. The priorities assigned to the sequencers must be uniquely mapped. The ADC may not operate properly if two or more fields are equal.
11:10	reserved	RO	0x0	Software should not rely on the value of a reserved bit. To provide compatibility with future products, the value of a reserved bit should be preserved across a read-modify-write operation.
9:8	SS2	R/W	0x2	SS2 Priority This field contains a binary-encoded value that specifies the priority encoding of Sample Sequencer 2. A priority encoding of 0 is highest and 3 is lowest. The priorities assigned to the sequencers must be uniquely mapped. The ADC may not operate properly if two or more fields are equal.
7:6	reserved	RO	0x0	Software should not rely on the value of a reserved bit. To provide compatibility with future products, the value of a reserved bit should be preserved across a read-modify-write operation.
5:4	SS1	R/W	0x1	SS1 Priority This field contains a binary-encoded value that specifies the priority encoding of Sample Sequencer 1. A priority encoding of 0 is highest and 3 is lowest. The priorities assigned to the sequencers must be uniquely mapped. The ADC may not operate properly if two or more fields are equal.
3:2	reserved	RO	0x0	Software should not rely on the value of a reserved bit. To provide compatibility with future products, the value of a reserved bit should be preserved across a read-modify-write operation.

Bit/Field	Name	Type	Reset	Description
1:0	SS0	R/W	0x0	SS0 Priority This field contains a binary-encoded value that specifies the priority encoding of Sample Sequencer 0. A priority encoding of 0 is highest and 3 is lowest. The priorities assigned to the sequencers must be uniquely mapped. The ADC may not operate properly if two or more fields are equal.

Register 9: ADC Processor Sample Sequence Initiate (ADCPSSI), offset 0x028

This register provides a mechanism for application software to initiate sampling in the sample sequencers. Sample sequences can be initiated individually or in any combination. When multiple sequences are triggered simultaneously, the priority encodings in **ADCSSPRI** dictate execution order.

ADC Processor Sample Sequence Initiate (ADCPSSI)

Base 0x4003.8000
Offset 0x028
Type WO, reset -

	31	30	29	28	27	26	25	24	23	22	21	20	19	18	17	16
	reserved															
Type	RO	RO	RO	RO	RO	RO	RO	RO	RO	RO	RO	RO	RO	RO	RO	RO
Reset	0	0	0	0	0	0	0	0	0	0	0	0	0	0	0	0

	15	14	13	12	11	10	9	8	7	6	5	4	3	2	1	0
	reserved												SS3	SS2	SS1	SS0
Type	RO	RO	RO	RO	RO	RO	RO	RO	RO	RO	RO	RO	WO	WO	WO	WO
Reset	0	0	0	0	0	0	0	0	0	0	0	0	-	-	-	-

Bit/Field	Name	Type	Reset	Description
31:4	reserved	RO	0	Software should not rely on the value of a reserved bit. To provide compatibility with future products, the value of a reserved bit should be preserved across a read-modify-write operation.
3	SS3	WO	-	SS3 Initiate When set, this bit triggers sampling on Sample Sequencer 3 if the sequencer is enabled in the **ADCACTSS** register. Only a write by software is valid; a read of this register returns no meaningful data.
2	SS2	WO	-	SS2 Initiate When set, this bit triggers sampling on Sample Sequencer 2 if the sequencer is enabled in the **ADCACTSS** register. Only a write by software is valid; a read of this register returns no meaningful data.
1	SS1	WO	-	SS1 Initiate When set, this bit triggers sampling on Sample Sequencer 1 if the sequencer is enabled in the **ADCACTSS** register. Only a write by software is valid; a read of this register returns no meaningful data.
0	SS0	WO	-	SS0 Initiate When set, this bit triggers sampling on Sample Sequencer 0 if the sequencer is enabled in the **ADCACTSS** register. Only a write by software is valid; a read of this register returns no meaningful data.

Register 10: ADC Sample Averaging Control (ADCSAC), offset 0x030

This register controls the amount of hardware averaging applied to conversion results. The final conversion result stored in the FIFO is averaged from 2^{AVG} consecutive ADC samples at the specified ADC speed. If AVG is 0, the sample is passed directly through without any averaging. If AVG=6, then 64 consecutive ADC samples are averaged to generate one result in the sequencer FIFO. An AVG = 7 provides unpredictable results.

ADC Sample Averaging Control (ADCSAC)

Base 0x4003.8000
Offset 0x030
Type R/W, reset 0x0000.0000

	31	30	29	28	27	26	25	24	23	22	21	20	19	18	17	16
	reserved															
Type	RO	RO	RO	RO	RO	RO	RO	RO	RO	RO	RO	RO	RO	RO	RO	RO
Reset	0	0	0	0	0	0	0	0	0	0	0	0	0	0	0	0

	15	14	13	12	11	10	9	8	7	6	5	4	3	2	1	0
	reserved													AVG		
Type	RO	RO	RO	RO	RO	RO	RO	RO	RO	RO	RO	RO	RO	R/W	R/W	R/W
Reset	0	0	0	0	0	0	0	0	0	0	0	0	0	0	0	0

Bit/Field	Name	Type	Reset	Description
31:3	reserved	RO	0x0000.000	Software should not rely on the value of a reserved bit. To provide compatibility with future products, the value of a reserved bit should be preserved across a read-modify-write operation.
2:0	AVG	R/W	0x0	Hardware Averaging Control Specifies the amount of hardware averaging that will be applied to ADC samples. The AVG field can be any value between 0 and 6. Entering a value of 7 creates unpredictable results. Value Description 0x0 No hardware oversampling 0x1 2x hardware oversampling 0x2 4x hardware oversampling 0x3 8x hardware oversampling 0x4 16x hardware oversampling 0x5 32x hardware oversampling 0x6 64x hardware oversampling 0x7 Reserved

Register 11: ADC Sample Sequence Input Multiplexer Select 0 (ADCSSMUX0), offset 0x040

This register defines the analog input configuration for each sample in a sequence executed with Sample Sequencer 0. This register is 32 bits wide and contains information for eight possible samples.

ADC Sample Sequence Input Multiplexer Select 0 (ADCSSMUX0)

Base 0x4003.8000
Offset 0x040
Type R/W, reset 0x0000.0000

	31	30	29	28	27	26	25	24	23	22	21	20	19	18	17	16
	reserved		MUX7		reserved		MUX6		reserved		MUX5		reserved		MUX4	
Type	RO	RO	R/W	R/W	RO	RO	R/W	R/W	RO	RO	R/W	R/W	RO	RO	R/W	R/W
Reset	0	0	0	0	0	0	0	0	0	0	0	0	0	0	0	0

	15	14	13	12	11	10	9	8	7	6	5	4	3	2	1	0
	reserved		MUX3		reserved		MUX2		reserved		MUX1		reserved		MUX0	
Type	RO	RO	R/W	R/W	RO	RO	R/W	R/W	RO	RO	R/W	R/W	RO	RO	R/W	R/W
Reset	0	0	0	0	0	0	0	0	0	0	0	0	0	0	0	0

Bit/Field	Name	Type	Reset	Description
31:30	reserved	RO	0	Software should not rely on the value of a reserved bit. To provide compatibility with future products, the value of a reserved bit should be preserved across a read-modify-write operation.
29:28	MUX7	R/W	0x0	8th Sample Input Select The `MUX7` field is used during the eighth sample of a sequence executed with the sample sequencer. It specifies which of the analog inputs is sampled for the analog-to-digital conversion. The value set here indicates the corresponding pin, for example, a value of 1 indicates the input is `ADC1`.
27:26	reserved	RO	0	Software should not rely on the value of a reserved bit. To provide compatibility with future products, the value of a reserved bit should be preserved across a read-modify-write operation.
25:24	MUX6	R/W	0x0	7th Sample Input Select The `MUX6` field is used during the seventh sample of a sequence executed with the sample sequencer. It specifies which of the analog inputs is sampled for the analog-to-digital conversion.
23:22	reserved	RO	0	Software should not rely on the value of a reserved bit. To provide compatibility with future products, the value of a reserved bit should be preserved across a read-modify-write operation.
21:20	MUX5	R/W	0x0	6th Sample Input Select The `MUX5` field is used during the sixth sample of a sequence executed with the sample sequencer. It specifies which of the analog inputs is sampled for the analog-to-digital conversion.
19:18	reserved	RO	0	Software should not rely on the value of a reserved bit. To provide compatibility with future products, the value of a reserved bit should be preserved across a read-modify-write operation.

Bit/Field	Name	Type	Reset	Description
17:16	MUX4	R/W	0x0	5th Sample Input Select The `MUX4` field is used during the fifth sample of a sequence executed with the sample sequencer. It specifies which of the analog inputs is sampled for the analog-to-digital conversion.
15:14	reserved	RO	0	Software should not rely on the value of a reserved bit. To provide compatibility with future products, the value of a reserved bit should be preserved across a read-modify-write operation.
13:12	MUX3	R/W	0x0	4th Sample Input Select The `MUX3` field is used during the fourth sample of a sequence executed with the sample sequencer. It specifies which of the analog inputs is sampled for the analog-to-digital conversion.
11:10	reserved	RO	0	Software should not rely on the value of a reserved bit. To provide compatibility with future products, the value of a reserved bit should be preserved across a read-modify-write operation.
9:8	MUX2	R/W	0x0	3rd Sample Input Select The `MUX72` field is used during the third sample of a sequence executed with the sample sequencer. It specifies which of the analog inputs is sampled for the analog-to-digital conversion.
7:6	reserved	RO	0	Software should not rely on the value of a reserved bit. To provide compatibility with future products, the value of a reserved bit should be preserved across a read-modify-write operation.
5:4	MUX1	R/W	0x0	2nd Sample Input Select The `MUX1` field is used during the second sample of a sequence executed with the sample sequencer. It specifies which of the analog inputs is sampled for the analog-to-digital conversion.
3:2	reserved	RO	0	Software should not rely on the value of a reserved bit. To provide compatibility with future products, the value of a reserved bit should be preserved across a read-modify-write operation.
1:0	MUX0	R/W	0x0	1st Sample Input Select The `MUX0` field is used during the first sample of a sequence executed with the sample sequencer. It specifies which of the analog inputs is sampled for the analog-to-digital conversion.

Register 12: ADC Sample Sequence Control 0 (ADCSSCTL0), offset 0x044

This register contains the configuration information for each sample for a sequence executed with a sample sequencer. When configuring a sample sequence, the END bit must be set at some point, whether it be after the first sample, last sample, or any sample in between. This register is 32-bits wide and contains information for eight possible samples.

ADC Sample Sequence Control 0 (ADCSSCTL0)

Base 0x4003.8000
Offset 0x044
Type R/W, reset 0x0000.0000

	31	30	29	28	27	26	25	24	23	22	21	20	19	18	17	16
	TS7	IE7	END7	D7	TS6	IE6	END6	D6	TS5	IE5	END5	D5	TS4	IE4	END4	D4
Type	R/W	R/W	R/W	R/W	R/W	R/W	R/W	R/W	R/W	R/W	R/W	R/W	R/W	R/W	R/W	R/W
Reset	0	0	0	0	0	0	0	0	0	0	0	0	0	0	0	0

	15	14	13	12	11	10	9	8	7	6	5	4	3	2	1	0
	TS3	IE3	END3	D3	TS2	IE2	END2	D2	TS1	IE1	END1	D1	TS0	IE0	END0	D0
Type	R/W	R/W	R/W	R/W	R/W	R/W	R/W	R/W	R/W	R/W	R/W	R/W	R/W	R/W	R/W	R/W
Reset	0	0	0	0	0	0	0	0	0	0	0	0	0	0	0	0

Bit/Field	Name	Type	Reset	Description
31	TS7	R/W	0	8th Sample Temp Sensor Select This bit is used during the eighth sample of the sample sequence and and specifies the input source of the sample. When set, the temperature sensor is read. When clear, the input pin specified by the **ADCSSMUX** register is read.
30	IE7	R/W	0	8th Sample Interrupt Enable This bit is used during the eighth sample of the sample sequence and specifies whether the raw interrupt signal (INR0 bit) is asserted at the end of the sample's conversion. If the MASK0 bit in the **ADCIM** register is set, the interrupt is promoted to a controller-level interrupt. When this bit is set, the raw interrupt is asserted. When this bit is clear, the raw interrupt is not asserted. It is legal to have multiple samples within a sequence generate interrupts.
29	END7	R/W	0	8th Sample is End of Sequence The END7 bit indicates that this is the last sample of the sequence. It is possible to end the sequence on any sample position. Samples defined after the sample containing a set END are not requested for conversion even though the fields may be non-zero. It is required that software write the END bit somewhere within the sequence. (Sample Sequencer 3, which only has a single sample in the sequence, is hardwired to have the END0 bit set.) Setting this bit indicates that this sample is the last in the sequence.
28	D7	R/W	0	8th Sample Diff Input Select The D7 bit indicates that the analog input is to be differentially sampled. The corresponding **ADCSSMUXx** nibble must be set to the pair number "i", where the paired inputs are "2i and 2i+1". The temperature sensor does not have a differential option. When set, the analog inputs are differentially sampled.

Bit/Field	Name	Type	Reset	Description
27	TS6	R/W	0	7th Sample Temp Sensor Select Same definition as `TS7` but used during the seventh sample.
26	IE6	R/W	0	7th Sample Interrupt Enable Same definition as `IE7` but used during the seventh sample.
25	END6	R/W	0	7th Sample is End of Sequence Same definition as `END7` but used during the seventh sample.
24	D6	R/W	0	7th Sample Diff Input Select Same definition as `D7` but used during the seventh sample.
23	TS5	R/W	0	6th Sample Temp Sensor Select Same definition as `TS7` but used during the sixth sample.
22	IE5	R/W	0	6th Sample Interrupt Enable Same definition as `IE7` but used during the sixth sample.
21	END5	R/W	0	6th Sample is End of Sequence Same definition as `END7` but used during the sixth sample.
20	D5	R/W	0	6th Sample Diff Input Select Same definition as `D7` but used during the sixth sample.
19	TS4	R/W	0	5th Sample Temp Sensor Select Same definition as `TS7` but used during the fifth sample.
18	IE4	R/W	0	5th Sample Interrupt Enable Same definition as `IE7` but used during the fifth sample.
17	END4	R/W	0	5th Sample is End of Sequence Same definition as `END7` but used during the fifth sample.
16	D4	R/W	0	5th Sample Diff Input Select Same definition as `D7` but used during the fifth sample.
15	TS3	R/W	0	4th Sample Temp Sensor Select Same definition as `TS7` but used during the fourth sample.
14	IE3	R/W	0	4th Sample Interrupt Enable Same definition as `IE7` but used during the fourth sample.
13	END3	R/W	0	4th Sample is End of Sequence Same definition as `END7` but used during the fourth sample.
12	D3	R/W	0	4th Sample Diff Input Select Same definition as `D7` but used during the fourth sample.

Bit/Field	Name	Type	Reset	Description
11	TS2	R/W	0	3rd Sample Temp Sensor Select Same definition as `TS7` but used during the third sample.
10	IE2	R/W	0	3rd Sample Interrupt Enable Same definition as `IE7` but used during the third sample.
9	END2	R/W	0	3rd Sample is End of Sequence Same definition as `END7` but used during the third sample.
8	D2	R/W	0	3rd Sample Diff Input Select Same definition as `D7` but used during the third sample.
7	TS1	R/W	0	2nd Sample Temp Sensor Select Same definition as `TS7` but used during the second sample.
6	IE1	R/W	0	2nd Sample Interrupt Enable Same definition as `IE7` but used during the second sample.
5	END1	R/W	0	2nd Sample is End of Sequence Same definition as `END7` but used during the second sample.
4	D1	R/W	0	2nd Sample Diff Input Select Same definition as `D7` but used during the second sample.
3	TS0	R/W	0	1st Sample Temp Sensor Select Same definition as `TS7` but used during the first sample.
2	IE0	R/W	0	1st Sample Interrupt Enable Same definition as `IE7` but used during the first sample.
1	END0	R/W	0	1st Sample is End of Sequence Same definition as `END7` but used during the first sample. Since this sequencer has only one entry, this bit must be set.
0	D0	R/W	0	1st Sample Diff Input Select Same definition as `D7` but used during the first sample.

Register 13: ADC Sample Sequence Result FIFO 0 (ADCSSFIFO0), offset 0x048

Register 14: ADC Sample Sequence Result FIFO 1 (ADCSSFIFO1), offset 0x068

Register 15: ADC Sample Sequence Result FIFO 2 (ADCSSFIFO2), offset 0x088

Register 16: ADC Sample Sequence Result FIFO 3 (ADCSSFIFO3), offset 0x0A8

This register contains the conversion results for samples collected with the sample sequencer (the **ADCSSFIFO0** register is used for Sample Sequencer 0, **ADCSSFIFO1** for Sequencer 1, **ADCSSFIFO2** for Sequencer 2, and **ADCSSFIFO3** for Sequencer 3). Reads of this register return conversion result data in the order sample 0, sample 1, and so on, until the FIFO is empty. If the FIFO is not properly handled by software, overflow and underflow conditions are registered in the **ADCOSTAT** and **ADCUSTAT** registers.

ADC Sample Sequence Result FIFO 0 (ADCSSFIFO0)

Base 0x4003.8000
Offset 0x048
Type RO, reset 0x0000.0000

	31	30	29	28	27	26	25	24	23	22	21	20	19	18	17	16
	reserved															
Type	RO	RO	RO	RO	RO	RO	RO	RO	RO	RO	RO	RO	RO	RO	RO	RO
Reset	0	0	0	0	0	0	0	0	0	0	0	0	0	0	0	0

	15	14	13	12	11	10	9	8	7	6	5	4	3	2	1	0
	reserved						DATA									
Type	RO	RO	RO	RO	RO	RO	RO	RO	RO	RO	RO	RO	RO	RO	RO	RO
Reset	0	0	0	0	0	0	0	0	0	0	0	0	0	0	0	0

Bit/Field	Name	Type	Reset	Description
31:10	reserved	RO	0x0000.0	Software should not rely on the value of a reserved bit. To provide compatibility with future products, the value of a reserved bit should be preserved across a read-modify-write operation.
9:0	DATA	RO	0x000	Conversion Result Data

Register 17: ADC Sample Sequence FIFO 0 Status (ADCSSFSTAT0), offset 0x04C

Register 18: ADC Sample Sequence FIFO 1 Status (ADCSSFSTAT1), offset 0x06C

Register 19: ADC Sample Sequence FIFO 2 Status (ADCSSFSTAT2), offset 0x08C

Register 20: ADC Sample Sequence FIFO 3 Status (ADCSSFSTAT3), offset 0x0AC

This register provides a window into the sample sequencer, providing full/empty status information as well as the positions of the head and tail pointers. The reset value of 0x100 indicates an empty FIFO. The **ADCSSFSTAT0** register provides status on FIFO0, **ADCSSFSTAT1** on FIFO1, **ADCSSFSTAT2** on FIFO2, and **ADCSSFSTAT3** on FIFO3.

ADC Sample Sequence FIFO 0 Status (ADCSSFSTAT0)

Base 0x4003.8000
Offset 0x04C
Type RO, reset 0x0000.0100

	31	30	29	28	27	26	25	24	23	22	21	20	19	18	17	16
	reserved															
Type	RO	RO	RO	RO	RO	RO	RO	RO	RO	RO	RO	RO	RO	RO	RO	RO
Reset	0	0	0	0	0	0	0	0	0	0	0	0	0	0	0	0

	15	14	13	12	11	10	9	8	7	6	5	4	3	2	1	0
	reserved			FULL	reserved			EMPTY	HPTR				TPTR			
Type	RO	RO	RO	RO	RO	RO	RO	RO	RO	RO	RO	RO	RO	RO	RO	RO
Reset	0	0	0	0	0	0	0	1	0	0	0	0	0	0	0	0

Bit/Field	Name	Type	Reset	Description
31:13	reserved	RO	0x0	Software should not rely on the value of a reserved bit. To provide compatibility with future products, the value of a reserved bit should be preserved across a read-modify-write operation.
12	FULL	RO	0	FIFO Full When set, this bit indicates that the FIFO is currently full.
11:9	reserved	RO	0x0	Software should not rely on the value of a reserved bit. To provide compatibility with future products, the value of a reserved bit should be preserved across a read-modify-write operation.
8	EMPTY	RO	1	FIFO Empty When set, this bit indicates that the FIFO is currently empty.
7:4	HPTR	RO	0x0	FIFO Head Pointer This field contains the current "head" pointer index for the FIFO, that is, the next entry to be written.
3:0	TPTR	RO	0x0	FIFO Tail Pointer This field contains the current "tail" pointer index for the FIFO, that is, the next entry to be read.

Register 21: ADC Sample Sequence Input Multiplexer Select 1 (ADCSSMUX1), offset 0x060

Register 22: ADC Sample Sequence Input Multiplexer Select 2 (ADCSSMUX2), offset 0x080

This register defines the analog input configuration for each sample in a sequence executed with Sample Sequencer 1 or 2. These registers are 16-bits wide and contain information for four possible samples. See the **ADCSSMUX0** register on page 305 for detailed bit descriptions. The **ADCSSMUX1** register affects Sample Sequencer 1 and the **ADCSSMUX2** register affects Sample Sequencer 2.

ADC Sample Sequence Input Multiplexer Select 1 (ADCSSMUX1)

Base 0x4003.8000
Offset 0x060
Type R/W, reset 0x0000.0000

	31	30	29	28	27	26	25	24	23	22	21	20	19	18	17	16
	reserved															
Type	RO	RO	RO	RO	RO	RO	RO	RO	RO	RO	RO	RO	RO	RO	RO	RO
Reset	0	0	0	0	0	0	0	0	0	0	0	0	0	0	0	0

	15	14	13	12	11	10	9	8	7	6	5	4	3	2	1	0
	reserved		MUX3		reserved		MUX2		reserved		MUX1		reserved		MUX0	
Type	RO	RO	R/W	R/W	RO	RO	R/W	R/W	RO	RO	R/W	R/W	RO	RO	R/W	R/W
Reset	0	0	0	0	0	0	0	0	0	0	0	0	0	0	0	0

Bit/Field	Name	Type	Reset	Description
31:14	reserved	RO	0x0000	Software should not rely on the value of a reserved bit. To provide compatibility with future products, the value of a reserved bit should be preserved across a read-modify-write operation.
13:12	MUX3	R/W	0x0	4th Sample Input Select
11:10	reserved	RO	0	Software should not rely on the value of a reserved bit. To provide compatibility with future products, the value of a reserved bit should be preserved across a read-modify-write operation.
9:8	MUX2	R/W	0x0	3rd Sample Input Select
7:6	reserved	RO	0	Software should not rely on the value of a reserved bit. To provide compatibility with future products, the value of a reserved bit should be preserved across a read-modify-write operation.
5:4	MUX1	R/W	0x0	2nd Sample Input Select
3:2	reserved	RO	0	Software should not rely on the value of a reserved bit. To provide compatibility with future products, the value of a reserved bit should be preserved across a read-modify-write operation.
1:0	MUX0	R/W	0x0	1st Sample Input Select

Register 23: ADC Sample Sequence Control 1 (ADCSSCTL1), offset 0x064

Register 24: ADC Sample Sequence Control 2 (ADCSSCTL2), offset 0x084

These registers contain the configuration information for each sample for a sequence executed with Sample Sequencer 1 or 2. When configuring a sample sequence, the `END` bit must be set at some point, whether it be after the first sample, last sample, or any sample in between. These registers are 16-bits wide and contain information for four possible samples. See the **ADCSSCTL0** register on page 307 for detailed bit descriptions. The **ADCSSCTL1** register configures Sample Sequencer 1 and the **ADCSSCTL2** register configures Sample Sequencer 2.

ADC Sample Sequence Control 1 (ADCSSCTL1)

Base 0x4003.8000
Offset 0x064
Type R/W, reset 0x0000.0000

	31	30	29	28	27	26	25	24	23	22	21	20	19	18	17	16
	reserved															
Type	RO	RO	RO	RO	RO	RO	RO	RO	RO	RO	RO	RO	RO	RO	RO	RO
Reset	0	0	0	0	0	0	0	0	0	0	0	0	0	0	0	0

	15	14	13	12	11	10	9	8	7	6	5	4	3	2	1	0
	TS3	IE3	END3	D3	TS2	IE2	END2	D2	TS1	IE1	END1	D1	TS0	IE0	END0	D0
Type	R/W	R/W	R/W	R/W	R/W	R/W	R/W	R/W	R/W	R/W	R/W	R/W	R/W	R/W	R/W	R/W
Reset	0	0	0	0	0	0	0	0	0	0	0	0	0	0	0	0

Bit/Field	Name	Type	Reset	Description
31:16	reserved	RO	0x0000	Software should not rely on the value of a reserved bit. To provide compatibility with future products, the value of a reserved bit should be preserved across a read-modify-write operation.
15	TS3	R/W	0	4th Sample Temp Sensor Select Same definition as `TS7` but used during the fourth sample.
14	IE3	R/W	0	4th Sample Interrupt Enable Same definition as `IE7` but used during the fourth sample.
13	END3	R/W	0	4th Sample is End of Sequence Same definition as `END7` but used during the fourth sample.
12	D3	R/W	0	4th Sample Diff Input Select Same definition as `D7` but used during the fourth sample.
11	TS2	R/W	0	3rd Sample Temp Sensor Select Same definition as `TS7` but used during the third sample.
10	IE2	R/W	0	3rd Sample Interrupt Enable Same definition as `IE7` but used during the third sample.
9	END2	R/W	0	3rd Sample is End of Sequence Same definition as `END7` but used during the third sample.
8	D2	R/W	0	3rd Sample Diff Input Select Same definition as `D7` but used during the third sample.

Bit/Field	Name	Type	Reset	Description
7	TS1	R/W	0	2nd Sample Temp Sensor Select Same definition as `TS7` but used during the second sample.
6	IE1	R/W	0	2nd Sample Interrupt Enable Same definition as `IE7` but used during the second sample.
5	END1	R/W	0	2nd Sample is End of Sequence Same definition as `END7` but used during the second sample.
4	D1	R/W	0	2nd Sample Diff Input Select Same definition as `D7` but used during the second sample.
3	TS0	R/W	0	1st Sample Temp Sensor Select Same definition as `TS7` but used during the first sample.
2	IE0	R/W	0	1st Sample Interrupt Enable Same definition as `IE7` but used during the first sample.
1	END0	R/W	0	1st Sample is End of Sequence Same definition as `END7` but used during the first sample. Since this sequencer has only one entry, this bit must be set.
0	D0	R/W	0	1st Sample Diff Input Select Same definition as `D7` but used during the first sample.

Register 25: ADC Sample Sequence Input Multiplexer Select 3 (ADCSSMUX3), offset 0x0A0

This register defines the analog input configuration for a sample executed with Sample Sequencer 3. This register is 4-bits wide and contains information for one possible sample. See the **ADCSSMUX0** register on page 305 for detailed bit descriptions.

ADC Sample Sequence Input Multiplexer Select 3 (ADCSSMUX3)

Base 0x4003.8000
Offset 0x0A0
Type R/W, reset 0x0000.0000

	31	30	29	28	27	26	25	24	23	22	21	20	19	18	17	16
	reserved															
Type	RO	RO	RO	RO	RO	RO	RO	RO	RO	RO	RO	RO	RO	RO	RO	RO
Reset	0	0	0	0	0	0	0	0	0	0	0	0	0	0	0	0

	15	14	13	12	11	10	9	8	7	6	5	4	3	2	1	0
	reserved														MUX0	
Type	RO	RO	RO	RO	RO	RO	RO	RO	RO	RO	RO	RO	RO	RO	R/W	R/W
Reset	0	0	0	0	0	0	0	0	0	0	0	0	0	0	0	0

Bit/Field	Name	Type	Reset	Description
31:2	reserved	RO	0x0000.000	Software should not rely on the value of a reserved bit. To provide compatibility with future products, the value of a reserved bit should be preserved across a read-modify-write operation.
1:0	MUX0	R/W	0	1st Sample Input Select

Register 26: ADC Sample Sequence Control 3 (ADCSSCTL3), offset 0x0A4

This register contains the configuration information for a sample executed with Sample Sequencer 3. The END bit is always set since there is only one sample in this sequencer. This register is 4-bits wide and contains information for one possible sample. See the **ADCSSCTL0** register on page 307 for detailed bit descriptions.

ADC Sample Sequence Control 3 (ADCSSCTL3)

Base 0x4003.8000
Offset 0x0A4
Type R/W, reset 0x0000.0002

	31	30	29	28	27	26	25	24	23	22	21	20	19	18	17	16
	reserved															
Type	RO	RO	RO	RO	RO	RO	RO	RO	RO	RO	RO	RO	RO	RO	RO	RO
Reset	0	0	0	0	0	0	0	0	0	0	0	0	0	0	0	0

	15	14	13	12	11	10	9	8	7	6	5	4	3	2	1	0
	reserved												TS0	IE0	END0	D0
Type	RO	RO	RO	RO	RO	RO	RO	RO	RO	RO	RO	RO	R/W	R/W	R/W	R/W
Reset	0	0	0	0	0	0	0	0	0	0	0	0	0	0	1	0

Bit/Field	Name	Type	Reset	Description
31:4	reserved	RO	0x0000.000	Software should not rely on the value of a reserved bit. To provide compatibility with future products, the value of a reserved bit should be preserved across a read-modify-write operation.
3	TS0	R/W	0	1st Sample Temp Sensor Select Same definition as TS7 but used during the first sample.
2	IE0	R/W	0	1st Sample Interrupt Enable Same definition as IE7 but used during the first sample.
1	END0	R/W	1	1st Sample is End of Sequence Same definition as END7 but used during the first sample. Since this sequencer has only one entry, this bit must be set.
0	D0	R/W	0	1st Sample Diff Input Select Same definition as D7 but used during the first sample.

Register 27: ADC Test Mode Loopback (ADCTMLB), offset 0x100

This register provides loopback operation within the digital logic of the ADC, which can be useful in debugging software without having to provide actual analog stimulus. This test mode is entered by writing a value of 0x0000.0001 to this register. When data is read from the FIFO in loopback mode, the read-only portion of this register is returned.

ADC Test Mode Loopback (ADCTMLB)

Base 0x4003.8000
Offset 0x100
Type R/W, reset 0x0000.0000

	31	30	29	28	27	26	25	24	23	22	21	20	19	18	17	16
	reserved															
Type	RO	RO	RO	RO	RO	RO	RO	RO	RO	RO	RO	RO	RO	RO	RO	RO
Reset	0	0	0	0	0	0	0	0	0	0	0	0	0	0	0	0

	15	14	13	12	11	10	9	8	7	6	5	4	3	2	1	0
	reserved															LB
Type	RO	RO	RO	RO	RO	RO	RO	RO	RO	RO	RO	RO	RO	RO	RO	R/W
Reset	0	0	0	0	0	0	0	0	0	0	0	0	0	0	0	0

Bit/Field	Name	Type	Reset	Description
31:1	reserved	RO	0x0000.000	Software should not rely on the value of a reserved bit. To provide compatibility with future products, the value of a reserved bit should be preserved across a read-modify-write operation.
0	LB	R/W	0	Loopback Mode Enable When set, forces a loopback within the digital block to provide information on input and unique numbering. The **ADCSSFIFOn** registers do not provide sample data, but instead provide the 10-bit loopback data as shown below.

Bit/Field	Name	Description
9:6	CNT	Continuous Sample Counter Continuous sample counter that is initialized to 0 and counts each sample as it processed. This helps provide a unique value for the data received.
5	CONT	Continuation Sample Indicator When set, indicates that this is a continuation sample. For example, if two sequencers were to run back-to-back, this indicates that the controller kept continuously sampling at full rate.
4	DIFF	Differential Sample Indicator When set, indicates that this is a differential sample.
3	TS	Temp Sensor Sample Indicator When set, indicates that this is a temperature sensor sample.
2:0	MUX	Analog Input Indicator Indicates which analog input is to be sampled.

13 Universal Asynchronous Receivers/Transmitters (UARTs)

Each Stellaris® Universal Asynchronous Receiver/Transmitter (UART) has the following features:

- Two fully programmable 16C550-type UARTs with IrDA support
- Separate 16x8 transmit (TX) and receive (RX) FIFOs to reduce CPU interrupt service loading
- Programmable baud-rate generator allowing speeds up to 3.125 Mbps
- Programmable FIFO length, including 1-byte deep operation providing conventional double-buffered interface
- FIFO trigger levels of 1/8, 1/4, 1/2, 3/4, and 7/8
- Standard asynchronous communication bits for start, stop, and parity
- False-start bit detection
- Line-break generation and detection
- Fully programmable serial interface characteristics
  - 5, 6, 7, or 8 data bits
  - Even, odd, stick, or no-parity bit generation/detection
  - 1 or 2 stop bit generation
- IrDA serial-IR (SIR) encoder/decoder providing
  - Programmable use of IrDA Serial Infrared (SIR) or UART input/output
  - Support of IrDA SIR encoder/decoder functions for data rates up to 115.2 Kbps half-duplex
  - Support of normal 3/16 and low-power (1.41-2.23 µs) bit durations
  - Programmable internal clock generator enabling division of reference clock by 1 to 256 for low-power mode bit duration

13.1 Block Diagram

Figure 13-1. UART Module Block Diagram

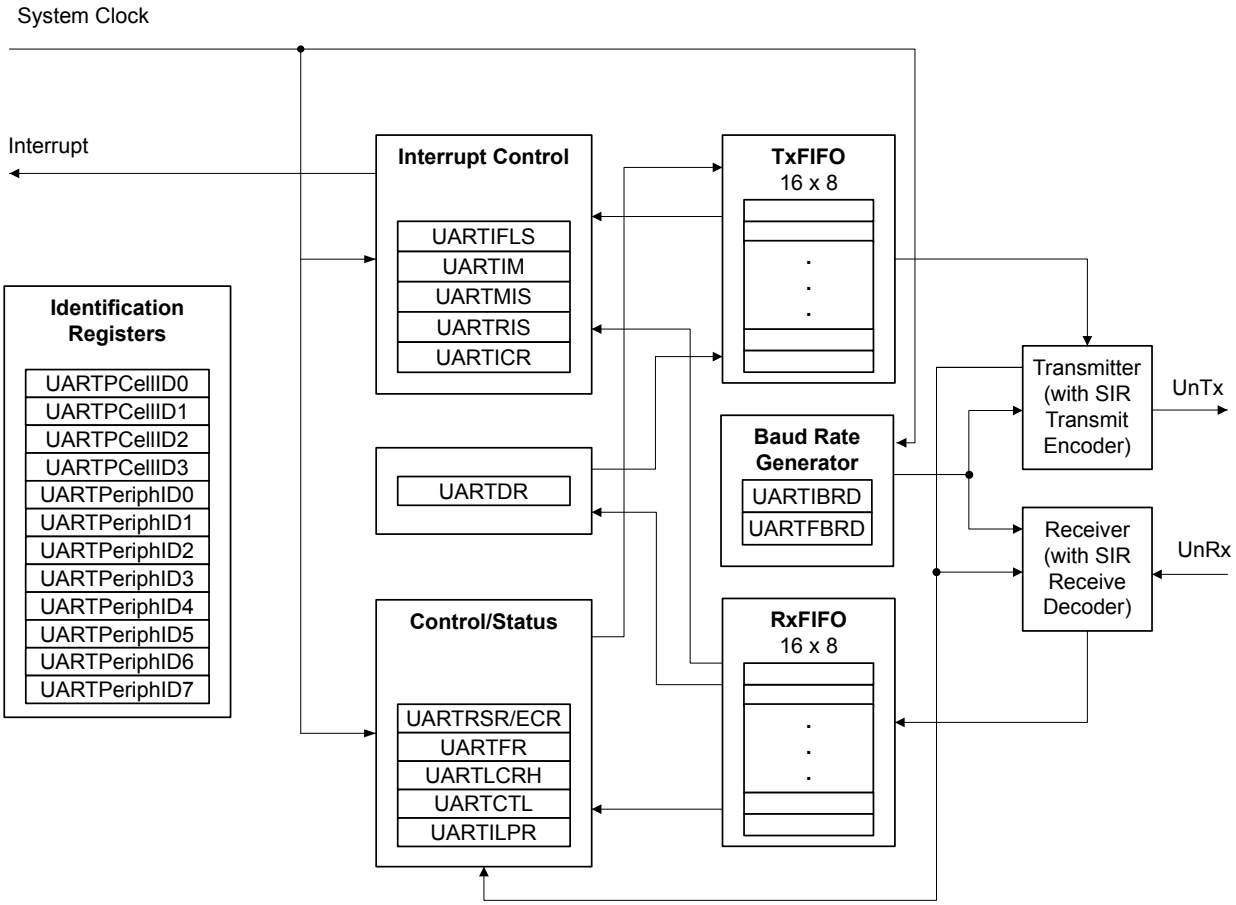

13.2 Functional Description

Each Stellaris® UART performs the functions of parallel-to-serial and serial-to-parallel conversions. It is similar in functionality to a 16C550 UART, but is not register compatible.

The UART is configured for transmit and/or receive via the TXE and RXE bits of the **UART Control (UARTCTL)** register (see page 337). Transmit and receive are both enabled out of reset. Before any control registers are programmed, the UART must be disabled by clearing the UARTEN bit in **UARTCTL**. If the UART is disabled during a TX or RX operation, the current transaction is completed prior to the UART stopping.

The UART peripheral also includes a serial IR (SIR) encoder/decoder block that can be connected to an infrared transceiver to implement an IrDA SIR physical layer. The SIR function is programmed using the UARTCTL register.

13.2.1 Transmit/Receive Logic

The transmit logic performs parallel-to-serial conversion on the data read from the transmit FIFO. The control logic outputs the serial bit stream beginning with a start bit, and followed by the data

bits (LSB first), parity bit, and the stop bits according to the programmed configuration in the control registers. See Figure 13-2 on page 320 for details.

The receive logic performs serial-to-parallel conversion on the received bit stream after a valid start pulse has been detected. Overrun, parity, frame error checking, and line-break detection are also performed, and their status accompanies the data that is written to the receive FIFO.

Figure 13-2. UART Character Frame

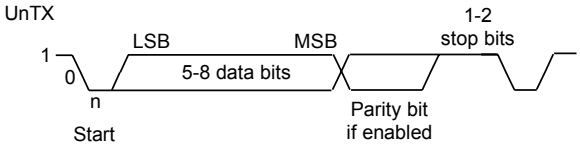

13.2.2 Baud-Rate Generation

The baud-rate divisor is a 22-bit number consisting of a 16-bit integer and a 6-bit fractional part. The number formed by these two values is used by the baud-rate generator to determine the bit period. Having a fractional baud-rate divider allows the UART to generate all the standard baud rates.

The 16-bit integer is loaded through the **UART Integer Baud-Rate Divisor (UARTIBRD)** register (see page 333) and the 6-bit fractional part is loaded with the **UART Fractional Baud-Rate Divisor (UARTFBRD)** register (see page 334). The baud-rate divisor (BRD) has the following relationship to the system clock (where *BRDI* is the integer part of the BRD and *BRDF* is the fractional part, separated by a decimal place.)

```
BRD = BRDI + BRDF = UARTSysClk / (16 * Baud Rate)
```

where UARTSysClk is the system clock connected to the UART.

The 6-bit fractional number (that is to be loaded into the DIVFRAC bit field in the **UARTFBRD** register) can be calculated by taking the fractional part of the baud-rate divisor, multiplying it by 64, and adding 0.5 to account for rounding errors:

```
UARTFBRD[DIVFRAC] = integer(BRDF * 64 + 0.5)
```

The UART generates an internal baud-rate reference clock at 16x the baud-rate (referred to as Baud16). This reference clock is divided by 16 to generate the transmit clock, and is used for error detection during receive operations.

Along with the **UART Line Control, High Byte (UARTLCRH)** register (see page 335), the **UARTIBRD** and **UARTFBRD** registers form an internal 30-bit register. This internal register is only updated when a write operation to **UARTLCRH** is performed, so any changes to the baud-rate divisor must be followed by a write to the **UARTLCRH** register for the changes to take effect.

To update the baud-rate registers, there are four possible sequences:

- **UARTIBRD** write, **UARTFBRD** write, and **UARTLCRH** write
- **UARTFBRD** write, **UARTIBRD** write, and **UARTLCRH** write
- **UARTIBRD** write and **UARTLCRH** write
- **UARTFBRD** write and **UARTLCRH** write

13.2.3 Data Transmission

Data received or transmitted is stored in two 16-byte FIFOs, though the receive FIFO has an extra four bits per character for status information. For transmission, data is written into the transmit FIFO. If the UART is enabled, it causes a data frame to start transmitting with the parameters indicated in the **UARTLCRH** register. Data continues to be transmitted until there is no data left in the transmit FIFO. The BUSY bit in the **UART Flag (UARTFR)** register (see page 330) is asserted as soon as data is written to the transmit FIFO (that is, if the FIFO is non-empty) and remains asserted while data is being transmitted. The BUSY bit is negated only when the transmit FIFO is empty, and the last character has been transmitted from the shift register, including the stop bits. The UART can indicate that it is busy even though the UART may no longer be enabled.

When the receiver is idle (the UnRx is continuously 1) and the data input goes Low (a start bit has been received), the receive counter begins running and data is sampled on the eighth cycle of `Baud16` (described in “Transmit/Receive Logic” on page 319).

The start bit is valid if UnRx is still low on the eighth cycle of `Baud16`, otherwise a false start bit is detected and it is ignored. Start bit errors can be viewed in the **UART Receive Status (UARTRSR)** register (see page 328). If the start bit was valid, successive data bits are sampled on every 16th cycle of `Baud16` (that is, one bit period later) according to the programmed length of the data characters. The parity bit is then checked if parity mode was enabled. Data length and parity are defined in the **UARTLCRH** register.

Lastly, a valid stop bit is confirmed if UnRx is High, otherwise a framing error has occurred. When a full word is received, the data is stored in the receive FIFO, with any error bits associated with that word.

13.2.4 Serial IR (SIR)

The UART peripheral includes an IrDA serial-IR (SIR) encoder/decoder block. The IrDA SIR block provides functionality that converts between an asynchronous UART data stream, and half-duplex serial SIR interface. No analog processing is performed on-chip. The role of the SIR block is to provide a digital encoded output, and decoded input to the UART. The UART signal pins can be connected to an infrared transceiver to implement an IrDA SIR physical layer link. The SIR block has two modes of operation:

- In normal IrDA mode, a zero logic level is transmitted as high pulse of 3/16th duration of the selected baud rate bit period on the output pin, while logic one levels are transmitted as a static LOW signal. These levels control the driver of an infrared transmitter, sending a pulse of light for each zero. On the reception side, the incoming light pulses energize the photo transistor base of the receiver, pulling its output LOW. This drives the UART input pin LOW.
- In low-power IrDA mode, the width of the transmitted infrared pulse is set to three times the period of the internally generated IrLPBaud16 signal (1.63 µs, assuming a nominal 1.8432 MHz frequency) by changing the appropriate bit in the **UARTCR** register. See page 332 for more information on IrDA low-power pulse-duration configuration.

Figure 13-3 on page 322 shows the UART transmit and receive signals, with and without IrDA modulation.

Figure 13-3. IrDA Data Modulation

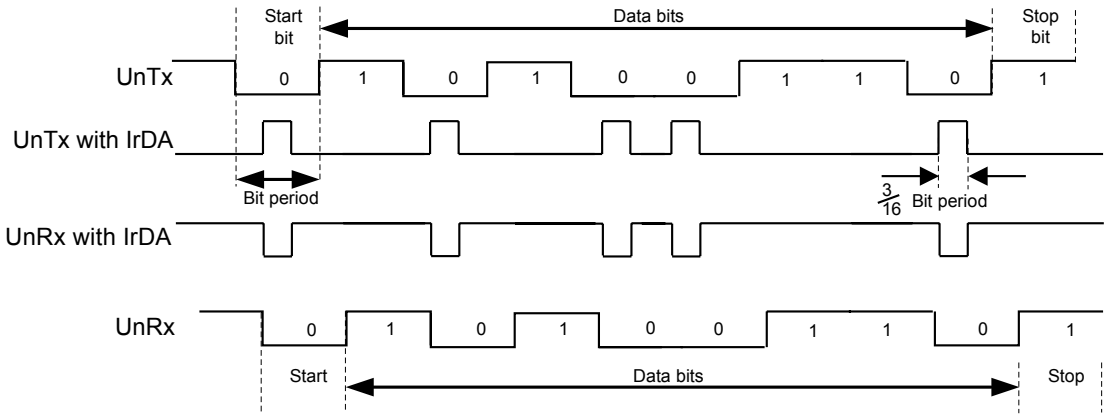

In both normal and low-power IrDA modes:

- During transmission, the UART data bit is used as the base for encoding
- During reception, the decoded bits are transferred to the UART receive logic

The IrDA SIR physical layer specifies a half-duplex communication link, with a minimum 10 ms delay between transmission and reception. This delay must be generated by software because it is not automatically supported by the UART. The delay is required because the infrared receiver electronics might become biased, or even saturated from the optical power coupled from the adjacent transmitter LED. This delay is known as latency, or receiver setup time.

13.2.5 FIFO Operation

The UART has two 16-entry FIFOs; one for transmit and one for receive. Both FIFOs are accessed via the **UART Data (UARTDR)** register (see page 326). Read operations of the **UARTDR** register return a 12-bit value consisting of 8 data bits and 4 error flags while write operations place 8-bit data in the transmit FIFO.

Out of reset, both FIFOs are disabled and act as 1-byte-deep holding registers. The FIFOs are enabled by setting the FEN bit in **UARTLCRH** (page 335).

FIFO status can be monitored via the **UART Flag (UARTFR)** register (see page 330) and the **UART Receive Status (UARTRSR)** register. Hardware monitors empty, full and overrun conditions. The **UARTFR** register contains empty and full flags (TXFE, TXFF, RXFE, and RXFF bits) and the **UARTRSR** register shows overrun status via the OE bit.

The trigger points at which the FIFOs generate interrupts is controlled via the **UART Interrupt FIFO Level Select (UARTIFLS)** register (see page 339). Both FIFOs can be individually configured to trigger interrupts at different levels. Available configurations include 1/8, ¼, ½, ¾, and 7/8. For example, if the ¼ option is selected for the receive FIFO, the UART generates a receive interrupt after 4 data bytes are received. Out of reset, both FIFOs are configured to trigger an interrupt at the ½ mark.

13.2.6 Interrupts

The UART can generate interrupts when the following conditions are observed:

- Overrun Error

- Break Error
- Parity Error
- Framing Error
- Receive Timeout
- Transmit (when condition defined in the `TXIFLSEL` bit in the **UARTIFLS** register is met)
- Receive (when condition defined in the `RXIFLSEL` bit in the **UARTIFLS** register is met)

All of the interrupt events are ORed together before being sent to the interrupt controller, so the UART can only generate a single interrupt request to the controller at any given time. Software can service multiple interrupt events in a single interrupt service routine by reading the **UART Masked Interrupt Status (UARTMIS)** register (see page 344).

The interrupt events that can trigger a controller-level interrupt are defined in the **UART Interrupt Mask (UARTIM**) register (see page 341) by setting the corresponding `IM` bit to 1. If interrupts are not used, the raw interrupt status is always visible via the **UART Raw Interrupt Status (UARTRIS)** register (see page 343).

Interrupts are always cleared (for both the **UARTMIS** and **UARTRIS** registers) by setting the corresponding bit in the **UART Interrupt Clear (UARTICR)** register (see page 345).

The receive timeout interrupt is asserted when the receive FIFO is not empty, and no further data is received over a 32-bit period. The receive timeout interrupt is cleared either when the FIFO becomes empty through reading all the data (or by reading the holding register), or when a 1 is written to the corresponding bit in the **UARTICR** register.

13.2.7 Loopback Operation

The UART can be placed into an internal loopback mode for diagnostic or debug work. This is accomplished by setting the `LBE` bit in the **UARTCTL** register (see page 337). In loopback mode, data transmitted on UnTx is received on the UnRx input.

13.2.8 IrDA SIR block

The IrDA SIR block contains an IrDA serial IR (SIR) protocol encoder/decoder. When enabled, the SIR block uses the `UnTx` and `UnRx` pins for the SIR protocol, which should be connected to an IR transceiver.

The SIR block can receive and transmit, but it is only half-duplex so it cannot do both at the same time. Transmission must be stopped before data can be received. The IrDA SIR physical layer specifies a minimum 10-ms delay between transmission and reception.

13.3 Initialization and Configuration

To use the UARTs, the peripheral clock must be enabled by setting the `UART0` or `UART1` bits in the **RCGC1** register.

This section discusses the steps that are required to use a UART module. For this example, the UART clock is assumed to be 20 MHz and the desired UART configuration is:

- 115200 baud rate
- Data length of 8 bits

- One stop bit
- No parity
- FIFOs disabled
- No interrupts

The first thing to consider when programming the UART is the baud-rate divisor (BRD), since the **UARTIBRD** and **UARTFBRD** registers must be written before the **UARTLCRH** register. Using the equation described in "Baud-Rate Generation" on page 320, the BRD can be calculated:

```
BRD = 20,000,000 / (16 * 115,200) = 10.8507
```

which means that the `DIVINT` field of the **UARTIBRD** register (see page 333) should be set to 10. The value to be loaded into the **UARTFBRD** register (see page 334) is calculated by the equation:

```
UARTFBRD[DIVFRAC] = integer(0.8507 * 64 + 0.5) = 54
```

With the BRD values in hand, the UART configuration is written to the module in the following order:

1. Disable the UART by clearing the `UARTEN` bit in the **UARTCTL** register.
2. Write the integer portion of the BRD to the **UARTIBRD** register.
3. Write the fractional portion of the BRD to the **UARTFBRD** register.
4. Write the desired serial parameters to the **UARTLCRH** register (in this case, a value of 0x0000.0060).
5. Enable the UART by setting the `UARTEN` bit in the **UARTCTL** register.

13.4 Register Map

Table 13-1 on page 324 lists the UART registers. The offset listed is a hexadecimal increment to the register's address, relative to that UART's base address:

- UART0: 0x4000.C000
- UART1: 0x4000.D000

Note: The UART must be disabled (see the `UARTEN` bit in the **UARTCTL** register on page 337) before any of the control registers are reprogrammed. When the UART is disabled during a TX or RX operation, the current transaction is completed prior to the UART stopping.

Table 13-1. UART Register Map

Offset	Name	Type	Reset	Description	See page
0x000	UARTDR	R/W	0x0000.0000	UART Data	326
0x004	UARTRSR/UARTECR	R/W	0x0000.0000	UART Receive Status/Error Clear	328
0x018	UARTFR	RO	0x0000.0090	UART Flag	330
0x020	UARTILPR	R/W	0x0000.0000	UART IrDA Low-Power Register	332
0x024	UARTIBRD	R/W	0x0000.0000	UART Integer Baud-Rate Divisor	333

Offset	Name	Type	Reset	Description	See page
0x028	UARTFBRD	R/W	0x0000.0000	UART Fractional Baud-Rate Divisor	334
0x02C	UARTLCRH	R/W	0x0000.0000	UART Line Control	335
0x030	UARTCTL	R/W	0x0000.0300	UART Control	337
0x034	UARTIFLS	R/W	0x0000.0012	UART Interrupt FIFO Level Select	339
0x038	UARTIM	R/W	0x0000.0000	UART Interrupt Mask	341
0x03C	UARTRIS	RO	0x0000.000F	UART Raw Interrupt Status	343
0x040	UARTMIS	RO	0x0000.0000	UART Masked Interrupt Status	344
0x044	UARTICR	W1C	0x0000.0000	UART Interrupt Clear	345
0xFD0	UARTPeriphID4	RO	0x0000.0000	UART Peripheral Identification 4	347
0xFD4	UARTPeriphID5	RO	0x0000.0000	UART Peripheral Identification 5	348
0xFD8	UARTPeriphID6	RO	0x0000.0000	UART Peripheral Identification 6	349
0xFDC	UARTPeriphID7	RO	0x0000.0000	UART Peripheral Identification 7	350
0xFE0	UARTPeriphID0	RO	0x0000.0011	UART Peripheral Identification 0	351
0xFE4	UARTPeriphID1	RO	0x0000.0000	UART Peripheral Identification 1	352
0xFE8	UARTPeriphID2	RO	0x0000.0018	UART Peripheral Identification 2	353
0xFEC	UARTPeriphID3	RO	0x0000.0001	UART Peripheral Identification 3	354
0xFF0	UARTPCellID0	RO	0x0000.000D	UART PrimeCell Identification 0	355
0xFF4	UARTPCellID1	RO	0x0000.00F0	UART PrimeCell Identification 1	356
0xFF8	UARTPCellID2	RO	0x0000.0005	UART PrimeCell Identification 2	357
0xFFC	UARTPCellID3	RO	0x0000.00B1	UART PrimeCell Identification 3	358

13.5 Register Descriptions

The remainder of this section lists and describes the UART registers, in numerical order by address offset.

Register 1: UART Data (UARTDR), offset 0x000

This register is the data register (the interface to the FIFOs).

When FIFOs are enabled, data written to this location is pushed onto the transmit FIFO. If FIFOs are disabled, data is stored in the transmitter holding register (the bottom word of the transmit FIFO). A write to this register initiates a transmission from the UART.

For received data, if the FIFO is enabled, the data byte and the 4-bit status (break, frame, parity, and overrun) is pushed onto the 12-bit wide receive FIFO. If FIFOs are disabled, the data byte and status are stored in the receiving holding register (the bottom word of the receive FIFO). The received data can be retrieved by reading this register.

UART Data (UARTDR)

UART0 base: 0x4000.C000
UART1 base: 0x4000.D000
Offset 0x000
Type R/W, reset 0x0000.0000

	31	30	29	28	27	26	25	24	23	22	21	20	19	18	17	16
	reserved															
Type	RO	RO	RO	RO	RO	RO	RO	RO	RO	RO	RO	RO	RO	RO	RO	RO
Reset	0	0	0	0	0	0	0	0	0	0	0	0	0	0	0	0

	15	14	13	12	11	10	9	8	7	6	5	4	3	2	1	0
	reserved				OE	BE	PE	FE	DATA							
Type	RO	RO	RO	RO	RO	RO	RO	RO	R/W	R/W	R/W	R/W	R/W	R/W	R/W	R/W
Reset	0	0	0	0	0	0	0	0	0	0	0	0	0	0	0	0

Bit/Field	Name	Type	Reset	Description
31:12	reserved	RO	0	Software should not rely on the value of a reserved bit. To provide compatibility with future products, the value of a reserved bit should be preserved across a read-modify-write operation.
11	OE	RO	0	UART Overrun Error The OE values are defined as follows: Value Description 0 There has been no data loss due to a FIFO overrun. 1 New data was received when the FIFO was full, resulting in data loss.
10	BE	RO	0	UART Break Error This bit is set to 1 when a break condition is detected, indicating that the receive data input was held Low for longer than a full-word transmission time (defined as start, data, parity, and stop bits). In FIFO mode, this error is associated with the character at the top of the FIFO. When a break occurs, only one 0 character is loaded into the FIFO. The next character is only enabled after the received data input goes to a 1 (marking state) and the next valid start bit is received.

Bit/Field	Name	Type	Reset	Description
9	PE	RO	0	UART Parity Error This bit is set to 1 when the parity of the received data character does not match the parity defined by bits 2 and 7 of the **UARTLCRH** register. In FIFO mode, this error is associated with the character at the top of the FIFO.
8	FE	RO	0	UART Framing Error This bit is set to 1 when the received character does not have a valid stop bit (a valid stop bit is 1).
7:0	DATA	R/W	0	Data Transmitted or Received When written, the data that is to be transmitted via the UART. When read, the data that was received by the UART.

Register 2: UART Receive Status/Error Clear (UARTRSR/UARTECR), offset 0x004

The **UARTRSR/UARTECR** register is the receive status register/error clear register.

In addition to the **UARTDR** register, receive status can also be read from the **UARTRSR** register. If the status is read from this register, then the status information corresponds to the entry read from **UARTDR** prior to reading **UARTRSR**. The status information for overrun is set immediately when an overrun condition occurs.

The **UARTRSR** register cannot be written.

A write of any value to the **UARTECR** register clears the framing, parity, break, and overrun errors. All the bits are cleared to 0 on reset.

Reads

UART Receive Status/Error Clear (UARTRSR/UARTECR)

UART0 base: 0x4000.C000
UART1 base: 0x4000.D000
Offset 0x004
Type RO, reset 0x0000.0000

	31	30	29	28	27	26	25	24	23	22	21	20	19	18	17	16
	reserved															
Type	RO	RO	RO	RO	RO	RO	RO	RO	RO	RO	RO	RO	RO	RO	RO	RO
Reset	0	0	0	0	0	0	0	0	0	0	0	0	0	0	0	0

	15	14	13	12	11	10	9	8	7	6	5	4	3	2	1	0
	reserved												OE	BE	PE	FE
Type	RO	RO	RO	RO	RO	RO	RO	RO	RO	RO	RO	RO	RO	RO	RO	RO
Reset	0	0	0	0	0	0	0	0	0	0	0	0	0	0	0	0

Bit/Field	Name	Type	Reset	Description
31:4	reserved	RO	0	Software should not rely on the value of a reserved bit. To provide compatibility with future products, the value of a reserved bit should be preserved across a read-modify-write operation.
3	OE	RO	0	UART Overrun Error When this bit is set to 1, data is received and the FIFO is already full. This bit is cleared to 0 by a write to **UARTECR**. The FIFO contents remain valid since no further data is written when the FIFO is full, only the contents of the shift register are overwritten. The CPU must now read the data in order to empty the FIFO.
2	BE	RO	0	UART Break Error This bit is set to 1 when a break condition is detected, indicating that the received data input was held Low for longer than a full-word transmission time (defined as start, data, parity, and stop bits). This bit is cleared to 0 by a write to **UARTECR**. In FIFO mode, this error is associated with the character at the top of the FIFO. When a break occurs, only one 0 character is loaded into the FIFO. The next character is only enabled after the receive data input goes to a 1 (marking state) and the next valid start bit is received.

Bit/Field	Name	Type	Reset	Description
1	PE	RO	0	UART Parity Error This bit is set to 1 when the parity of the received data character does not match the parity defined by bits 2 and 7 of the **UARTLCRH** register. This bit is cleared to 0 by a write to **UARTECR**.
0	FE	RO	0	UART Framing Error This bit is set to 1 when the received character does not have a valid stop bit (a valid stop bit is 1). This bit is cleared to 0 by a write to **UARTECR**. In FIFO mode, this error is associated with the character at the top of the FIFO.

Writes

UART Receive Status/Error Clear (UARTRSR/UARTECR)

UART0 base: 0x4000.C000
UART1 base: 0x4000.D000
Offset 0x004
Type WO, reset 0x0000.0000

	31	30	29	28	27	26	25	24	23	22	21	20	19	18	17	16
	reserved															
Type	WO	WO	WO	WO	WO	WO	WO	WO	WO	WO	WO	WO	WO	WO	WO	WO
Reset	0	0	0	0	0	0	0	0	0	0	0	0	0	0	0	0

	15	14	13	12	11	10	9	8	7	6	5	4	3	2	1	0
	reserved								DATA							
Type	WO	WO	WO	WO	WO	WO	WO	WO	WO	WO	WO	WO	WO	WO	WO	WO
Reset	0	0	0	0	0	0	0	0	0	0	0	0	0	0	0	0

Bit/Field	Name	Type	Reset	Description
31:8	reserved	WO	0	Software should not rely on the value of a reserved bit. To provide compatibility with future products, the value of a reserved bit should be preserved across a read-modify-write operation.
7:0	DATA	WO	0	Error Clear A write to this register of any data clears the framing, parity, break, and overrun flags.

Register 3: UART Flag (UARTFR), offset 0x018

The **UARTFR** register is the flag register. After reset, the TXFF, RXFF, and BUSY bits are 0, and TXFE and RXFE bits are 1.

UART Flag (UARTFR)

UART0 base: 0x4000.C000
UART1 base: 0x4000.D000
Offset 0x018
Type RO, reset 0x0000.0090

	31	30	29	28	27	26	25	24	23	22	21	20	19	18	17	16
	reserved															
Type	RO	RO	RO	RO	RO	RO	RO	RO	RO	RO	RO	RO	RO	RO	RO	RO
Reset	0	0	0	0	0	0	0	0	0	0	0	0	0	0	0	0

	15	14	13	12	11	10	9	8	7	6	5	4	3	2	1	0
	reserved								TXFE	RXFF	TXFF	RXFE	BUSY	reserved		
Type	RO	RO	RO	RO	RO	RO	RO	RO	RO	RO	RO	RO	RO	RO	RO	RO
Reset	0	0	0	0	0	0	0	0	1	0	0	1	0	0	0	0

Bit/Field	Name	Type	Reset	Description
31:8	reserved	RO	0	Software should not rely on the value of a reserved bit. To provide compatibility with future products, the value of a reserved bit should be preserved across a read-modify-write operation.
7	TXFE	RO	1	UART Transmit FIFO Empty The meaning of this bit depends on the state of the FEN bit in the **UARTLCRH** register. If the FIFO is disabled (FEN is 0), this bit is set when the transmit holding register is empty. If the FIFO is enabled (FEN is 1), this bit is set when the transmit FIFO is empty.
6	RXFF	RO	0	UART Receive FIFO Full The meaning of this bit depends on the state of the FEN bit in the **UARTLCRH** register. If the FIFO is disabled, this bit is set when the receive holding register is full. If the FIFO is enabled, this bit is set when the receive FIFO is full.
5	TXFF	RO	0	UART Transmit FIFO Full The meaning of this bit depends on the state of the FEN bit in the **UARTLCRH** register. If the FIFO is disabled, this bit is set when the transmit holding register is full. If the FIFO is enabled, this bit is set when the transmit FIFO is full.

Bit/Field	Name	Type	Reset	Description
4	RXFE	RO	1	UART Receive FIFO Empty The meaning of this bit depends on the state of the FEN bit in the **UARTLCRH** register. If the FIFO is disabled, this bit is set when the receive holding register is empty. If the FIFO is enabled, this bit is set when the receive FIFO is empty.
3	BUSY	RO	0	UART Busy When this bit is 1, the UART is busy transmitting data. This bit remains set until the complete byte, including all stop bits, has been sent from the shift register. This bit is set as soon as the transmit FIFO becomes non-empty (regardless of whether UART is enabled).
2:0	reserved	RO	0	Software should not rely on the value of a reserved bit. To provide compatibility with future products, the value of a reserved bit should be preserved across a read-modify-write operation.

Register 4: UART IrDA Low-Power Register (UARTILPR), offset 0x020

The **UARTILPR** register is an 8-bit read/write register that stores the low-power counter divisor value used to derive the low-power SIR pulse width clock by dividing down the system clock (SysClk). All the bits are cleared to 0 when reset.

The internal `IrLPBaud16` clock is generated by dividing down SysClk according to the low-power divisor value written to **UARTILPR**. The duration of SIR pulses generated when low-power mode is enabled is three times the period of the `IrLPBaud16` clock. The low-power divisor value is calculated as follows:

$$\texttt{ILPDVSR} = \texttt{SysClk} / F_{\texttt{IrLPBaud16}}$$

where $F_{\texttt{IrLPBaud16}}$ is nominally 1.8432 MHz.

You must choose the divisor so that 1.42 MHz < $F_{\texttt{IrLPBaud16}}$ < 2.12 MHz, which results in a low-power pulse duration of 1.41–2.11 µs (three times the period of `IrLPBaud16`). The minimum frequency of `IrLPBaud16` ensures that pulses less than one period of `IrLPBaud16` are rejected, but that pulses greater than 1.4 µs are accepted as valid pulses.

Note: Zero is an illegal value. Programming a zero value results in no `IrLPBaud16` pulses being generated.

UART IrDA Low-Power Register (UARTILPR)

UART0 base: 0x4000.C000
UART1 base: 0x4000.D000
Offset 0x020
Type R/W, reset 0x0000.0000

	31	30	29	28	27	26	25	24	23	22	21	20	19	18	17	16
	reserved															
Type	RO	RO	RO	RO	RO	RO	RO	RO	RO	RO	RO	RO	RO	RO	RO	RO
Reset	0	0	0	0	0	0	0	0	0	0	0	0	0	0	0	0

	15	14	13	12	11	10	9	8	7	6	5	4	3	2	1	0
	reserved								ILPDVSR							
Type	RO	RO	RO	RO	RO	RO	RO	RO	R/W	R/W	R/W	R/W	R/W	R/W	R/W	R/W
Reset	0	0	0	0	0	0	0	0	0	0	0	0	0	0	0	0

Bit/Field	Name	Type	Reset	Description
31:8	reserved	RO	0	Software should not rely on the value of a reserved bit. To provide compatibility with future products, the value of a reserved bit should be preserved across a read-modify-write operation.
7:0	ILPDVSR	R/W	0x00	IrDA Low-Power Divisor This is an 8-bit low-power divisor value.

Register 5: UART Integer Baud-Rate Divisor (UARTIBRD), offset 0x024

The **UARTIBRD** register is the integer part of the baud-rate divisor value. All the bits are cleared on reset. The minimum possible divide ratio is 1 (when **UARTIBRD**=0), in which case the **UARTFBRD** register is ignored. When changing the **UARTIBRD** register, the new value does not take effect until transmission/reception of the current character is complete. Any changes to the baud-rate divisor must be followed by a write to the **UARTLCRH** register. See “Baud-Rate Generation” on page 320 for configuration details.

UART Integer Baud-Rate Divisor (UARTIBRD)

UART0 base: 0x4000.C000
UART1 base: 0x4000.D000
Offset 0x024
Type R/W, reset 0x0000.0000

	31	30	29	28	27	26	25	24	23	22	21	20	19	18	17	16
	reserved															
Type	RO	RO	RO	RO	RO	RO	RO	RO	RO	RO	RO	RO	RO	RO	RO	RO
Reset	0	0	0	0	0	0	0	0	0	0	0	0	0	0	0	0

	15	14	13	12	11	10	9	8	7	6	5	4	3	2	1	0
	DIVINT															
Type	R/W	R/W	R/W	R/W	R/W	R/W	R/W	R/W	R/W	R/W	R/W	R/W	R/W	R/W	R/W	R/W
Reset	0	0	0	0	0	0	0	0	0	0	0	0	0	0	0	0

Bit/Field	Name	Type	Reset	Description
31:16	reserved	RO	0	Software should not rely on the value of a reserved bit. To provide compatibility with future products, the value of a reserved bit should be preserved across a read-modify-write operation.
15:0	DIVINT	R/W	0x0000	Integer Baud-Rate Divisor

Register 6: UART Fractional Baud-Rate Divisor (UARTFBRD), offset 0x028

The **UARTFBRD** register is the fractional part of the baud-rate divisor value. All the bits are cleared on reset. When changing the **UARTFBRD** register, the new value does not take effect until transmission/reception of the current character is complete. Any changes to the baud-rate divisor must be followed by a write to the **UARTLCRH** register. See “Baud-Rate Generation” on page 320 for configuration details.

UART Fractional Baud-Rate Divisor (UARTFBRD)

UART0 base: 0x4000.C000
UART1 base: 0x4000.D000
Offset 0x028
Type R/W, reset 0x0000.0000

	31	30	29	28	27	26	25	24	23	22	21	20	19	18	17	16
	reserved															
Type	RO	RO	RO	RO	RO	RO	RO	RO	RO	RO	RO	RO	RO	RO	RO	RO
Reset	0	0	0	0	0	0	0	0	0	0	0	0	0	0	0	0

	15	14	13	12	11	10	9	8	7	6	5	4	3	2	1	0
	reserved										DIVFRAC					
Type	RO	RO	RO	RO	RO	RO	RO	RO	RO	RO	R/W	R/W	R/W	R/W	R/W	R/W
Reset	0	0	0	0	0	0	0	0	0	0	0	0	0	0	0	0

Bit/Field	Name	Type	Reset	Description
31:6	reserved	RO	0x00	Software should not rely on the value of a reserved bit. To provide compatibility with future products, the value of a reserved bit should be preserved across a read-modify-write operation.
5:0	DIVFRAC	R/W	0x000	Fractional Baud-Rate Divisor

Register 7: UART Line Control (UARTLCRH), offset 0x02C

The **UARTLCRH** register is the line control register. Serial parameters such as data length, parity, and stop bit selection are implemented in this register.

When updating the baud-rate divisor (**UARTIBRD** and/or **UARTIFRD**), the **UARTLCRH** register must also be written. The write strobe for the baud-rate divisor registers is tied to the **UARTLCRH** register.

UART Line Control (UARTLCRH)

UART0 base: 0x4000.C000
UART1 base: 0x4000.D000
Offset 0x02C
Type R/W, reset 0x0000.0000

	31	30	29	28	27	26	25	24	23	22	21	20	19	18	17	16
	reserved															
Type	RO	RO	RO	RO	RO	RO	RO	RO	RO	RO	RO	RO	RO	RO	RO	RO
Reset	0	0	0	0	0	0	0	0	0	0	0	0	0	0	0	0

	15	14	13	12	11	10	9	8	7	6	5	4	3	2	1	0
	reserved								SPS	WLEN		FEN	STP2	EPS	PEN	BRK
Type	RO	RO	RO	RO	RO	RO	RO	RO	R/W	R/W	R/W	R/W	R/W	R/W	R/W	R/W
Reset	0	0	0	0	0	0	0	0	0	0	0	0	0	0	0	0

Bit/Field	Name	Type	Reset	Description
31:8	reserved	RO	0	Software should not rely on the value of a reserved bit. To provide compatibility with future products, the value of a reserved bit should be preserved across a read-modify-write operation.
7	SPS	R/W	0	UART Stick Parity Select When bits 1, 2, and 7 of **UARTLCRH** are set, the parity bit is transmitted and checked as a 0. When bits 1 and 7 are set and 2 is cleared, the parity bit is transmitted and checked as a 1. When this bit is cleared, stick parity is disabled.
6:5	WLEN	R/W	0	UART Word Length The bits indicate the number of data bits transmitted or received in a frame as follows: Value Description 0x3 8 bits 0x2 7 bits 0x1 6 bits 0x0 5 bits (default)
4	FEN	R/W	0	UART Enable FIFOs If this bit is set to 1, transmit and receive FIFO buffers are enabled (FIFO mode). When cleared to 0, FIFOs are disabled (Character mode). The FIFOs become 1-byte-deep holding registers.

Bit/Field	Name	Type	Reset	Description
3	STP2	R/W	0	UART Two Stop Bits Select If this bit is set to 1, two stop bits are transmitted at the end of a frame. The receive logic does not check for two stop bits being received.
2	EPS	R/W	0	UART Even Parity Select If this bit is set to 1, even parity generation and checking is performed during transmission and reception, which checks for an even number of 1s in data and parity bits. When cleared to 0, then odd parity is performed, which checks for an odd number of 1s. This bit has no effect when parity is disabled by the PEN bit.
1	PEN	R/W	0	UART Parity Enable If this bit is set to 1, parity checking and generation is enabled; otherwise, parity is disabled and no parity bit is added to the data frame.
0	BRK	R/W	0	UART Send Break If this bit is set to 1, a Low level is continually output on the UnTX output, after completing transmission of the current character. For the proper execution of the break command, the software must set this bit for at least two frames (character periods). For normal use, this bit must be cleared to 0.

Register 8: UART Control (UARTCTL), offset 0x030

The **UARTCTL** register is the control register. All the bits are cleared on reset except for the `Transmit Enable (TXE)` and `Receive Enable (RXE)` bits, which are set to 1.

To enable the UART module, the `UARTEN` bit must be set to 1. If software requires a configuration change in the module, the `UARTEN` bit must be cleared before the configuration changes are written. If the UART is disabled during a transmit or receive operation, the current transaction is completed prior to the UART stopping.

Note: The **UARTCTL** register should not be changed while the UART is enabled or else the results are unpredictable. The following sequence is recommended for making changes to the **UARTCTL** register.

1. Disable the UART.
2. Wait for the end of transmission or reception of the current character.
3. Flush the transmit FIFO by disabling bit 4 (`FEN`) in the line control register (**UARTLCRH**).
4. Reprogram the control register.
5. Enable the UART.

UART Control (UARTCTL)

UART0 base: 0x4000.C000
UART1 base: 0x4000.D000
Offset 0x030
Type R/W, reset 0x0000.0300

	31	30	29	28	27	26	25	24	23	22	21	20	19	18	17	16
	reserved															
Type	RO	RO	RO	RO	RO	RO	RO	RO	RO	RO	RO	RO	RO	RO	RO	RO
Reset	0	0	0	0	0	0	0	0	0	0	0	0	0	0	0	0

	15	14	13	12	11	10	9	8	7	6	5	4	3	2	1	0
	reserved						RXE	TXE	LBE	reserved				SIRLP	SIREN	UARTEN
Type	RO	RO	RO	RO	RO	RO	R/W	R/W	R/W	RO	RO	RO	RO	R/W	R/W	R/W
Reset	0	0	0	0	0	0	1	1	0	0	0	0	0	0	0	0

Bit/Field	Name	Type	Reset	Description
31:10	reserved	RO	0	Software should not rely on the value of a reserved bit. To provide compatibility with future products, the value of a reserved bit should be preserved across a read-modify-write operation.
9	RXE	R/W	1	UART Receive Enable If this bit is set to 1, the receive section of the UART is enabled. When the UART is disabled in the middle of a receive, it completes the current character before stopping. **Note:** To enable reception, the `UARTEN` bit must also be set.
8	TXE	R/W	1	UART Transmit Enable If this bit is set to 1, the transmit section of the UART is enabled. When the UART is disabled in the middle of a transmission, it completes the current character before stopping. **Note:** To enable transmission, the `UARTEN` bit must also be set.

Bit/Field	Name	Type	Reset	Description
7	LBE	R/W	0	UART Loop Back Enable If this bit is set to 1, the `UnTX` path is fed through the `UnRX` path.
6:3	reserved	RO	0	Software should not rely on the value of a reserved bit. To provide compatibility with future products, the value of a reserved bit should be preserved across a read-modify-write operation.
2	SIRLP	R/W	0	UART SIR Low Power Mode This bit selects the IrDA encoding mode. If this bit is cleared to 0, low-level bits are transmitted as an active High pulse with a width of 3/16th of the bit period. If this bit is set to 1, low-level bits are transmitted with a pulse width which is 3 times the period of the `IrLPBaud16` input signal, regardless of the selected bit rate. Setting this bit uses less power, but might reduce transmission distances. See page 332 for more information.
1	SIREN	R/W	0	UART SIR Enable If this bit is set to 1, the IrDA SIR block is enabled, and the UART will transmit and receive data using SIR protocol.
0	UARTEN	R/W	0	UART Enable If this bit is set to 1, the UART is enabled. When the UART is disabled in the middle of transmission or reception, it completes the current character before stopping.

Register 9: UART Interrupt FIFO Level Select (UARTIFLS), offset 0x034

The **UARTIFLS** register is the interrupt FIFO level select register. You can use this register to define the FIFO level at which the `TXRIS` and `RXRIS` bits in the **UARTRIS** register are triggered.

The interrupts are generated based on a transition through a level rather than being based on the level. That is, the interrupts are generated when the fill level progresses through the trigger level. For example, if the receive trigger level is set to the half-way mark, the interrupt is triggered as the module is receiving the 9th character.

Out of reset, the `TXIFLSEL` and `RXIFLSEL` bits are configured so that the FIFOs trigger an interrupt at the half-way mark.

UART Interrupt FIFO Level Select (UARTIFLS)

UART0 base: 0x4000.C000
UART1 base: 0x4000.D000
Offset 0x034
Type R/W, reset 0x0000.0012

	31	30	29	28	27	26	25	24	23	22	21	20	19	18	17	16
	reserved															
Type	RO	RO	RO	RO	RO	RO	RO	RO	RO	RO	RO	RO	RO	RO	RO	RO
Reset	0	0	0	0	0	0	0	0	0	0	0	0	0	0	0	0

	15	14	13	12	11	10	9	8	7	6	5	4	3	2	1	0
	reserved										RXIFLSEL			TXIFLSEL		
Type	RO	RO	RO	RO	RO	RO	RO	RO	RO	RO	R/W	R/W	R/W	R/W	R/W	R/W
Reset	0	0	0	0	0	0	0	0	0	0	0	1	0	0	1	0

Bit/Field	Name	Type	Reset	Description
31:6	reserved	RO	0x00	Software should not rely on the value of a reserved bit. To provide compatibility with future products, the value of a reserved bit should be preserved across a read-modify-write operation.
5:3	RXIFLSEL	R/W	0x2	UART Receive Interrupt FIFO Level Select The trigger points for the receive interrupt are as follows:

Value	Description
0x0	RX FIFO ≥ 1/8 full
0x1	RX FIFO ≥ ¼ full
0x2	RX FIFO ≥ ½ full (default)
0x3	RX FIFO ≥ ¾ full
0x4	RX FIFO ≥ 7/8 full
0x5-0x7	Reserved

Bit/Field	Name	Type	Reset	Description
2:0	TXIFLSEL	R/W	0x2	UART Transmit Interrupt FIFO Level Select The trigger points for the transmit interrupt are as follows: Value — Description 0x0 — TX FIFO ≤ 1/8 full 0x1 — TX FIFO ≤ ¼ full 0x2 — TX FIFO ≤ ½ full (default) 0x3 — TX FIFO ≤ ¾ full 0x4 — TX FIFO ≤ 7/8 full 0x5-0x7 — Reserved

Register 10: UART Interrupt Mask (UARTIM), offset 0x038

The **UARTIM** register is the interrupt mask set/clear register.

On a read, this register gives the current value of the mask on the relevant interrupt. Writing a 1 to a bit allows the corresponding raw interrupt signal to be routed to the interrupt controller. Writing a 0 prevents the raw interrupt signal from being sent to the interrupt controller.

UART Interrupt Mask (UARTIM)

UART0 base: 0x4000.C000
UART1 base: 0x4000.D000
Offset 0x038
Type R/W, reset 0x0000.0000

	31	30	29	28	27	26	25	24	23	22	21	20	19	18	17	16
	reserved															
Type	RO	RO	RO	RO	RO	RO	RO	RO	RO	RO	RO	RO	RO	RO	RO	RO
Reset	0	0	0	0	0	0	0	0	0	0	0	0	0	0	0	0

	15	14	13	12	11	10	9	8	7	6	5	4	3	2	1	0
	reserved					OEIM	BEIM	PEIM	FEIM	RTIM	TXIM	RXIM	reserved			
Type	RO	RO	RO	RO	RO	R/W	R/W	R/W	R/W	R/W	R/W	R/W	RO	RO	RO	RO
Reset	0	0	0	0	0	0	0	0	0	0	0	0	0	0	0	0

Bit/Field	Name	Type	Reset	Description
31:11	reserved	RO	0x00	Software should not rely on the value of a reserved bit. To provide compatibility with future products, the value of a reserved bit should be preserved across a read-modify-write operation.
10	OEIM	R/W	0	UART Overrun Error Interrupt Mask On a read, the current mask for the `OEIM` interrupt is returned. Setting this bit to 1 promotes the `OEIM` interrupt to the interrupt controller.
9	BEIM	R/W	0	UART Break Error Interrupt Mask On a read, the current mask for the `BEIM` interrupt is returned. Setting this bit to 1 promotes the `BEIM` interrupt to the interrupt controller.
8	PEIM	R/W	0	UART Parity Error Interrupt Mask On a read, the current mask for the `PEIM` interrupt is returned. Setting this bit to 1 promotes the `PEIM` interrupt to the interrupt controller.
7	FEIM	R/W	0	UART Framing Error Interrupt Mask On a read, the current mask for the `FEIM` interrupt is returned. Setting this bit to 1 promotes the `FEIM` interrupt to the interrupt controller.
6	RTIM	R/W	0	UART Receive Time-Out Interrupt Mask On a read, the current mask for the `RTIM` interrupt is returned. Setting this bit to 1 promotes the `RTIM` interrupt to the interrupt controller.
5	TXIM	R/W	0	UART Transmit Interrupt Mask On a read, the current mask for the `TXIM` interrupt is returned. Setting this bit to 1 promotes the `TXIM` interrupt to the interrupt controller.

Bit/Field	Name	Type	Reset	Description
4	RXIM	R/W	0	UART Receive Interrupt Mask On a read, the current mask for the `RXIM` interrupt is returned. Setting this bit to 1 promotes the `RXIM` interrupt to the interrupt controller.
3:0	reserved	RO	0x00	Software should not rely on the value of a reserved bit. To provide compatibility with future products, the value of a reserved bit should be preserved across a read-modify-write operation.

Register 11: UART Raw Interrupt Status (UARTRIS), offset 0x03C

The **UARTRIS** register is the raw interrupt status register. On a read, this register gives the current raw status value of the corresponding interrupt. A write has no effect.

UART Raw Interrupt Status (UARTRIS)

UART0 base: 0x4000.C000
UART1 base: 0x4000.D000
Offset 0x03C
Type RO, reset 0x0000.000F

	31	30	29	28	27	26	25	24	23	22	21	20	19	18	17	16
	reserved															
Type	RO	RO	RO	RO	RO	RO	RO	RO	RO	RO	RO	RO	RO	RO	RO	RO
Reset	0	0	0	0	0	0	0	0	0	0	0	0	0	0	0	0

	15	14	13	12	11	10	9	8	7	6	5	4	3	2	1	0
	reserved					OERIS	BERIS	PERIS	FERIS	RTRIS	TXRIS	RXRIS	reserved			
Type	RO	RO	RO	RO	RO	RO	RO	RO	RO	RO	RO	RO	RO	RO	RO	RO
Reset	0	0	0	0	0	0	0	0	0	0	0	0	1	1	1	1

Bit/Field	Name	Type	Reset	Description
31:11	reserved	RO	0x00	Software should not rely on the value of a reserved bit. To provide compatibility with future products, the value of a reserved bit should be preserved across a read-modify-write operation.
10	OERIS	RO	0	UART Overrun Error Raw Interrupt Status Gives the raw interrupt state (prior to masking) of this interrupt.
9	BERIS	RO	0	UART Break Error Raw Interrupt Status Gives the raw interrupt state (prior to masking) of this interrupt.
8	PERIS	RO	0	UART Parity Error Raw Interrupt Status Gives the raw interrupt state (prior to masking) of this interrupt.
7	FERIS	RO	0	UART Framing Error Raw Interrupt Status Gives the raw interrupt state (prior to masking) of this interrupt.
6	RTRIS	RO	0	UART Receive Time-Out Raw Interrupt Status Gives the raw interrupt state (prior to masking) of this interrupt.
5	TXRIS	RO	0	UART Transmit Raw Interrupt Status Gives the raw interrupt state (prior to masking) of this interrupt.
4	RXRIS	RO	0	UART Receive Raw Interrupt Status Gives the raw interrupt state (prior to masking) of this interrupt.
3:0	reserved	RO	0xF	Software should not rely on the value of a reserved bit. To provide compatibility with future products, the value of a reserved bit should be preserved across a read-modify-write operation.

Register 12: UART Masked Interrupt Status (UARTMIS), offset 0x040

The **UARTMIS** register is the masked interrupt status register. On a read, this register gives the current masked status value of the corresponding interrupt. A write has no effect.

UART Masked Interrupt Status (UARTMIS)

UART0 base: 0x4000.C000
UART1 base: 0x4000.D000
Offset 0x040
Type RO, reset 0x0000.0000

	31	30	29	28	27	26	25	24	23	22	21	20	19	18	17	16
	reserved															
Type	RO	RO	RO	RO	RO	RO	RO	RO	RO	RO	RO	RO	RO	RO	RO	RO
Reset	0	0	0	0	0	0	0	0	0	0	0	0	0	0	0	0

	15	14	13	12	11	10	9	8	7	6	5	4	3	2	1	0
	reserved					OEMIS	BEMIS	PEMIS	FEMIS	RTMIS	TXMIS	RXMIS	reserved			
Type	RO	RO	RO	RO	RO	RO	RO	RO	RO	RO	RO	RO	RO	RO	RO	RO
Reset	0	0	0	0	0	0	0	0	0	0	0	0	0	0	0	0

Bit/Field	Name	Type	Reset	Description
31:11	reserved	RO	0x00	Software should not rely on the value of a reserved bit. To provide compatibility with future products, the value of a reserved bit should be preserved across a read-modify-write operation.
10	OEMIS	RO	0	UART Overrun Error Masked Interrupt Status Gives the masked interrupt state of this interrupt.
9	BEMIS	RO	0	UART Break Error Masked Interrupt Status Gives the masked interrupt state of this interrupt.
8	PEMIS	RO	0	UART Parity Error Masked Interrupt Status Gives the masked interrupt state of this interrupt.
7	FEMIS	RO	0	UART Framing Error Masked Interrupt Status Gives the masked interrupt state of this interrupt.
6	RTMIS	RO	0	UART Receive Time-Out Masked Interrupt Status Gives the masked interrupt state of this interrupt.
5	TXMIS	RO	0	UART Transmit Masked Interrupt Status Gives the masked interrupt state of this interrupt.
4	RXMIS	RO	0	UART Receive Masked Interrupt Status Gives the masked interrupt state of this interrupt.
3:0	reserved	RO	0	Software should not rely on the value of a reserved bit. To provide compatibility with future products, the value of a reserved bit should be preserved across a read-modify-write operation.

Register 13: UART Interrupt Clear (UARTICR), offset 0x044

The **UARTICR** register is the interrupt clear register. On a write of 1, the corresponding interrupt (both raw interrupt and masked interrupt, if enabled) is cleared. A write of 0 has no effect.

UART Interrupt Clear (UARTICR)

UART0 base: 0x4000.C000
UART1 base: 0x4000.D000
Offset 0x044
Type W1C, reset 0x0000.0000

	31	30	29	28	27	26	25	24	23	22	21	20	19	18	17	16
	reserved															
Type	RO	RO	RO	RO	RO	RO	RO	RO	RO	RO	RO	RO	RO	RO	RO	RO
Reset	0	0	0	0	0	0	0	0	0	0	0	0	0	0	0	0

	15	14	13	12	11	10	9	8	7	6	5	4	3	2	1	0
	reserved					OEIC	BEIC	PEIC	FEIC	RTIC	TXIC	RXIC	reserved			
Type	RO	RO	RO	RO	RO	W1C	W1C	W1C	W1C	W1C	W1C	W1C	RO	RO	RO	RO
Reset	0	0	0	0	0	0	0	0	0	0	0	0	0	0	0	0

Bit/Field	Name	Type	Reset	Description
31:11	reserved	RO	0x00	Software should not rely on the value of a reserved bit. To provide compatibility with future products, the value of a reserved bit should be preserved across a read-modify-write operation.
10	OEIC	W1C	0	Overrun Error Interrupt Clear The `OEIC` values are defined as follows: Value Description 0 No effect on the interrupt. 1 Clears interrupt.
9	BEIC	W1C	0	Break Error Interrupt Clear The `BEIC` values are defined as follows: Value Description 0 No effect on the interrupt. 1 Clears interrupt.
8	PEIC	W1C	0	Parity Error Interrupt Clear The `PEIC` values are defined as follows: Value Description 0 No effect on the interrupt. 1 Clears interrupt.

Bit/Field	Name	Type	Reset	Description
7	FEIC	W1C	0	Framing Error Interrupt Clear The `FEIC` values are defined as follows: Value Description 0 No effect on the interrupt. 1 Clears interrupt.
6	RTIC	W1C	0	Receive Time-Out Interrupt Clear The `RTIC` values are defined as follows: Value Description 0 No effect on the interrupt. 1 Clears interrupt.
5	TXIC	W1C	0	Transmit Interrupt Clear The `TXIC` values are defined as follows: Value Description 0 No effect on the interrupt. 1 Clears interrupt.
4	RXIC	W1C	0	Receive Interrupt Clear The `RXIC` values are defined as follows: Value Description 0 No effect on the interrupt. 1 Clears interrupt.
3:0	reserved	RO	0x00	Software should not rely on the value of a reserved bit. To provide compatibility with future products, the value of a reserved bit should be preserved across a read-modify-write operation.

Register 14: UART Peripheral Identification 4 (UARTPeriphID4), offset 0xFD0

The **UARTPeriphIDn** registers are hard-coded and the fields within the registers determine the reset values.

UART Peripheral Identification 4 (UARTPeriphID4)

UART0 base: 0x4000.C000
UART1 base: 0x4000.D000
Offset 0xFD0
Type RO, reset 0x0000.0000

	31	30	29	28	27	26	25	24	23	22	21	20	19	18	17	16
	reserved															
Type	RO	RO	RO	RO	RO	RO	RO	RO	RO	RO	RO	RO	RO	RO	RO	RO
Reset	0	0	0	0	0	0	0	0	0	0	0	0	0	0	0	0

	15	14	13	12	11	10	9	8	7	6	5	4	3	2	1	0
	reserved								PID4							
Type	RO	RO	RO	RO	RO	RO	RO	RO	RO	RO	RO	RO	RO	RO	RO	RO
Reset	0	0	0	0	0	0	0	0	0	0	0	0	0	0	0	0

Bit/Field	Name	Type	Reset	Description
31:8	reserved	RO	0x00	Software should not rely on the value of a reserved bit. To provide compatibility with future products, the value of a reserved bit should be preserved across a read-modify-write operation.
7:0	PID4	RO	0x0000	UART Peripheral ID Register[7:0] Can be used by software to identify the presence of this peripheral.

Register 15: UART Peripheral Identification 5 (UARTPeriphID5), offset 0xFD4

The **UARTPeriphIDn** registers are hard-coded and the fields within the registers determine the reset values.

UART Peripheral Identification 5 (UARTPeriphID5)

UART0 base: 0x4000.C000
UART1 base: 0x4000.D000
Offset 0xFD4
Type RO, reset 0x0000.0000

	31	30	29	28	27	26	25	24	23	22	21	20	19	18	17	16
	reserved															
Type	RO	RO	RO	RO	RO	RO	RO	RO	RO	RO	RO	RO	RO	RO	RO	RO
Reset	0	0	0	0	0	0	0	0	0	0	0	0	0	0	0	0

	15	14	13	12	11	10	9	8	7	6	5	4	3	2	1	0
	reserved								PID5							
Type	RO	RO	RO	RO	RO	RO	RO	RO	RO	RO	RO	RO	RO	RO	RO	RO
Reset	0	0	0	0	0	0	0	0	0	0	0	0	0	0	0	0

Bit/Field	Name	Type	Reset	Description
31:8	reserved	RO	0x00	Software should not rely on the value of a reserved bit. To provide compatibility with future products, the value of a reserved bit should be preserved across a read-modify-write operation.
7:0	PID5	RO	0x0000	UART Peripheral ID Register[15:8] Can be used by software to identify the presence of this peripheral.

Register 16: UART Peripheral Identification 6 (UARTPeriphID6), offset 0xFD8

The **UARTPeriphIDn** registers are hard-coded and the fields within the registers determine the reset values.

UART Peripheral Identification 6 (UARTPeriphID6)

UART0 base: 0x4000.C000
UART1 base: 0x4000.D000
Offset 0xFD8
Type RO, reset 0x0000.0000

	31	30	29	28	27	26	25	24	23	22	21	20	19	18	17	16
	reserved															
Type	RO	RO	RO	RO	RO	RO	RO	RO	RO	RO	RO	RO	RO	RO	RO	RO
Reset	0	0	0	0	0	0	0	0	0	0	0	0	0	0	0	0

	15	14	13	12	11	10	9	8	7	6	5	4	3	2	1	0
	reserved								PID6							
Type	RO	RO	RO	RO	RO	RO	RO	RO	RO	RO	RO	RO	RO	RO	RO	RO
Reset	0	0	0	0	0	0	0	0	0	0	0	0	0	0	0	0

Bit/Field	Name	Type	Reset	Description
31:8	reserved	RO	0x00	Software should not rely on the value of a reserved bit. To provide compatibility with future products, the value of a reserved bit should be preserved across a read-modify-write operation.
7:0	PID6	RO	0x0000	UART Peripheral ID Register[23:16] Can be used by software to identify the presence of this peripheral.

Register 17: UART Peripheral Identification 7 (UARTPeriphID7), offset 0xFDC

The **UARTPeriphIDn** registers are hard-coded and the fields within the registers determine the reset values.

UART Peripheral Identification 7 (UARTPeriphID7)

UART0 base: 0x4000.C000
UART1 base: 0x4000.D000
Offset 0xFDC
Type RO, reset 0x0000.0000

	31	30	29	28	27	26	25	24	23	22	21	20	19	18	17	16
	reserved															
Type	RO	RO	RO	RO	RO	RO	RO	RO	RO	RO	RO	RO	RO	RO	RO	RO
Reset	0	0	0	0	0	0	0	0	0	0	0	0	0	0	0	0

	15	14	13	12	11	10	9	8	7	6	5	4	3	2	1	0
	reserved								PID7							
Type	RO	RO	RO	RO	RO	RO	RO	RO	RO	RO	RO	RO	RO	RO	RO	RO
Reset	0	0	0	0	0	0	0	0	0	0	0	0	0	0	0	0

Bit/Field	Name	Type	Reset	Description
31:8	reserved	RO	0	Software should not rely on the value of a reserved bit. To provide compatibility with future products, the value of a reserved bit should be preserved across a read-modify-write operation.
7:0	PID7	RO	0x0000	UART Peripheral ID Register[31:24] Can be used by software to identify the presence of this peripheral.

Register 18: UART Peripheral Identification 0 (UARTPeriphID0), offset 0xFE0

The **UARTPeriphIDn** registers are hard-coded and the fields within the registers determine the reset values.

UART Peripheral Identification 0 (UARTPeriphID0)

UART0 base: 0x4000.C000
UART1 base: 0x4000.D000
Offset 0xFE0
Type RO, reset 0x0000.0011

	31	30	29	28	27	26	25	24	23	22	21	20	19	18	17	16
	reserved															
Type	RO	RO	RO	RO	RO	RO	RO	RO	RO	RO	RO	RO	RO	RO	RO	RO
Reset	0	0	0	0	0	0	0	0	0	0	0	0	0	0	0	0

	15	14	13	12	11	10	9	8	7	6	5	4	3	2	1	0
	reserved								PID0							
Type	RO	RO	RO	RO	RO	RO	RO	RO	RO	RO	RO	RO	RO	RO	RO	RO
Reset	0	0	0	0	0	0	0	0	0	0	0	1	0	0	0	1

Bit/Field	Name	Type	Reset	Description
31:8	reserved	RO	0x00	Software should not rely on the value of a reserved bit. To provide compatibility with future products, the value of a reserved bit should be preserved across a read-modify-write operation.
7:0	PID0	RO	0x11	UART Peripheral ID Register[7:0] Can be used by software to identify the presence of this peripheral.

Register 19: UART Peripheral Identification 1 (UARTPeriphID1), offset 0xFE4

The **UARTPeriphIDn** registers are hard-coded and the fields within the registers determine the reset values.

UART Peripheral Identification 1 (UARTPeriphID1)

UART0 base: 0x4000.C000
UART1 base: 0x4000.D000
Offset 0xFE4
Type RO, reset 0x0000.0000

	31	30	29	28	27	26	25	24	23	22	21	20	19	18	17	16
	reserved															
Type	RO	RO	RO	RO	RO	RO	RO	RO	RO	RO	RO	RO	RO	RO	RO	RO
Reset	0	0	0	0	0	0	0	0	0	0	0	0	0	0	0	0

	15	14	13	12	11	10	9	8	7	6	5	4	3	2	1	0
	reserved								PID1							
Type	RO	RO	RO	RO	RO	RO	RO	RO	RO	RO	RO	RO	RO	RO	RO	RO
Reset	0	0	0	0	0	0	0	0	0	0	0	0	0	0	0	0

Bit/Field	Name	Type	Reset	Description
31:8	reserved	RO	0x00	Software should not rely on the value of a reserved bit. To provide compatibility with future products, the value of a reserved bit should be preserved across a read-modify-write operation.
7:0	PID1	RO	0x00	UART Peripheral ID Register[15:8] Can be used by software to identify the presence of this peripheral.

Register 20: UART Peripheral Identification 2 (UARTPeriphID2), offset 0xFE8

The **UARTPeriphIDn** registers are hard-coded and the fields within the registers determine the reset values.

UART Peripheral Identification 2 (UARTPeriphID2)

UART0 base: 0x4000.C000
UART1 base: 0x4000.D000
Offset 0xFE8
Type RO, reset 0x0000.0018

	31	30	29	28	27	26	25	24	23	22	21	20	19	18	17	16
	reserved															
Type	RO	RO	RO	RO	RO	RO	RO	RO	RO	RO	RO	RO	RO	RO	RO	RO
Reset	0	0	0	0	0	0	0	0	0	0	0	0	0	0	0	0

	15	14	13	12	11	10	9	8	7	6	5	4	3	2	1	0
	reserved								PID2							
Type	RO	RO	RO	RO	RO	RO	RO	RO	RO	RO	RO	RO	RO	RO	RO	RO
Reset	0	0	0	0	0	0	0	0	0	0	0	1	1	0	0	0

Bit/Field	Name	Type	Reset	Description
31:8	reserved	RO	0x00	Software should not rely on the value of a reserved bit. To provide compatibility with future products, the value of a reserved bit should be preserved across a read-modify-write operation.
7:0	PID2	RO	0x18	UART Peripheral ID Register[23:16] Can be used by software to identify the presence of this peripheral.

Register 21: UART Peripheral Identification 3 (UARTPeriphID3), offset 0xFEC

The **UARTPeriphIDn** registers are hard-coded and the fields within the registers determine the reset values.

UART Peripheral Identification 3 (UARTPeriphID3)

UART0 base: 0x4000.C000
UART1 base: 0x4000.D000
Offset 0xFEC
Type RO, reset 0x0000.0001

	31	30	29	28	27	26	25	24	23	22	21	20	19	18	17	16
	reserved															
Type	RO	RO	RO	RO	RO	RO	RO	RO	RO	RO	RO	RO	RO	RO	RO	RO
Reset	0	0	0	0	0	0	0	0	0	0	0	0	0	0	0	0

	15	14	13	12	11	10	9	8	7	6	5	4	3	2	1	0
	reserved								PID3							
Type	RO	RO	RO	RO	RO	RO	RO	RO	RO	RO	RO	RO	RO	RO	RO	RO
Reset	0	0	0	0	0	0	0	0	0	0	0	0	0	0	0	1

Bit/Field	Name	Type	Reset	Description
31:8	reserved	RO	0x00	Software should not rely on the value of a reserved bit. To provide compatibility with future products, the value of a reserved bit should be preserved across a read-modify-write operation.
7:0	PID3	RO	0x01	UART Peripheral ID Register[31:24] Can be used by software to identify the presence of this peripheral.

Register 22: UART PrimeCell Identification 0 (UARTPCellID0), offset 0xFF0

The **UARTPCellIDn** registers are hard-coded and the fields within the registers determine the reset values.

UART PrimeCell Identification 0 (UARTPCellID0)

UART0 base: 0x4000.C000
UART1 base: 0x4000.D000
Offset 0xFF0
Type RO, reset 0x0000.000D

	31	30	29	28	27	26	25	24	23	22	21	20	19	18	17	16
	reserved															
Type	RO	RO	RO	RO	RO	RO	RO	RO	RO	RO	RO	RO	RO	RO	RO	RO
Reset	0	0	0	0	0	0	0	0	0	0	0	0	0	0	0	0

	15	14	13	12	11	10	9	8	7	6	5	4	3	2	1	0
	reserved								CID0							
Type	RO	RO	RO	RO	RO	RO	RO	RO	RO	RO	RO	RO	RO	RO	RO	RO
Reset	0	0	0	0	0	0	0	0	0	0	0	0	1	1	0	1

Bit/Field	Name	Type	Reset	Description
31:8	reserved	RO	0x00	Software should not rely on the value of a reserved bit. To provide compatibility with future products, the value of a reserved bit should be preserved across a read-modify-write operation.
7:0	CID0	RO	0x0D	UART PrimeCell ID Register[7:0] Provides software a standard cross-peripheral identification system.

Register 23: UART PrimeCell Identification 1 (UARTPCellID1), offset 0xFF4

The **UARTPCellIDn** registers are hard-coded and the fields within the registers determine the reset values.

UART PrimeCell Identification 1 (UARTPCellID1)

UART0 base: 0x4000.C000
UART1 base: 0x4000.D000
Offset 0xFF4
Type RO, reset 0x0000.00F0

	31	30	29	28	27	26	25	24	23	22	21	20	19	18	17	16
	reserved															
Type	RO	RO	RO	RO	RO	RO	RO	RO	RO	RO	RO	RO	RO	RO	RO	RO
Reset	0	0	0	0	0	0	0	0	0	0	0	0	0	0	0	0

	15	14	13	12	11	10	9	8	7	6	5	4	3	2	1	0
	reserved								CID1							
Type	RO	RO	RO	RO	RO	RO	RO	RO	RO	RO	RO	RO	RO	RO	RO	RO
Reset	0	0	0	0	0	0	0	0	1	1	1	1	0	0	0	0

Bit/Field	Name	Type	Reset	Description
31:8	reserved	RO	0x00	Software should not rely on the value of a reserved bit. To provide compatibility with future products, the value of a reserved bit should be preserved across a read-modify-write operation.
7:0	CID1	RO	0xF0	UART PrimeCell ID Register[15:8] Provides software a standard cross-peripheral identification system.

Register 24: UART PrimeCell Identification 2 (UARTPCellID2), offset 0xFF8

The **UARTPCellIDn** registers are hard-coded and the fields within the registers determine the reset values.

UART PrimeCell Identification 2 (UARTPCellID2)

UART0 base: 0x4000.C000
UART1 base: 0x4000.D000
Offset 0xFF8
Type RO, reset 0x0000.0005

	31	30	29	28	27	26	25	24	23	22	21	20	19	18	17	16
	reserved															
Type	RO	RO	RO	RO	RO	RO	RO	RO	RO	RO	RO	RO	RO	RO	RO	RO
Reset	0	0	0	0	0	0	0	0	0	0	0	0	0	0	0	0

	15	14	13	12	11	10	9	8	7	6	5	4	3	2	1	0
	reserved								CID2							
Type	RO	RO	RO	RO	RO	RO	RO	RO	RO	RO	RO	RO	RO	RO	RO	RO
Reset	0	0	0	0	0	0	0	0	0	0	0	0	0	1	0	1

Bit/Field	Name	Type	Reset	Description
31:8	reserved	RO	0x00	Software should not rely on the value of a reserved bit. To provide compatibility with future products, the value of a reserved bit should be preserved across a read-modify-write operation.
7:0	CID2	RO	0x05	UART PrimeCell ID Register[23:16] Provides software a standard cross-peripheral identification system.

Register 25: UART PrimeCell Identification 3 (UARTPCellID3), offset 0xFFC

The **UARTPCellIDn** registers are hard-coded and the fields within the registers determine the reset values.

UART PrimeCell Identification 3 (UARTPCellID3)

UART0 base: 0x4000.C000
UART1 base: 0x4000.D000
Offset 0xFFC
Type RO, reset 0x0000.00B1

	31	30	29	28	27	26	25	24	23	22	21	20	19	18	17	16
	reserved															
Type	RO	RO	RO	RO	RO	RO	RO	RO	RO	RO	RO	RO	RO	RO	RO	RO
Reset	0	0	0	0	0	0	0	0	0	0	0	0	0	0	0	0

	15	14	13	12	11	10	9	8	7	6	5	4	3	2	1	0
	reserved								CID3							
Type	RO	RO	RO	RO	RO	RO	RO	RO	RO	RO	RO	RO	RO	RO	RO	RO
Reset	0	0	0	0	0	0	0	0	1	0	1	1	0	0	0	1

Bit/Field	Name	Type	Reset	Description
31:8	reserved	RO	0x00	Software should not rely on the value of a reserved bit. To provide compatibility with future products, the value of a reserved bit should be preserved across a read-modify-write operation.
7:0	CID3	RO	0xB1	UART PrimeCell ID Register[31:24] Provides software a standard cross-peripheral identification system.

14 Synchronous Serial Interface (SSI)

The Stellaris® Synchronous Serial Interface (SSI) is a master or slave interface for synchronous serial communication with peripheral devices that have either Freescale SPI, MICROWIRE, or Texas Instruments synchronous serial interfaces.

The Stellaris® SSI module has the following features:

- Master or slave operation
- Programmable clock bit rate and prescale
- Separate transmit and receive FIFOs, 16 bits wide, 8 locations deep
- Programmable interface operation for Freescale SPI, MICROWIRE, or Texas Instruments synchronous serial interfaces
- Programmable data frame size from 4 to 16 bits
- Internal loopback test mode for diagnostic/debug testing

14.1 Block Diagram

Figure 14-1. SSI Module Block Diagram

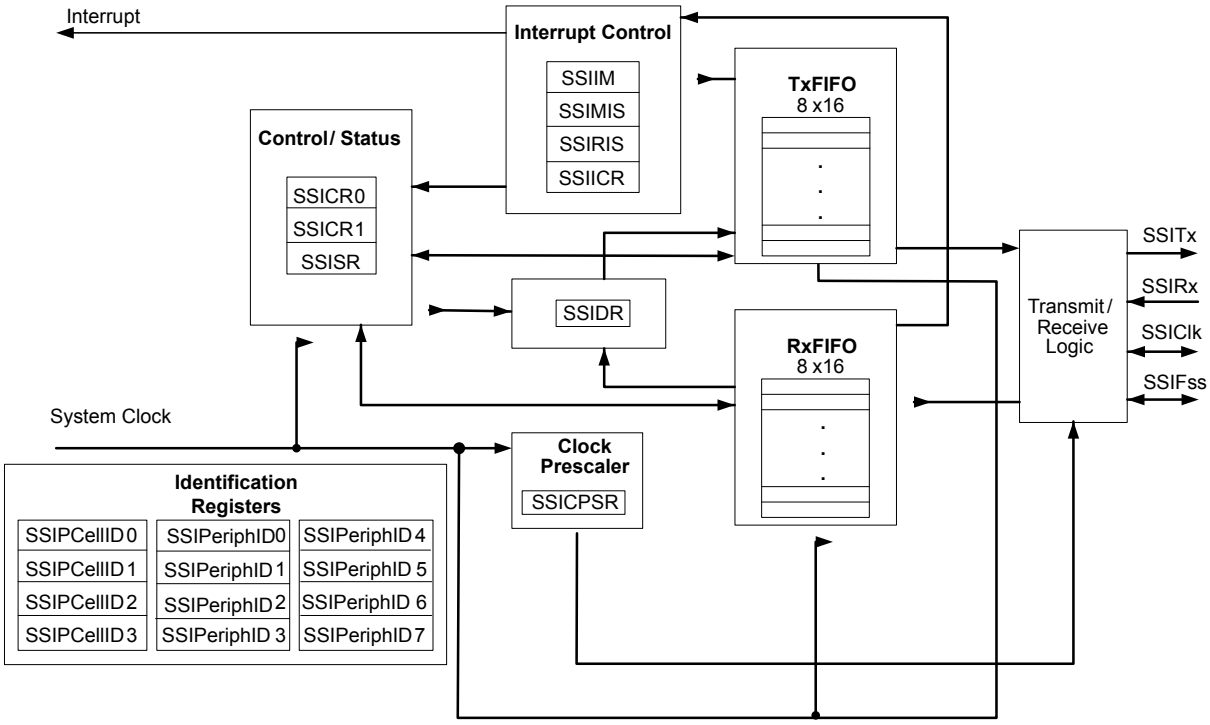

14.2 Functional Description

The SSI performs serial-to-parallel conversion on data received from a peripheral device. The CPU accesses data, control, and status information. The transmit and receive paths are buffered with

internal FIFO memories allowing up to eight 16-bit values to be stored independently in both transmit and receive modes.

14.2.1 Bit Rate Generation

The SSI includes a programmable bit rate clock divider and prescaler to generate the serial output clock. Bit rates are supported to 2 MHz and higher, although maximum bit rate is determined by peripheral devices.

The serial bit rate is derived by dividing down the input clock (FSysClk). The clock is first divided by an even prescale value `CPSDVSR` from 2 to 254, which is programmed in the **SSI Clock Prescale (SSICPSR)** register (see page 378). The clock is further divided by a value from 1 to 256, which is 1 + *SCR*, where *SCR* is the value programmed in the **SSI Control0 (SSICR0)** register (see page 371).

The frequency of the output clock `SSIClk` is defined by:

```
SSIClk = FSysClk / (CPSDVSR * (1 + SCR))
```

Note: Although the `SSIClk` transmit clock can theoretically be 25 MHz, the module may not be able to operate at that speed. For master mode, the system clock must be at least two times faster than the `SSIClk`. For slave mode, the system clock must be at least 12 times faster than the `SSIClk`.

See “Synchronous Serial Interface (SSI)” on page 631 to view SSI timing parameters.

14.2.2 FIFO Operation

14.2.2.1 Transmit FIFO

The common transmit FIFO is a 16-bit wide, 8-locations deep, first-in, first-out memory buffer. The CPU writes data to the FIFO by writing the **SSI Data (SSIDR)** register (see page 375), and data is stored in the FIFO until it is read out by the transmission logic.

When configured as a master or a slave, parallel data is written into the transmit FIFO prior to serial conversion and transmission to the attached slave or master, respectively, through the `SSITx` pin.

In slave mode, the SSI transmits data each time it receives data from the master. It is possible that the slave may be required to transmit when the transmit FIFO has no valid data. In this situation, whatever data in the FIFO that the TX FIFO pointer points to is transmitted even though it is not valid. The TX FIFO pointer is not incremented and upon request, the same invalid data is transferred unless valid data has been written to the FIFO.

14.2.2.2 Receive FIFO

The common receive FIFO is a 16-bit wide, 8-locations deep, first-in, first-out memory buffer. Received data from the serial interface is stored in the buffer until read out by the CPU, which accesses the read FIFO by reading the **SSIDR** register.

When configured as a master or slave, serial data received through the `SSIRx` pin is registered prior to parallel loading into the attached slave or master receive FIFO, respectively.

14.2.3 Interrupts

The SSI can generate interrupts when the following conditions are observed:

- Transmit FIFO service
- Receive FIFO service

- Receive FIFO time-out
- Receive FIFO overrun

All of the interrupt events are ORed together before being sent to the interrupt controller, so the SSI can only generate a single interrupt request to the controller at any given time. You can mask each of the four individual maskable interrupts by setting the appropriate bits in the **SSI Interrupt Mask (SSIIM)** register (see page 379). Setting the appropriate mask bit to 1 enables the interrupt.

Provision of the individual outputs, as well as a combined interrupt output, allows use of either a global interrupt service routine, or modular device drivers to handle interrupts. The transmit and receive dynamic dataflow interrupts have been separated from the status interrupts so that data can be read or written in response to the FIFO trigger levels. The status of the individual interrupt sources can be read from the **SSI Raw Interrupt Status (SSIRIS)** and **SSI Masked Interrupt Status (SSIMIS)** registers (see page 381 and page 382, respectively).

14.2.4 Frame Formats

Each data frame is between 4 and 16 bits long, depending on the size of data programmed, and is transmitted starting with the MSB. There are three basic frame types that can be selected:

- Texas Instruments synchronous serial
- Freescale SPI
- MICROWIRE

For all three formats, the serial clock (`SSIClk`) is held inactive while the SSI is idle, and `SSIClk` transitions at the programmed frequency only during active transmission or reception of data. The idle state of `SSIClk` is utilized to provide a receive timeout indication that occurs when the receive FIFO still contains data after a timeout period.

For Freescale SPI and MICROWIRE frame formats, the serial frame (`SSIFss`) pin is active Low, and is asserted (pulled down) during the entire transmission of the frame.

For Texas Instruments synchronous serial frame format, the `SSIFss` pin is pulsed for one serial clock period starting at its rising edge, prior to the transmission of each frame. For this frame format, both the SSI and the off-chip slave device drive their output data on the rising edge of `SSIClk`, and latch data from the other device on the falling edge.

Unlike the full-duplex transmission of the other two frame formats, the MICROWIRE format uses a special master-slave messaging technique, which operates at half-duplex. In this mode, when a frame begins, an 8-bit control message is transmitted to the off-chip slave. During this transmit, no incoming data is received by the SSI. After the message has been sent, the off-chip slave decodes it and, after waiting one serial clock after the last bit of the 8-bit control message has been sent, responds with the requested data. The returned data can be 4 to 16 bits in length, making the total frame length anywhere from 13 to 25 bits.

14.2.4.1 Texas Instruments Synchronous Serial Frame Format

Figure 14-2 on page 362 shows the Texas Instruments synchronous serial frame format for a single transmitted frame.

Figure 14-2. TI Synchronous Serial Frame Format (Single Transfer)

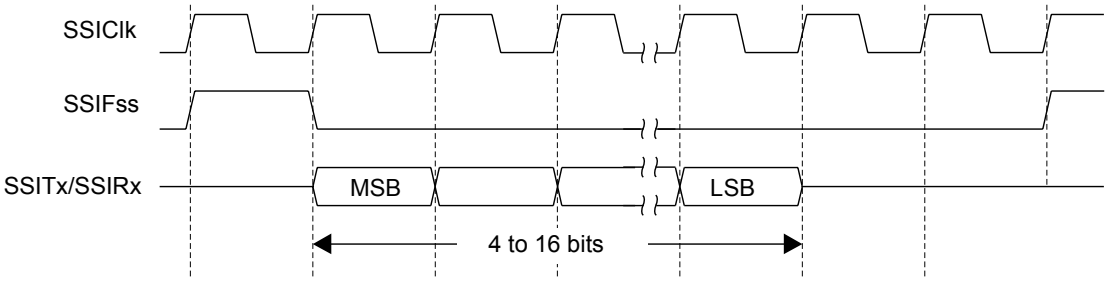

In this mode, SSIClk and SSIFss are forced Low, and the transmit data line SSITx is tristated whenever the SSI is idle. Once the bottom entry of the transmit FIFO contains data, SSIFss is pulsed High for one SSIClk period. The value to be transmitted is also transferred from the transmit FIFO to the serial shift register of the transmit logic. On the next rising edge of SSIClk, the MSB of the 4 to 16-bit data frame is shifted out on the SSITx pin. Likewise, the MSB of the received data is shifted onto the SSIRx pin by the off-chip serial slave device.

Both the SSI and the off-chip serial slave device then clock each data bit into their serial shifter on the falling edge of each SSIClk. The received data is transferred from the serial shifter to the receive FIFO on the first rising edge of SSIClk after the LSB has been latched.

Figure 14-3 on page 362 shows the Texas Instruments synchronous serial frame format when back-to-back frames are transmitted.

Figure 14-3. TI Synchronous Serial Frame Format (Continuous Transfer)

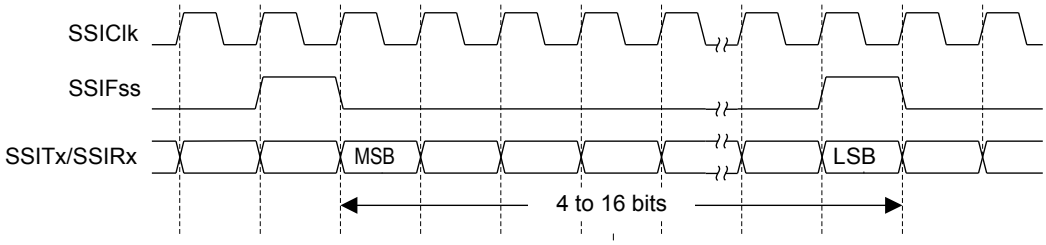

14.2.4.2 Freescale SPI Frame Format

The Freescale SPI interface is a four-wire interface where the SSIFss signal behaves as a slave select. The main feature of the Freescale SPI format is that the inactive state and phase of the SSIClk signal are programmable through the SPO and SPH bits within the **SSISCR0** control register.

SPO Clock Polarity Bit

When the SPO clock polarity control bit is Low, it produces a steady state Low value on the SSIClk pin. If the SPO bit is High, a steady state High value is placed on the SSIClk pin when data is not being transferred.

SPH Phase Control Bit

The SPH phase control bit selects the clock edge that captures data and allows it to change state. It has the most impact on the first bit transmitted by either allowing or not allowing a clock transition before the first data capture edge. When the SPH phase control bit is Low, data is captured on the first clock edge transition. If the SPH bit is High, data is captured on the second clock edge transition.

14.2.4.3 Freescale SPI Frame Format with SPO=0 and SPH=0

Single and continuous transmission signal sequences for Freescale SPI format with SPO=0 and SPH=0 are shown in Figure 14-4 on page 363 and Figure 14-5 on page 363.

Figure 14-4. Freescale SPI Format (Single Transfer) with SPO=0 and SPH=0

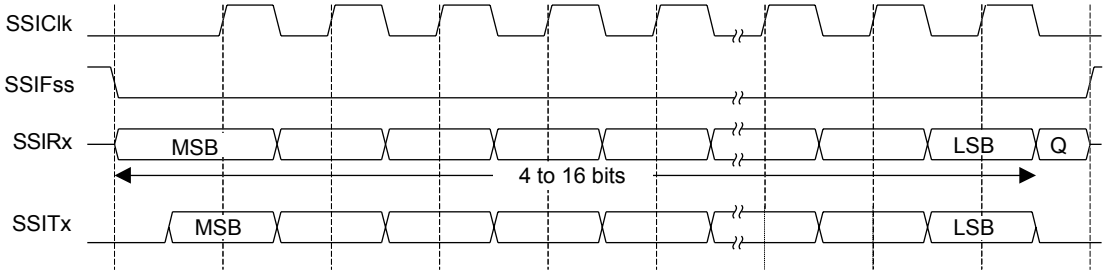

Note: Q is undefined.

Figure 14-5. Freescale SPI Format (Continuous Transfer) with SPO=0 and SPH=0

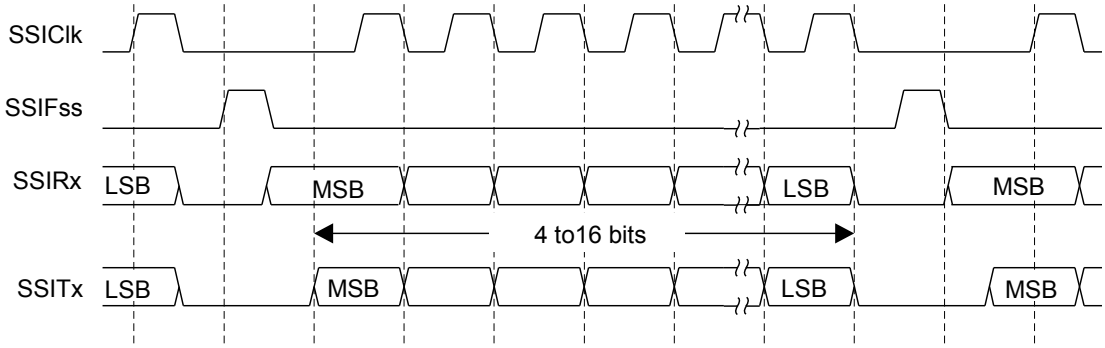

In this configuration, during idle periods:

- `SSIClk` is forced Low
- `SSIFss` is forced High
- The transmit data line `SSITx` is arbitrarily forced Low
- When the SSI is configured as a master, it enables the `SSIClk` pad
- When the SSI is configured as a slave, it disables the `SSIClk` pad

If the SSI is enabled and there is valid data within the transmit FIFO, the start of transmission is signified by the `SSIFss` master signal being driven Low. This causes slave data to be enabled onto the `SSIRx` input line of the master. The master `SSITx` output pad is enabled.

One half SSIClk period later, valid master data is transferred to the SSITx pin. Now that both the master and slave data have been set, the SSIClk master clock pin goes High after one further half SSIClk period.

The data is now captured on the rising and propagated on the falling edges of the SSIClk signal.

In the case of a single word transmission, after all bits of the data word have been transferred, the SSIFss line is returned to its idle High state one SSIClk period after the last bit has been captured.

However, in the case of continuous back-to-back transmissions, the SSIFss signal must be pulsed High between each data word transfer. This is because the slave select pin freezes the data in its serial peripheral register and does not allow it to be altered if the SPH bit is logic zero. Therefore, the master device must raise the SSIFss pin of the slave device between each data transfer to enable the serial peripheral data write. On completion of the continuous transfer, the SSIFss pin is returned to its idle state one SSIClk period after the last bit has been captured.

14.2.4.4 Freescale SPI Frame Format with SPO=0 and SPH=1

The transfer signal sequence for Freescale SPI format with SPO=0 and SPH=1 is shown in Figure 14-6 on page 364, which covers both single and continuous transfers.

Figure 14-6. Freescale SPI Frame Format with SPO=0 and SPH=1

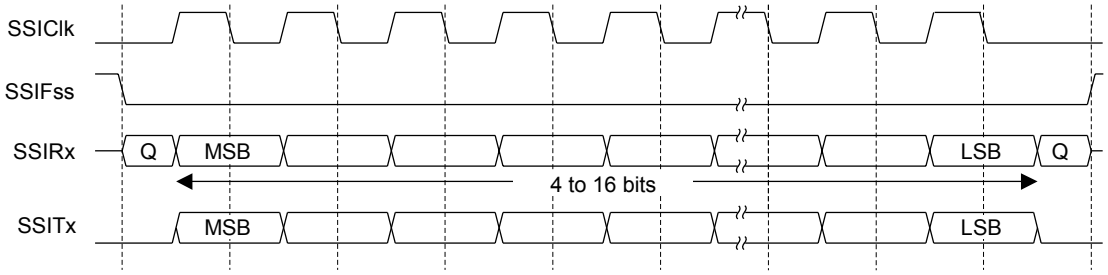

Note: Q is undefined.

In this configuration, during idle periods:

- SSIClk is forced Low
- SSIFss is forced High
- The transmit data line SSITx is arbitrarily forced Low
- When the SSI is configured as a master, it enables the SSIClk pad
- When the SSI is configured as a slave, it disables the SSIClk pad

If the SSI is enabled and there is valid data within the transmit FIFO, the start of transmission is signified by the SSIFss master signal being driven Low. The master SSITx output is enabled. After a further one half SSIClk period, both master and slave valid data is enabled onto their respective transmission lines. At the same time, the SSIClk is enabled with a rising edge transition.

Data is then captured on the falling edges and propagated on the rising edges of the SSIClk signal.

In the case of a single word transfer, after all bits have been transferred, the SSIFss line is returned to its idle High state one SSIClk period after the last bit has been captured.

For continuous back-to-back transfers, the SSIFss pin is held Low between successive data words and termination is the same as that of the single word transfer.

14.2.4.5 Freescale SPI Frame Format with SPO=1 and SPH=0

Single and continuous transmission signal sequences for Freescale SPI format with SPO=1 and SPH=0 are shown in Figure 14-7 on page 365 and Figure 14-8 on page 365.

Figure 14-7. Freescale SPI Frame Format (Single Transfer) with SPO=1 and SPH=0

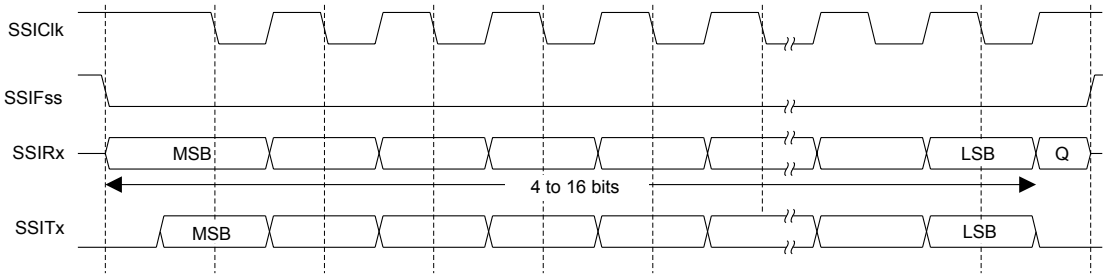

Note: Q is undefined.

Figure 14-8. Freescale SPI Frame Format (Continuous Transfer) with SPO=1 and SPH=0

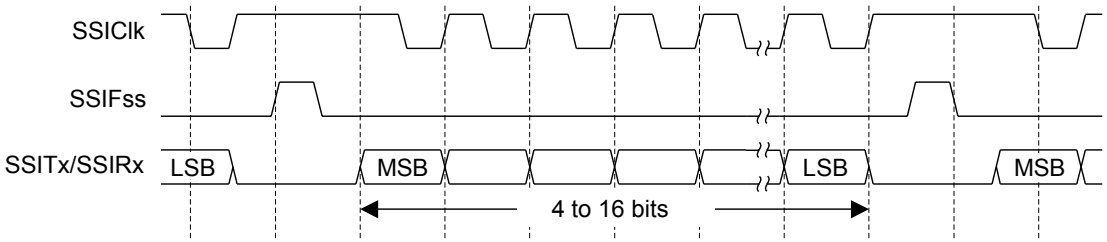

In this configuration, during idle periods:

- SSIClk is forced High
- SSIFss is forced High
- The transmit data line SSITx is arbitrarily forced Low
- When the SSI is configured as a master, it enables the SSIClk pad
- When the SSI is configured as a slave, it disables the SSIClk pad

If the SSI is enabled and there is valid data within the transmit FIFO, the start of transmission is signified by the SSIFss master signal being driven Low, which causes slave data to be immediately transferred onto the SSIRx line of the master. The master SSITx output pad is enabled.

One half period later, valid master data is transferred to the SSITx line. Now that both the master and slave data have been set, the SSIClk master clock pin becomes Low after one further half SSIClk period. This means that data is captured on the falling edges and propagated on the rising edges of the SSIClk signal.

In the case of a single word transmission, after all bits of the data word are transferred, the SSIFss line is returned to its idle High state one SSIClk period after the last bit has been captured.

However, in the case of continuous back-to-back transmissions, the SSIFss signal must be pulsed High between each data word transfer. This is because the slave select pin freezes the data in its serial peripheral register and does not allow it to be altered if the SPH bit is logic zero. Therefore, the master device must raise the SSIFss pin of the slave device between each data transfer to enable the serial peripheral data write. On completion of the continuous transfer, the SSIFss pin is returned to its idle state one SSIClk period after the last bit has been captured.

14.2.4.6 Freescale SPI Frame Format with SPO=1 and SPH=1

The transfer signal sequence for Freescale SPI format with SPO=1 and SPH=1 is shown in Figure 14-9 on page 366, which covers both single and continuous transfers.

Figure 14-9. Freescale SPI Frame Format with SPO=1 and SPH=1

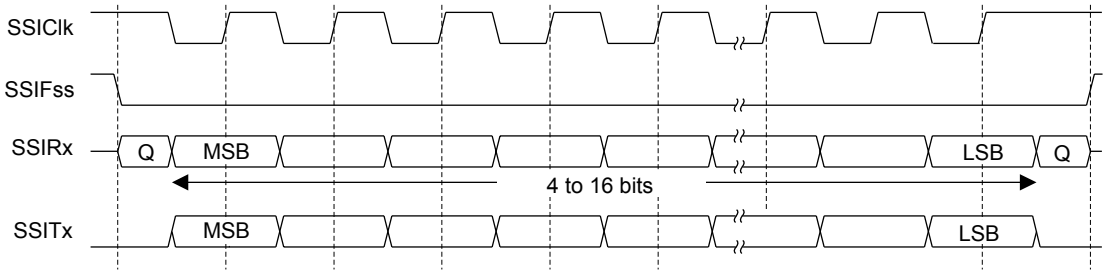

Note: Q is undefined.

In this configuration, during idle periods:

- SSIClk is forced High
- SSIFss is forced High
- The transmit data line SSITx is arbitrarily forced Low
- When the SSI is configured as a master, it enables the SSIClk pad
- When the SSI is configured as a slave, it disables the SSIClk pad

If the SSI is enabled and there is valid data within the transmit FIFO, the start of transmission is signified by the SSIFss master signal being driven Low. The master SSITx output pad is enabled. After a further one-half SSIClk period, both master and slave data are enabled onto their respective transmission lines. At the same time, SSIClk is enabled with a falling edge transition. Data is then captured on the rising edges and propagated on the falling edges of the SSIClk signal.

After all bits have been transferred, in the case of a single word transmission, the SSIFss line is returned to its idle high state one SSIClk period after the last bit has been captured.

For continuous back-to-back transmissions, the SSIFss pin remains in its active Low state, until the final bit of the last word has been captured, and then returns to its idle state as described above.

For continuous back-to-back transfers, the SSIFss pin is held Low between successive data words and termination is the same as that of the single word transfer.

14.2.4.7 MICROWIRE Frame Format

Figure 14-10 on page 367 shows the MICROWIRE frame format, again for a single frame. Figure 14-11 on page 368 shows the same format when back-to-back frames are transmitted.

Figure 14-10. MICROWIRE Frame Format (Single Frame)

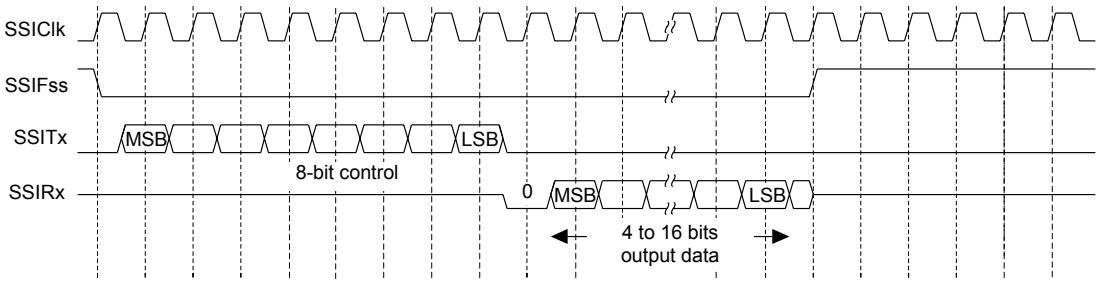

MICROWIRE format is very similar to SPI format, except that transmission is half-duplex instead of full-duplex, using a master-slave message passing technique. Each serial transmission begins with an 8-bit control word that is transmitted from the SSI to the off-chip slave device. During this transmission, no incoming data is received by the SSI. After the message has been sent, the off-chip slave decodes it and, after waiting one serial clock after the last bit of the 8-bit control message has been sent, responds with the required data. The returned data is 4 to 16 bits in length, making the total frame length anywhere from 13 to 25 bits.

In this configuration, during idle periods:

- `SSIClk` is forced Low
- `SSIFss` is forced High
- The transmit data line `SSITx` is arbitrarily forced Low

A transmission is triggered by writing a control byte to the transmit FIFO. The falling edge of `SSIFss` causes the value contained in the bottom entry of the transmit FIFO to be transferred to the serial shift register of the transmit logic, and the MSB of the 8-bit control frame to be shifted out onto the `SSITx` pin. `SSIFss` remains Low for the duration of the frame transmission. The `SSIRx` pin remains tristated during this transmission.

The off-chip serial slave device latches each control bit into its serial shifter on the rising edge of each `SSIClk`. After the last bit is latched by the slave device, the control byte is decoded during a one clock wait-state, and the slave responds by transmitting data back to the SSI. Each bit is driven onto the `SSIRx` line on the falling edge of `SSIClk`. The SSI in turn latches each bit on the rising edge of `SSIClk`. At the end of the frame, for single transfers, the `SSIFss` signal is pulled High one clock period after the last bit has been latched in the receive serial shifter, which causes the data to be transferred to the receive FIFO.

Note: The off-chip slave device can tristate the receive line either on the falling edge of `SSIClk` after the LSB has been latched by the receive shifter, or when the `SSIFss` pin goes High.

For continuous transfers, data transmission begins and ends in the same manner as a single transfer. However, the `SSIFss` line is continuously asserted (held Low) and transmission of data occurs back-to-back. The control byte of the next frame follows directly after the LSB of the received data from the current frame. Each of the received values is transferred from the receive shifter on the falling edge of `SSIClk`, after the LSB of the frame has been latched into the SSI.

Figure 14-11. MICROWIRE Frame Format (Continuous Transfer)

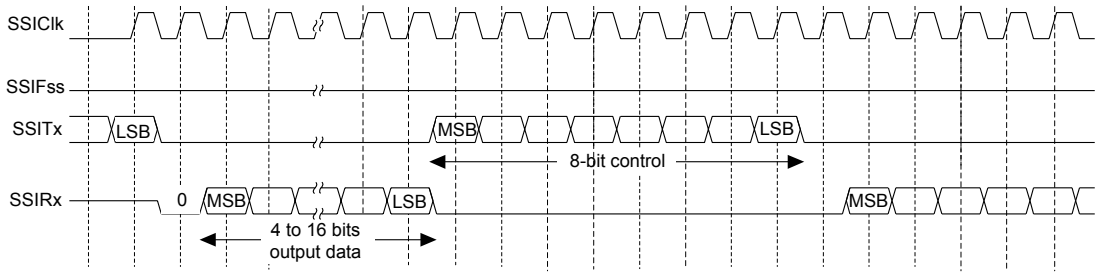

In the MICROWIRE mode, the SSI slave samples the first bit of receive data on the rising edge of `SSIClk` after `SSIFss` has gone Low. Masters that drive a free-running `SSIClk` must ensure that the `SSIFss` signal has sufficient setup and hold margins with respect to the rising edge of `SSIClk`.

Figure 14-12 on page 368 illustrates these setup and hold time requirements. With respect to the `SSIClk` rising edge on which the first bit of receive data is to be sampled by the SSI slave, `SSIFss` must have a setup of at least two times the period of `SSIClk` on which the SSI operates. With respect to the `SSIClk` rising edge previous to this edge, `SSIFss` must have a hold of at least one `SSIClk` period.

Figure 14-12. MICROWIRE Frame Format, SSIFss Input Setup and Hold Requirements

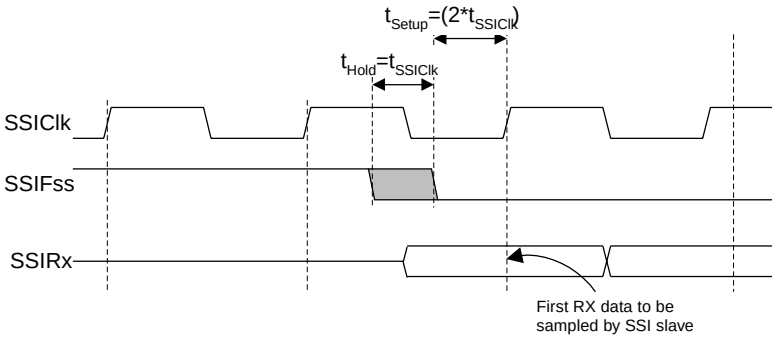

14.3 Initialization and Configuration

To use the SSI, its peripheral clock must be enabled by setting the `SSI` bit in the **RCGC1** register.

For each of the frame formats, the SSI is configured using the following steps:

1. Ensure that the `SSE` bit in the **SSICR1** register is disabled before making any configuration changes.
2. Select whether the SSI is a master or slave:
   a. For master operations, set the **SSICR1** register to 0x0000.0000.
   b. For slave mode (output enabled), set the **SSICR1** register to 0x0000.0004.
   c. For slave mode (output disabled), set the **SSICR1** register to 0x0000.000C.
3. Configure the clock prescale divisor by writing the **SSICPSR** register.
4. Write the **SSICR0** register with the following configuration:

- Serial clock rate (SCR)
- Desired clock phase/polarity, if using Freescale SPI mode (SPH and SPO)
- The protocol mode: Freescale SPI, TI SSF, MICROWIRE (FRF)
- The data size (DSS)

5. Enable the SSI by setting the SSE bit in the **SSICR1** register.

As an example, assume the SSI must be configured to operate with the following parameters:

- Master operation
- Freescale SPI mode (SPO=1, SPH=1)
- 1 Mbps bit rate
- 8 data bits

Assuming the system clock is 20 MHz, the bit rate calculation would be:

```
FSSIClk = FSysClk / (CPSDVSR * (1 + SCR))
1x106 = 20x106 / (CPSDVSR * (1 + SCR))
```

In this case, if CPSDVSR=2, SCR must be 9.

The configuration sequence would be as follows:

1. Ensure that the SSE bit in the **SSICR1** register is disabled.
2. Write the **SSICR1** register with a value of 0x0000.0000.
3. Write the **SSICPSR** register with a value of 0x0000.0002.
4. Write the **SSICR0** register with a value of 0x0000.09C7.
5. The SSI is then enabled by setting the SSE bit in the **SSICR1** register to 1.

14.4 Register Map

Table 14-1 on page 369 lists the SSI registers. The offset listed is a hexadecimal increment to the register's address, relative to that SSI module's base address:

- SSI0: 0x4000.8000

Note: The SSI must be disabled (see the SSE bit in the **SSICR1** register) before any of the control registers are reprogrammed.

Table 14-1. SSI Register Map

Offset	Name	Type	Reset	Description	See page
0x000	SSICR0	R/W	0x0000.0000	SSI Control 0	371
0x004	SSICR1	R/W	0x0000.0000	SSI Control 1	373

Offset	Name	Type	Reset	Description	See page
0x008	SSIDR	R/W	0x0000.0000	SSI Data	375
0x00C	SSISR	RO	0x0000.0003	SSI Status	376
0x010	SSICPSR	R/W	0x0000.0000	SSI Clock Prescale	378
0x014	SSIIM	R/W	0x0000.0000	SSI Interrupt Mask	379
0x018	SSIRIS	RO	0x0000.0008	SSI Raw Interrupt Status	381
0x01C	SSIMIS	RO	0x0000.0000	SSI Masked Interrupt Status	382
0x020	SSIICR	W1C	0x0000.0000	SSI Interrupt Clear	383
0xFD0	SSIPeriphID4	RO	0x0000.0000	SSI Peripheral Identification 4	384
0xFD4	SSIPeriphID5	RO	0x0000.0000	SSI Peripheral Identification 5	385
0xFD8	SSIPeriphID6	RO	0x0000.0000	SSI Peripheral Identification 6	386
0xFDC	SSIPeriphID7	RO	0x0000.0000	SSI Peripheral Identification 7	387
0xFE0	SSIPeriphID0	RO	0x0000.0022	SSI Peripheral Identification 0	388
0xFE4	SSIPeriphID1	RO	0x0000.0000	SSI Peripheral Identification 1	389
0xFE8	SSIPeriphID2	RO	0x0000.0018	SSI Peripheral Identification 2	390
0xFEC	SSIPeriphID3	RO	0x0000.0001	SSI Peripheral Identification 3	391
0xFF0	SSIPCellID0	RO	0x0000.000D	SSI PrimeCell Identification 0	392
0xFF4	SSIPCellID1	RO	0x0000.00F0	SSI PrimeCell Identification 1	393
0xFF8	SSIPCellID2	RO	0x0000.0005	SSI PrimeCell Identification 2	394
0xFFC	SSIPCellID3	RO	0x0000.00B1	SSI PrimeCell Identification 3	395

14.5 Register Descriptions

The remainder of this section lists and describes the SSI registers, in numerical order by address offset.

Register 1: SSI Control 0 (SSICR0), offset 0x000

SSICR0 is control register 0 and contains bit fields that control various functions within the SSI module. Functionality such as protocol mode, clock rate, and data size are configured in this register.

SSI Control 0 (SSICR0)

SSI0 base: 0x4000.8000
Offset 0x000
Type R/W, reset 0x0000.0000

	31	30	29	28	27	26	25	24	23	22	21	20	19	18	17	16
	reserved															
Type	RO	RO	RO	RO	RO	RO	RO	RO	RO	RO	RO	RO	RO	RO	RO	RO
Reset	0	0	0	0	0	0	0	0	0	0	0	0	0	0	0	0

	15	14	13	12	11	10	9	8	7	6	5	4	3	2	1	0
	SCR								SPH	SPO	FRF		DSS			
Type	R/W	R/W	R/W	R/W	R/W	R/W	R/W	R/W	R/W	R/W	R/W	R/W	R/W	R/W	R/W	R/W
Reset	0	0	0	0	0	0	0	0	0	0	0	0	0	0	0	0

Bit/Field	Name	Type	Reset	Description
31:16	reserved	RO	0x00	Software should not rely on the value of a reserved bit. To provide compatibility with future products, the value of a reserved bit should be preserved across a read-modify-write operation.
15:8	SCR	R/W	0x0000	SSI Serial Clock Rate The value `SCR` is used to generate the transmit and receive bit rate of the SSI. The bit rate is: `BR=FSSIClk/(CPSDVSR * (1 + SCR))` where `CPSDVSR` is an even value from 2-254 programmed in the **SSICPSR** register, and `SCR` is a value from 0-255.
7	SPH	R/W	0	SSI Serial Clock Phase This bit is only applicable to the Freescale SPI Format. The `SPH` control bit selects the clock edge that captures data and allows it to change state. It has the most impact on the first bit transmitted by either allowing or not allowing a clock transition before the first data capture edge. When the `SPH` bit is 0, data is captured on the first clock edge transition. If `SPH` is 1, data is captured on the second clock edge transition.
6	SPO	R/W	0	SSI Serial Clock Polarity This bit is only applicable to the Freescale SPI Format. When the `SPO` bit is 0, it produces a steady state Low value on the `SSIClk` pin. If `SPO` is 1, a steady state High value is placed on the `SSIClk` pin when data is not being transferred.

Bit/Field	Name	Type	Reset	Description
5:4	FRF	R/W	0x0	SSI Frame Format Select The FRF values are defined as follows: Value Frame Format 0x0 Freescale SPI Frame Format 0x1 Texas Instruments Synchronous Serial Frame Format 0x2 MICROWIRE Frame Format 0x3 Reserved
3:0	DSS	R/W	0x00	SSI Data Size Select The DSS values are defined as follows: Value Data Size 0x0-0x2 Reserved 0x3 4-bit data 0x4 5-bit data 0x5 6-bit data 0x6 7-bit data 0x7 8-bit data 0x8 9-bit data 0x9 10-bit data 0xA 11-bit data 0xB 12-bit data 0xC 13-bit data 0xD 14-bit data 0xE 15-bit data 0xF 16-bit data

Register 2: SSI Control 1 (SSICR1), offset 0x004

SSICR1 is control register 1 and contains bit fields that control various functions within the SSI module. Master and slave mode functionality is controlled by this register.

SSI Control 1 (SSICR1)

SSI0 base: 0x4000.8000
Offset 0x004
Type R/W, reset 0x0000.0000

	31	30	29	28	27	26	25	24	23	22	21	20	19	18	17	16
	reserved															
Type	RO	RO	RO	RO	RO	RO	RO	RO	RO	RO	RO	RO	RO	RO	RO	RO
Reset	0	0	0	0	0	0	0	0	0	0	0	0	0	0	0	0

	15	14	13	12	11	10	9	8	7	6	5	4	3	2	1	0
	reserved												SOD	MS	SSE	LBM
Type	RO	RO	RO	RO	RO	RO	RO	RO	RO	RO	RO	RO	R/W	R/W	R/W	R/W
Reset	0	0	0	0	0	0	0	0	0	0	0	0	0	0	0	0

Bit/Field	Name	Type	Reset	Description
31:4	reserved	RO	0x00	Software should not rely on the value of a reserved bit. To provide compatibility with future products, the value of a reserved bit should be preserved across a read-modify-write operation.
3	SOD	R/W	0	SSI Slave Mode Output Disable This bit is relevant only in the Slave mode (`MS=1`). In multiple-slave systems, it is possible for the SSI master to broadcast a message to all slaves in the system while ensuring that only one slave drives data onto the serial output line. In such systems, the TXD lines from multiple slaves could be tied together. To operate in such a system, the `SOD` bit can be configured so that the SSI slave does not drive the `SSITx` pin. The `SOD` values are defined as follows: Value Description 0 SSI can drive `SSITx` output in Slave Output mode. 1 SSI must not drive the `SSITx` output in Slave mode.
2	MS	R/W	0	SSI Master/Slave Select This bit selects Master or Slave mode and can be modified only when SSI is disabled (`SSE=0`). The `MS` values are defined as follows: Value Description 0 Device configured as a master. 1 Device configured as a slave.

Bit/Field	Name	Type	Reset	Description
1	SSE	R/W	0	SSI Synchronous Serial Port Enable Setting this bit enables SSI operation. The SSE values are defined as follows: Value Description 0 SSI operation disabled. 1 SSI operation enabled. **Note:** This bit must be set to 0 before any control registers are reprogrammed.
0	LBM	R/W	0	SSI Loopback Mode Setting this bit enables Loopback Test mode. The LBM values are defined as follows: Value Description 0 Normal serial port operation enabled. 1 Output of the transmit serial shift register is connected internally to the input of the receive serial shift register.

Register 3: SSI Data (SSIDR), offset 0x008

SSIDR is the data register and is 16-bits wide. When **SSIDR** is read, the entry in the receive FIFO (pointed to by the current FIFO read pointer) is accessed. As data values are removed by the SSI receive logic from the incoming data frame, they are placed into the entry in the receive FIFO (pointed to by the current FIFO write pointer).

When **SSIDR** is written to, the entry in the transmit FIFO (pointed to by the write pointer) is written to. Data values are removed from the transmit FIFO one value at a time by the transmit logic. It is loaded into the transmit serial shifter, then serially shifted out onto the `SSITx` pin at the programmed bit rate.

When a data size of less than 16 bits is selected, the user must right-justify data written to the transmit FIFO. The transmit logic ignores the unused bits. Received data less than 16 bits is automatically right-justified in the receive buffer.

When the SSI is programmed for MICROWIRE frame format, the default size for transmit data is eight bits (the most significant byte is ignored). The receive data size is controlled by the programmer. The transmit FIFO and the receive FIFO are not cleared even when the `SSE` bit in the **SSICR1** register is set to zero. This allows the software to fill the transmit FIFO before enabling the SSI.

SSI Data (SSIDR)

SSI0 base: 0x4000.8000
Offset 0x008
Type R/W, reset 0x0000.0000

	31	30	29	28	27	26	25	24	23	22	21	20	19	18	17	16
	reserved															
Type	RO	RO	RO	RO	RO	RO	RO	RO	RO	RO	RO	RO	RO	RO	RO	RO
Reset	0	0	0	0	0	0	0	0	0	0	0	0	0	0	0	0

	15	14	13	12	11	10	9	8	7	6	5	4	3	2	1	0
	DATA															
Type	R/W	R/W	R/W	R/W	R/W	R/W	R/W	R/W	R/W	R/W	R/W	R/W	R/W	R/W	R/W	R/W
Reset	0	0	0	0	0	0	0	0	0	0	0	0	0	0	0	0

Bit/Field	Name	Type	Reset	Description
31:16	reserved	RO	0x0000	Software should not rely on the value of a reserved bit. To provide compatibility with future products, the value of a reserved bit should be preserved across a read-modify-write operation.
15:0	DATA	R/W	0x0000	SSI Receive/Transmit Data A read operation reads the receive FIFO. A write operation writes the transmit FIFO. Software must right-justify data when the SSI is programmed for a data size that is less than 16 bits. Unused bits at the top are ignored by the transmit logic. The receive logic automatically right-justifies the data.

Register 4: SSI Status (SSISR), offset 0x00C

SSISR is a status register that contains bits that indicate the FIFO fill status and the SSI busy status.

SSI Status (SSISR)

SSI0 base: 0x4000.8000
Offset 0x00C
Type RO, reset 0x0000.0003

	31	30	29	28	27	26	25	24	23	22	21	20	19	18	17	16
	reserved															
Type	RO	RO	RO	RO	RO	RO	RO	RO	RO	RO	RO	RO	RO	RO	RO	RO
Reset	0	0	0	0	0	0	0	0	0	0	0	0	0	0	0	0

	15	14	13	12	11	10	9	8	7	6	5	4	3	2	1	0
	reserved											BSY	RFF	RNE	TNF	TFE
Type	RO	RO	RO	RO	RO	RO	RO	RO	RO	RO	RO	RO	RO	RO	RO	R0
Reset	0	0	0	0	0	0	0	0	0	0	0	0	0	0	1	1

Bit/Field	Name	Type	Reset	Description
31:5	reserved	RO	0x00	Software should not rely on the value of a reserved bit. To provide compatibility with future products, the value of a reserved bit should be preserved across a read-modify-write operation.
4	BSY	RO	0	SSI Busy Bit The BSY values are defined as follows: Value Description 0 SSI is idle. 1 SSI is currently transmitting and/or receiving a frame, or the transmit FIFO is not empty.
3	RFF	RO	0	SSI Receive FIFO Full The RFF values are defined as follows: Value Description 0 Receive FIFO is not full. 1 Receive FIFO is full.
2	RNE	RO	0	SSI Receive FIFO Not Empty The RNE values are defined as follows: Value Description 0 Receive FIFO is empty. 1 Receive FIFO is not empty.
1	TNF	RO	1	SSI Transmit FIFO Not Full The TNF values are defined as follows: Value Description 0 Transmit FIFO is full. 1 Transmit FIFO is not full.

Bit/Field	Name	Type	Reset	Description
0	TFE	R0	1	SSI Transmit FIFO Empty The TFE values are defined as follows: Value Description 0 Transmit FIFO is not empty. 1 Transmit FIFO is empty.

Register 5: SSI Clock Prescale (SSICPSR), offset 0x010

SSICPSR is the clock prescale register and specifies the division factor by which the system clock must be internally divided before further use.

The value programmed into this register must be an even number between 2 and 254. The least-significant bit of the programmed number is hard-coded to zero. If an odd number is written to this register, data read back from this register has the least-significant bit as zero.

SSI Clock Prescale (SSICPSR)

SSI0 base: 0x4000.8000
Offset 0x010
Type R/W, reset 0x0000.0000

	31	30	29	28	27	26	25	24	23	22	21	20	19	18	17	16
	reserved															
Type	RO	RO	RO	RO	RO	RO	RO	RO	RO	RO	RO	RO	RO	RO	RO	RO
Reset	0	0	0	0	0	0	0	0	0	0	0	0	0	0	0	0

	15	14	13	12	11	10	9	8	7	6	5	4	3	2	1	0
	reserved								CPSDVSR							
Type	RO	RO	RO	RO	RO	RO	RO	RO	R/W	R/W	R/W	R/W	R/W	R/W	R/W	R/W
Reset	0	0	0	0	0	0	0	0	0	0	0	0	0	0	0	0

Bit/Field	Name	Type	Reset	Description
31:8	reserved	RO	0x00	Software should not rely on the value of a reserved bit. To provide compatibility with future products, the value of a reserved bit should be preserved across a read-modify-write operation.
7:0	CPSDVSR	R/W	0x00	SSI Clock Prescale Divisor This value must be an even number from 2 to 254, depending on the frequency of `SSIClk`. The LSB always returns 0 on reads.

Register 6: SSI Interrupt Mask (SSIIM), offset 0x014

The **SSIIM** register is the interrupt mask set or clear register. It is a read/write register and all bits are cleared to 0 on reset.

On a read, this register gives the current value of the mask on the relevant interrupt. A write of 1 to the particular bit sets the mask, enabling the interrupt to be read. A write of 0 clears the corresponding mask.

SSI Interrupt Mask (SSIIM)

SSI0 base: 0x4000.8000
Offset 0x014
Type R/W, reset 0x0000.0000

	31	30	29	28	27	26	25	24	23	22	21	20	19	18	17	16
	reserved															
Type	RO	RO	RO	RO	RO	RO	RO	RO	RO	RO	RO	RO	RO	RO	RO	RO
Reset	0	0	0	0	0	0	0	0	0	0	0	0	0	0	0	0

	15	14	13	12	11	10	9	8	7	6	5	4	3	2	1	0
	reserved												TXIM	RXIM	RTIM	RORIM
Type	RO	RO	RO	RO	RO	RO	RO	RO	RO	RO	RO	RO	R/W	R/W	R/W	R/W
Reset	0	0	0	0	0	0	0	0	0	0	0	0	0	0	0	0

Bit/Field	Name	Type	Reset	Description
31:4	reserved	RO	0x00	Software should not rely on the value of a reserved bit. To provide compatibility with future products, the value of a reserved bit should be preserved across a read-modify-write operation.
3	TXIM	R/W	0	SSI Transmit FIFO Interrupt Mask The `TXIM` values are defined as follows: Value Description 0 TX FIFO half-full or less condition interrupt is masked. 1 TX FIFO half-full or less condition interrupt is not masked.
2	RXIM	R/W	0	SSI Receive FIFO Interrupt Mask The `RXIM` values are defined as follows: Value Description 0 RX FIFO half-full or more condition interrupt is masked. 1 RX FIFO half-full or more condition interrupt is not masked.
1	RTIM	R/W	0	SSI Receive Time-Out Interrupt Mask The `RTIM` values are defined as follows: Value Description 0 RX FIFO time-out interrupt is masked. 1 RX FIFO time-out interrupt is not masked.

Bit/Field	Name	Type	Reset	Description
0	RORIM	R/W	0	SSI Receive Overrun Interrupt Mask The `RORIM` values are defined as follows: Value Description 0 RX FIFO overrun interrupt is masked. 1 RX FIFO overrun interrupt is not masked.

Register 7: SSI Raw Interrupt Status (SSIRIS), offset 0x018

The **SSIRIS** register is the raw interrupt status register. On a read, this register gives the current raw status value of the corresponding interrupt prior to masking. A write has no effect.

SSI Raw Interrupt Status (SSIRIS)

SSI0 base: 0x4000.8000
Offset 0x018
Type RO, reset 0x0000.0008

	31	30	29	28	27	26	25	24	23	22	21	20	19	18	17	16
	reserved															
Type	RO	RO	RO	RO	RO	RO	RO	RO	RO	RO	RO	RO	RO	RO	RO	RO
Reset	0	0	0	0	0	0	0	0	0	0	0	0	0	0	0	0

	15	14	13	12	11	10	9	8	7	6	5	4	3	2	1	0
	reserved												TXRIS	RXRIS	RTRIS	RORRIS
Type	RO	RO	RO	RO	RO	RO	RO	RO	RO	RO	RO	RO	RO	RO	RO	RO
Reset	0	0	0	0	0	0	0	0	0	0	0	0	1	0	0	0

Bit/Field	Name	Type	Reset	Description
31:4	reserved	RO	0x00	Software should not rely on the value of a reserved bit. To provide compatibility with future products, the value of a reserved bit should be preserved across a read-modify-write operation.
3	TXRIS	RO	1	SSI Transmit FIFO Raw Interrupt Status Indicates that the transmit FIFO is half full or less, when set.
2	RXRIS	RO	0	SSI Receive FIFO Raw Interrupt Status Indicates that the receive FIFO is half full or more, when set.
1	RTRIS	RO	0	SSI Receive Time-Out Raw Interrupt Status Indicates that the receive time-out has occurred, when set.
0	RORRIS	RO	0	SSI Receive Overrun Raw Interrupt Status Indicates that the receive FIFO has overflowed, when set.

Register 8: SSI Masked Interrupt Status (SSIMIS), offset 0x01C

The **SSIMIS** register is the masked interrupt status register. On a read, this register gives the current masked status value of the corresponding interrupt. A write has no effect.

SSI Masked Interrupt Status (SSIMIS)

SSI0 base: 0x4000.8000
Offset 0x01C
Type RO, reset 0x0000.0000

	31	30	29	28	27	26	25	24	23	22	21	20	19	18	17	16
	reserved															
Type	RO	RO	RO	RO	RO	RO	RO	RO	RO	RO	RO	RO	RO	RO	RO	RO
Reset	0	0	0	0	0	0	0	0	0	0	0	0	0	0	0	0

	15	14	13	12	11	10	9	8	7	6	5	4	3	2	1	0
	reserved												TXMIS	RXMIS	RTMIS	RORMIS
Type	RO	RO	RO	RO	RO	RO	RO	RO	RO	RO	RO	RO	RO	RO	RO	RO
Reset	0	0	0	0	0	0	0	0	0	0	0	0	0	0	0	0

Bit/Field	Name	Type	Reset	Description
31:4	reserved	RO	0	Software should not rely on the value of a reserved bit. To provide compatibility with future products, the value of a reserved bit should be preserved across a read-modify-write operation.
3	TXMIS	RO	0	SSI Transmit FIFO Masked Interrupt Status Indicates that the transmit FIFO is half full or less, when set.
2	RXMIS	RO	0	SSI Receive FIFO Masked Interrupt Status Indicates that the receive FIFO is half full or more, when set.
1	RTMIS	RO	0	SSI Receive Time-Out Masked Interrupt Status Indicates that the receive time-out has occurred, when set.
0	RORMIS	RO	0	SSI Receive Overrun Masked Interrupt Status Indicates that the receive FIFO has overflowed, when set.

Register 9: SSI Interrupt Clear (SSIICR), offset 0x020

The **SSIICR** register is the interrupt clear register. On a write of 1, the corresponding interrupt is cleared. A write of 0 has no effect.

SSI Interrupt Clear (SSIICR)

SSI0 base: 0x4000.8000
Offset 0x020
Type W1C, reset 0x0000.0000

	31	30	29	28	27	26	25	24	23	22	21	20	19	18	17	16
	reserved															
Type	RO	RO	RO	RO	RO	RO	RO	RO	RO	RO	RO	RO	RO	RO	RO	RO
Reset	0	0	0	0	0	0	0	0	0	0	0	0	0	0	0	0

	15	14	13	12	11	10	9	8	7	6	5	4	3	2	1	0
	reserved														RTIC	RORIC
Type	RO	RO	RO	RO	RO	RO	RO	RO	RO	RO	RO	RO	RO	RO	W1C	W1C
Reset	0	0	0	0	0	0	0	0	0	0	0	0	0	0	0	0

Bit/Field	Name	Type	Reset	Description
31:2	reserved	RO	0x00	Software should not rely on the value of a reserved bit. To provide compatibility with future products, the value of a reserved bit should be preserved across a read-modify-write operation.
1	RTIC	W1C	0	SSI Receive Time-Out Interrupt Clear The `RTIC` values are defined as follows: Value Description 0 No effect on interrupt. 1 Clears interrupt.
0	RORIC	W1C	0	SSI Receive Overrun Interrupt Clear The `RORIC` values are defined as follows: Value Description 0 No effect on interrupt. 1 Clears interrupt.

Register 10: SSI Peripheral Identification 4 (SSIPeriphID4), offset 0xFD0

The **SSIPeriphIDn** registers are hard-coded and the fields within the register determine the reset value.

SSI Peripheral Identification 4 (SSIPeriphID4)

SSI0 base: 0x4000.8000
Offset 0xFD0
Type RO, reset 0x0000.0000

	31	30	29	28	27	26	25	24	23	22	21	20	19	18	17	16
	reserved															
Type	RO	RO	RO	RO	RO	RO	RO	RO	RO	RO	RO	RO	RO	RO	RO	RO
Reset	0	0	0	0	0	0	0	0	0	0	0	0	0	0	0	0

	15	14	13	12	11	10	9	8	7	6	5	4	3	2	1	0
	reserved								PID4							
Type	RO	RO	RO	RO	RO	RO	RO	RO	RO	RO	RO	RO	RO	RO	RO	RO
Reset	0	0	0	0	0	0	0	0	0	0	0	0	0	0	0	0

Bit/Field	Name	Type	Reset	Description
31:8	reserved	RO	0x00	Software should not rely on the value of a reserved bit. To provide compatibility with future products, the value of a reserved bit should be preserved across a read-modify-write operation.
7:0	PID4	RO	0x00	SSI Peripheral ID Register[7:0] Can be used by software to identify the presence of this peripheral.

Register 11: SSI Peripheral Identification 5 (SSIPeriphID5), offset 0xFD4

The **SSIPeriphIDn** registers are hard-coded and the fields within the register determine the reset value.

SSI Peripheral Identification 5 (SSIPeriphID5)

SSI0 base: 0x4000.8000
Offset 0xFD4
Type RO, reset 0x0000.0000

	31	30	29	28	27	26	25	24	23	22	21	20	19	18	17	16
	reserved															
Type	RO	RO	RO	RO	RO	RO	RO	RO	RO	RO	RO	RO	RO	RO	RO	RO
Reset	0	0	0	0	0	0	0	0	0	0	0	0	0	0	0	0

	15	14	13	12	11	10	9	8	7	6	5	4	3	2	1	0
	reserved								PID5							
Type	RO	RO	RO	RO	RO	RO	RO	RO	RO	RO	RO	RO	RO	RO	RO	RO
Reset	0	0	0	0	0	0	0	0	0	0	0	0	0	0	0	0

Bit/Field	Name	Type	Reset	Description
31:8	reserved	RO	0x00	Software should not rely on the value of a reserved bit. To provide compatibility with future products, the value of a reserved bit should be preserved across a read-modify-write operation.
7:0	PID5	RO	0x00	SSI Peripheral ID Register[15:8] Can be used by software to identify the presence of this peripheral.

Register 12: SSI Peripheral Identification 6 (SSIPeriphID6), offset 0xFD8

The **SSIPeriphIDn** registers are hard-coded and the fields within the register determine the reset value.

SSI Peripheral Identification 6 (SSIPeriphID6)

SSI0 base: 0x4000.8000
Offset 0xFD8
Type RO, reset 0x0000.0000

	31	30	29	28	27	26	25	24	23	22	21	20	19	18	17	16
	reserved															
Type	RO	RO	RO	RO	RO	RO	RO	RO	RO	RO	RO	RO	RO	RO	RO	RO
Reset	0	0	0	0	0	0	0	0	0	0	0	0	0	0	0	0

	15	14	13	12	11	10	9	8	7	6	5	4	3	2	1	0
	reserved								PID6							
Type	RO	RO	RO	RO	RO	RO	RO	RO	RO	RO	RO	RO	RO	RO	RO	RO
Reset	0	0	0	0	0	0	0	0	0	0	0	0	0	0	0	0

Bit/Field	Name	Type	Reset	Description
31:8	reserved	RO	0x00	Software should not rely on the value of a reserved bit. To provide compatibility with future products, the value of a reserved bit should be preserved across a read-modify-write operation.
7:0	PID6	RO	0x00	SSI Peripheral ID Register[23:16] Can be used by software to identify the presence of this peripheral.

Register 13: SSI Peripheral Identification 7 (SSIPeriphID7), offset 0xFDC

The **SSIPeriphIDn** registers are hard-coded and the fields within the register determine the reset value.

SSI Peripheral Identification 7 (SSIPeriphID7)

SSI0 base: 0x4000.8000
Offset 0xFDC
Type RO, reset 0x0000.0000

	31	30	29	28	27	26	25	24	23	22	21	20	19	18	17	16
	reserved															
Type	RO	RO	RO	RO	RO	RO	RO	RO	RO	RO	RO	RO	RO	RO	RO	RO
Reset	0	0	0	0	0	0	0	0	0	0	0	0	0	0	0	0

	15	14	13	12	11	10	9	8	7	6	5	4	3	2	1	0
	reserved								PID7							
Type	RO	RO	RO	RO	RO	RO	RO	RO	RO	RO	RO	RO	RO	RO	RO	RO
Reset	0	0	0	0	0	0	0	0	0	0	0	0	0	0	0	0

Bit/Field	Name	Type	Reset	Description
31:8	reserved	RO	0x00	Software should not rely on the value of a reserved bit. To provide compatibility with future products, the value of a reserved bit should be preserved across a read-modify-write operation.
7:0	PID7	RO	0x00	SSI Peripheral ID Register[31:24] Can be used by software to identify the presence of this peripheral.

Register 14: SSI Peripheral Identification 0 (SSIPeriphID0), offset 0xFE0

The **SSIPeriphIDn** registers are hard-coded and the fields within the register determine the reset value.

SSI Peripheral Identification 0 (SSIPeriphID0)

SSI0 base: 0x4000.8000
Offset 0xFE0
Type RO, reset 0x0000.0022

	31	30	29	28	27	26	25	24	23	22	21	20	19	18	17	16
	reserved															
Type	RO	RO	RO	RO	RO	RO	RO	RO	RO	RO	RO	RO	RO	RO	RO	RO
Reset	0	0	0	0	0	0	0	0	0	0	0	0	0	0	0	0

	15	14	13	12	11	10	9	8	7	6	5	4	3	2	1	0
	reserved								PID0							
Type	RO	RO	RO	RO	RO	RO	RO	RO	RO	RO	RO	RO	RO	RO	RO	RO
Reset	0	0	0	0	0	0	0	0	0	0	1	0	0	0	1	0

Bit/Field	Name	Type	Reset	Description
31:8	reserved	RO	0	Software should not rely on the value of a reserved bit. To provide compatibility with future products, the value of a reserved bit should be preserved across a read-modify-write operation.
7:0	PID0	RO	0x22	SSI Peripheral ID Register[7:0] Can be used by software to identify the presence of this peripheral.

Register 15: SSI Peripheral Identification 1 (SSIPeriphID1), offset 0xFE4

The **SSIPeriphIDn** registers are hard-coded and the fields within the register determine the reset value.

SSI Peripheral Identification 1 (SSIPeriphID1)

SSI0 base: 0x4000.8000
Offset 0xFE4
Type RO, reset 0x0000.0000

	31	30	29	28	27	26	25	24	23	22	21	20	19	18	17	16
	reserved															
Type	RO	RO	RO	RO	RO	RO	RO	RO	RO	RO	RO	RO	RO	RO	RO	RO
Reset	0	0	0	0	0	0	0	0	0	0	0	0	0	0	0	0

	15	14	13	12	11	10	9	8	7	6	5	4	3	2	1	0
	reserved								PID1							
Type	RO	RO	RO	RO	RO	RO	RO	RO	RO	RO	RO	RO	RO	RO	RO	RO
Reset	0	0	0	0	0	0	0	0	0	0	0	0	0	0	0	0

Bit/Field	Name	Type	Reset	Description
31:8	reserved	RO	0x00	Software should not rely on the value of a reserved bit. To provide compatibility with future products, the value of a reserved bit should be preserved across a read-modify-write operation.
7:0	PID1	RO	0x00	SSI Peripheral ID Register [15:8] Can be used by software to identify the presence of this peripheral.

Register 16: SSI Peripheral Identification 2 (SSIPeriphID2), offset 0xFE8

The **SSIPeriphIDn** registers are hard-coded and the fields within the register determine the reset value.

SSI Peripheral Identification 2 (SSIPeriphID2)

SSI0 base: 0x4000.8000
Offset 0xFE8
Type RO, reset 0x0000.0018

	31	30	29	28	27	26	25	24	23	22	21	20	19	18	17	16
	reserved															
Type	RO	RO	RO	RO	RO	RO	RO	RO	RO	RO	RO	RO	RO	RO	RO	RO
Reset	0	0	0	0	0	0	0	0	0	0	0	0	0	0	0	0

	15	14	13	12	11	10	9	8	7	6	5	4	3	2	1	0
	reserved								PID2							
Type	RO	RO	RO	RO	RO	RO	RO	RO	RO	RO	RO	RO	RO	RO	RO	RO
Reset	0	0	0	0	0	0	0	0	0	0	0	1	1	0	0	0

Bit/Field	Name	Type	Reset	Description
31:8	reserved	RO	0x00	Software should not rely on the value of a reserved bit. To provide compatibility with future products, the value of a reserved bit should be preserved across a read-modify-write operation.
7:0	PID2	RO	0x18	SSI Peripheral ID Register [23:16] Can be used by software to identify the presence of this peripheral.

Register 17: SSI Peripheral Identification 3 (SSIPeriphID3), offset 0xFEC

The **SSIPeriphIDn** registers are hard-coded and the fields within the register determine the reset value.

SSI Peripheral Identification 3 (SSIPeriphID3)

SSI0 base: 0x4000.8000
Offset 0xFEC
Type RO, reset 0x0000.0001

	31	30	29	28	27	26	25	24	23	22	21	20	19	18	17	16
	reserved															
Type	RO	RO	RO	RO	RO	RO	RO	RO	RO	RO	RO	RO	RO	RO	RO	RO
Reset	0	0	0	0	0	0	0	0	0	0	0	0	0	0	0	0

	15	14	13	12	11	10	9	8	7	6	5	4	3	2	1	0
	reserved								PID3							
Type	RO	RO	RO	RO	RO	RO	RO	RO	RO	RO	RO	RO	RO	RO	RO	RO
Reset	0	0	0	0	0	0	0	0	0	0	0	0	0	0	0	1

Bit/Field	Name	Type	Reset	Description
31:8	reserved	RO	0x00	Software should not rely on the value of a reserved bit. To provide compatibility with future products, the value of a reserved bit should be preserved across a read-modify-write operation.
7:0	PID3	RO	0x01	SSI Peripheral ID Register [31:24] Can be used by software to identify the presence of this peripheral.

Register 18: SSI PrimeCell Identification 0 (SSIPCellID0), offset 0xFF0

The **SSIPCellIDn** registers are hard-coded, and the fields within the register determine the reset value.

SSI PrimeCell Identification 0 (SSIPCellID0)

SSI0 base: 0x4000.8000
Offset 0xFF0
Type RO, reset 0x0000.000D

	31	30	29	28	27	26	25	24	23	22	21	20	19	18	17	16
	reserved															
Type	RO	RO	RO	RO	RO	RO	RO	RO	RO	RO	RO	RO	RO	RO	RO	RO
Reset	0	0	0	0	0	0	0	0	0	0	0	0	0	0	0	0

	15	14	13	12	11	10	9	8	7	6	5	4	3	2	1	0
	reserved								CID0							
Type	RO	RO	RO	RO	RO	RO	RO	RO	RO	RO	RO	RO	RO	RO	RO	RO
Reset	0	0	0	0	0	0	0	0	0	0	0	0	1	1	0	1

Bit/Field	Name	Type	Reset	Description
31:8	reserved	RO	0x00	Software should not rely on the value of a reserved bit. To provide compatibility with future products, the value of a reserved bit should be preserved across a read-modify-write operation.
7:0	CID0	RO	0x0D	SSI PrimeCell ID Register [7:0] Provides software a standard cross-peripheral identification system.

Register 19: SSI PrimeCell Identification 1 (SSIPCellID1), offset 0xFF4

The **SSIPCellIDn** registers are hard-coded, and the fields within the register determine the reset value.

SSI PrimeCell Identification 1 (SSIPCellID1)

SSI0 base: 0x4000.8000
Offset 0xFF4
Type RO, reset 0x0000.00F0

	31	30	29	28	27	26	25	24	23	22	21	20	19	18	17	16
	reserved															
Type	RO	RO	RO	RO	RO	RO	RO	RO	RO	RO	RO	RO	RO	RO	RO	RO
Reset	0	0	0	0	0	0	0	0	0	0	0	0	0	0	0	0

	15	14	13	12	11	10	9	8	7	6	5	4	3	2	1	0
	reserved								CID1							
Type	RO	RO	RO	RO	RO	RO	RO	RO	RO	RO	RO	RO	RO	RO	RO	RO
Reset	0	0	0	0	0	0	0	0	1	1	1	1	0	0	0	0

Bit/Field	Name	Type	Reset	Description
31:8	reserved	RO	0x00	Software should not rely on the value of a reserved bit. To provide compatibility with future products, the value of a reserved bit should be preserved across a read-modify-write operation.
7:0	CID1	RO	0xF0	SSI PrimeCell ID Register [15:8] Provides software a standard cross-peripheral identification system.

Register 20: SSI PrimeCell Identification 2 (SSIPCellID2), offset 0xFF8

The **SSIPCellIDn** registers are hard-coded, and the fields within the register determine the reset value.

SSI PrimeCell Identification 2 (SSIPCellID2)

SSI0 base: 0x4000.8000
Offset 0xFF8
Type RO, reset 0x0000.0005

	31	30	29	28	27	26	25	24	23	22	21	20	19	18	17	16
	reserved															
Type	RO	RO	RO	RO	RO	RO	RO	RO	RO	RO	RO	RO	RO	RO	RO	RO
Reset	0	0	0	0	0	0	0	0	0	0	0	0	0	0	0	0

	15	14	13	12	11	10	9	8	7	6	5	4	3	2	1	0
	reserved								CID2							
Type	RO	RO	RO	RO	RO	RO	RO	RO	RO	RO	RO	RO	RO	RO	RO	RO
Reset	0	0	0	0	0	0	0	0	0	0	0	0	0	1	0	1

Bit/Field	Name	Type	Reset	Description
31:8	reserved	RO	0x00	Software should not rely on the value of a reserved bit. To provide compatibility with future products, the value of a reserved bit should be preserved across a read-modify-write operation.
7:0	CID2	RO	0x05	SSI PrimeCell ID Register [23:16] Provides software a standard cross-peripheral identification system.

Register 21: SSI PrimeCell Identification 3 (SSIPCellID3), offset 0xFFC

The **SSIPCellIDn** registers are hard-coded, and the fields within the register determine the reset value.

SSI PrimeCell Identification 3 (SSIPCellID3)

SSI0 base: 0x4000.8000
Offset 0xFFC
Type RO, reset 0x0000.00B1

	31	30	29	28	27	26	25	24	23	22	21	20	19	18	17	16
	reserved															
Type	RO	RO	RO	RO	RO	RO	RO	RO	RO	RO	RO	RO	RO	RO	RO	RO
Reset	0	0	0	0	0	0	0	0	0	0	0	0	0	0	0	0

	15	14	13	12	11	10	9	8	7	6	5	4	3	2	1	0
	reserved								CID3							
Type	RO	RO	RO	RO	RO	RO	RO	RO	RO	RO	RO	RO	RO	RO	RO	RO
Reset	0	0	0	0	0	0	0	0	1	0	1	1	0	0	0	1

Bit/Field	Name	Type	Reset	Description
31:8	reserved	RO	0x00	Software should not rely on the value of a reserved bit. To provide compatibility with future products, the value of a reserved bit should be preserved across a read-modify-write operation.
7:0	CID3	RO	0xB1	SSI PrimeCell ID Register [31:24] Provides software a standard cross-peripheral identification system.

15 Inter-Integrated Circuit (I^2C) Interface

The Inter-Integrated Circuit (I^2C) bus provides bi-directional data transfer through a two-wire design (a serial data line SDA and a serial clock line SCL), and interfaces to external I^2C devices such as serial memory (RAMs and ROMs), networking devices, LCDs, tone generators, and so on. The I^2C bus may also be used for system testing and diagnostic purposes in product development and manufacture. The LM3S8962 microcontroller includes one I^2C module, providing the ability to interact (both send and receive) with other I^2C devices on the bus.

The Stellaris® I^2C interface has the following features:

- Devices on the I^2C bus can be designated as either a master or a slave
  - Supports both sending and receiving data as either a master or a slave
  - Supports simultaneous master and slave operation
- Four I^2C modes
  - Master transmit
  - Master receive
  - Slave transmit
  - Slave receive
- Two transmission speeds: Standard (100 Kbps) and Fast (400 Kbps)
- Master and slave interrupt generation
  - Master generates interrupts when a transmit or receive operation completes (or aborts due to an error)
  - Slave generates interrupts when data has been sent or requested by a master
- Master with arbitration and clock synchronization, multimaster support, and 7-bit addressing mode

15.1 Block Diagram

Figure 15-1. I²C Block Diagram

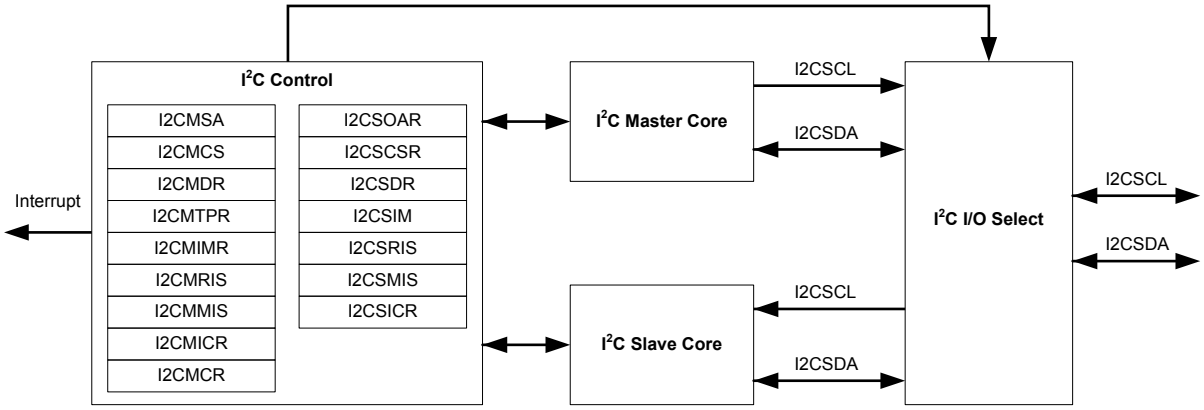

15.2 Functional Description

The I²C module is comprised of both master and slave functions which are implemented as separate peripherals. For proper operation, the SDA and SCL pins must be connected to bi-directional open-drain pads. A typical I²C bus configuration is shown in Figure 15-2 on page 397.

See "Inter-Integrated Circuit (I²C) Interface" on page 632 for I²C timing diagrams.

Figure 15-2. I²C Bus Configuration

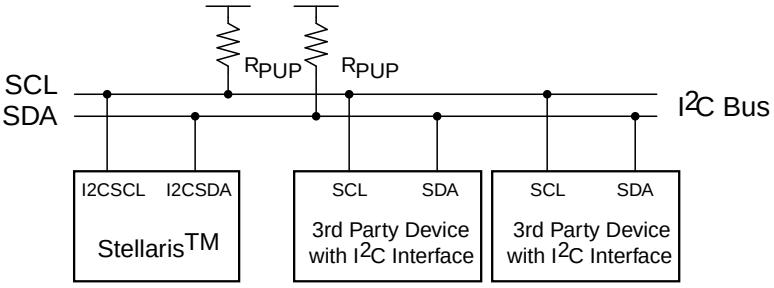

15.2.1 I²C Bus Functional Overview

The I²C bus uses only two signals: SDA and SCL, named `I2CSDA` and `I2CSCL` on Stellaris® microcontrollers. SDA is the bi-directional serial data line and SCL is the bi-directional serial clock line. The bus is considered idle when both lines are High.

Every transaction on the I²C bus is nine bits long, consisting of eight data bits and a single acknowledge bit. The number of bytes per transfer (defined as the time between a valid START and STOP condition, described in "START and STOP Conditions" on page 398) is unrestricted, but each byte has to be followed by an acknowledge bit, and data must be transferred MSB first. When a receiver cannot receive another complete byte, it can hold the clock line SCL Low and force the transmitter into a wait state. The data transfer continues when the receiver releases the clock SCL.

15.2.1.1 START and STOP Conditions

The protocol of the I2C bus defines two states to begin and end a transaction: START and STOP. A High-to-Low transition on the SDA line while the SCL is High is defined as a START condition, and a Low-to-High transition on the SDA line while SCL is High is defined as a STOP condition. The bus is considered busy after a START condition and free after a STOP condition. See Figure 15-3 on page 398.

Figure 15-3. START and STOP Conditions

15.2.1.2 Data Format with 7-Bit Address

Data transfers follow the format shown in Figure 15-4 on page 398. After the START condition, a slave address is sent. This address is 7-bits long followed by an eighth bit, which is a data direction bit (R/S bit in the **I2CMSA** register). A zero indicates a transmit operation (send), and a one indicates a request for data (receive). A data transfer is always terminated by a STOP condition generated by the master, however, a master can initiate communications with another device on the bus by generating a repeated START condition and addressing another slave without first generating a STOP condition. Various combinations of receive/send formats are then possible within a single transfer.

Figure 15-4. Complete Data Transfer with a 7-Bit Address

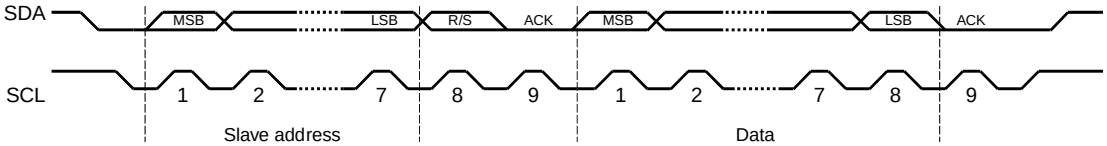

The first seven bits of the first byte make up the slave address (see Figure 15-5 on page 398). The eighth bit determines the direction of the message. A zero in the R/S position of the first byte means that the master will write (send) data to the selected slave, and a one in this position means that the master will receive data from the slave.

Figure 15-5. R/S Bit in First Byte

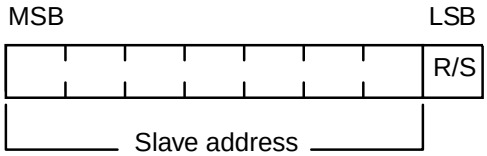

15.2.1.3 Data Validity

The data on the SDA line must be stable during the high period of the clock, and the data line can only change when SCL is Low (see Figure 15-6 on page 399).

Figure 15-6. Data Validity During Bit Transfer on the I²C Bus

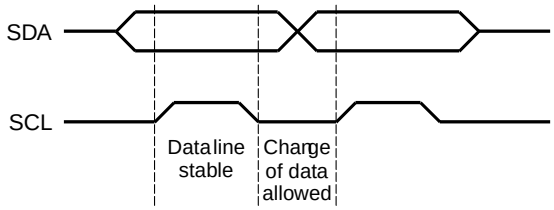

15.2.1.4 Acknowledge

All bus transactions have a required acknowledge clock cycle that is generated by the master. During the acknowledge cycle, the transmitter (which can be the master or slave) releases the SDA line. To acknowledge the transaction, the receiver must pull down SDA during the acknowledge clock cycle. The data sent out by the receiver during the acknowledge cycle must comply with the data validity requirements described in “Data Validity” on page 398.

When a slave receiver does not acknowledge the slave address, SDA must be left High by the slave so that the master can generate a STOP condition and abort the current transfer. If the master device is acting as a receiver during a transfer, it is responsible for acknowledging each transfer made by the slave. Since the master controls the number of bytes in the transfer, it signals the end of data to the slave transmitter by not generating an acknowledge on the last data byte. The slave transmitter must then release SDA to allow the master to generate the STOP or a repeated START condition.

15.2.1.5 Arbitration

A master may start a transfer only if the bus is idle. It's possible for two or more masters to generate a START condition within minimum hold time of the START condition. In these situations, an arbitration scheme takes place on the SDA line, while SCL is High. During arbitration, the first of the competing master devices to place a '1' (High) on SDA while another master transmits a '0' (Low) will switch off its data output stage and retire until the bus is idle again.

Arbitration can take place over several bits. Its first stage is a comparison of address bits, and if both masters are trying to address the same device, arbitration continues on to the comparison of data bits.

15.2.2 Available Speed Modes

The I²C clock rate is determined by the parameters: `CLK_PRD`, `TIMER_PRD`, `SCL_LP`, and `SCL_HP`.

where:

`CLK_PRD` is the system clock period

`SCL_LP` is the low phase of SCL (fixed at 6)

`SCL_HP` is the high phase of SCL (fixed at 4)

`TIMER_PRD` is the programmed value in the **I²C Master Timer Period (I2CMTPR)** register (see page 417).

The I²C clock period is calculated as follows:

```
SCL_PERIOD = 2*(1 + TIMER_PRD)*(SCL_LP + SCL_HP)*CLK_PRD
```

For example:

```
CLK_PRD = 50 ns
TIMER_PRD = 2
SCL_LP=6
SCL_HP=4
```

yields a SCL frequency of:

```
1/T = 333 Khz
```

Table 15-1 on page 400 gives examples of timer period, system clock, and speed mode (Standard or Fast).

Table 15-1. Examples of I2C Master Timer Period versus Speed Mode

System Clock	Timer Period	Standard Mode	Timer Period	Fast Mode
4 MHz	0x01	100 Kbps	-	-
6 MHz	0x02	100 Kbps	-	-
12.5 MHz	0x06	89 Kbps	0x01	312 Kbps
16.7 MHz	0x08	93 Kbps	0x02	278 Kbps
20 MHz	0x09	100 Kbps	0x02	333 Kbps
25 MHz	0x0C	96.2 Kbps	0x03	312 Kbps
33 MHz	0x10	97.1 Kbps	0x04	330 Kbps
40 MHz	0x13	100 Kbps	0x04	400 Kbps
50 MHz	0x18	100 Kbps	0x06	357 Kbps

15.2.3 Interrupts

The I2C can generate interrupts when the following conditions are observed:

- Master transaction completed
- Master transaction error
- Slave transaction received
- Slave transaction requested

There is a separate interrupt signal for the I2C master and I2C slave modules. While both modules can generate interrupts for multiple conditions, only a single interrupt signal is sent to the interrupt controller.

15.2.3.1 I2C Master Interrupts

The I2C master module generates an interrupt when a transaction completes (either transmit or receive), or when an error occurs during a transaction. To enable the I2C master interrupt, software must write a '1' to the **I2C Master Interrupt Mask (I2CMIMR)** register. When an interrupt condition is met, software must check the ERROR bit in the **I2C Master Control/Status (I2CMCS)** register to verify that an error didn't occur during the last transaction. An error condition is asserted if the last transaction wasn't acknowledge by the slave or if the master was forced to give up ownership of the bus due to a lost arbitration round with another master. If an error is not detected, the application can proceed with the transfer. The interrupt is cleared by writing a '1' to the **I2C Master Interrupt Clear (I2CMICR)** register.

If the application doesn't require the use of interrupts, the raw interrupt status is always visible via the **I²C Master Raw Interrupt Status (I2CMRIS)** register.

15.2.3.2 I²C Slave Interrupts

The slave module can generate an interrupt when data has been received or requested. This interrupt is enabled by writing a 1 to the `DATAIM` bit in the **I²C Slave Interrupt Mask (I2CSIMR)** register. Software determines whether the module should write (transmit) or read (receive) data from the **I²C Slave Data (I2CSDR)** register, by checking the `RREQ` and `TREQ` bits of the **I²C Slave Control/Status (I2CSCSR)** register. If the slave module is in receive mode and the first byte of a transfer is received, the `FBR` bit is set along with the `RREQ` bit. The interrupt is cleared by writing a 1 to the `DATAIC` bit in the **I²C Slave Interrupt Clear (I2CSICR)** register.

If the application doesn't require the use of interrupts, the raw interrupt status is always visible via the **I²C Slave Raw Interrupt Status (I2CSRIS)** register.

15.2.4 Loopback Operation

The I²C modules can be placed into an internal loopback mode for diagnostic or debug work. This is accomplished by setting the `LPBK` bit in the **I²C Master Configuration (I2CMCR)** register. In loopback mode, the SDA and SCL signals from the master and slave modules are tied together.

15.2.5 Command Sequence Flow Charts

This section details the steps required to perform the various I²C transfer types in both master and slave mode.

15.2.5.1 I²C Master Command Sequences

The figures that follow show the command sequences available for the I²C master.

Figure 15-7. Master Single SEND

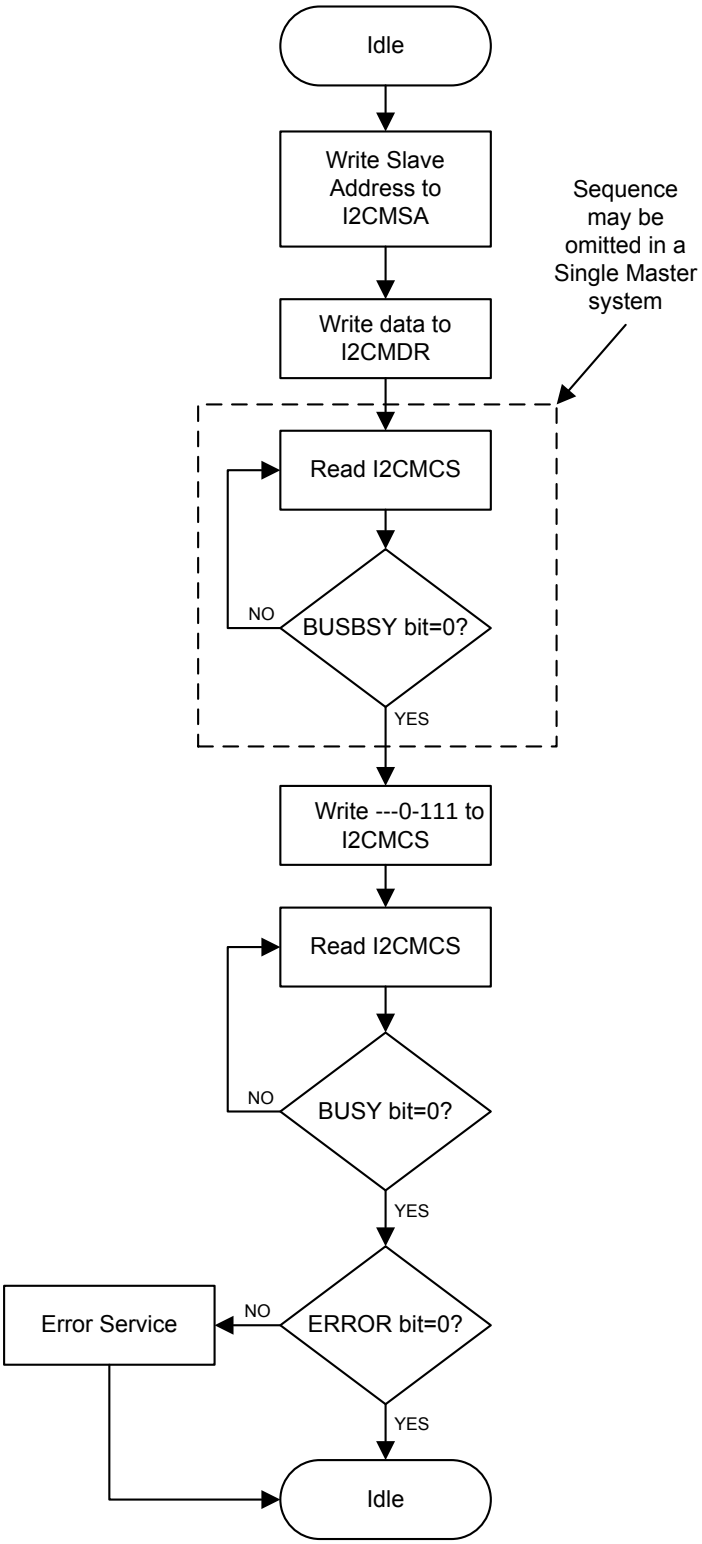

Figure 15-8. Master Single RECEIVE

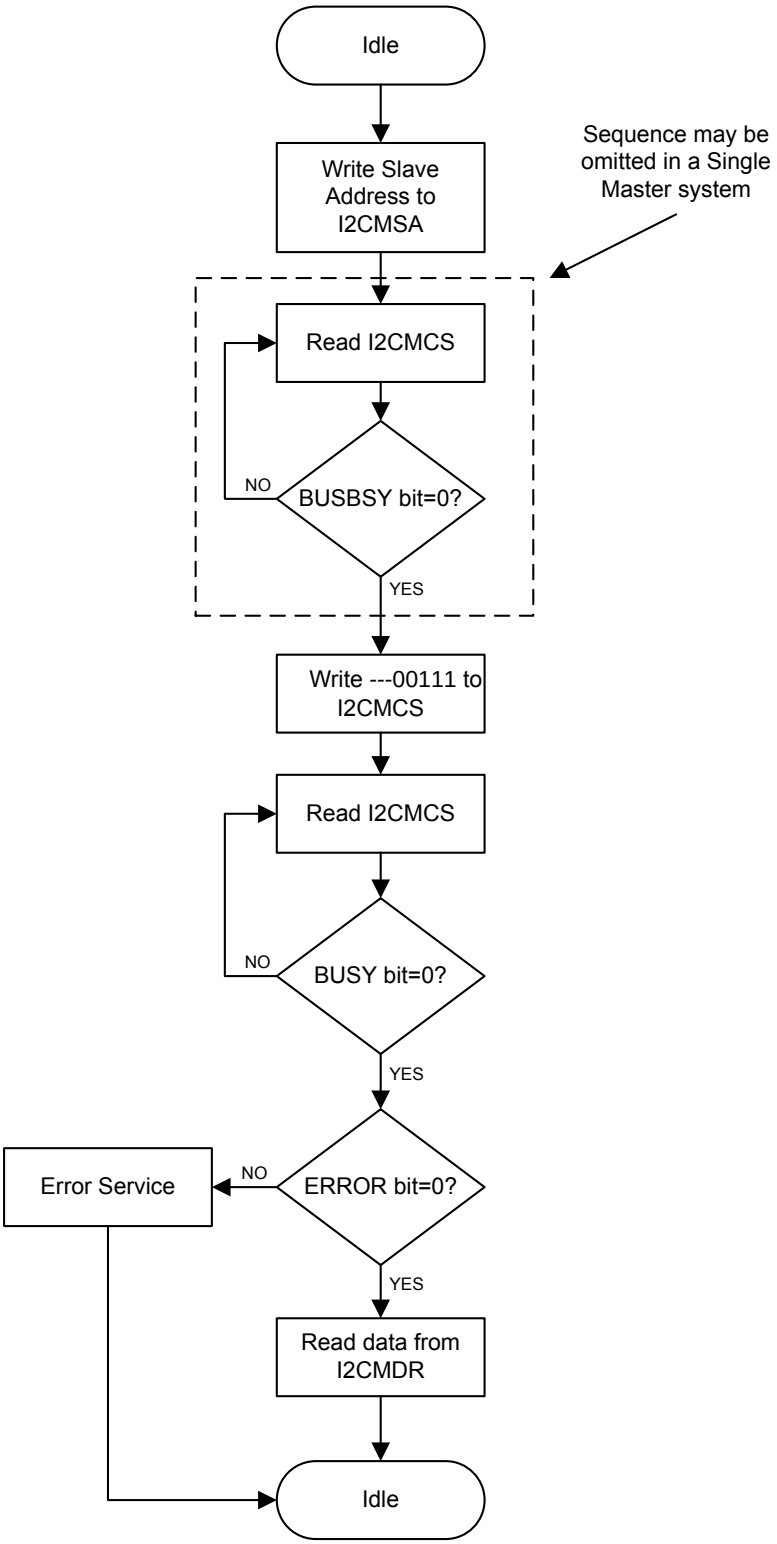

Figure 15-9. Master Burst SEND

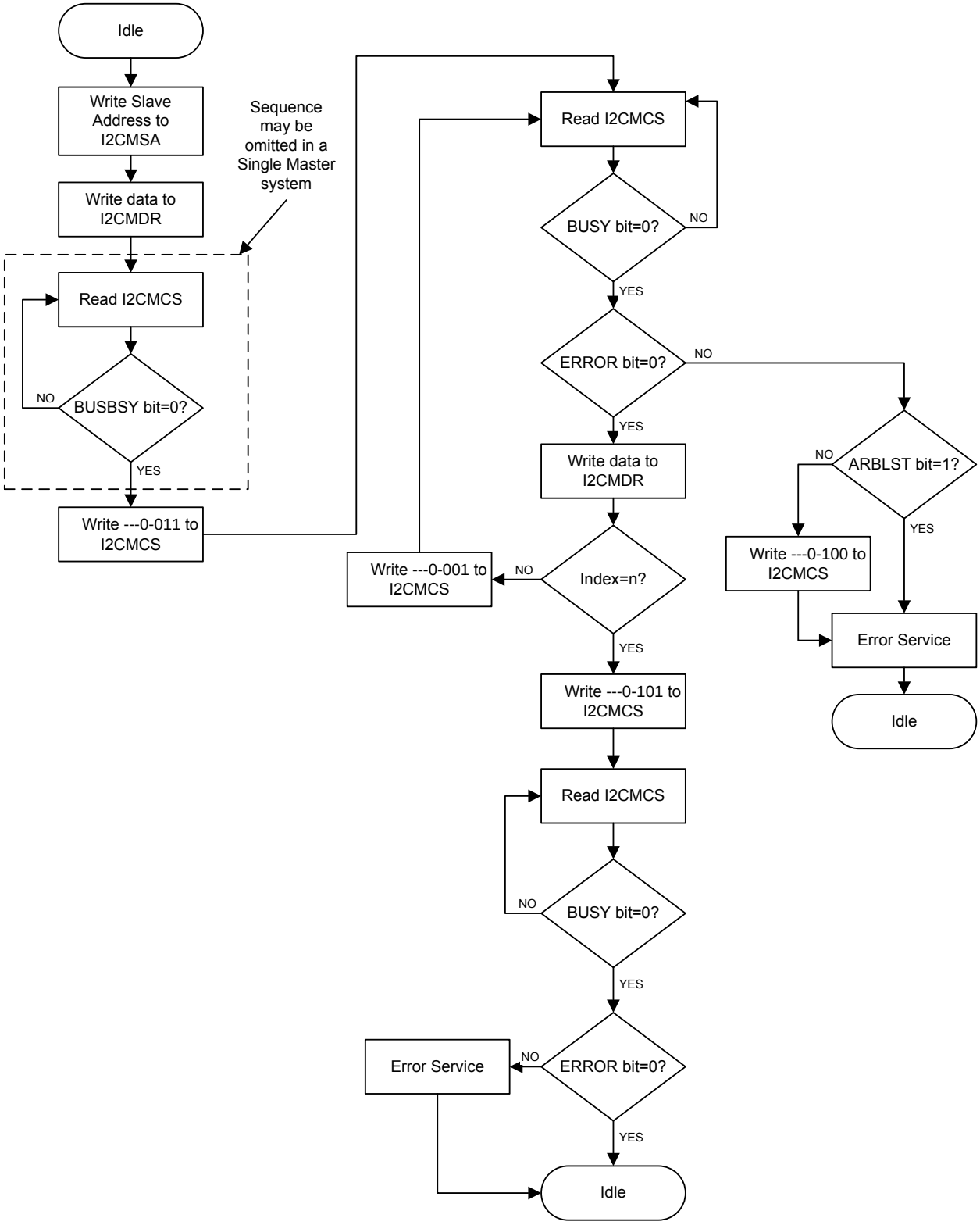

Figure 15-10. Master Burst RECEIVE

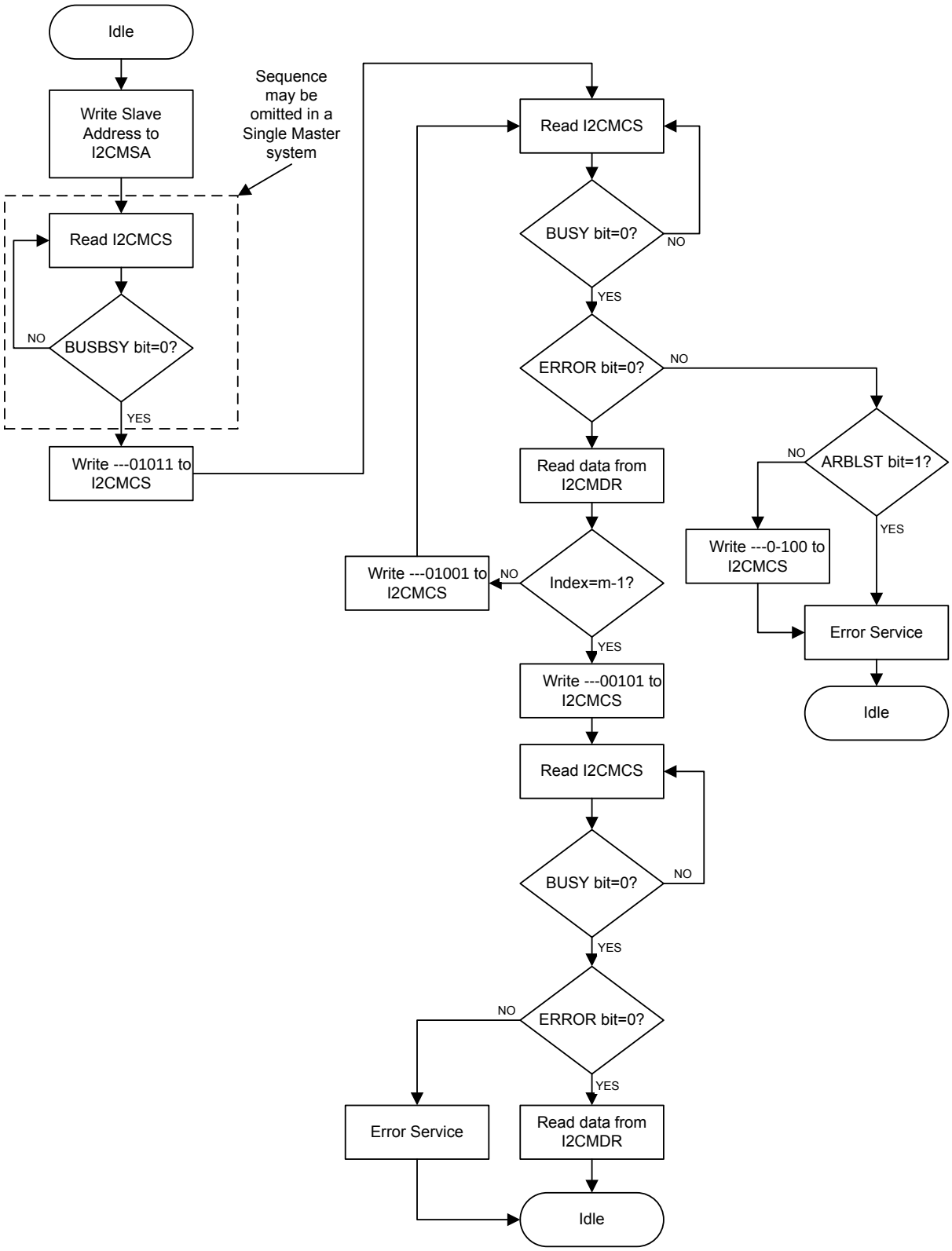

Figure 15-11. Master Burst RECEIVE after Burst SEND

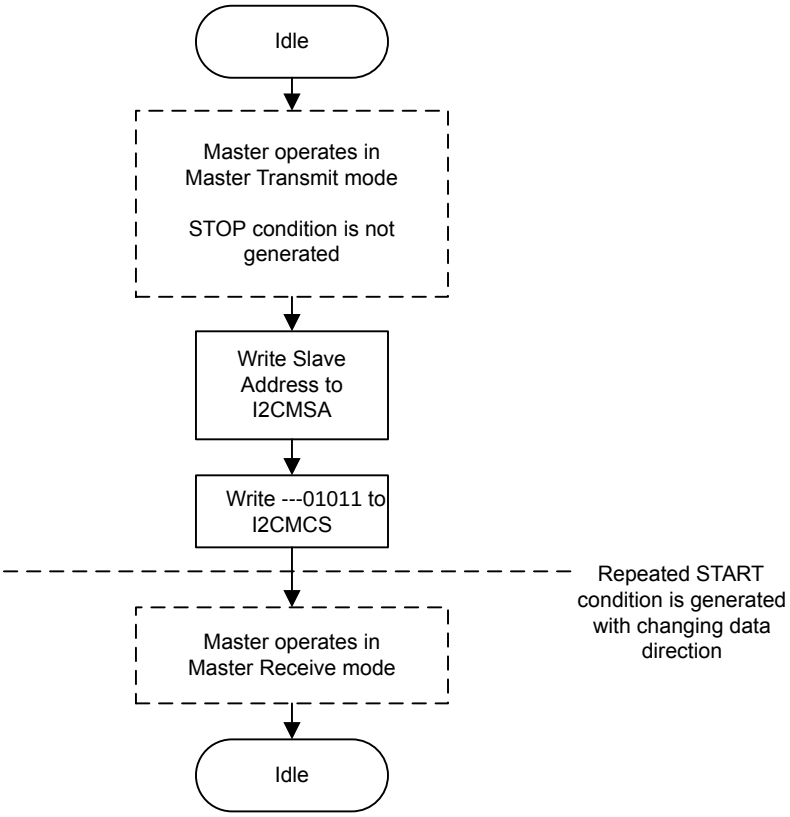

Figure 15-12. Master Burst SEND after Burst RECEIVE

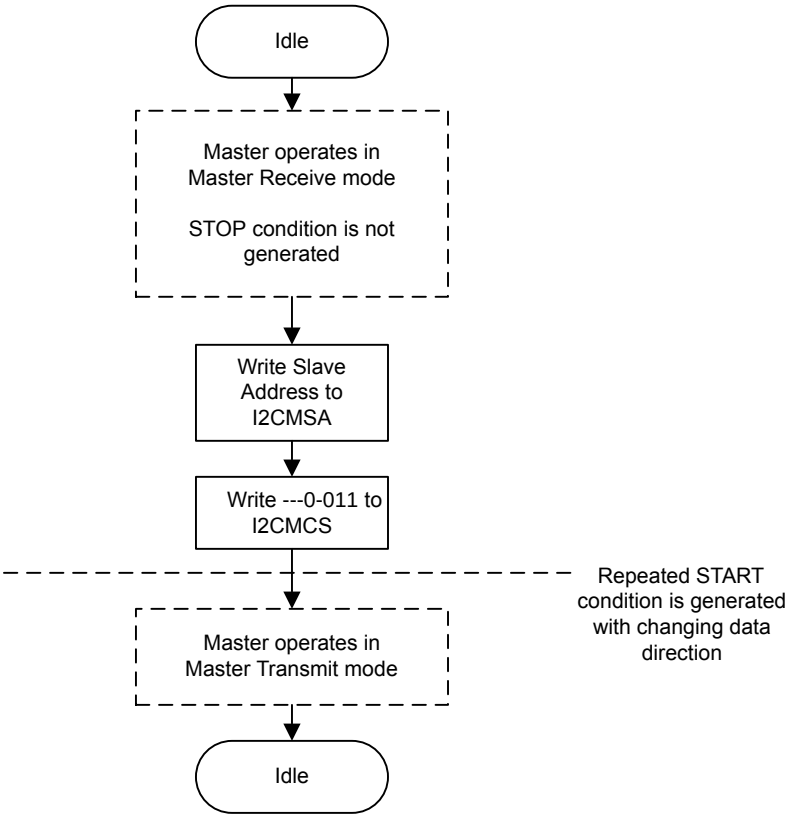

15.2.5.2 I²C Slave Command Sequences

Figure 15-13 on page 408 presents the command sequence available for the I²C slave.

Figure 15-13. Slave Command Sequence

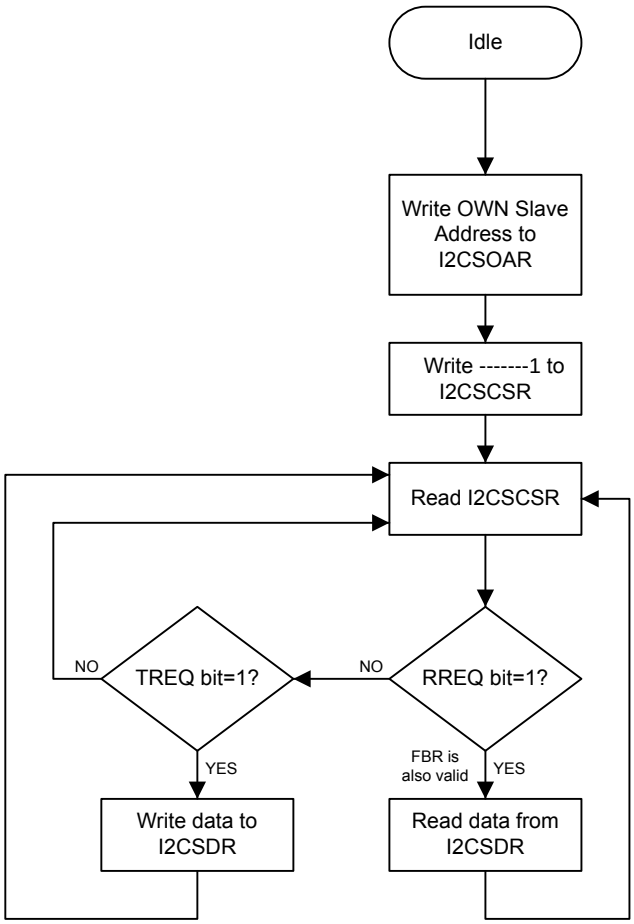

15.3 Initialization and Configuration

The following example shows how to configure the I^{2}C module to send a single byte as a master. This assumes the system clock is 20 MHz.

1. Enable the I^{2}C clock by writing a value of 0x0000.1000 to the **RCGC1** register in the System Control module.
2. Enable the clock to the appropriate GPIO module via the **RCGC2** register in the System Control module.
3. In the GPIO module, enable the appropriate pins for their alternate function using the **GPIOAFSEL** register. Also, be sure to enable the same pins for Open Drain operation.
4. Initialize the I^{2}C Master by writing the **I2CMCR** register with a value of 0x0000.0020.
5. Set the desired SCL clock speed of 100 Kbps by writing the **I2CMTPR** register with the correct value. The value written to the **I2CMTPR** register represents the number of system clock periods in one SCL clock period. The TPR value is determined by the following equation:

```
TPR = (System Clock / (2 * (SCL_LP + SCL_HP) * SCL_CLK)) - 1;
TPR = (20MHz / (2 * (6 + 4) * 100000)) - 1;
TPR = 9
```

Write the **I2CMTPR** register with the value of 0x0000.0009.

6. Specify the slave address of the master and that the next operation will be a Send by writing the **I2CMSA** register with a value of 0x0000.0076. This sets the slave address to 0x3B.
7. Place data (byte) to be sent in the data register by writing the **I2CMDR** register with the desired data.
8. Initiate a single byte send of the data from Master to Slave by writing the **I2CMCS** register with a value of 0x0000.0007 (STOP, START, RUN).
9. Wait until the transmission completes by polling the **I2CMCS** register's BUSBSY bit until it has been cleared.

15.4 Register Map

Table 15-2 on page 409 lists the I^{2}C registers. All addresses given are relative to the I^{2}C base addresses for the master and slave:

- I^{2}C Master 0: 0x4002.0000
- I^{2}C Slave 0: 0x4002.0800

Table 15-2. Inter-Integrated Circuit (I^{2}C) Interface Register Map

Offset	Name	Type	Reset	Description	See page
I^{2}C Master					
0x000	I2CMSA	R/W	0x0000.0000	I2C Master Slave Address	411
0x004	I2CMCS	R/W	0x0000.0000	I2C Master Control/Status	412
0x008	I2CMDR	R/W	0x0000.0000	I2C Master Data	416
0x00C	I2CMTPR	R/W	0x0000.0001	I2C Master Timer Period	417
0x010	I2CMIMR	R/W	0x0000.0000	I2C Master Interrupt Mask	418
0x014	I2CMRIS	RO	0x0000.0000	I2C Master Raw Interrupt Status	419
0x018	I2CMMIS	RO	0x0000.0000	I2C Master Masked Interrupt Status	420
0x01C	I2CMICR	WO	0x0000.0000	I2C Master Interrupt Clear	421
0x020	I2CMCR	R/W	0x0000.0000	I2C Master Configuration	422
I^{2}C Slave					
0x000	I2CSOAR	R/W	0x0000.0000	I2C Slave Own Address	424
0x004	I2CSCSR	RO	0x0000.0000	I2C Slave Control/Status	425
0x008	I2CSDR	R/W	0x0000.0000	I2C Slave Data	427
0x00C	I2CSIMR	R/W	0x0000.0000	I2C Slave Interrupt Mask	428

Offset	Name	Type	Reset	Description	See page
0x010	I2CSRIS	RO	0x0000.0000	I2C Slave Raw Interrupt Status	429
0x014	I2CSMIS	RO	0x0000.0000	I2C Slave Masked Interrupt Status	430
0x018	I2CSICR	WO	0x0000.0000	I2C Slave Interrupt Clear	431

15.5 Register Descriptions (I^2C Master)

The remainder of this section lists and describes the I^2C master registers, in numerical order by address offset. See also “Register Descriptions (I^2C Slave)” on page 423.

Register 1: I²C Master Slave Address (I2CMSA), offset 0x000

This register consists of eight bits: seven address bits (A6-A0), and a Receive/Send bit, which determines if the next operation is a Receive (High), or Send (Low).

I2C Master Slave Address (I2CMSA)

I2C Master 0 base: 0x4002.0000
Offset 0x000
Type R/W, reset 0x0000.0000

	31	30	29	28	27	26	25	24	23	22	21	20	19	18	17	16
	reserved															
Type	RO	RO	RO	RO	RO	RO	RO	RO	RO	RO	RO	RO	RO	RO	RO	RO
Reset	0	0	0	0	0	0	0	0	0	0	0	0	0	0	0	0

	15	14	13	12	11	10	9	8	7	6	5	4	3	2	1	0
	reserved								SA							R/S
Type	RO	RO	RO	RO	RO	RO	RO	RO	R/W	R/W	R/W	R/W	R/W	R/W	R/W	R/W
Reset	0	0	0	0	0	0	0	0	0	0	0	0	0	0	0	0

Bit/Field	Name	Type	Reset	Description
31:8	reserved	RO	0x00	Software should not rely on the value of a reserved bit. To provide compatibility with future products, the value of a reserved bit should be preserved across a read-modify-write operation.
7:1	SA	R/W	0	I²C Slave Address This field specifies bits A6 through A0 of the slave address.
0	R/S	R/W	0	Receive/Send The `R/S` bit specifies if the next operation is a Receive (High) or Send (Low). Value Description 0 Send. 1 Receive.

Register 2: I^2C Master Control/Status (I2CMCS), offset 0x004

This register accesses four control bits when written, and accesses seven status bits when read.

The status register consists of seven bits, which when read determine the state of the I^2C bus controller.

The control register consists of four bits: the `RUN`, `START`, `STOP`, and `ACK` bits. The `START` bit causes the generation of the START, or REPEATED START condition.

The `STOP` bit determines if the cycle stops at the end of the data cycle, or continues on to a burst. To generate a single send cycle, the **I^2C Master Slave Address (I2CMSA)** register is written with the desired address, the `R/S` bit is set to 0, and the Control register is written with `ACK`=X (0 or 1), `STOP=1`, `START=1`, and `RUN=1` to perform the operation and stop. When the operation is completed (or aborted due an error), the interrupt pin becomes active and the data may be read from the **I2CMDR** register. When the I^2C module operates in Master receiver mode, the `ACK` bit must be set normally to logic 1. This causes the I^2C bus controller to send an acknowledge automatically after each byte. This bit must be reset when the I^2C bus controller requires no further data to be sent from the slave transmitter.

Reads

I2C Master Control/Status (I2CMCS)

I2C Master 0 base: 0x4002.0000
Offset 0x004
Type RO, reset 0x0000.0000

	31	30	29	28	27	26	25	24	23	22	21	20	19	18	17	16
	reserved															
Type	RO	RO	RO	RO	RO	RO	RO	RO	RO	RO	RO	RO	RO	RO	RO	RO
Reset	0	0	0	0	0	0	0	0	0	0	0	0	0	0	0	0

	15	14	13	12	11	10	9	8	7	6	5	4	3	2	1	0
	reserved									BUSBSY	IDLE	ARBLST	DATACK	ADRACK	ERROR	BUSY
Type	RO	RO	RO	RO	RO	RO	RO	RO	RO	RO	RO	RO	RO	RO	RO	RO
Reset	0	0	0	0	0	0	0	0	0	0	0	0	0	0	0	0

Bit/Field	Name	Type	Reset	Description
31:7	reserved	RO	0x00	Software should not rely on the value of a reserved bit. To provide compatibility with future products, the value of a reserved bit should be preserved across a read-modify-write operation.
6	BUSBSY	RO	0	Bus Busy This bit specifies the state of the I^2C bus. If set, the bus is busy; otherwise, the bus is idle. The bit changes based on the START and STOP conditions.
5	IDLE	RO	0	I^2C Idle This bit specifies the I^2C controller state. If set, the controller is idle; otherwise the controller is not idle.
4	ARBLST	RO	0	Arbitration Lost This bit specifies the result of bus arbitration. If set, the controller lost arbitration; otherwise, the controller won arbitration.

Bit/Field	Name	Type	Reset	Description
3	DATACK	RO	0	Acknowledge Data This bit specifies the result of the last data operation. If set, the transmitted data was not acknowledged; otherwise, the data was acknowledged.
2	ADRACK	RO	0	Acknowledge Address This bit specifies the result of the last address operation. If set, the transmitted address was not acknowledged; otherwise, the address was acknowledged.
1	ERROR	RO	0	Error This bit specifies the result of the last bus operation. If set, an error occurred on the last operation; otherwise, no error was detected. The error can be from the slave address not being acknowledged, the transmit data not being acknowledged, or because the controller lost arbitration.
0	BUSY	RO	0	I^2C Busy This bit specifies the state of the controller. If set, the controller is busy; otherwise, the controller is idle. When the BUSY bit is set, the other status bits are not valid.

Writes

I2C Master Control/Status (I2CMCS)

I2C Master 0 base: 0x4002.0000
Offset 0x004
Type WO, reset 0x0000.0000

	31	30	29	28	27	26	25	24	23	22	21	20	19	18	17	16
	reserved															
Type	WO	WO	WO	WO	WO	WO	WO	WO	WO	WO	WO	WO	WO	WO	WO	WO
Reset	0	0	0	0	0	0	0	0	0	0	0	0	0	0	0	0

	15	14	13	12	11	10	9	8	7	6	5	4	3	2	1	0
	reserved												ACK	STOP	START	RUN
Type	WO	WO	WO	WO	WO	WO	WO	WO	WO	WO	WO	WO	WO	WO	WO	WO
Reset	0	0	0	0	0	0	0	0	0	0	0	0	0	0	0	0

Bit/Field	Name	Type	Reset	Description
31:4	reserved	WO	0x00	Software should not rely on the value of a reserved bit. To provide compatibility with future products, the value of a reserved bit should be preserved across a read-modify-write operation.
3	ACK	WO	0	Data Acknowledge Enable When set, causes received data byte to be acknowledged automatically by the master. See field decoding in Table 15-3 on page 414.
2	STOP	WO	0	Generate STOP When set, causes the generation of the STOP condition. See field decoding in Table 15-3 on page 414.

Bit/Field	Name	Type	Reset	Description
1	START	WO	0	Generate START When set, causes the generation of a START or repeated START condition. See field decoding in Table 15-3 on page 414.
0	RUN	WO	0	I^2C Master Enable When set, allows the master to send or receive data. See field decoding in Table 15-3 on page 414.

Table 15-3. Write Field Decoding for I2CMCS[3:0] Field (Sheet 1 of 3)

Current State	I2CMSA[0]	I2CMCS[3:0]				Description
	R/S	ACK	STOP	START	RUN	
Idle	0	X[a]	0	1	1	START condition followed by SEND (master goes to the Master Transmit state).
	0	X	1	1	1	START condition followed by a SEND and STOP condition (master remains in Idle state).
	1	0	0	1	1	START condition followed by RECEIVE operation with negative ACK (master goes to the Master Receive state).
	1	0	1	1	1	START condition followed by RECEIVE and STOP condition (master remains in Idle state).
	1	1	0	1	1	START condition followed by RECEIVE (master goes to the Master Receive state).
	1	1	1	1	1	Illegal.
	All other combinations not listed are non-operations.					NOP.
Master Transmit	X	X	0	0	1	SEND operation (master remains in Master Transmit state).
	X	X	1	0	0	STOP condition (master goes to Idle state).
	X	X	1	0	1	SEND followed by STOP condition (master goes to Idle state).
	0	X	0	1	1	Repeated START condition followed by a SEND (master remains in Master Transmit state).
	0	X	1	1	1	Repeated START condition followed by SEND and STOP condition (master goes to Idle state).
	1	0	0	1	1	Repeated START condition followed by a RECEIVE operation with a negative ACK (master goes to Master Receive state).
	1	0	1	1	1	Repeated START condition followed by a SEND and STOP condition (master goes to Idle state).
	1	1	0	1	1	Repeated START condition followed by RECEIVE (master goes to Master Receive state).
	1	1	1	1	1	Illegal.
	All other combinations not listed are non-operations.					NOP.

Current State	I2CMSA[0]	I2CMCS[3:0]				Description
	R/S	ACK	STOP	START	RUN	
Master Receive	X	0	0	0	1	RECEIVE operation with negative ACK (master remains in Master Receive state).
	X	X	1	0	0	STOP condition (master goes to Idle state).[b]
	X	0	1	0	1	RECEIVE followed by STOP condition (master goes to Idle state).
	X	1	0	0	1	RECEIVE operation (master remains in Master Receive state).
	X	1	1	0	1	Illegal.
	1	0	0	1	1	Repeated START condition followed by RECEIVE operation with a negative ACK (master remains in Master Receive state).
	1	0	1	1	1	Repeated START condition followed by RECEIVE and STOP condition (master goes to Idle state).
	1	1	0	1	1	Repeated START condition followed by RECEIVE (master remains in Master Receive state).
	0	X	0	1	1	Repeated START condition followed by SEND (master goes to Master Transmit state).
	0	X	1	1	1	Repeated START condition followed by SEND and STOP condition (master goes to Idle state).
	All other combinations not listed are non-operations.					NOP.

a. An X in a table cell indicates the bit can be 0 or 1.

b. In Master Receive mode, a STOP condition should be generated only after a Data Negative Acknowledge executed by the master or an Address Negative Acknowledge executed by the slave.

Register 3: I^2C Master Data (I2CMDR), offset 0x008

This register contains the data to be transmitted when in the Master Transmit state, and the data received when in the Master Receive state.

I2C Master Data (I2CMDR)

I2C Master 0 base: 0x4002.0000
Offset 0x008
Type R/W, reset 0x0000.0000

	31	30	29	28	27	26	25	24	23	22	21	20	19	18	17	16
	reserved															
Type	RO	RO	RO	RO	RO	RO	RO	RO	RO	RO	RO	RO	RO	RO	RO	RO
Reset	0	0	0	0	0	0	0	0	0	0	0	0	0	0	0	0

	15	14	13	12	11	10	9	8	7	6	5	4	3	2	1	0
	reserved								DATA							
Type	RO	RO	RO	RO	RO	RO	RO	RO	R/W	R/W	R/W	R/W	R/W	R/W	R/W	R/W
Reset	0	0	0	0	0	0	0	0	0	0	0	0	0	0	0	0

Bit/Field	Name	Type	Reset	Description
31:8	reserved	RO	0x00	Software should not rely on the value of a reserved bit. To provide compatibility with future products, the value of a reserved bit should be preserved across a read-modify-write operation.
7:0	DATA	R/W	0x00	Data Transferred Data transferred during transaction.

Register 4: I^{2}C Master Timer Period (I2CMTPR), offset 0x00C

This register specifies the period of the SCL clock.

I2C Master Timer Period (I2CMTPR)

I2C Master 0 base: 0x4002.0000
Offset 0x00C
Type R/W, reset 0x0000.0001

	31	30	29	28	27	26	25	24	23	22	21	20	19	18	17	16
	reserved															
Type	RO	RO	RO	RO	RO	RO	RO	RO	RO	RO	RO	RO	RO	RO	RO	RO
Reset	0	0	0	0	0	0	0	0	0	0	0	0	0	0	0	0

	15	14	13	12	11	10	9	8	7	6	5	4	3	2	1	0
	reserved								TPR							
Type	RO	RO	RO	RO	RO	RO	RO	RO	R/W	R/W	R/W	R/W	R/W	R/W	R/W	R/W
Reset	0	0	0	0	0	0	0	0	0	0	0	0	0	0	0	1

Bit/Field	Name	Type	Reset	Description
31:8	reserved	RO	0x00	Software should not rely on the value of a reserved bit. To provide compatibility with future products, the value of a reserved bit should be preserved across a read-modify-write operation.
7:0	TPR	R/W	0x1	SCL Clock Period This field specifies the period of the SCL clock. `SCL_PRD = 2*(1 + TPR)*(SCL_LP + SCL_HP)*CLK_PRD` where: `SCL_PRD` is the SCL line period (I^{2}C clock). `TPR` is the Timer Period register value (range of 1 to 255). `SCL_LP` is the SCL Low period (fixed at 6). `SCL_HP` is the SCL High period (fixed at 4).

Register 5: I^2C Master Interrupt Mask (I2CMIMR), offset 0x010

This register controls whether a raw interrupt is promoted to a controller interrupt.

I2C Master Interrupt Mask (I2CMIMR)

I2C Master 0 base: 0x4002.0000
Offset 0x010
Type R/W, reset 0x0000.0000

	31	30	29	28	27	26	25	24	23	22	21	20	19	18	17	16
	reserved															
Type	RO	RO	RO	RO	RO	RO	RO	RO	RO	RO	RO	RO	RO	RO	RO	RO
Reset	0	0	0	0	0	0	0	0	0	0	0	0	0	0	0	0

	15	14	13	12	11	10	9	8	7	6	5	4	3	2	1	0
	reserved															IM
Type	RO	RO	RO	RO	RO	RO	RO	RO	RO	RO	RO	RO	RO	RO	RO	R/W
Reset	0	0	0	0	0	0	0	0	0	0	0	0	0	0	0	0

Bit/Field	Name	Type	Reset	Description
31:1	reserved	RO	0x00	Software should not rely on the value of a reserved bit. To provide compatibility with future products, the value of a reserved bit should be preserved across a read-modify-write operation.
0	IM	R/W	0	Interrupt Mask This bit controls whether a raw interrupt is promoted to a controller interrupt. If set, the interrupt is not masked and the interrupt is promoted; otherwise, the interrupt is masked.

Register 6: I^{2}C Master Raw Interrupt Status (I2CMRIS), offset 0x014

This register specifies whether an interrupt is pending.

I2C Master Raw Interrupt Status (I2CMRIS)

I2C Master 0 base: 0x4002.0000
Offset 0x014
Type RO, reset 0x0000.0000

	31	30	29	28	27	26	25	24	23	22	21	20	19	18	17	16
	reserved															
Type	RO	RO	RO	RO	RO	RO	RO	RO	RO	RO	RO	RO	RO	RO	RO	RO
Reset	0	0	0	0	0	0	0	0	0	0	0	0	0	0	0	0

	15	14	13	12	11	10	9	8	7	6	5	4	3	2	1	0
	reserved															RIS
Type	RO	RO	RO	RO	RO	RO	RO	RO	RO	RO	RO	RO	RO	RO	RO	RO
Reset	0	0	0	0	0	0	0	0	0	0	0	0	0	0	0	0

Bit/Field	Name	Type	Reset	Description
31:1	reserved	RO	0x00	Software should not rely on the value of a reserved bit. To provide compatibility with future products, the value of a reserved bit should be preserved across a read-modify-write operation.
0	RIS	RO	0	Raw Interrupt Status This bit specifies the raw interrupt state (prior to masking) of the I^{2}C master block. If set, an interrupt is pending; otherwise, an interrupt is not pending.

Register 7: I^2C Master Masked Interrupt Status (I2CMMIS), offset 0x018

This register specifies whether an interrupt was signaled.

I2C Master Masked Interrupt Status (I2CMMIS)

I2C Master 0 base: 0x4002.0000
Offset 0x018
Type RO, reset 0x0000.0000

	31	30	29	28	27	26	25	24	23	22	21	20	19	18	17	16
	reserved															
Type	RO	RO	RO	RO	RO	RO	RO	RO	RO	RO	RO	RO	RO	RO	RO	RO
Reset	0	0	0	0	0	0	0	0	0	0	0	0	0	0	0	0

	15	14	13	12	11	10	9	8	7	6	5	4	3	2	1	0
	reserved															MIS
Type	RO	RO	RO	RO	RO	RO	RO	RO	RO	RO	RO	RO	RO	RO	RO	RO
Reset	0	0	0	0	0	0	0	0	0	0	0	0	0	0	0	0

Bit/Field	Name	Type	Reset	Description
31:1	reserved	RO	0x00	Software should not rely on the value of a reserved bit. To provide compatibility with future products, the value of a reserved bit should be preserved across a read-modify-write operation.
0	MIS	RO	0	Masked Interrupt Status This bit specifies the raw interrupt state (after masking) of the I^2C master block. If set, an interrupt was signaled; otherwise, an interrupt has not been generated since the bit was last cleared.

Register 8: I²C Master Interrupt Clear (I2CMICR), offset 0x01C

This register clears the raw interrupt.

I2C Master Interrupt Clear (I2CMICR)

I2C Master 0 base: 0x4002.0000
Offset 0x01C
Type WO, reset 0x0000.0000

	31	30	29	28	27	26	25	24	23	22	21	20	19	18	17	16
	reserved															
Type	RO	RO	RO	RO	RO	RO	RO	RO	RO	RO	RO	RO	RO	RO	RO	RO
Reset	0	0	0	0	0	0	0	0	0	0	0	0	0	0	0	0

	15	14	13	12	11	10	9	8	7	6	5	4	3	2	1	0
	reserved															IC
Type	RO	RO	RO	RO	RO	RO	RO	RO	RO	RO	RO	RO	RO	RO	RO	WO
Reset	0	0	0	0	0	0	0	0	0	0	0	0	0	0	0	0

Bit/Field	Name	Type	Reset	Description
31:1	reserved	RO	0x00	Software should not rely on the value of a reserved bit. To provide compatibility with future products, the value of a reserved bit should be preserved across a read-modify-write operation.
0	IC	WO	0	Interrupt Clear This bit controls the clearing of the raw interrupt. A write of 1 clears the interrupt; otherwise, a write of 0 has no affect on the interrupt state. A read of this register returns no meaningful data.

Register 9: I^2C Master Configuration (I2CMCR), offset 0x020

This register configures the mode (Master or Slave) and sets the interface for test mode loopback.

I2C Master Configuration (I2CMCR)

I2C Master 0 base: 0x4002.0000
Offset 0x020
Type R/W, reset 0x0000.0000

	31	30	29	28	27	26	25	24	23	22	21	20	19	18	17	16
	reserved															
Type	RO	RO	RO	RO	RO	RO	RO	RO	RO	RO	RO	RO	RO	RO	RO	RO
Reset	0	0	0	0	0	0	0	0	0	0	0	0	0	0	0	0

	15	14	13	12	11	10	9	8	7	6	5	4	3	2	1	0
	reserved										SFE	MFE	reserved			LPBK
Type	RO	RO	RO	RO	RO	RO	RO	RO	RO	RO	R/W	R/W	RO	RO	RO	R/W
Reset	0	0	0	0	0	0	0	0	0	0	0	0	0	0	0	0

Bit/Field	Name	Type	Reset	Description
31:6	reserved	RO	0x00	Software should not rely on the value of a reserved bit. To provide compatibility with future products, the value of a reserved bit should be preserved across a read-modify-write operation.
5	SFE	R/W	0	I^2C Slave Function Enable This bit specifies whether the interface may operate in Slave mode. If set, Slave mode is enabled; otherwise, Slave mode is disabled.
4	MFE	R/W	0	I^2C Master Function Enable This bit specifies whether the interface may operate in Master mode. If set, Master mode is enabled; otherwise, Master mode is disabled and the interface clock is disabled.
3:1	reserved	RO	0x00	Software should not rely on the value of a reserved bit. To provide compatibility with future products, the value of a reserved bit should be preserved across a read-modify-write operation.
0	LPBK	R/W	0	I^2C Loopback This bit specifies whether the interface is operating normally or in Loopback mode. If set, the device is put in a test mode loopback configuration; otherwise, the device operates normally.

15.6 Register Descriptions (I^2C Slave)

The remainder of this section lists and describes the I^2C slave registers, in numerical order by address offset. See also “Register Descriptions (I^2C Master)” on page 410.

Register 10: I^2C Slave Own Address (I2CSOAR), offset 0x000

This register consists of seven address bits that identify the Stellaris® I^2C device on the I^2C bus.

I2C Slave Own Address (I2CSOAR)

I2C Slave 0 base: 0x4002.0800
Offset 0x000
Type R/W, reset 0x0000.0000

	31	30	29	28	27	26	25	24	23	22	21	20	19	18	17	16
	reserved															
Type	RO	RO	RO	RO	RO	RO	RO	RO	RO	RO	RO	RO	RO	RO	RO	RO
Reset	0	0	0	0	0	0	0	0	0	0	0	0	0	0	0	0

	15	14	13	12	11	10	9	8	7	6	5	4	3	2	1	0
	reserved									OAR						
Type	RO	RO	RO	RO	RO	RO	RO	RO	RO	R/W	R/W	R/W	R/W	R/W	R/W	R/W
Reset	0	0	0	0	0	0	0	0	0	0	0	0	0	0	0	0

Bit/Field	Name	Type	Reset	Description
31:7	reserved	RO	0x00	Software should not rely on the value of a reserved bit. To provide compatibility with future products, the value of a reserved bit should be preserved across a read-modify-write operation.
6:0	OAR	R/W	0x00	I^2C Slave Own Address This field specifies bits A6 through A0 of the slave address.

Register 11: I²C Slave Control/Status (I2CSCSR), offset 0x004

This register accesses one control bit when written, and three status bits when read.

The read-only Status register consists of three bits: the `FBR`, `RREQ`, and `TREQ` bits. The `First Byte Received (FBR)` bit is set only after the Stellaris® device detects its own slave address and receives the first data byte from the I²C master. The `Receive Request (RREQ)` bit indicates that the Stellaris® I²C device has received a data byte from an I²C master. Read one data byte from the **I²C Slave Data (I2CSDR)** register to clear the `RREQ` bit. The `Transmit Request (TREQ)` bit indicates that the Stellaris® I²C device is addressed as a Slave Transmitter. Write one data byte into the **I²C Slave Data (I2CSDR)** register to clear the `TREQ` bit.

The write-only Control register consists of one bit: the `DA` bit. The `DA` bit enables and disables the Stellaris® I²C slave operation.

Reads

I2C Slave Control/Status (I2CSCSR)

I2C Slave 0 base: 0x4002.0800
Offset 0x004
Type RO, reset 0x0000.0000

	31	30	29	28	27	26	25	24	23	22	21	20	19	18	17	16
	reserved															
Type	RO	RO	RO	RO	RO	RO	RO	RO	RO	RO	RO	RO	RO	RO	RO	RO
Reset	0	0	0	0	0	0	0	0	0	0	0	0	0	0	0	0

	15	14	13	12	11	10	9	8	7	6	5	4	3	2	1	0
	reserved													FBR	TREQ	RREQ
Type	RO	RO	RO	RO	RO	RO	RO	RO	RO	RO	RO	RO	RO	RO	RO	RO
Reset	0	0	0	0	0	0	0	0	0	0	0	0	0	0	0	0

Bit/Field	Name	Type	Reset	Description
31:3	reserved	RO	0x00	Software should not rely on the value of a reserved bit. To provide compatibility with future products, the value of a reserved bit should be preserved across a read-modify-write operation.
2	FBR	RO	0	First Byte Received Indicates that the first byte following the slave's own address is received. This bit is only valid when the `RREQ` bit is set, and is automatically cleared when data has been read from the **I2CSDR** register. **Note:** This bit is not used for slave transmit operations.
1	TREQ	RO	0	Transmit Request This bit specifies the state of the I²C slave with regards to outstanding transmit requests. If set, the I²C unit has been addressed as a slave transmitter and uses clock stretching to delay the master until data has been written to the **I2CSDR** register. Otherwise, there is no outstanding transmit request.

Bit/Field	Name	Type	Reset	Description
0	RREQ	RO	0	Receive Request This bit specifies the status of the I^2C slave with regards to outstanding receive requests. If set, the I^2C unit has outstanding receive data from the I^2C master and uses clock stretching to delay the master until the data has been read from the **I2CSDR** register. Otherwise, no receive data is outstanding.

Writes

I2C Slave Control/Status (I2CSCSR)

I2C Slave 0 base: 0x4002.0800
Offset 0x004
Type WO, reset 0x0000.0000

	31	30	29	28	27	26	25	24	23	22	21	20	19	18	17	16
	reserved															
Type	RO	RO	RO	RO	RO	RO	RO	RO	RO	RO	RO	RO	RO	RO	RO	RO
Reset	0	0	0	0	0	0	0	0	0	0	0	0	0	0	0	0

	15	14	13	12	11	10	9	8	7	6	5	4	3	2	1	0
	reserved															DA
Type	RO	RO	RO	RO	RO	RO	RO	RO	RO	RO	RO	RO	RO	RO	RO	WO
Reset	0	0	0	0	0	0	0	0	0	0	0	0	0	0	0	0

Bit/Field	Name	Type	Reset	Description
31:1	reserved	RO	0x00	Software should not rely on the value of a reserved bit. To provide compatibility with future products, the value of a reserved bit should be preserved across a read-modify-write operation.
0	DA	WO	0	Device Active Value Description 0 Disables the I^2C slave operation. 1 Enables the I^2C slave operation.

Register 12: I^{2}C Slave Data (I2CSDR), offset 0x008

This register contains the data to be transmitted when in the Slave Transmit state, and the data received when in the Slave Receive state.

I2C Slave Data (I2CSDR)

I2C Slave 0 base: 0x4002.0800
Offset 0x008
Type R/W, reset 0x0000.0000

	31	30	29	28	27	26	25	24	23	22	21	20	19	18	17	16
	reserved															
Type	RO	RO	RO	RO	RO	RO	RO	RO	RO	RO	RO	RO	RO	RO	RO	RO
Reset	0	0	0	0	0	0	0	0	0	0	0	0	0	0	0	0

	15	14	13	12	11	10	9	8	7	6	5	4	3	2	1	0
	reserved								DATA							
Type	RO	RO	RO	RO	RO	RO	RO	RO	R/W	R/W	R/W	R/W	R/W	R/W	R/W	R/W
Reset	0	0	0	0	0	0	0	0	0	0	0	0	0	0	0	0

Bit/Field	Name	Type	Reset	Description
31:8	reserved	RO	0x00	Software should not rely on the value of a reserved bit. To provide compatibility with future products, the value of a reserved bit should be preserved across a read-modify-write operation.
7:0	DATA	R/W	0x0	Data for Transfer This field contains the data for transfer during a slave receive or transmit operation.

Register 13: I^2C Slave Interrupt Mask (I2CSIMR), offset 0x00C

This register controls whether a raw interrupt is promoted to a controller interrupt.

I2C Slave Interrupt Mask (I2CSIMR)

I2C Slave 0 base: 0x4002.0800
Offset 0x00C
Type R/W, reset 0x0000.0000

	31	30	29	28	27	26	25	24	23	22	21	20	19	18	17	16
	reserved															
Type	RO	RO	RO	RO	RO	RO	RO	RO	RO	RO	RO	RO	RO	RO	RO	RO
Reset	0	0	0	0	0	0	0	0	0	0	0	0	0	0	0	0

	15	14	13	12	11	10	9	8	7	6	5	4	3	2	1	0
	reserved															DATAIM
Type	RO	RO	RO	RO	RO	RO	RO	RO	RO	RO	RO	RO	RO	RO	RO	R/W
Reset	0	0	0	0	0	0	0	0	0	0	0	0	0	0	0	0

Bit/Field	Name	Type	Reset	Description
31:1	reserved	RO	0x00	Software should not rely on the value of a reserved bit. To provide compatibility with future products, the value of a reserved bit should be preserved across a read-modify-write operation.
0	DATAIM	R/W	0	Data Interrupt Mask This bit controls whether the raw interrupt for data received and data requested is promoted to a controller interrupt. If set, the interrupt is not masked and the interrupt is promoted; otherwise, the interrupt is masked.

Register 14: I^{2}C Slave Raw Interrupt Status (I2CSRIS), offset 0x010

This register specifies whether an interrupt is pending.

I2C Slave Raw Interrupt Status (I2CSRIS)

I2C Slave 0 base: 0x4002.0800
Offset 0x010
Type RO, reset 0x0000.0000

	31	30	29	28	27	26	25	24	23	22	21	20	19	18	17	16
	reserved															
Type	RO	RO	RO	RO	RO	RO	RO	RO	RO	RO	RO	RO	RO	RO	RO	RO
Reset	0	0	0	0	0	0	0	0	0	0	0	0	0	0	0	0

	15	14	13	12	11	10	9	8	7	6	5	4	3	2	1	0
	reserved															DATARIS
Type	RO	RO	RO	RO	RO	RO	RO	RO	RO	RO	RO	RO	RO	RO	RO	RO
Reset	0	0	0	0	0	0	0	0	0	0	0	0	0	0	0	0

Bit/Field	Name	Type	Reset	Description
31:1	reserved	RO	0x00	Software should not rely on the value of a reserved bit. To provide compatibility with future products, the value of a reserved bit should be preserved across a read-modify-write operation.
0	DATARIS	RO	0	Data Raw Interrupt Status This bit specifies the raw interrupt state for data received and data requested (prior to masking) of the I^{2}C slave block. If set, an interrupt is pending; otherwise, an interrupt is not pending.

Register 15: I^2C Slave Masked Interrupt Status (I2CSMIS), offset 0x014

This register specifies whether an interrupt was signaled.

I2C Slave Masked Interrupt Status (I2CSMIS)

I2C Slave 0 base: 0x4002.0800
Offset 0x014
Type RO, reset 0x0000.0000

	31	30	29	28	27	26	25	24	23	22	21	20	19	18	17	16
	reserved															
Type	RO	RO	RO	RO	RO	RO	RO	RO	RO	RO	RO	RO	RO	RO	RO	RO
Reset	0	0	0	0	0	0	0	0	0	0	0	0	0	0	0	0

	15	14	13	12	11	10	9	8	7	6	5	4	3	2	1	0
	reserved															DATAMIS
Type	RO	RO	RO	RO	RO	RO	RO	RO	RO	RO	RO	RO	RO	RO	RO	RO
Reset	0	0	0	0	0	0	0	0	0	0	0	0	0	0	0	0

Bit/Field	Name	Type	Reset	Description
31:1	reserved	RO	0x00	Software should not rely on the value of a reserved bit. To provide compatibility with future products, the value of a reserved bit should be preserved across a read-modify-write operation.
0	DATAMIS	RO	0	Data Masked Interrupt Status This bit specifies the interrupt state for data received and data requested (after masking) of the I^2C slave block. If set, an interrupt was signaled; otherwise, an interrupt has not been generated since the bit was last cleared.

Register 16: I²C Slave Interrupt Clear (I2CSICR), offset 0x018

This register clears the raw interrupt. A read of this register returns no meaningful data.

I2C Slave Interrupt Clear (I2CSICR)

I2C Slave 0 base: 0x4002.0800
Offset 0x018
Type WO, reset 0x0000.0000

	31	30	29	28	27	26	25	24	23	22	21	20	19	18	17	16
	reserved															
Type	RO	RO	RO	RO	RO	RO	RO	RO	RO	RO	RO	RO	RO	RO	RO	RO
Reset	0	0	0	0	0	0	0	0	0	0	0	0	0	0	0	0

	15	14	13	12	11	10	9	8	7	6	5	4	3	2	1	0
	reserved															DATAIC
Type	RO	RO	RO	RO	RO	RO	RO	RO	RO	RO	RO	RO	RO	RO	RO	WO
Reset	0	0	0	0	0	0	0	0	0	0	0	0	0	0	0	0

Bit/Field	Name	Type	Reset	Description
31:1	reserved	RO	0x00	Software should not rely on the value of a reserved bit. To provide compatibility with future products, the value of a reserved bit should be preserved across a read-modify-write operation.
0	DATAIC	WO	0	Data Interrupt Clear This bit controls the clearing of the raw interrupt for data received and data requested. When set, it clears the `DATARIS` interrupt bit; otherwise, it has no effect on the `DATARIS` bit value.

16 Controller Area Network (CAN) Module

Controller Area Network (CAN) is a multicast, shared serial bus standard for connecting electronic control units (ECUs). CAN was specifically designed to be robust in electromagnetically-noisy environments and can utilize a differential balanced line like RS-485 or a more robust twisted-pair wire. Originally created for automotive purposes, it is also used in many embedded control applications (such as industrial and medical). Bit rates up to 1Mbps are possible at network lengths less than 40 meters. Decreased bit rates allow longer network distances (for example, 125 Kbps at 500 meters).

The Stellaris® CAN controller supports the following features:

- CAN protocol version 2.0 part A/B
- Bit rates up to 1 Mbps
- 32 message objects with individual identifier masks
- Maskable interrupt
- Disable Automatic Retransmission mode for Time-Triggered CAN (TTCAN) applications
- Programmable Loopback mode for self-test operation
- Programmable FIFO mode enables storage of multiple message objects
- Gluelessly attaches to an external CAN interface through the `CANnTX` and `CANnRX` signals

16.1 Block Diagram

Figure 16-1. CAN Controller Block Diagram

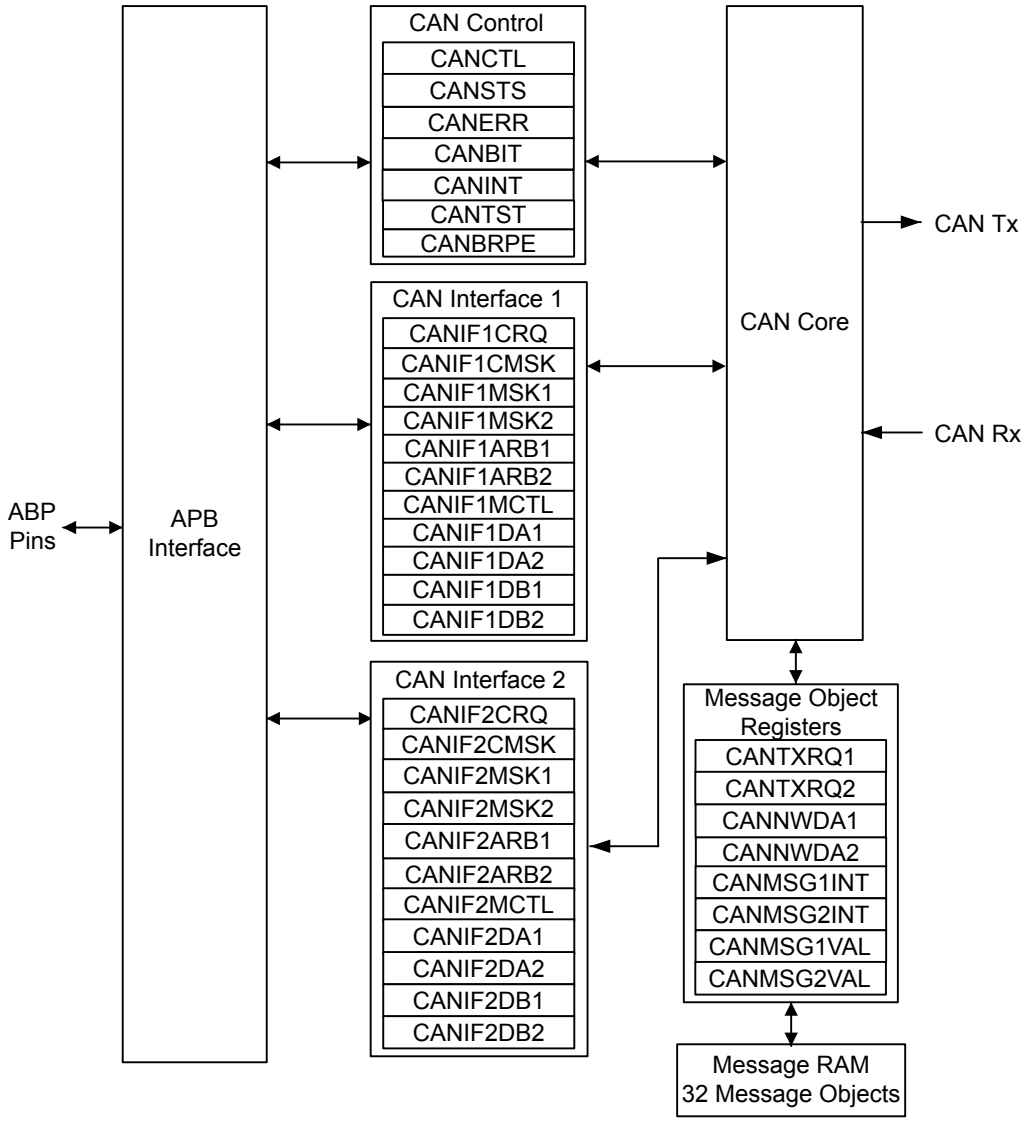

16.2 Functional Description

The Stellaris® CAN controller conforms to the CAN protocol version 2.0 (parts A and B). Message transfers that include data, remote, error, and overload frames with an 11-bit identifier (standard) or a 29-bit identifier (extended) are supported. Transfer rates can be programmed up to 1 Mbps.

The CAN module consists of three major parts:

- CAN protocol controller and message handler
- Message memory
- CAN register interface

A data frame contains data for transmission, whereas a remote frame contains no data and is used to request the transmission of a specific message object. The CAN data/remote frame is constructed as shown in Figure 16-2 on page 434.

Figure 16-2. CAN Data/Remote Frame

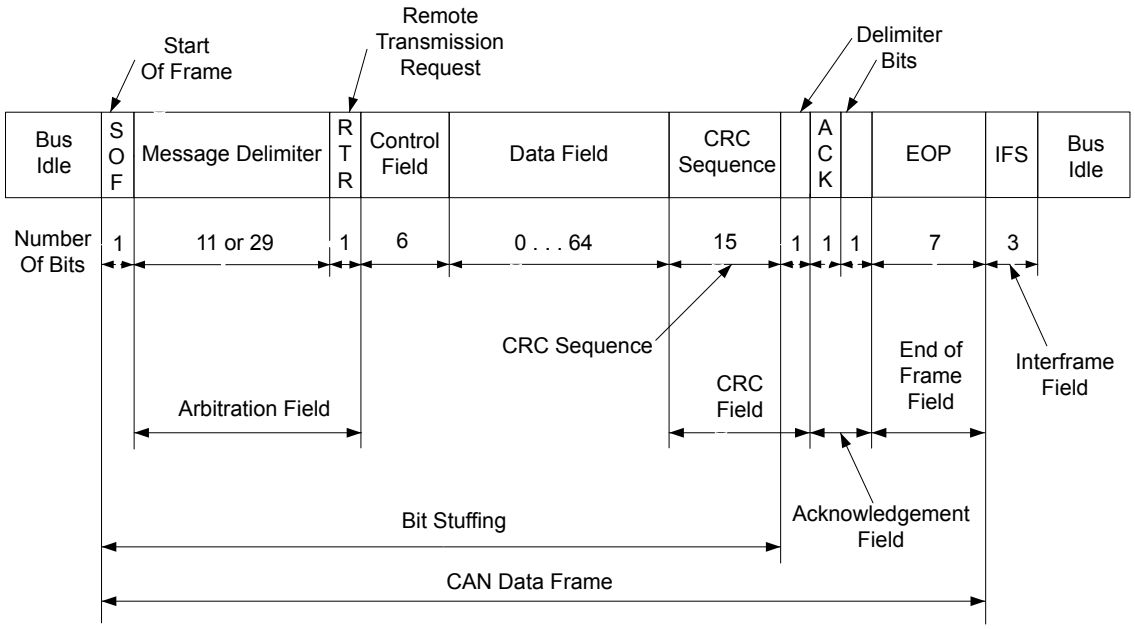

The protocol controller transfers and receives the serial data from the CAN bus and passes the data on to the message handler. The message handler then loads this information into the appropriate message object based on the current filtering and identifiers in the message object memory. The message handler is also responsible for generating interrupts based on events on the CAN bus.

The message object memory is a set of 32 identical memory blocks that hold the current configuration, status, and actual data for each message object. These are accessed via either of the CAN message object register interfaces.

The message memory is not directly accessible in the Stellaris® memory map, so the Stellaris® CAN controller provides an interface to communicate with the message memory via two CAN interface register sets for communicating with the message objects. As there is no direct access to the message object memory, these two interfaces must be used to read or write to each message object. The two message object interfaces allow parallel access to the CAN controller message objects when multiple objects may have new information that must be processed. In general, one interface is used for transmit data and one for receive data.

16.2.1 Initialization

Software initialization is started by setting the `INIT` bit in the **CAN Control (CANCTL)** register (with software or by a hardware reset) or by going bus-off, which occurs when the transmitter's error counter exceeds a count of 255. While `INIT` is set, all message transfers to and from the CAN bus are stopped and the `CANnTX` signal is held High. Entering the initialization state does not change the configuration of the CAN controller, the message objects, or the error counters. However, some configuration registers are only accessible while in the initialization state.

To initialize the CAN controller, set the **CAN Bit Timing (CANBIT)** register and configure each message object. If a message object is not needed, label it as not valid by clearing the `MSGVAL` bit

in the **CAN IFn Arbitration 2 (CANIFnARB2)** register. Otherwise, the whole message object must be initialized, as the fields of the message object may not have valid information, causing unexpected results. Both the `INIT` and `CCE` bits in the **CANCTL** register must be set in order to access the **CANBIT** register and the **CAN Baud Rate Prescaler Extension (CANBRPE)** register to configure the bit timing. To leave the initialization state, the `INIT` bit must be cleared. Afterwards, the internal Bit Stream Processor (BSP) synchronizes itself to the data transfer on the CAN bus by waiting for the occurrence of a sequence of 11 consecutive recessive bits (indicating a bus idle condition) before it takes part in bus activities and starts message transfers. Message object initialization does not require the CAN to be in the initialization state and can be done on the fly. However, message objects should all be configured to particular identifiers or set to not valid before message transfer starts. To change the configuration of a message object during normal operation, clear the `MSGVAL` bit in the **CANIFnARB2** register to indicate that the message object is not valid during the change. When the configuration is completed, set the `MSGVAL` bit again to indicate that the message object is once again valid.

16.2.2 Operation

There are two sets of CAN Interface Registers (**CANIF1x** and **CANIF2x**), which are used to access the message objects in the Message RAM. The CAN controller coordinates transfers to and from the Message RAM to and from the registers. The two sets are independent and identical and can be used to queue transactions. Generally, one interface is used to transmit data and one is used to receive data.

Once the CAN module is initialized and the `INIT` bit in the **CANCTL** register is cleared, the CAN module synchronizes itself to the CAN bus and starts the message transfer. As each message is received, it goes through the message handler's filtering process, and if it passes through the filter, is stored in the message object specified by the `MNUM` bit in the **CAN IFn Command Request (CANIFnCRQ)** register. The whole message (including all arbitration bits, data-length code, and eight data bytes) is stored in the message object. If the Identifier Mask (the `MSK` bits in the **CAN IFn Mask 1** and **CAN IFn Mask 2 (CANIFnMSKn)** registers) is used, the arbitration bits that are masked to "don't care" may be overwritten in the message object.

The CPU may read or write each message at any time via the CAN Interface Registers. The message handler guarantees data consistency in case of concurrent accesses.

The transmission of message objects is under the control of the software that is managing the CAN hardware. These can be message objects used for one-time data transfers, or permanent message objects used to respond in a more periodic manner. Permanent message objects have all arbitration and control set up, and only the data bytes are updated. At the start of transmission, the appropriate `TXRQST` bit in the **CAN Transmission Request n (CANTXRQn)** register and the `NEWDAT` bit in the **CAN New Data n (CANNWDAn)** register are set. If several transmit messages are assigned to the same message object (when the number of message objects is not sufficient), the whole message object has to be configured before the transmission of this message is requested.

The transmission of any number of message objects may be requested at the same time; they are transmitted according to their internal priority, which is based on the message identifier (`MNUM`) for the message object, with 1 being the highest priority and 32 being the lowest priority. Messages may be updated or set to not valid any time, even when their requested transmission is still pending. The old data is discarded when a message is updated before its pending transmission has started. Depending on the configuration of the message object, the transmission of a message may be requested autonomously by the reception of a remote frame with a matching identifier.

Transmission can be automatically started by the reception of a matching remote frame. To enable this mode, set the `RMTEN` bit in the **CAN IFn Message Control (CANIFnMCTL)** register. A matching received remote frame causes the `TXRQST` bit to be set and the message object automatically

transfers its data or generates an interrupt indicating a remote frame was requested. This can be strictly a single message identifier, or it can be a range of values specified in the message object. The CAN mask registers, **CANIFnMSKn**, configure which groups of frames are identified as remote frame requests. The UMASK bit in the **CANIFnMCTL** register enables the MSK bits in the **CANIFnMSKn** register to filter which frames are identified as a remote frame request. The MXTD bit in the **CANIFnMSK2** register should be set if a remote frame request is expected to be triggered by 29-bit extended identifiers.

16.2.3 Transmitting Message Objects

If the internal transmit shift register of the CAN module is ready for loading, and if there is no data transfer occurring between the CAN Interface Registers and message RAM, the valid message object with the highest priority that has a pending transmission request is loaded into the transmit shift register by the message handler and the transmission is started. The message object's NEWDAT bit in the **CANNWDAn** register is cleared. After a successful transmission, and if no new data was written to the message object since the start of the transmission, the TXRQST bit in the **CANTXRQn** register is cleared. If the CAN controller is set up to interrupt upon a successful transmission of a message object, (the TXIE bit in the **CAN IFn Message Control (CANIFnMCTL)** register is set), the INTPND bit in the **CANIFnMCTL** register is set after a successful transmission. If the CAN module has lost the arbitration or if an error occurred during the transmission, the message is re-transmitted as soon as the CAN bus is free again. If, meanwhile, the transmission of a message with higher priority has been requested, the messages are transmitted in the order of their priority.

16.2.4 Configuring a Transmit Message Object

The following steps illustrate how to configure a transmit message object.

1. In the **CAN IFn Command Mask (CANIFnCMASK)** register:
   - Set the WRNRD bit to specify a write to the **CANIFnCMASK** register; specify whether to transfer the IDMASK, DIR, and MXTD of the message object into the **CAN IFn** registers using the MASK bit
   - Specify whether to transfer the ID, DIR, XTD, and MSGVAL of the message object into the interface registers using the ARB bit
   - Specify whether to transfer the control bits into the interface registers using the CONTROL bit
   - Specify whether to clear the INTPND bit in the **CANIFnMCTL** register using the CLRINTPND bit
   - Specify whether to clear the NEWDAT bit in the **CANNWDAn** register using the NEWDAT bit
   - Specify which bits to transfer using the DATAA and DATAB bits
2. In the **CANIFnMSK1** register, use the MSK[15:0] bits to specify which of the bits in the 29-bit or 11-bit message identifier are used for acceptance filtering. Note that MSK[15:0] in this register are used for bits [15:0] of the 29-bit message identifier and are not used for an 11-bit identifier. A value of 0x00 enables all messages to pass through the acceptance filtering. Also note that in order for these bits to be used for acceptance filtering, they must be enabled by setting the UMASK bit in the **CANIFnMCTL** register.

3. In the **CANIFnMSK2** register, use the `MSK[12:0]` bits to specify which of the bits in the 29-bit or 11-bit message identifier are used for acceptance filtering. Note that `MSK[12:0]` are used for bits [28:16] of the 29-bit message identifier; whereas `MSK[12:2]` are used for bits [10:0] of the 11-bit message identifier. Use the `MXTD` and `MDIR` bits to specify whether to use `XTD` and `DIR` for acceptance filtering. A value of 0x00 enables all messages to pass through the acceptance filtering. Also note that in order for these bits to be used for acceptance filtering, they must be enabled by setting the `UMASK` bit in the **CANIFnMCTL** register.

4. For a 29-bit identifier, configure `ID[15:0]` in the **CANIFnARB1** register to are used for bits [15:0] of the message identifier and `ID[12:0]` in the **CANIFnARB2** register to are used for bits [28:16] of the message identifier. Set the `XTD` bit to indicate an extended identifier; set the `DIR` bit to indicate transmit; and set the `MSGVAL` bit to indicate that the message object is valid.

5. For an 11-bit identifier, disregard the **CANIFnARB1** register and configure `ID[12:2]` in the **CANIFnARB2** register to are used for bits [10:0] of the message identifier. Clear the `XTD` bit to indicate a standard identifier; set the `DIR` bit to indicate transmit; and set the `MSGVAL` bit to indicate that the message object is valid.

6. In the **CANIFnMCTL** register:

   - Optionally set the `UMASK` bit to enable the mask (`MSK`, `MXTD`, and `MDIR` specified in the **CANIFnMSK1** and **CANIFnMSK2** registers) for acceptance filtering
   - Optionally set the `TXIE` bit to enable the `INTPND` bit to be set after a successful transmission
   - Optionally set the `RMTEN` bit to enable the `TXRQST` bit to be set upon the reception of a matching remote frame allowing automatic transmission
   - Set the `EOB` bit for a single message object;
   - Set the `DLC[3:0]` field to specify the size of the data frame. Take care during this configuration not to set the `NEWDAT`, `MSGLST`, `INTPND` or `TXRQST` bits.

7. Load the data to be transmitted into the CAN IFn Data **(CANIFnDA1, CANIFnDA2, CANIFnDB1, CANIFnDB2)** or **(CANIFnDATAA and CANIFnDATAB)** registers. Byte 0 of the CAN data frame is stored in `DATA[7:0]` in the **CANIFnDA1** register.

8. Program the number of the message object to be transmitted in the `MNUM` field in the **CAN IFn Command Request (CANIFnCRQ)** register.

9. When everything is properly configured, set the `TXRQST` bit in the **CANIFnMCTL** register. Once this bit is set, the message object is available to be transmitted, depending on priority and bus availability. Note that setting the `RMTEN` bit in the **CANIFnMCTL** register can also start message transmission if a matching remote frame has been received.

16.2.5 Updating a Transmit Message Object

The CPU may update the data bytes of a Transmit Message Object any time via the CAN Interface Registers and neither the `MSGVAL` bit in the **CANIFnARB2** register nor the `TXRQST` bits in the **CANIFnMCTL** register have to be cleared before the update.

Even if only some of the data bytes are to be updated, all four bytes of the corresponding **CANIFnDAn**/**CANIFnDBn** register have to be valid before the content of that register is transferred to the message object. Either the CPU must write all four bytes into the **CANIFnDAn**/**CANIFnDBn**

register or the message object is transferred to the **CANIFnDAn**/**CANIFnDBn** register before the CPU writes the new data bytes.

In order to only update the data in a message object, the WRNRD, DATAA and DATAB bits in the **CANIFnMSKn** register are set, followed by writing the updated data into **CANIFnDA1**, **CANIFnDA2**, **CANIFnDB1**, and **CANIFnDB2** registers, and then the number of the message object is written to the MNUM field in the **CAN IFn Command Request (CANIFnCRQ)** register. To begin transmission of the new data as soon as possible, set the TXRQST bit in the **CANIFnMSKn** register.

To prevent the clearing of the TXRQST bit in the **CANIFnMCTL** register at the end of a transmission that may already be in progress while the data is updated, the NEWDAT and TXRQST bits have to be set at the same time in the **CANIFnMCTL** register. When these bits are set at the same time, NEWDAT is cleared as soon as the new transmission has started.

16.2.6 Accepting Received Message Objects

When the arbitration and control field (the ID and XTD bits in the **CANIFnARB2** and the RMTEN and DLC[3:0] bits of the **CANIFnMCTL** register) of an incoming message is completely shifted into the CAN controller, the message handling capability of the controller starts scanning the message RAM for a matching valid message object. To scan the message RAM for a matching message object, the controller uses the acceptance filtering programmed through the mask bits in the **CANIFnMSKn** register and enabled using the UMASK bit in the **CANIFnMCTL** register. Each valid message object, starting with object 1, is compared with the incoming message to locate a matching message object in the message RAM. If a match occurs, the scanning is stopped and the message handler proceeds depending on whether it is a data frame or remote frame that was received.

16.2.7 Receiving a Data Frame

The message handler stores the message from the CAN controller receive shift register into the matching message object in the message RAM. The data bytes, all arbitration bits, and the DLC bits are all stored into the corresponding message object. In this manner, the data bytes are connected with the identifier even if arbitration masks are used. The NEWDAT bit of the **CANIFnMCTL** register is set to indicate that new data has been received. The CPU should clear this bit when it reads the message object to indicate to the controller that the message has been received, and the buffer is free to receive more messages. If the CAN controller receives a message and the NEWDAT bit is already set, the MSGLST bit in the **CANIFnMCTL** register is set to indicate that the previous data was lost. If the system requires an interrupt upon successful reception of a frame, the RXIE bit of the **CANIFnMCTL** register should be set. In this case, the INTPND bit of the same register is set, causing the **CANINT** register to point to the message object that just received a message. The TXRQST bit of this message object should be cleared to prevent the transmission of a remote frame.

16.2.8 Receiving a Remote Frame

A remote frame contains no data, but instead specifies which object should be transmitted. When a remote frame is received, three different configurations of the matching message object have to be considered:

Configuration in CANIFnMCTL	Description
■ DIR = 1 (direction = transmit); programmed in the **CANIFnARB2** register ■ RMTEN = 1 (set the TXRQST bit of the **CANIFnMCTL** register at reception of the frame to enable transmission) ■ UMASK = 1 or 0	At the reception of a matching remote frame, the TXRQST bit of this message object is set. The rest of the message object remains unchanged, and the controller automatically transfers the data in the message object as soon as possible.

Configuration in CANIFnMCTL	Description
■ DIR = 1 (direction = transmit); programmed in the **CANIFnARB2** register ■ RMTEN = 0 (do not change the TXRQST bit of the **CANIFnMCTL** register at reception of the frame) ■ UMASK = 0 (ignore mask in the **CANIFnMSKn** register)	At the reception of a matching remote frame, the TXRQST bit of this message object remains unchanged, and the remote frame is ignored. This remote frame is disabled, the data is not transferred and there is no indication that the remote frame ever happened.
■ DIR = 1 (direction = transmit); programmed in the **CANIFnARB2** register ■ RMTEN = 0 (do not change the TXRQST bit of the **CANIFnMCTL** register at reception of the frame) ■ UMASK = 1 (use mask (MSK, MXTD, and MDIR in the **CANIFnMSKn** register) for acceptance filtering)	At the reception of a matching remote frame, the TXRQST bit of this message object is cleared. The arbitration and control field (ID + XTD + RMTEN + DLC) from the shift register is stored into the message object in the message RAM and the NEWDAT bit of this message object is set. The data field of the message object remains unchanged; the remote frame is treated similar to a received data frame. This is useful for a remote data request from another CAN device for which the Stellaris® controller does not have readily available data. The software must fill the data and answer the frame manually.

16.2.9 Receive/Transmit Priority

The receive/transmit priority for the message objects is controlled by the message number. Message object 1 has the highest priority, while message object 32 has the lowest priority. If more than one transmission request is pending, the message objects are transmitted in order based on the message object with the lowest message number. This should not be confused with the message identifier as that priority is enforced by the CAN bus. This means that if message object 1 and message object 2 both have valid messages that need to be transmitted, message object 1 will always be transmitted first regardless of the message identifier in the message object itself.

16.2.10 Configuring a Receive Message Object

The following steps illustrate how to configure a receive message object.

1. Program the **CAN IFn Command Mask (CANIFnCMASK)** register as described in the "Configuring a Transmit Message Object" on page 436 section, except that the WRNRD bit is set to specify a write to the message RAM.

2. Program the **CANIFnMSK1**and **CANIFnMSK2** registers as described in the "Configuring a Transmit Message Object" on page 436 section to configure which bits are used for acceptance filtering. Note that in order for these bits to be used for acceptance filtering, they must be enabled by setting the UMASK bit in the **CANIFnMCTL** register.

3. In the **CANIFnMSK2** register, use the MSK[12:0] bits to specify which of the bits in the 29-bit or 11-bit message identifier are used for acceptance filtering. Note that MSK[12:0] are used for bits [28:16] of the 29-bit message identifier; whereas MSK[12:2] are used for bits [10:0] of the 11-bit message identifier. Use the MXTD and MDIR bits to specify whether to use XTD and DIR for acceptance filtering. A value of 0x00 enables all messages to pass through the acceptance filtering. Also note that in order for these bits to be used for acceptance filtering, they must be enabled by setting the UMASK bit in the **CANIFnMCTL** register.

4. Program the **CANIFnARB1** and **CANIFnARB2** registers as described in the "Configuring a Transmit Message Object" on page 436 section to program XTD and ID bits for the message identifier to be received; set the MSGVAL bit to indicate a valid message; and clear the DIR bit to specify receive.

5. In the **CANIFnMCTL** register:
   - Optionally set the UMASK bit to enable the mask (MSK, MXTD, and MDIR specified in the **CANIFnMSK1** and **CANIFnMSK2** registers) for acceptance filtering
   - Optionally set the RXIE bit to enable the INTPND bit to be set after a successful reception
   - Clear the RMTEN bit to leave the TXRQST bit unchanged
   - Set the EOB bit for a single message object
   - Set the DLC[3:0] field to specify the size of the data frame

   Take care during this configuration not to set the NEWDAT, MSGLST, INTPND or TXRQST bits.
6. Program the number of the message object to be received in the MNUM field in the **CAN IFn Command Request (CANIFnCRQ)** register. Reception of the message object begins as soon as a matching frame is available on the CAN bus.

When the message handler stores a data frame in the message object, it stores the received Data Length Code and eight data bytes in the **CANIFnDA1**, **CANIFnDA2**, **CANIFnDB1**, and **CANIFnDB2** register. Byte 0 of the CAN data frame is stored in DATA[7:0] in the **CANIFnDA1** register. If the Data Length Code is less than 8, the remaining bytes of the message object are overwritten by unspecified values.

The CAN mask registers can be used to allow groups of data frames to be received by a message object. The CAN mask registers, **CANIFnMSKn**, configure which groups of frames are received by a message object. The UMASK bit in the **CANIFnMCTL** register enables the MSK bits in the **CANIFnMSKn** register to filter which frames are received. The MXTD bit in the **CANIFnMSK2** register should be set if only 29-bit extended identifiers are expected by this message object.

16.2.11 Handling of Received Message Objects

The CPU may read a received message any time via the CAN Interface registers because the data consistency is guaranteed by the message handler state machine.

Typically, the CPU first writes 0x007F to the **CANIFnCMSK** register and then writes the number of the message object to the **CANIFnCRQ** register. That combination transfers the whole received message from the message RAM into the Message Buffer registers (**CANIFnMSKn**, **CANIFnARBn**, and **CANIFnMCTL**). Additionally, the NEWDAT and INTPND bits are cleared in the message RAM, acknowledging that the message has been read and clearing the pending interrupt generated by this message object.

If the message object uses masks for acceptance filtering, the **CANIFnARBn** registers show the full, unmasked ID for the received message.

The NEWDAT bit in the **CANIFnMCTL** register shows whether a new message has been received since the last time this message object was read. The MSGLST bit in the **CANIFnMCTL** register shows whether more than one message has been received since the last time this message object was read. MSGLST is not automatically cleared, and should be cleared by software after reading its status.

Using a remote frame, the CPU may request new data from another CAN node on the CAN bus. Setting the TXRQST bit of a receive object causes the transmission of a remote frame with the receive object's identifier. This remote frame triggers the other CAN node to start the transmission of the matching data frame. If the matching data frame is received before the remote frame could be

transmitted, the TXRQST bit is automatically reset. This prevents the possible loss of data when the other device on the CAN bus has already transmitted the data slightly earlier than expected.

16.2.11.1 Configuration of a FIFO Buffer

With the exception of the EOB bit in the **CANIFnMCTL** register, the configuration of receive message objects belonging to a FIFO buffer is the same as the configuration of a single receive message object (see "Configuring a Receive Message Object" on page 439). To concatenate two or more message objects into a FIFO buffer, the identifiers and masks (if used) of these message objects have to be programmed to matching values. Due to the implicit priority of the message objects, the message object with the lowest message object number is the first message object in a FIFO buffer. The EOB bit of all message objects of a FIFO buffer except the last one must be cleared. The EOB bit of the last message object of a FIFO buffer is set, indicating it is the last entry in the buffer.

16.2.11.2 Reception of Messages with FIFO Buffers

Received messages with identifiers matching to a FIFO buffer are stored starting with the message object with the lowest message number. When a message is stored into a message object of a FIFO buffer, the NEWDAT of the **CANIFnMCTL** register bit of this message object is set. By setting NEWDAT while EOB is clear, the message object is locked and cannot be written to by the message handler until the CPU has cleared the NEWDAT bit. Messages are stored into a FIFO buffer until the last message object of this FIFO buffer is reached. If none of the preceding message objects has been released by clearing the NEWDAT bit, all further messages for this FIFO buffer will be written into the last message object of the FIFO buffer and therefore overwrite previous messages.

16.2.11.3 Reading from a FIFO Buffer

When the CPU transfers the contents of a message object from a FIFO buffer by writing its number to the **CANIFnCRQ**, the TXRQST and CLRINTPND bits in the **CANIFnCMSK** register should be set such that the NEWDAT and INTPEND bits in the **CANIFnMCTL** register are cleared after the read. The values of these bits in the **CANIFnMCTL** register always reflect the status of the message object before the bits are cleared. To assure the correct function of a FIFO buffer, the CPU should read out the message objects starting with the message object with the lowest message number. Figure 16-3 on page 442 shows how a set of message objects which are concatenated to a FIFO Buffer can be handled by the CPU.

Figure 16-3. Message Objects in a FIFO Buffer

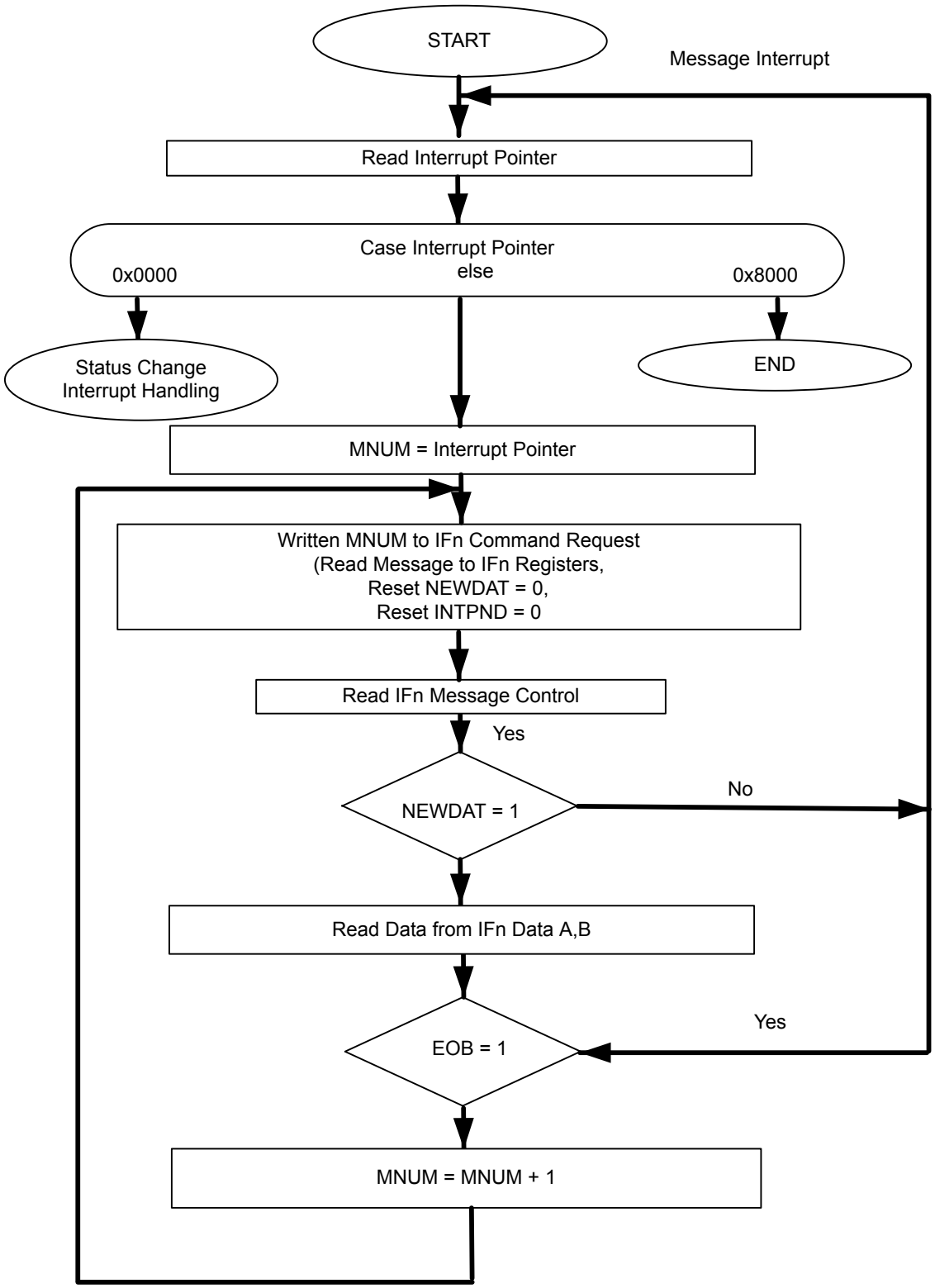

16.2.12 Handling of Interrupts

If several interrupts are pending, the **CAN Interrupt (CANINT)** register points to the pending interrupt with the highest priority, disregarding their chronological order. The status interrupt has the highest priority. Among the message interrupts, the message object's interrupt with the lowest message number has the highest priority. A message interrupt is cleared by clearing the message object's `INTPND` bit in the **CANIFnMCTL** register or by reading the **CAN Status (CANSTS)** register. The status Interrupt is cleared by reading the **CANSTS** register.

The interrupt identifier `INTID` in the **CANINT** register indicates the cause of the interrupt. When no interrupt is pending, the register reads as 0x0000. If the value of the `INTID` field is different from 0, then there is an interrupt pending. If the `IE` bit is set in the **CANCTL** register, the interrupt line to the CPU is active. The interrupt line remains active until the `INTID` field is 0, meaning that all interrupt sources have been cleared (the cause of the interrupt is reset), or until `IE` is cleared, which disables interrupts from the CAN controller.

The `INTID` field of the **CANINT** register points to the pending message interrupt with the highest interrupt priority. The `SIE` bit in the **CANCTL** register controls whether a change of the `RXOK`, `TXOK`, and `LEC` bits in the **CANSTS** can cause an interrupt. The `EIE` bit in the **CANCTL**register controls whether a change of the `BOFF` and `EWARN` bits in the **CANSTS** can cause an interrupt. The `IE` bit in the **CANCTL** controls whether any interrupt from the CAN controller actually generates an interrupt to the microcontroller's interrupt controller. The **CANINT** register is updated even when the `IE` bit in the **CANCTL** register is clear, but the interrupt will not be indicated to the CPU.

A value of 0x8000 in the **CANINT** register indicates that an interrupt is pending because the CAN module has updated, but not necessarily changed, the **CANSTS** , indicating that either an error or status interrupt has been generated. A write access to the **CANSTS** register can clear the `RXOK`, `TXOK`, and `LEC` bits in that same register; however, the only way to clear the source of a status interrupt is to read the **CANSTS** register.

There are two ways to determine the source of an interrupt during interrupt handling. The first is to read the `INTID` bit in the **CANINT** register to determine the highest priority interrupt that is pending, and the second is to read the **CAN Message Interrupt Pending (CANMSGnINT)** register to see all of the message objects that have pending interrupts.

An interrupt service routine reading the message that is the source of the interrupt may read the message and clear the message object's `INTPND` bit at the same time by setting the `CLRINTPND` bit in the **CANIFnCMSK** register. Once the `INTPND` bit has been cleared, the **CANINT** register contains the message number for the next message object with a pending interrupt.

16.2.13 Test Mode

A Test Mode is provided, which allows various diagnostics to be performed. Test Mode is entered by setting the `TEST` bit **CANCTL** register. Once in Test Mode, the `TX[1:0]`, `LBACK`, `SILENT` and `BASIC` bits in the **CAN Test (CANTST)** register can be used to put the CAN controller into the various diagnostic modes. The `RX` bit in the **CANTST** register allows monitoring of the `CANnRX` signal. All **CANTST** register functions are disabled when the `TEST` bit is cleared.

16.2.13.1 Silent Mode

Silent Mode can be used to analyze the traffic on a CAN bus without affecting it by the transmission of dominant bits (Acknowledge Bits, Error Frames). The CAN Controller is put in Silent Mode setting the `SILENT` bit in the **CANTST** register. In Silent Mode, the CAN controller is able to receive valid data frames and valid remote frames, but it sends only recessive bits on the CAN bus and it cannot start a transmission. If the CAN Controller is required to send a dominant bit (ACK bit, overload flag,

or active error flag), the bit is rerouted internally so that the CAN Controller monitors this dominant bit, although the CAN bus remains in recessive state.

16.2.13.2 Loopback Mode

Loopback mode is useful for self-test functions. In Loopback Mode, the CAN Controller internally routes the `CANnTX` signal on to the `CANnRX` signal and treats its own transmitted messages as received messages and stores them (if they pass acceptance filtering) into the message buffer. The CAN Controller is put in Loopback Mode by setting the `LBACK` bit in the **CANTST** register. To be independent from external stimulation, the CAN Controller ignores acknowledge errors (a recessive bit sampled in the acknowledge slot of a data/remote frame) in Loopback Mode. The actual value of the `CANnRX` signal is disregarded by the CAN Controller. The transmitted messages can be monitored on the `CANnTX` signal.

16.2.13.3 Loopback Combined with Silent Mode

Loopback Mode and Silent Mode can be combined to allow the CAN Controller to be tested without affecting a running CAN system connected to the `CANnTX` and `CANnRX` signals. In this mode, the `CANnRX` signal is disconnected from the CAN Controller and the `CANnTX` signal is held recessive. This mode is enabled by setting both the `LBACK` and `SILENT` bits in the **CANTST** register.

16.2.13.4 Basic Mode

Basic Mode allows the CAN Controller to be operated without the Message RAM. In Basic Mode, The CANIF1 registers are used as the transmit buffer. The transmission of the contents of the IF1 registers is requested by setting the `BUSY` bit of the **CANIF1CRQ** register. The CANIF1 registers are locked while the `BUSY` bit is set. The `BUSY` bit indicates that a transmission is pending. As soon the CAN bus is idle, the CANIF1 registers are loaded into the shift register of the CAN Controller and transmission is started. When the transmission has completed, the `BUSY` bit is cleared and the locked CANIF1 registers are released. A pending transmission can be aborted at any time by clearing the `BUSY` bit in the **CANIF1CRQ** register while the CANIF1 registers are locked. If the CPU has cleared the `BUSY` bit, a possible retransmission in case of lost arbitration or an error is disabled.

The CANIF2 Registers are used as a receive buffer. After the reception of a message, the contents of the shift register is stored into the CANIF2 registers, without any acceptance filtering. Additionally, the actual contents of the shift register can be monitored during the message transfer. Each time a read message object is initiated by setting the `BUSY` bit of the **CANIF2CRQ** register, the contents of the shift register are stored into the CANIF2 registers.

In Basic Mode, all message-object-related control and status bits and of the control bits of the **CANIFnCMSK** registers are not evaluated. The message number of the **CANIFnCRQ** registers is also not evaluated. In the **CANIF2MCTL** register, the `NEWDAT` and `MSGLST` bits retain their function, the `DLC[3:0]` field shows the received DLC, the other control bits are cleared.

Basic Mode is enabled by setting the `BASIC` bit in the **CANTST** register.

16.2.13.5 Transmit Control

Software can directly override control of the `CANnTX` signal in four different ways.

- `CANnTX` is controlled by the CAN Controller
- The sample point is driven on the `CANnTX` signal to monitor the bit timing
- `CANnTX` drives a low value

- CANnTX drives a high value

The last two functions, combined with the readable CAN receive pin CANnRX, can be used to check the physical layer of the CAN bus.

The Transmit Control function is enabled by programming the TX[1:0] field in the **CANTST** register. The three test functions for the CANnTX signal interfere with all CAN protocol functions. TX[1:0] must be cleared when CAN message transfer or Loopback Mode, Silent Mode, or Basic Mode are selected.

16.2.14 Bit Timing Configuration Error Considerations

Even if minor errors in the configuration of the CAN bit timing do not result in immediate failure, the performance of a CAN network can be reduced significantly. In many cases, the CAN bit synchronization amends a faulty configuration of the CAN bit timing to such a degree that only occasionally an error frame is generated. In the case of arbitration, however, when two or more CAN nodes simultaneously try to transmit a frame, a misplaced sample point may cause one of the transmitters to become error passive. The analysis of such sporadic errors requires a detailed knowledge of the CAN bit synchronization inside a CAN node and of the CAN nodes' interaction on the CAN bus.

16.2.15 Bit Time and Bit Rate

The CAN system supports bit rates in the range of lower than 1 Kbps up to 1000 Kbps. Each member of the CAN network has its own clock generator. The timing parameter of the bit time can be configured individually for each CAN node, creating a common bit rate even though the CAN nodes' oscillator periods may be different.

Because of small variations in frequency caused by changes in temperature or voltage and by deteriorating components, these oscillators are not absolutely stable. As long as the variations remain inside a specific oscillator's tolerance range, the CAN nodes are able to compensate for the different bit rates by periodically resynchronizing to the bit stream.

According to the CAN specification, the bit time is divided into four segments (see Figure 16-4 on page 446): the Synchronization Segment, the Propagation Time Segment, the Phase Buffer Segment 1, and the Phase Buffer Segment 2. Each segment consists of a specific, programmable number of time quanta (see Table 16-1 on page 446). The length of the time quantum (t_q), which is the basic time unit of the bit time, is defined by the CAN controller's system clock (fsys) and the Baud Rate Prescaler (BRP):

$$t_q = BRP / fsys$$

The CAN module's system clock fsys is the frequency of its CAN module clock input.

The Synchronization Segment Sync_Seg is that part of the bit time where edges of the CAN bus level are expected to occur; the distance between an edge that occurs outside of Sync_Seg and the Sync_Seg is called the *phase error* of that edge.

The Propagation Time Segment Prop_Seg is intended to compensate for the physical delay times within the CAN network.

The Phase Buffer Segments Phase_Seg1 and Phase_Seg2 surround the Sample Point.

The (Re-)Synchronization Jump Width (SJW) defines how far a resynchronization may move the Sample Point inside the limits defined by the Phase Buffer Segments to compensate for edge phase errors.

A given bit rate may be met by different bit-time configurations, but for the proper function of the CAN network, the physical delay times and the oscillator's tolerance range have to be considered.

Figure 16-4. CAN Bit Time

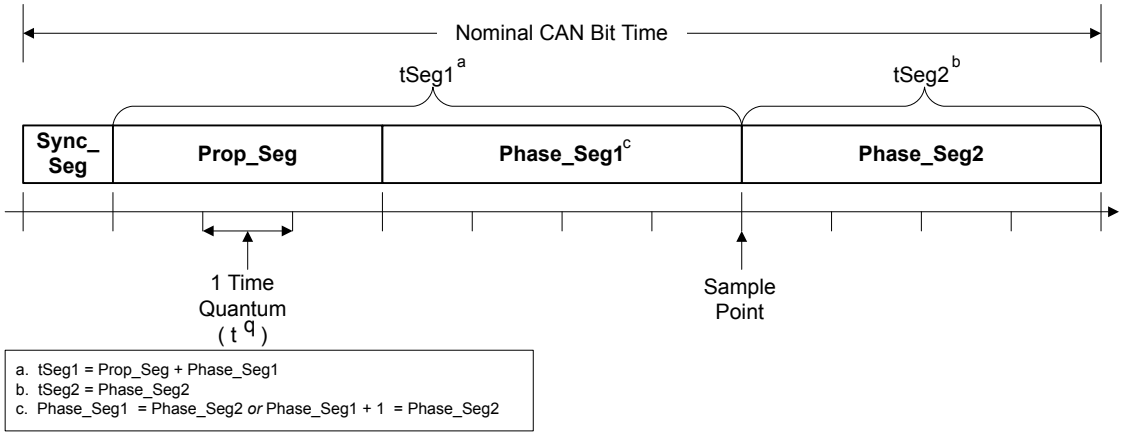

Table 16-1. CAN Protocol Ranges[a]

Parameter	Range	Remark
BRP	[1 .. 32]	Defines the length of the time quantum t_q
Sync_Seg	1 t_q	Fixed length, synchronization of bus input to system clock
Prop_Seg	[1 .. 8] t_q	Compensates for the physical delay times
Phase_Seg1	[1 .. 8] t_q	May be lengthened temporarily by synchronization
Phase_Seg2	[1 .. 8] t_q	May be shortened temporarily by synchronization
SJW	[1 .. 4] t_q	May not be longer than either Phase Buffer Segment

a. This table describes the minimum programmable ranges required by the CAN protocol.

The bit timing configuration is programmed in two register bytes in the **CANBIT** register. The sum of `Prop_Seg` and `Phase_Seg1` (as `TSEG1`) is combined with `Phase_Seg2` (as `TSEG2`) in one byte, and `SJW` and `BRP` are combined in the other byte.

In these bit timing registers, the four components `TSEG1`, `TSEG2`, `SJW`, and `BRP` have to be programmed to a numerical value that is one less than its functional value; so instead of values in the range of [1..n], values in the range of [0..n-1] are programmed. That way, for example, `SJW` (functional range of [1..4]) is represented by only two bits. Therefore, the length of the bit time is (programmed values):

$$[TSEG1 + TSEG2 + 3] \times t_q$$

or (functional values):

$$[Sync_Seg + Prop_Seg + Phase_Seg1 + Phase_Seg2] \times t_q$$

The data in the **CANBIT** register is the configuration input of the CAN protocol controller. The baud rate prescaler (configured by the `BRP` field) defines the length of the time quantum, the basic time unit of the bit time; the bit timing logic (configured by `TSEG1`, `TSEG2`, and `SJW`) defines the number of time quanta in the bit time.

The processing of the bit time, the calculation of the position of the sample point, and occasional synchronizations are controlled by the CAN controller and are evaluated once per time quantum.

The CAN controller translates messages to and from frames. It generates and discards the enclosing fixed format bits, inserts and extracts stuff bits, calculates and checks the CRC code, performs the error management, and decides which type of synchronization is to be used. It is evaluated at the sample point and processes the sampled bus input bit. The time after the sample point that is needed to calculate the next bit to be sent (that is, the data bit, CRC bit, stuff bit, error flag, or idle) is called the information processing time (IPT).

The IPT is application-specific but may not be longer than 2 t_q; the CAN's IPT is 0 t_q. Its length is the lower limit of the programmed length of `Phase_Seg2`. In case of synchronization, `Phase_Seg2` may be shortened to a value less than IPT, which does not affect bus timing.

16.2.16 Calculating the Bit Timing Parameters

Usually, the calculation of the bit timing configuration starts with a required bit rate or bit time. The resulting bit time (1/bit rate) must be an integer multiple of the system clock period.

The bit time may consist of 4 to 25 time quanta. Several combinations may lead to the required bit time, allowing iterations of the following steps.

The first part of the bit time to be defined is the `Prop_Seg`. Its length depends on the delay times measured in the system. A maximum bus length as well as a maximum node delay has to be defined for expandable CAN bus systems. The resulting time for `Prop_Seg` is converted into time quanta (rounded up to the nearest integer multiple of t_q).

The `Sync_Seg` is 1 t_q long (fixed), which leaves (bit time - `Prop_Seg` - 1) t_q for the two Phase Buffer Segments. If the number of remaining t_q is even, the Phase Buffer Segments have the same length, that is, `Phase_Seg2` = `Phase_Seg1`, else `Phase_Seg2` = `Phase_Seg1` + 1.

The minimum nominal length of `Phase_Seg2` has to be regarded as well. `Phase_Seg2` may not be shorter than the CAN controller's IPT, which is t_q.

The length of the synchronization jump width is set to its maximum value, which is the minimum of 4 and `Phase_Seg1`.

The oscillator tolerance range necessary for the resulting configuration is calculated by the formula given below:

$$(1 - df) \times fnom \leq fosc \leq (1 + df) \times fnom$$

where:

- `df` = Maximum tolerance of oscillator frequency
- `fosc` = Actual oscillator frequency
- `fnom` = Nominal oscillator frequency

Maximum frequency tolerance must take into account the following formulas:

$$df \leq \frac{(Phase_Seg1, Phase_Seg2)\ \min}{2 \times (13 \times tbit - Phase_Seg2)}$$

$$df\max = 2 \times df \times fnom$$

where:

- `Phase_Seg1` and `Phase_Seg2` are from Table 16-1 on page 446
- `tbit` = Bit Time
- `dfmax` = Maximum difference between two oscillators

If more than one configuration is possible, that configuration allowing the highest oscillator tolerance range should be chosen.

CAN nodes with different system clocks require different configurations to come to the same bit rate. The calculation of the propagation time in the CAN network, based on the nodes with the longest delay times, is done once for the whole network.

The CAN system's oscillator tolerance range is limited by the node with the lowest tolerance range.

The calculation may show that bus length or bit rate have to be decreased or that the oscillator frequencies' stability has to be increased in order to find a protocol-compliant configuration of the CAN bit timing.

16.2.16.1 Example for Bit Timing at High Baud Rate

In this example, the frequency of CAN clock is 25 MHz and the bit rate is 1 Mbps.

```
tq 200 ns = (BRP + 1)/CAN Clock
delay of bus driver 50 ns
delay of receiver circuit 30 ns
delay of bus line (40m) 220 ns
tProp 400 ns = 2 × tq
tSJW 200 ns = 1 × tq
tTSeg1 600 ns = tProp + tSJW
tTSeg2 200 ns = (Information Processing Time + 1) × tq
tSync-Seg 200 ns = 1 × tq
bit time 1000 ns = tSync-Seg + tTSeg1 + tTSeg2
```

In the above example, the bit field values for the **CANBIT** register are: `TSEG2`=1, `TSEG1`=2, `SJW` =0 and `BRP`=3. This makes the final value programmed into the **CANBIT** register = 0x3FC0.

16.2.16.2 Example for Bit Timing at Low Baud Rate

In this example, the frequency of the CAN clock is 50 MHz and the bit rate is 100 Kbps.

```
tq 500 ns = (BRP + 1)/CAN clock
delay of bus driver 200 ns
delay of receiver circuit 80 ns
delay of bus line (40m) 220 ns
tProp 4.5 µs = 9 × tq
tSJW 2 µs = 4 × tq
tTSeg1 6.5 µs = tProp + tSJW
tTSeg2 3 µs = (Information Processing Time + 6) × tq
tSync-Seg 500 ns = 1 × tq
bit time 10 µs = tSync-Seg + tTSeg1 + tTSeg2
```

In the above example, the bit field values for the **CANBIT** register are: `TSEG2`=5, `TSEG1`=12, `SJW` =3 and `BRP`=24. This makes the final value programmed into the **CANBIT** register = 0x5CD8.

16.3 Register Map

Table 16-2 on page 449 lists the registers. All addresses given are relative to the CAN base address of:

- CAN0: 0x4004.0000

Table 16-2. CAN Register Map

Offset	Name	Type	Reset	Description	See page
0x000	CANCTL	R/W	0x0000.0001	CAN Control	451
0x004	CANSTS	R/W	0x0000.0000	CAN Status	453
0x008	CANERR	RO	0x0000.0000	CAN Error Counter	456
0x00C	CANBIT	R/W	0x0000.2301	CAN Bit Timing	457
0x010	CANINT	RO	0x0000.0000	CAN Interrupt	459
0x014	CANTST	R/W	0x0000.0000	CAN Test	460
0x018	CANBRPE	R/W	0x0000.0000	CAN Baud Rate Prescaler Extension	462
0x020	CANIF1CRQ	R/W	0x0000.0001	CAN IF1 Command Request	463
0x024	CANIF1CMSK	R/W	0x0000.0000	CAN IF1 Command Mask	464
0x028	CANIF1MSK1	R/W	0x0000.FFFF	CAN IF1 Mask 1	466
0x02C	CANIF1MSK2	R/W	0x0000.FFFF	CAN IF1 Mask 2	467
0x030	CANIF1ARB1	R/W	0x0000.0000	CAN IF1 Arbitration 1	468
0x034	CANIF1ARB2	R/W	0x0000.0000	CAN IF1 Arbitration 2	469
0x038	CANIF1MCTL	R/W	0x0000.0000	CAN IF1 Message Control	471
0x03C	CANIF1DA1	R/W	0x0000.0000	CAN IF1 Data A1	473
0x040	CANIF1DA2	R/W	0x0000.0000	CAN IF1 Data A2	473
0x044	CANIF1DB1	R/W	0x0000.0000	CAN IF1 Data B1	473
0x048	CANIF1DB2	R/W	0x0000.0000	CAN IF1 Data B2	473
0x080	CANIF2CRQ	R/W	0x0000.0001	CAN IF2 Command Request	463
0x084	CANIF2CMSK	R/W	0x0000.0000	CAN IF2 Command Mask	464
0x088	CANIF2MSK1	R/W	0x0000.FFFF	CAN IF2 Mask 1	466
0x08C	CANIF2MSK2	R/W	0x0000.FFFF	CAN IF2 Mask 2	467
0x090	CANIF2ARB1	R/W	0x0000.0000	CAN IF2 Arbitration 1	468
0x094	CANIF2ARB2	R/W	0x0000.0000	CAN IF2 Arbitration 2	469
0x098	CANIF2MCTL	R/W	0x0000.0000	CAN IF2 Message Control	471
0x09C	CANIF2DA1	R/W	0x0000.0000	CAN IF2 Data A1	473
0x0A0	CANIF2DA2	R/W	0x0000.0000	CAN IF2 Data A2	473
0x0A4	CANIF2DB1	R/W	0x0000.0000	CAN IF2 Data B1	473

Offset	Name	Type	Reset	Description	See page
0x0A8	CANIF2DB2	R/W	0x0000.0000	CAN IF2 Data B2	473
0x100	CANTXRQ1	RO	0x0000.0000	CAN Transmission Request 1	474
0x104	CANTXRQ2	RO	0x0000.0000	CAN Transmission Request 2	474
0x120	CANNWDA1	RO	0x0000.0000	CAN New Data 1	475
0x124	CANNWDA2	RO	0x0000.0000	CAN New Data 2	475
0x140	CANMSG1INT	RO	0x0000.0000	CAN Message 1 Interrupt Pending	476
0x144	CANMSG2INT	RO	0x0000.0000	CAN Message 2 Interrupt Pending	476
0x160	CANMSG1VAL	RO	0x0000.0000	CAN Message 1 Valid	477
0x164	CANMSG2VAL	RO	0x0000.0000	CAN Message 2 Valid	477

16.4 CAN Register Descriptions

The remainder of this section lists and describes the CAN registers, in numerical order by address offset. There are two sets of Interface Registers that are used to access the Message Objects in the Message RAM: **CANIF1x** and **CANIF2x**. The function of the two sets are identical and are used to queue transactions.

Register 1: CAN Control (CANCTL), offset 0x000

This control register initializes the module and enables test mode and interrupts.

The bus-off recovery sequence (see CAN Specification Rev. 2.0) cannot be shortened by setting or clearing `INIT`. If the device goes bus-off, it sets `INIT`, stopping all bus activities. Once `INIT` has been cleared by the CPU, the device then waits for 129 occurrences of Bus Idle (129 * 11 consecutive High bits) before resuming normal operations. At the end of the bus-off recovery sequence, the Error Management Counters are reset.

During the waiting time after `INIT` is cleared, each time a sequence of 11 High bits has been monitored, a BITERROR0 code is written to the **CANSTS** register (the `LEC` field = 0x5), enabling the CPU to readily check whether the CAN bus is stuck Low or continuously disturbed, and to monitor the proceeding of the bus-off recovery sequence.

CAN Control (CANCTL)

CAN0 base: 0x4004.0000
Offset 0x000
Type R/W, reset 0x0000.0001

	31	30	29	28	27	26	25	24	23	22	21	20	19	18	17	16
	reserved															
Type	RO	RO	RO	RO	RO	RO	RO	RO	RO	RO	RO	RO	RO	RO	RO	RO
Reset	0	0	0	0	0	0	0	0	0	0	0	0	0	0	0	0

	15	14	13	12	11	10	9	8	7	6	5	4	3	2	1	0
	reserved								TEST	CCE	DAR	reserved	EIE	SIE	IE	INIT
Type	RO	RO	RO	RO	RO	RO	RO	RO	R/W	R/W	R/W	RO	R/W	R/W	R/W	R/W
Reset	0	0	0	0	0	0	0	0	0	0	0	0	0	0	0	1

Bit/Field	Name	Type	Reset	Description
31:8	reserved	RO	0x0000.00	Software should not rely on the value of a reserved bit. To provide compatibility with future products, the value of a reserved bit should be preserved across a read-modify-write operation.
7	TEST	R/W	0	Test Mode Enable 0: Normal operation 1: Test mode
6	CCE	R/W	0	Configuration Change Enable 0: Do not allow write access to the **CANBIT** register. 1: Allow write access to the **CANBIT** register if the `INIT` bit is 1.
5	DAR	R/W	0	Disable Automatic-Retransmission 0: Auto-retransmission of disturbed messages is enabled. 1: Auto-retransmission is disabled.
4	reserved	RO	0	Software should not rely on the value of a reserved bit. To provide compatibility with future products, the value of a reserved bit should be preserved across a read-modify-write operation.
3	EIE	R/W	0	Error Interrupt Enable 0: Disabled. No error status interrupt is generated. 1: Enabled. A change in the `BOFF` or `EWARN` bits in the **CANSTS** register generates an interrupt.

Bit/Field	Name	Type	Reset	Description
2	SIE	R/W	0	Status Interrupt Enable 0: Disabled. No status interrupt is generated. 1: Enabled. An interrupt is generated when a message has successfully been transmitted or received, or a CAN bus error has been detected. A change in the TX0K, RX0K or LEC bits in the **CANSTS** register generates an interrupt.
1	IE	R/W	0	CAN Interrupt Enable 0: Interrupts disabled. 1: Interrupts enabled.
0	INIT	R/W	1	Initialization 0: Normal operation. 1: Initialization started.

Register 2: CAN Status (CANSTS), offset 0x004

The status register contains information for interrupt servicing such as Bus-Off, error count threshold, and error types.

The LEC field holds the code that indicates the type of the last error to occur on the CAN bus. This field is cleared when a message has been transferred (reception or transmission) without error. The unused error code 7 may be written by the CPU to manually set this field to an invalid error so that it can be checked for a change later.

An error interrupt is generated by the BOFF and EWARN bits and a status interrupt is generated by the RXOK, TXOK, and LEC bits, if the corresponding enable bits in the **CAN Control (CANCTL)** register are set. A change of the EPASS bit or a write to the RXOK, TXOK, or LEC bits does not generate an interrupt.

Reading the **CAN Status (CANSTS)** register clears the **CAN Interrupt (CANINT)** register, if it is pending.

CAN Status (CANSTS)

CAN0 base: 0x4004.0000
Offset 0x004
Type R/W, reset 0x0000.0000

	31	30	29	28	27	26	25	24	23	22	21	20	19	18	17	16
	reserved															
Type	RO	RO	RO	RO	RO	RO	RO	RO	RO	RO	RO	RO	RO	RO	RO	RO
Reset	0	0	0	0	0	0	0	0	0	0	0	0	0	0	0	0

	15	14	13	12	11	10	9	8	7	6	5	4	3	2	1	0
	reserved								BOFF	EWARN	EPASS	RXOK	TXOK	LEC		
Type	RO	RO	RO	RO	RO	RO	RO	RO	RO	RO	RO	R/W	R/W	R/W	R/W	R/W
Reset	0	0	0	0	0	0	0	0	0	0	0	0	0	0	0	0

Bit/Field	Name	Type	Reset	Description
31:8	reserved	RO	0x0000.00	Software should not rely on the value of a reserved bit. To provide compatibility with future products, the value of a reserved bit should be preserved across a read-modify-write operation.
7	BOFF	RO	0	Bus-Off Status 0: CAN controller is not in bus-off state. 1: CAN controller is in bus-off state.
6	EWARN	RO	0	Warning Status 0: Both error counters are below the error warning limit of 96. 1: At least one of the error counters has reached the error warning limit of 96.
5	EPASS	RO	0	Error Passive 0: The CAN module is in the Error Active state, that is, the receive or transmit error count is less than or equal to 127. 1: The CAN module is in the Error Passive state, that is, the receive or transmit error count is greater than 127.

Bit/Field	Name	Type	Reset	Description
4	RXOK	R/W	0	Received a Message Successfully 0: Since this bit was last cleared, no message has been successfully received. 1: Since this bit was last cleared, a message has been successfully received, independent of the result of the acceptance filtering. This bit is never cleared by the CAN module.
3	TXOK	R/W	0	Transmitted a Message Successfully 0: Since this bit was last cleared, no message has been successfully transmitted. 1: Since this bit was last cleared, a message has been successfully transmitted error-free and acknowledged by at least one other node. This bit is never cleared by the CAN module.

Bit/Field	Name	Type	Reset	Description
2:0	LEC	R/W	0x0	Last Error Code This is the type of the last error to occur on the CAN bus. Value Definition 0x0 No Error 0x1 Stuff Error More than 5 equal bits in a sequence have occurred in a part of a received message where this is not allowed. 0x2 Format Error A fixed format part of the received frame has the wrong format. 0x3 ACK Error The message transmitted was not acknowledged by another node. 0x4 Bit 1 Error When a message is transmitted, the CAN controller monitors the data lines to detect any conflicts. When the arbitration field is transmitted, data conflicts are a part of the arbitration protocol. When other frame fields are transmitted, data conflicts are considered errors. A Bit 1 Error indicates that the device wanted to send a High level (logical 1) but the monitored bus value was Low (logical 0). 0x5 Bit 0 Error A Bit 0 Error indicates that the device wanted to send a Low level (logical 0), but the monitored bus value was High (logical 1). During bus-off recovery, this status is set each time a sequence of 11 High bits has been monitored. This enables the CPU to monitor the proceeding of the bus-off recovery sequence without any disturbances to the bus. 0x6 CRC Error The CRC checksum was incorrect in the received message, indicating that the calculated value received did not match the calculated CRC of the data. 0x7 Unused When the LEC bit shows this value, no CAN bus event was detected since the CPU wrote this value to LEC.

Register 3: CAN Error Counter (CANERR), offset 0x008

This register contains the error counter values, which can be used to analyze the cause of an error.

CAN Error Counter (CANERR)

CAN0 base: 0x4004.0000
Offset 0x008
Type RO, reset 0x0000.0000

	31	30	29	28	27	26	25	24	23	22	21	20	19	18	17	16
	reserved															
Type	RO	RO	RO	RO	RO	RO	RO	RO	RO	RO	RO	RO	RO	RO	RO	RO
Reset	0	0	0	0	0	0	0	0	0	0	0	0	0	0	0	0

	15	14	13	12	11	10	9	8	7	6	5	4	3	2	1	0
	RP	REC							TEC							
Type	RO	RO	RO	RO	RO	RO	RO	RO	RO	RO	RO	RO	RO	RO	RO	RO
Reset	0	0	0	0	0	0	0	0	0	0	0	0	0	0	0	0

Bit/Field	Name	Type	Reset	Description
31:16	reserved	RO	0x0000	Software should not rely on the value of a reserved bit. To provide compatibility with future products, the value of a reserved bit should be preserved across a read-modify-write operation.
15	RP	RO	0	Received Error Passive 0: The Receive Error counter is below the Error Passive level (127 or less). 1: The Receive Error counter has reached the Error Passive level (128 or greater).
14:8	REC	RO	0x00	Receive Error Counter State of the receiver error counter (0 to 127).
7:0	TEC	RO	0x00	Transmit Error Counter State of the transmit error counter (0 to 255).

Register 4: CAN Bit Timing (CANBIT), offset 0x00C

This register is used to program the bit width and bit quantum. Values are programmed to the system clock frequency. This register is write-enabled by setting the `CCE` and `INIT` bits in the **CANCTL** register. See “Bit Time and Bit Rate” on page 445 for more information.

CAN Bit Timing (CANBIT)

CAN0 base: 0x4004.0000
Offset 0x00C
Type R/W, reset 0x0000.2301

	31	30	29	28	27	26	25	24	23	22	21	20	19	18	17	16
	reserved															
Type	RO	RO	RO	RO	RO	RO	RO	RO	RO	RO	RO	RO	RO	RO	RO	RO
Reset	0	0	0	0	0	0	0	0	0	0	0	0	0	0	0	0

	15	14	13	12	11	10	9	8	7	6	5	4	3	2	1	0
	reserved	TSEG2			TSEG1				SJW		BRP					
Type	RO	R/W	R/W	R/W	R/W	R/W	R/W	R/W	R/W	R/W	R/W	R/W	R/W	R/W	R/W	R/W
Reset	0	0	1	0	0	0	1	1	0	0	0	0	0	0	0	1

Bit/Field	Name	Type	Reset	Description
31:15	reserved	RO	0x0000	Software should not rely on the value of a reserved bit. To provide compatibility with future products, the value of a reserved bit should be preserved across a read-modify-write operation.
14:12	TSEG2	R/W	0x2	Time Segment after Sample Point 0x00-0x07: The actual interpretation by the hardware of this value is such that one more than the value programmed here is used. So, for example, a reset value of 0x2 defines that there is 3 (2+1) bit time quanta defined for `Phase_Seg2` (see Figure 16-4 on page 446). The bit time quanta is defined by the `BRP` field.
11:8	TSEG1	R/W	0x3	Time Segment Before Sample Point 0x00-0x0F: The actual interpretation by the hardware of this value is such that one more than the value programmed here is used. So, for example, the reset value of 0x3 defines that there is 4 (3+1) bit time quanta defined for `Phase_Seg1` (see Figure 16-4 on page 446). The bit time quanta is define by the `BRP` field.
7:6	SJW	R/W	0x0	(Re)Synchronization Jump Width 0x00-0x03: The actual interpretation by the hardware of this value is such that one more than the value programmed here is used. During the start of frame (SOF), if the CAN controller detects a phase error (misalignment), it can adjust the length of `TSEG2` or `TSEG1` by the value in `SJW`. So the reset value of 0 adjusts the length by 1 bit time quanta.

Bit/Field	Name	Type	Reset	Description
5:0	BRP	R/W	0x1	Baud Rate Prescaler The value by which the oscillator frequency is divided for generating the bit time quanta. The bit time is built up from a multiple of this quantum. 0x00-0x03F: The actual interpretation by the hardware of this value is such that one more than the value programmed here is used. BRP defines the number of CAN clock periods that make up 1 bit time quanta, so the reset value is 2 bit time quanta (1+1). The **CANBRPE** register can be used to further divide the bit time.

Register 5: CAN Interrupt (CANINT), offset 0x010

This register indicates the source of the interrupt.

If several interrupts are pending, the **CAN Interrupt (CANINT)** register points to the pending interrupt with the highest priority, disregarding the order in which the interrupts occurred. An interrupt remains pending until the CPU has cleared it. If the `INTID` field is not 0x0000 (the default) and the `IE` bit in the **CANCTL** register is set, the interrupt is active. The interrupt line remains active until the `INTID` field is cleared by reading the **CANSTS** register, or until the `IE` bit in the **CANCTL** register is cleared.

Note: Reading the **CAN Status (CANSTS)** register clears the **CAN Interrupt (CANINT)** register, if it is pending.

CAN Interrupt (CANINT)

CAN0 base: 0x4004.0000
Offset 0x010
Type RO, reset 0x0000.0000

	31	30	29	28	27	26	25	24	23	22	21	20	19	18	17	16
	reserved															
Type	RO	RO	RO	RO	RO	RO	RO	RO	RO	RO	RO	RO	RO	RO	RO	RO
Reset	0	0	0	0	0	0	0	0	0	0	0	0	0	0	0	0

	15	14	13	12	11	10	9	8	7	6	5	4	3	2	1	0
	INTID															
Type	RO	RO	RO	RO	RO	RO	RO	RO	RO	RO	RO	RO	RO	RO	RO	RO
Reset	0	0	0	0	0	0	0	0	0	0	0	0	0	0	0	0

Bit/Field	Name	Type	Reset	Description
31:16	reserved	RO	0x0000	Software should not rely on the value of a reserved bit. To provide compatibility with future products, the value of a reserved bit should be preserved across a read-modify-write operation.
15:0	INTID	RO	0x0000	Interrupt Identifier The number in this field indicates the source of the interrupt.

Value	Definition
0x0000	No interrupt pending
0x0001-0x0020	Number of the message object that caused the interrupt
0x0021-0x7FFF	Unused
0x8000	Status Interrupt
0x8001-0xFFFF	Unused

Register 6: CAN Test (CANTST), offset 0x014

This is the test mode register for self-test and external pin access. It is write-enabled by setting the TEST bit in the **CANCTL** register. Different test functions may be combined, however, CAN transfers will be affected if the TX bits in this register are not zero.

CAN Test (CANTST)

CAN0 base: 0x4004.0000
Offset 0x014
Type R/W, reset 0x0000.0000

	31	30	29	28	27	26	25	24	23	22	21	20	19	18	17	16
	reserved															
Type	RO	RO	RO	RO	RO	RO	RO	RO	RO	RO	RO	RO	RO	RO	RO	RO
Reset	0	0	0	0	0	0	0	0	0	0	0	0	0	0	0	0

	15	14	13	12	11	10	9	8	7	6	5	4	3	2	1	0
	reserved								RX	TX		LBACK	SILENT	BASIC	reserved	
Type	RO	RO	RO	RO	RO	RO	RO	RO	RO	R/W	R/W	R/W	R/W	R/W	RO	RO
Reset	0	0	0	0	0	0	0	0	0	0	0	0	0	0	0	0

Bit/Field	Name	Type	Reset	Description
31:8	reserved	RO	0x0000.00	Software should not rely on the value of a reserved bit. To provide compatibility with future products, the value of a reserved bit should be preserved across a read-modify-write operation.
7	RX	RO	0	Receive Observation Displays the value on the CANnRx pin.
6:5	TX	R/W	0x0	Transmit Control Overrides control of the CANnTx pin. Value Description 0x0 CANnTx is controlled by the CAN module; default operation 0x1 The sample point is driven on the CANnTx signal. This mode is useful to monitor bit timing. 0x2 CANnTx drives a low value. This mode is useful for checking the physical layer of the CAN bus. 0x3 CANnTx drives a high value. This mode is useful for checking the physical layer of the CAN bus.
4	LBACK	R/W	0	Loopback Mode 0: Disabled. 1: Enabled. In loopback mode, the data from the transmitter is routed into the receiver. Any data on the receive input is ignored.
3	SILENT	R/W	0	Silent Mode Do not transmit data; monitor the bus. Also known as Bus Monitor mode. 0: Disabled. 1: Enabled.

Bit/Field	Name	Type	Reset	Description
2	BASIC	R/W	0	Basic Mode 0: Disabled. 1: Use **CANIF1** registers as transmit buffer, and use **CANIF2** registers as receive buffer.
1:0	reserved	RO	0x0	Software should not rely on the value of a reserved bit. To provide compatibility with future products, the value of a reserved bit should be preserved across a read-modify-write operation.

Register 7: CAN Baud Rate Prescaler Extension (CANBRPE), offset 0x018

This register is used to further divide the bit time set with the BRP bit in the **CANBIT** register. It is write-enabled by setting the CCE bit in the **CANCTL** register.

CAN Baud Rate Prescaler Extension (CANBRPE)

CAN0 base: 0x4004.0000
Offset 0x018
Type R/W, reset 0x0000.0000

	31	30	29	28	27	26	25	24	23	22	21	20	19	18	17	16
	reserved															
Type	RO	RO	RO	RO	RO	RO	RO	RO	RO	RO	RO	RO	RO	RO	RO	RO
Reset	0	0	0	0	0	0	0	0	0	0	0	0	0	0	0	0

	15	14	13	12	11	10	9	8	7	6	5	4	3	2	1	0
	reserved												BRPE			
Type	RO	RO	RO	RO	RO	RO	RO	RO	RO	RO	RO	RO	R/W	R/W	R/W	R/W
Reset	0	0	0	0	0	0	0	0	0	0	0	0	0	0	0	0

Bit/Field	Name	Type	Reset	Description
31:4	reserved	RO	0x0000.000	Software should not rely on the value of a reserved bit. To provide compatibility with future products, the value of a reserved bit should be preserved across a read-modify-write operation.
3:0	BRPE	R/W	0x0	Baud Rate Prescaler Extension 0x00-0x0F: Extend the BRP bit in the **CANBIT** register to values up to 1023. The actual interpretation by the hardware is one more than the value programmed by BRPE (MSBs) and BRP (LSBs).

Register 8: CAN IF1 Command Request (CANIF1CRQ), offset 0x020

Register 9: CAN IF2 Command Request (CANIF2CRQ), offset 0x080

A message transfer is started as soon as there is a write of the message object number to the `MNUM` field when the `TXRQST` bit in the **CANIF1MCTL** register is set. With this write operation, the `BUSY` bit is automatically set to indicate that a transfer between the CAN Interface Registers and the internal message RAM is in progress. After a wait time of 3 to 6 `CAN_CLK` periods, the transfer between the interface register and the message RAM completes, which then clears the `BUSY` bit.

CAN IF1 Command Request (CANIF1CRQ)

CAN0 base: 0x4004.0000
Offset 0x020
Type R/W, reset 0x0000.0001

	31	30	29	28	27	26	25	24	23	22	21	20	19	18	17	16
	reserved															
Type	RO	RO	RO	RO	RO	RO	RO	RO	RO	RO	RO	RO	RO	RO	RO	RO
Reset	0	0	0	0	0	0	0	0	0	0	0	0	0	0	0	0

	15	14	13	12	11	10	9	8	7	6	5	4	3	2	1	0
	BUSY	reserved									MNUM					
Type	RO	RO	RO	RO	RO	RO	RO	RO	RO	RO	R/W	R/W	R/W	R/W	R/W	R/W
Reset	0	0	0	0	0	0	0	0	0	0	0	0	0	0	0	1

Bit/Field	Name	Type	Reset	Description
31:16	reserved	RO	0x0000	Software should not rely on the value of a reserved bit. To provide compatibility with future products, the value of a reserved bit should be preserved across a read-modify-write operation.
15	BUSY	RO	0	Busy Flag 0: Cleared when read/write action has finished. 1: Set when a write occurs to the message number in this register.
14:6	reserved	RO	0x00	Software should not rely on the value of a reserved bit. To provide compatibility with future products, the value of a reserved bit should be preserved across a read-modify-write operation.
5:0	MNUM	R/W	0x01	Message Number Selects one of the 32 message objects in the message RAM for data transfer. The message objects are numbered from 1 to 32. Value — Description 0x00 — 0 is not a valid message number; it is interpreted as 0x20, or object 32. 0x01-0x20 — Indicates specified message object 1 to 32. 0x21-0x3F — Not a valid message number; values are shifted and it is interpreted as 0x01-0x1F.

Register 10: CAN IF1 Command Mask (CANIF1CMSK), offset 0x024

Register 11: CAN IF2 Command Mask (CANIF2CMSK), offset 0x084

Reading the Command Mask registers provides status for various functions. Writing to the Command Mask registers specifies the transfer direction and selects which buffer registers are the source or target of the data transfer.

Note that when a read from the message object buffer occurs when the `WRNRD` bit is clear and the `CLRINTPND` and/or `NEWDAT` bits are set, the interrupt pending and/or new data flags in the message object buffer are cleared.

CAN IF1 Command Mask (CANIF1CMSK)

CAN0 base: 0x4004.0000
Offset 0x024
Type R/W, reset 0x0000.0000

	31	30	29	28	27	26	25	24	23	22	21	20	19	18	17	16
	reserved															
Type	RO	RO	RO	RO	RO	RO	RO	RO	RO	RO	RO	RO	RO	RO	RO	RO
Reset	0	0	0	0	0	0	0	0	0	0	0	0	0	0	0	0

	15	14	13	12	11	10	9	8	7	6	5	4	3	2	1	0
	reserved								WRNRD	MASK	ARB	CONTROL	CLRINTPND	NEWDAT / TXRQST	DATAA	DATAB
Type	RO	RO	RO	RO	RO	RO	RO	RO	R/W	R/W	R/W	R/W	R/W	R/W	R/W	R/W
Reset	0	0	0	0	0	0	0	0	0	0	0	0	0	0	0	0

Bit/Field	Name	Type	Reset	Description
31:8	reserved	RO	0x0000.00	Software should not rely on the value of a reserved bit. To provide compatibility with future products, the value of a reserved bit should be preserved across a read-modify-write operation.
7	WRNRD	R/W	0	Write, Not Read Transfer the message object address specified by the **CAN Command Request (CANIFnCRQ)** register to the CAN message buffer registers. **Note:** Interrupt pending and new data conditions in the message buffer can be cleared by reading from the buffer (`WRNRD` = 0) when the `CLRINTPND` and/or `NEWDAT` bits are set.
6	MASK	R/W	0	Access Mask Bits 0: Mask bits unchanged. 1: Transfer `IDMASK` + `DIR` + `MXTD` of the message object into the Interface registers.
5	ARB	R/W	0	Access Arbitration Bits 0: Arbitration bits unchanged. 1: Transfer `ID` + `DIR` + `XTD` + `MSGVAL` of the message object into the Interface registers.
4	CONTROL	R/W	0	Access Control Bits 0: Control bits unchanged. 1: Transfer control bits from the **CANIFnMCTL** register into the Interface registers.

Bit/Field	Name	Type	Reset	Description
3	CLRINTPND	R/W	0	Clear Interrupt Pending Bit If `WRNRD` is set, this bit controls whether the `INTPND` bit in the **CANIFnMCTL** register is changed. 0: The `INTPND` bit in the message object remains unchanged. 1: The `INTPND` bit is cleared in the message object. If `WRNRD` is clear and this bit is clear, the interrupt pending status is transferred from the message buffer into the **CANIFnMCTL** register. If `WRNRD` is clear and this bit is set, the interrupt pending status is cleared in the message buffer. Note that the value of this bit that is transferred to the **CANIFnMCTL** register always reflects the status of the bits before clearing.
2	NEWDAT / TXRQST	R/W	0	NEWDAT / TXRQST Bit If `WRNRD` is set, this bit can act as a `TXRQST` bit and request a transmission. Note that when this bit is set, the `TXRQST` bit in the **CANIFnMCTL** register is ignored. 0: Transmission is not requested 1: Begin a transmission If `WRNRD` is clear and this bit is clear, the value of the new data status is transferred from the message buffer into the **CANIFnMCTL** register. If `WRNRD` is clear and this bit is set, the new data status is cleared in the message buffer. Note that the value of this bit that is transferred to the **CANIFnMCTL** register always reflects the status of the bits before clearing.
1	DATAA	R/W	0	Access Data Byte 0 to 3 When `WRNRD = 1`: 0: Data bytes 0-3 are unchanged. 1: Transfer data bytes 0-3 in message object to **CANIFnDA1** and **CANIFnDA2**. When `WRNRD = 0`: 0: Data bytes 0-3 are unchanged. 1: Transfer data bytes 0-3 in **CANIFnDA1** and **CANIFnDA2** to the message object.
0	DATAB	R/W	0	Access Data Byte 4 to 7 When `WRNRD = 1`: 0: Data bytes 4-7 are unchanged. 1: Transfer data bytes 4-7 in message object to **CANIFnDB1** and **CANIFnDB2**. When `WRNRD = 0`: 0: Data bytes 4-7 are unchanged. 1: Transfer data bytes 4-7 in **CANIFnDB1** and **CANIFnDB2** to the message object.

Register 12: CAN IF1 Mask 1 (CANIF1MSK1), offset 0x028

Register 13: CAN IF2 Mask 1 (CANIF2MSK1), offset 0x088

The mask information provided in this register accompanies the data (**CANIFnDAn**), arbitration information (**CANIFnARBn**), and control information (**CANIFnMCTL**) to the message object in the message RAM. The mask is used with the `ID` bit in the **CANIFnARBn** register for acceptance filtering. Additional mask information is contained in the **CANIFnMSK2** register.

CAN IF1 Mask 1 (CANIF1MSK1)

CAN0 base: 0x4004.0000
Offset 0x028
Type R/W, reset 0x0000.FFFF

	31	30	29	28	27	26	25	24	23	22	21	20	19	18	17	16
	reserved															
Type	RO	RO	RO	RO	RO	RO	RO	RO	RO	RO	RO	RO	RO	RO	RO	RO
Reset	0	0	0	0	0	0	0	0	0	0	0	0	0	0	0	0

	15	14	13	12	11	10	9	8	7	6	5	4	3	2	1	0
	MSK															
Type	R/W	R/W	R/W	R/W	R/W	R/W	R/W	R/W	R/W	R/W	R/W	R/W	R/W	R/W	R/W	R/W
Reset	1	1	1	1	1	1	1	1	1	1	1	1	1	1	1	1

Bit/Field	Name	Type	Reset	Description
31:16	reserved	RO	0x0000	Software should not rely on the value of a reserved bit. To provide compatibility with future products, the value of a reserved bit should be preserved across a read-modify-write operation.
15:0	MSK	R/W	0xFFFF	Identifier Mask When using a 29-bit identifier, these bits are used for bits [15:0] of the ID. The `MSK` field in the **CANIFnMSK2** register are used for bits [28:16] of the ID. When using an 11-bit identifier, these bits are ignored. 0: The corresponding identifier field (`ID`) in the message object cannot inhibit the match in acceptance filtering. 1: The corresponding identifier field (`ID`) is used for acceptance filtering.

Register 14: CAN IF1 Mask 2 (CANIF1MSK2), offset 0x02C

Register 15: CAN IF2 Mask 2 (CANIF2MSK2), offset 0x08C

This register holds extended mask information that accompanies the **CANIFnMSK1** register.

CAN IF1 Mask 2 (CANIF1MSK2)

CAN0 base: 0x4004.0000
Offset 0x02C
Type R/W, reset 0x0000.FFFF

	31	30	29	28	27	26	25	24	23	22	21	20	19	18	17	16
	reserved															
Type	RO	RO	RO	RO	RO	RO	RO	RO	RO	RO	RO	RO	RO	RO	RO	RO
Reset	0	0	0	0	0	0	0	0	0	0	0	0	0	0	0	0

	15	14	13	12	11	10	9	8	7	6	5	4	3	2	1	0
	MXTD	MDIR	reserved	MSK												
Type	R/W	R/W	RO	R/W	R/W	R/W	R/W	R/W	R/W	R/W	R/W	R/W	R/W	R/W	R/W	R/W
Reset	1	1	1	0	0	0	0	0	1	1	1	1	1	1	1	1

Bit/Field	Name	Type	Reset	Description
31:16	reserved	RO	0x0000	Software should not rely on the value of a reserved bit. To provide compatibility with future products, the value of a reserved bit should be preserved across a read-modify-write operation.
15	MXTD	R/W	0x1	Mask Extended Identifier 0: The extended identifier bit (`XTD` in the **CANIFnARB2** register) has no effect on the acceptance filtering. 1: The extended identifier bit `XTD` is used for acceptance filtering.
14	MDIR	R/W	0x1	Mask Message Direction 0: The message direction bit (`DIR` in the **CANIFnARB2** register) has no effect for acceptance filtering. 1: The message direction bit `DIR` is used for acceptance filtering.
13	reserved	RO	0x1	Software should not rely on the value of a reserved bit. To provide compatibility with future products, the value of a reserved bit should be preserved across a read-modify-write operation.
12:0	MSK	R/W	0xFF	Identifier Mask When using a 29-bit identifier, these bits are used for bits [28:16] of the ID. The `MSK` field in the **CANIFnMSK1** register are used for bits [15:0] of the ID. When using an 11-bit identifier, `MSK[12:2]` are used for bits [10:0] of the ID. 0: The corresponding identifier field (`ID`) in the message object cannot inhibit the match in acceptance filtering. 1: The corresponding identifier field (`ID`) is used for acceptance filtering.

Register 16: CAN IF1 Arbitration 1 (CANIF1ARB1), offset 0x030

Register 17: CAN IF2 Arbitration 1 (CANIF2ARB1), offset 0x090

These registers hold the identifiers for acceptance filtering.

CAN IF1 Arbitration 1 (CANIF1ARB1)

CAN0 base: 0x4004.0000
Offset 0x030
Type R/W, reset 0x0000.0000

	31	30	29	28	27	26	25	24	23	22	21	20	19	18	17	16
	reserved															
Type	RO	RO	RO	RO	RO	RO	RO	RO	RO	RO	RO	RO	RO	RO	RO	RO
Reset	0	0	0	0	0	0	0	0	0	0	0	0	0	0	0	0

	15	14	13	12	11	10	9	8	7	6	5	4	3	2	1	0
	ID															
Type	R/W	R/W	R/W	R/W	R/W	R/W	R/W	R/W	R/W	R/W	R/W	R/W	R/W	R/W	R/W	R/W
Reset	0	0	0	0	0	0	0	0	0	0	0	0	0	0	0	0

Bit/Field	Name	Type	Reset	Description
31:16	reserved	RO	0x0000	Software should not rely on the value of a reserved bit. To provide compatibility with future products, the value of a reserved bit should be preserved across a read-modify-write operation.
15:0	ID	R/W	0x0000	Message Identifier This bit field is used with the `ID` field in the **CANIFnARB2** register to create the message identifier. When using a 29-bit identifier, bits 15:0 of the **CANIFnARB1** register are [15:0] of the ID, while bits 12:0 of the **CANIFnARB2** register are [28:16] of the ID. When using an 11-bit identifier, these bits are not used.

Register 18: CAN IF1 Arbitration 2 (CANIF1ARB2), offset 0x034

Register 19: CAN IF2 Arbitration 2 (CANIF2ARB2), offset 0x094

These registers hold information for acceptance filtering.

CAN IF1 Arbitration 2 (CANIF1ARB2)

CAN0 base: 0x4004.0000
Offset 0x034
Type R/W, reset 0x0000.0000

	31	30	29	28	27	26	25	24	23	22	21	20	19	18	17	16
	reserved															
Type	RO	RO	RO	RO	RO	RO	RO	RO	RO	RO	RO	RO	RO	RO	RO	RO
Reset	0	0	0	0	0	0	0	0	0	0	0	0	0	0	0	0

	15	14	13	12	11	10	9	8	7	6	5	4	3	2	1	0
	MSGVAL	XTD	DIR	ID												
Type	R/W	R/W	R/W	R/W	R/W	R/W	R/W	R/W	R/W	R/W	R/W	R/W	R/W	R/W	R/W	R/W
Reset	0	0	0	0	0	0	0	0	0	0	0	0	0	0	0	0

Bit/Field	Name	Type	Reset	Description
31:16	reserved	RO	0x0000	Software should not rely on the value of a reserved bit. To provide compatibility with future products, the value of a reserved bit should be preserved across a read-modify-write operation.
15	MSGVAL	R/W	0	Message Valid 0: The message object is ignored by the message handler. 1: The message object is configured and ready to be considered by the message handler within the CAN controller. All unused message objects should have this bit cleared during initialization and before clearing the `INIT` bit in the **CANCTL** register. The `MSGVAL` bit must also be cleared before any of the following bits are modified or if the message object is no longer required: the `ID` fields in the **CANIFnARBn** registers, the `XTD` and `DIR` bits in the **CANIFnARB2** register, or the `DLC` field in the **CANIFnMCTL** register.
14	XTD	R/W	0	Extended Identifier 0: An 11-bit Standard Identifier is used for this message object. 1: A 29-bit Extended Identifier is used for this message object.
13	DIR	R/W	0	Message Direction 0: Receive. When the `TXRQST` bit in the **CANIFnMCTL** register is set, a remote frame with the identifier of this message object is received. On reception of a data frame with matching identifier, that message is stored in this message object. 1: Transmit. When the `TXRQST` bit in the **CANIFnMCTL** register is set, the respective message object is transmitted as a data frame. On reception of a remote frame with matching identifier, the `TXRQST` bit of this message object is set (if `RMTEN=1`).

Bit/Field	Name	Type	Reset	Description
12:0	ID	R/W	0x000	Message Identifier This bit field is used with the `ID` field in the **CANIFnARB2** register to create the message identifier. When using a 29-bit identifier, `ID[15:0]` of the **CANIFnARB1** register are [15:0] of the ID, while these bits, `ID[12:0]`, are [28:16] of the ID. When using an 11-bit identifier, `ID[12:2]` are used for bits [10:0] of the ID. The `ID` field in the **CANIFnARB1** register is ignored.

Register 20: CAN IF1 Message Control (CANIF1MCTL), offset 0x038

Register 21: CAN IF2 Message Control (CANIF2MCTL), offset 0x098

This register holds the control information associated with the message object to be sent to the Message RAM.

CAN IF1 Message Control (CANIF1MCTL)

CAN0 base: 0x4004.0000
Offset 0x038
Type R/W, reset 0x0000.0000

	31	30	29	28	27	26	25	24	23	22	21	20	19	18	17	16
	reserved															
Type	RO	RO	RO	RO	RO	RO	RO	RO	RO	RO	RO	RO	RO	RO	RO	RO
Reset	0	0	0	0	0	0	0	0	0	0	0	0	0	0	0	0

	15	14	13	12	11	10	9	8	7	6	5	4	3	2	1	0
	NEWDAT	MSGLST	INTPND	UMASK	TXIE	RXIE	RMTEN	TXRQST	EOB	reserved			DLC			
Type	R/W	R/W	R/W	R/W	R/W	R/W	R/W	R/W	R/W	RO	RO	RO	R/W	R/W	R/W	R/W
Reset	0	0	0	0	0	0	0	0	0	0	0	0	0	0	0	0

Bit/Field	Name	Type	Reset	Description
31:16	reserved	RO	0x0000	Software should not rely on the value of a reserved bit. To provide compatibility with future products, the value of a reserved bit should be preserved across a read-modify-write operation.
15	NEWDAT	R/W	0	New Data 0: No new data has been written into the data portion of this message object by the message handler since the last time this flag was cleared by the CPU. 1: The message handler or the CPU has written new data into the data portion of this message object.
14	MSGLST	R/W	0	Message Lost 0 : No message was lost since the last time this bit was cleared by the CPU. 1: The message handler stored a new message into this object when `NEWDAT` was set; the CPU has lost a message. This bit is only valid for message objects when the `DIR` bit in the **CANIFnARB2** register clear (receive).
13	INTPND	R/W	0	Interrupt Pending 0: This message object is not the source of an interrupt. 1: This message object is the source of an interrupt. The interrupt identifier in the **CANINT** register points to this message object if there is not another interrupt source with a higher priority.
12	UMASK	R/W	0	Use Acceptance Mask 0: Mask ignored. 1: Use mask (`MSK`, `MXTD`, and `MDIR` bits in the **CANIFnMSKn** registers) for acceptance filtering.

Bit/Field	Name	Type	Reset	Description
11	TXIE	R/W	0	Transmit Interrupt Enable 0: The `INTPND` bit in the **CANIFnMCTL** register is unchanged after a successful transmission of a frame. 1: The `INTPND` bit in the **CANIFnMCTL** register is set after a successful transmission of a frame.
10	RXIE	R/W	0	Receive Interrupt Enable 0: The `INTPND` bit in the **CANIFnMCTL** register is unchanged after a successful reception of a frame. 1: The `INTPND` bit in the **CANIFnMCTL** register is set after a successful reception of a frame.
9	RMTEN	R/W	0	Remote Enable 0: At the reception of a remote frame, the `TXRQST` bit in the **CANIFnMCTL** register is left unchanged. 1: At the reception of a remote frame, the `TXRQST` bit in the **CANIFnMCTL** register is set.
8	TXRQST	R/W	0	Transmit Request 0: This message object is not waiting for transmission. 1: The transmission of this message object is requested and is not yet done.
7	EOB	R/W	0	End of Buffer 0: Message object belongs to a FIFO Buffer and is not the last message object of that FIFO Buffer. 1: Single message object or last message object of a FIFO Buffer. This bit is used to concatenate two or more message objects (up to 32) to build a FIFO buffer. For a single message object (thus not belonging to a FIFO buffer), this bit must be set.
6:4	reserved	RO	0x0	Software should not rely on the value of a reserved bit. To provide compatibility with future products, the value of a reserved bit should be preserved across a read-modify-write operation.
3:0	DLC	R/W	0x0	Data Length Code Value — Description 0x0-0x8 — Specifies the number of bytes in the data frame. 0x9-0xF — Defaults to a data frame with 8 bytes. The `DLC` field in the **CANIFnMCTL** register of a message object must be defined the same as in all the corresponding objects with the same identifier at other nodes. When the message handler stores a data frame, it writes `DLC` to the value given by the received message.

Register 22: CAN IF1 Data A1 (CANIF1DA1), offset 0x03C

Register 23: CAN IF1 Data A2 (CANIF1DA2), offset 0x040

Register 24: CAN IF1 Data B1 (CANIF1DB1), offset 0x044

Register 25: CAN IF1 Data B2 (CANIF1DB2), offset 0x048

Register 26: CAN IF2 Data A1 (CANIF2DA1), offset 0x09C

Register 27: CAN IF2 Data A2 (CANIF2DA2), offset 0x0A0

Register 28: CAN IF2 Data B1 (CANIF2DB1), offset 0x0A4

Register 29: CAN IF2 Data B2 (CANIF2DB2), offset 0x0A8

These registers contain the data to be sent or that has been received. In a CAN data frame, data byte 0 is the first byte to be transmitted or received and data byte 7 is the last byte to be transmitted or received. In CAN's serial bit stream, the MSB of each byte is transmitted first.

CAN IF1 Data A1 (CANIF1DA1)

CAN0 base: 0x4004.0000
Offset 0x03C
Type R/W, reset 0x0000.0000

	31	30	29	28	27	26	25	24	23	22	21	20	19	18	17	16
	reserved															
Type	RO	RO	RO	RO	RO	RO	RO	RO	RO	RO	RO	RO	RO	RO	RO	RO
Reset	0	0	0	0	0	0	0	0	0	0	0	0	0	0	0	0

	15	14	13	12	11	10	9	8	7	6	5	4	3	2	1	0
	DATA															
Type	R/W	R/W	R/W	R/W	R/W	R/W	R/W	R/W	R/W	R/W	R/W	R/W	R/W	R/W	R/W	R/W
Reset	0	0	0	0	0	0	0	0	0	0	0	0	0	0	0	0

Bit/Field	Name	Type	Reset	Description
31:16	reserved	RO	0x0000	Software should not rely on the value of a reserved bit. To provide compatibility with future products, the value of a reserved bit should be preserved across a read-modify-write operation.
15:0	DATA	R/W	0x0000	Data The **CANIFnDA1** registers contain data bytes 1 and 0; **CANIFnDA2** data bytes 3 and 2; **CANIFnDB1** data bytes 5 and 4; and **CANIFnDB2** data bytes 7 and 6.

Register 30: CAN Transmission Request 1 (CANTXRQ1), offset 0x100

Register 31: CAN Transmission Request 2 (CANTXRQ2), offset 0x104

The **CANTXRQ1** and **CANTXRQ2** registers hold the TXRQST bits of the 32 message objects. By reading out these bits, the CPU can check which message object has a transmission request pending. The TXRQST bit of a specific message object can be changed by three sources: (1) the CPU via the **CANIFnMCTL** register, (2) the message handler state machine after the reception of a remote frame, or (3) the message handler state machine after a successful transmission.

The **CANTXRQ1** register contains the TXRQST bits of the first 16 message objects in the message RAM; the **CANTXRQ2** register contains the TXRQST bits of the second 16 message objects.

CAN Transmission Request 1 (CANTXRQ1)

CAN0 base: 0x4004.0000
Offset 0x100
Type RO, reset 0x0000.0000

	31	30	29	28	27	26	25	24	23	22	21	20	19	18	17	16
	reserved															
Type	RO	RO	RO	RO	RO	RO	RO	RO	RO	RO	RO	RO	RO	RO	RO	RO
Reset	0	0	0	0	0	0	0	0	0	0	0	0	0	0	0	0

	15	14	13	12	11	10	9	8	7	6	5	4	3	2	1	0
	TXRQST															
Type	RO	RO	RO	RO	RO	RO	RO	RO	RO	RO	RO	RO	RO	RO	RO	RO
Reset	0	0	0	0	0	0	0	0	0	0	0	0	0	0	0	0

Bit/Field	Name	Type	Reset	Description
31:16	reserved	RO	0x0000	Software should not rely on the value of a reserved bit. To provide compatibility with future products, the value of a reserved bit should be preserved across a read-modify-write operation.
15:0	TXRQST	RO	0x0000	Transmission Request Bits 0: The corresponding message object is not waiting for transmission. 1: The transmission of the corresponding message object is requested and is not yet done.

Register 32: CAN New Data 1 (CANNWDA1), offset 0x120

Register 33: CAN New Data 2 (CANNWDA2), offset 0x124

The **CANNWDA1** and **CANNWDA2** registers hold the `NEWDAT` bits of the 32 message objects. By reading these bits, the CPU can check which message object has its data portion updated. The `NEWDAT` bit of a specific message object can be changed by three sources: (1) the CPU via the **CANIFnMCTL** register, (2) the message handler state machine after the reception of a data frame, or (3) the message handler state machine after a successful transmission.

The **CANNWDA1** register contains the `NEWDAT` bits of the first 16 message objects in the message RAM; the **CANNWDA2** register contains the `NEWDAT` bits of the second 16 message objects.

CAN New Data 1 (CANNWDA1)

CAN0 base: 0x4004.0000
Offset 0x120
Type RO, reset 0x0000.0000

	31	30	29	28	27	26	25	24	23	22	21	20	19	18	17	16
	reserved															
Type	RO	RO	RO	RO	RO	RO	RO	RO	RO	RO	RO	RO	RO	RO	RO	RO
Reset	0	0	0	0	0	0	0	0	0	0	0	0	0	0	0	0

	15	14	13	12	11	10	9	8	7	6	5	4	3	2	1	0
	NEWDAT															
Type	RO	RO	RO	RO	RO	RO	RO	RO	RO	RO	RO	RO	RO	RO	RO	RO
Reset	0	0	0	0	0	0	0	0	0	0	0	0	0	0	0	0

Bit/Field	Name	Type	Reset	Description
31:16	reserved	RO	0x0000	Software should not rely on the value of a reserved bit. To provide compatibility with future products, the value of a reserved bit should be preserved across a read-modify-write operation.
15:0	NEWDAT	RO	0x0000	New Data Bits 0: No new data has been written into the data portion of the corresponding message object by the message handler since the last time this flag was cleared by the CPU. 1: The message handler or the CPU has written new data into the data portion of the corresponding message object.

Register 34: CAN Message 1 Interrupt Pending (CANMSG1INT), offset 0x140

Register 35: CAN Message 2 Interrupt Pending (CANMSG2INT), offset 0x144

The **CANMSG1INT** and **CANMSG2INT** registers hold the `INTPND` bits of the 32 message objects. By reading these bits, the CPU can check which message object has an interrupt pending. The `INTPND` bit of a specific message object can be changed through two sources: (1) the CPU via the **CANIFnMCTL** register, or (2) the message handler state machine after the reception or transmission of a frame.

This field is also encoded in the **CANINT** register.

The **CANMSG1INT** register contains the `INTPND` bits of the first 16 message objects in the message RAM; the **CANMSG2INT** register contains the `INTPND` bits of the second 16 message objects.

CAN Message 1 Interrupt Pending (CANMSG1INT)

CAN0 base: 0x4004.0000
Offset 0x140
Type RO, reset 0x0000.0000

	31	30	29	28	27	26	25	24	23	22	21	20	19	18	17	16
	reserved															
Type	RO	RO	RO	RO	RO	RO	RO	RO	RO	RO	RO	RO	RO	RO	RO	RO
Reset	0	0	0	0	0	0	0	0	0	0	0	0	0	0	0	0

	15	14	13	12	11	10	9	8	7	6	5	4	3	2	1	0
	INTPND															
Type	RO	RO	RO	RO	RO	RO	RO	RO	RO	RO	RO	RO	RO	RO	RO	RO
Reset	0	0	0	0	0	0	0	0	0	0	0	0	0	0	0	0

Bit/Field	Name	Type	Reset	Description
31:16	reserved	RO	0x0000	Software should not rely on the value of a reserved bit. To provide compatibility with future products, the value of a reserved bit should be preserved across a read-modify-write operation.
15:0	INTPND	RO	0x0000	Interrupt Pending Bits 0: The corresponding message object is not the source of an interrupt. 1: The corresponding message object is the source of an interrupt.

Register 36: CAN Message 1 Valid (CANMSG1VAL), offset 0x160

Register 37: CAN Message 2 Valid (CANMSG2VAL), offset 0x164

The **CANMSG1VAL** and **CANMSG2VAL** registers hold the `MSGVAL` bits of the 32 message objects. By reading these bits, the CPU can check which message object is valid. The message value of a specific message object can be changed with the **CANIFnMCTL** register.

The **CANMSG1VAL** register contains the `MSGVAL` bits of the first 16 message objects in the message RAM; the **CANMSG2VAL** register contains the `MSGVAL` bits of the second 16 message objects in the message RAM.

CAN Message 1 Valid (CANMSG1VAL)

CAN0 base: 0x4004.0000
Offset 0x160
Type RO, reset 0x0000.0000

	31	30	29	28	27	26	25	24	23	22	21	20	19	18	17	16
	reserved															
Type	RO	RO	RO	RO	RO	RO	RO	RO	RO	RO	RO	RO	RO	RO	RO	RO
Reset	0	0	0	0	0	0	0	0	0	0	0	0	0	0	0	0

	15	14	13	12	11	10	9	8	7	6	5	4	3	2	1	0
	MSGVAL															
Type	RO	RO	RO	RO	RO	RO	RO	RO	RO	RO	RO	RO	RO	RO	RO	RO
Reset	0	0	0	0	0	0	0	0	0	0	0	0	0	0	0	0

Bit/Field	Name	Type	Reset	Description
31:16	reserved	RO	0x0000	Software should not rely on the value of a reserved bit. To provide compatibility with future products, the value of a reserved bit should be preserved across a read-modify-write operation.
15:0	MSGVAL	RO	0x0000	Message Valid Bits 0: The corresponding message object is not configured and is ignored by the message handler. 1: The corresponding message object is configured and should be considered by the message handler.

17 Ethernet Controller

The Stellaris® Ethernet Controller consists of a fully integrated media access controller (MAC) and network physical (PHY) interface. The Ethernet Controller conforms to *IEEE 802.3* specifications and fully supports 10BASE-T and 100BASE-TX standards.

The Stellaris® Ethernet Controller module has the following features:

- Conforms to the *IEEE 802.3-2002 specification*
  - 10BASE-T/100BASE-TX IEEE-802.3 compliant. Requires only a dual 1:1 isolation transformer interface to the line
  - 10BASE-T/100BASE-TX ENDEC, 100BASE-TX scrambler/descrambler
  - Full-featured auto-negotiation
- Multiple operational modes
  - Full- and half-duplex 100 Mbps
  - Full- and half-duplex 10 Mbps
  - Power-saving and power-down modes
- Highly configurable
  - Programmable MAC address
  - LED activity selection
  - Promiscuous mode support
  - CRC error-rejection control
  - User-configurable interrupts
- Physical media manipulation
  - Automatic MDI/MDI-X cross-over correction
  - Register-programmable transmit amplitude
  - Automatic polarity correction and 10BASE-T signal reception
- IEEE 1588 Precision Time Protocol - provides highly accurate time stamps for individual packets

17.1 Block Diagram

As shown in Figure 17-1 on page 479, the Ethernet Controller is functionally divided into two layers: the Media Access Controller (MAC) layer and the Network Physical (PHY) layer. These layers correspond to the OSI model layers 2 and 1. The CPU accesses the Ethernet Controller via the MAC layer. The MAC layer provides transmit and receive processing for Ethernet frames. The MAC layer also provides the interface to the PHY layer via an internal Media Independent Interface (MII). The PHY layer communicates with the Ethernet bus.

Figure 17-1. Ethernet Controller

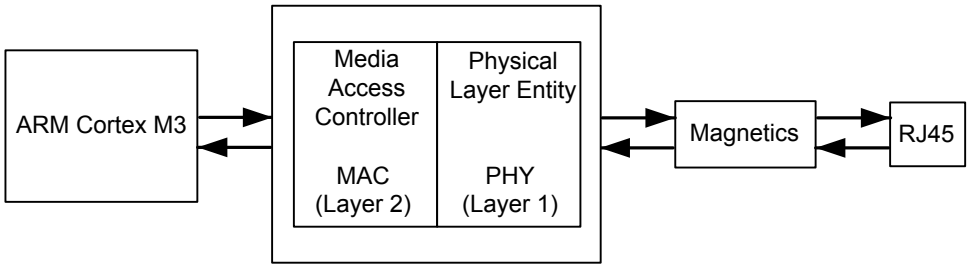

Figure 17-2 on page 479 shows more detail of the internal structure of the Ethernet Controller and how the register set relates to various functions.

Figure 17-2. Ethernet Controller Block Diagram

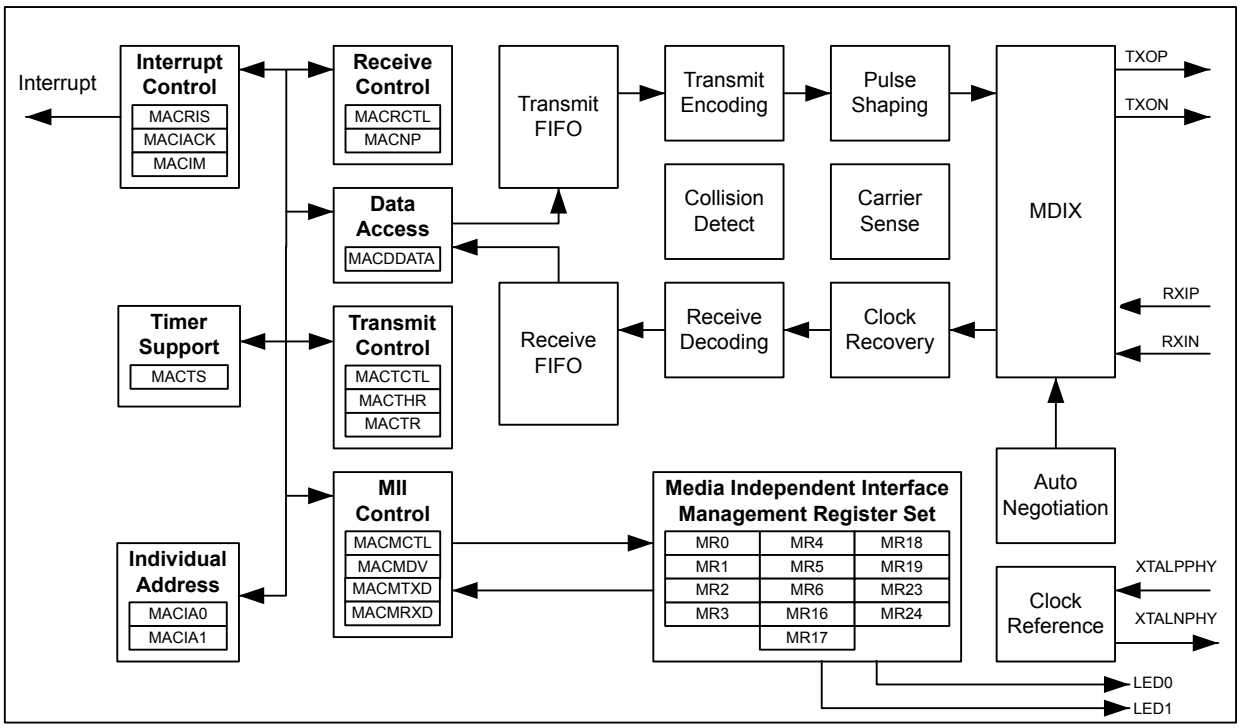

17.2 Functional Description

Note: A 12.4-kΩ resistor should be connected between the `ERBIAS` and ground. The 12.4-kΩ resistor should have a 1% tolerance and should be located in close proximity to the `ERBIAS` pin. Power dissipation in the resistor is low, so a chip resistor of any geometry may be used.

The functional description of the Ethernet Controller is discussed in the following sections.

17.2.1 MAC Operation

The following sections decribe the operation of the MAC unit, including an overview of the Ethernet frame format, the MAC layer FIFOs, Ethernet transmission and reception options, packet timestamps, and LED indicators.

17.2.1.1 Ethernet Frame Format

Ethernet data is carried by Ethernet frames. The basic frame format is shown in Figure 17-3 on page 480.

Figure 17-3. Ethernet Frame

Preamble	SFD	Destination Address	Source Address	Length/ Type	Data	FCS
7 Bytes	1 Byte	6 Bytes	6 Bytes	2 Bytes	46 - 1500 Bytes	4 Bytes

The seven fields of the frame are transmitted from left to right. The bits within the frame are transmitted from least to most significant bit.

- Preamble

  The Preamble field is used to synchronize with the received frame's timing. The preamble is 7 octets long.

- Start Frame Delimiter (SFD)

  The SFD field follows the preamble pattern and indicates the start of the frame. Its value is 1010.1011.

- Destination Address (DA)

  This field specifies destination addresses for which the frame is intended. The LSB (bit 16 of DA oct 1 in the frame, see Table 17-1 on page 481) of the DA determines whether the address is an individual (0), or group/multicast (1) address.

- Source Address (SA)

  The source address field identifies the station from which the frame was initiated.

- Length/Type Field

  The meaning of this field depends on its numeric value. This field can be interpreted as length or type code. The maximum length of the data field is 1500 octets. If the value of the Length/Type field is less than or equal to 1500 decimal, it indicates the number of MAC client data octets. If the value of this field is greater than or equal to 1536 decimal, then it is type interpretation. The meaning of the Length/Type field when the value is between 1500 and 1536 decimal is unspecified by the IEEE 802.3 standard. However, the Ethernet Controller assumes type interpretation if the value of the Length/Type field is greater than 1500 decimal. The definition of the Type field is specified in the IEEE 802.3 standard. The first of the two octets in this field is most significant.

- Data

  The data field is a sequence of octets that is at least 46 in length, up to 1500 in length. Full data transparency is provided so any values can appear in this field. A minimum frame size of 46 octets is required to meet the IEEE standard. If the frame size is too small, the Ethernet Controller automatically appends extra bits (a pad), thus the pad can have a size of 0 to 46 octets. Data padding can be disabled by clearing the PADEN bit in the **Ethernet MAC Transmit Control (MACTCTL)** register.

  For the Ethernet Controller, data sent/received can be larger than 1500 bytes without causing a Frame Too Long error. Instead, a FIFO overrun error is reported using the F0V bit in the

Ethernet MAC Raw Interrupt Status(MACRIS) register when the frame received is too large to fit into the Ethernet Controller's 2K RAM.

- Frame Check Sequence (FCS)

  The frame check sequence carries the cyclic redundancy check (CRC) value. The CRC is computed over the destination address, source address, length/type, and data (including pad) fields using the CRC-32 algorithm. The Ethernet Controller computes the FCS value one nibble at a time. For transmitted frames, this field is automatically inserted by the MAC layer, unless disabled by clearing the CRC bit in the **MACTCTL** register. For received frames, this field is automatically checked. If the FCS does not pass, the frame is not placed in the RX FIFO, unless the FCS check is disabled by clearing the BADCRC bit in the **MACRCTL** register.

17.2.1.2 MAC Layer FIFOs

The Ethernet Controller is capable of simultaneous transmission and reception. This feature is enabled by setting the DUPLEX bit in the **MACTCTL** register.

For Ethernet frame transmission, a 2 KB transmit FIFO is provided that can be used to store a single frame. While the *IEEE 802.3 specification* limits the size of an Ethernet frame's payload section to 1500 Bytes, the Ethernet Controller places no such limit. The full buffer can be used, for a payload of up to 2032 bytes (as the first 16 bytes in the FIFO are reserved for destination address, source address and length/type information).

For Ethernet frame reception, a 2-KB receive FIFO is provided that can be used to store multiple frames, up to a maximum of 31 frames. If a frame is received, and there is insufficient space in the RX FIFO, an overflow error is indicated using the FOV bit in the **MACRIS** register.

For details regarding the TX and RX FIFO layout, refer to Table 17-1 on page 481. Please note the following difference between TX and RX FIFO layout. For the TX FIFO, the Data Length field in the first FIFO word refers to the Ethernet frame data payload, as shown in the 5th to nth FIFO positions. For the RX FIFO, the Frame Length field is the total length of the received Ethernet frame, including the Length/Type bytes and the FCS bits.

If FCS generation is disabled by clearing the CRC bit in the **MACTCTL** register, the last word in the TX FIFO must contain the FCS bytes for the frame that has been written to the FIFO.

Also note that if the length of the data payload section is not a multiple of 4, the FCS field is not be aligned on a word boundary in the FIFO. However, for the RX FIFO the beginning of the next frame is always on a word boundary.

Table 17-1. TX & RX FIFO Organization

FIFO Word Read/Write Sequence	Word Bit Fields	TX FIFO (Write)	RX FIFO (Read)
1st	7:0	Data Length Least Significant Byte	Frame Length Least Significant Byte
	15:8	Data Length Most Significant Byte	Frame Length Most Significant Byte
	23:16	DA oct 1	
	31:24	DA oct 2	
2nd	7:0	DA oct 3	
	15:8	DA oct 4	
	23:16	DA oct 5	
	31:24	DA oct 6	

FIFO Word Read/Write Sequence	Word Bit Fields	TX FIFO (Write)	RX FIFO (Read)
3rd	7:0	SA oct 1	
	15:8	SA oct 2	
	23:16	SA oct 3	
	31:24	SA oct 4	
4th	7:0	SA oct 5	
	15:8	SA oct 6	
	23:16	Len/Type Most Significant Byte	
	31:24	Len/Type Least Significant Byte	
5th to nth	7:0	data oct n	
	15:8	data oct n+1	
	23:16	data oct n+2	
	31:24	data oct n+3	
last	7:0	FCS 1	
	15:8	FCS 2	
	23:16	FCS 3	
	31:24	FCS 4	

Note: If the CRC bit in the **MACTCTL** register is clear, the FCS bytes must be written with the correct CRC. If the CRC bit is set, the Ethernet Controller automatically writes the FCS bytes.

17.2.1.3 Ethernet Transmission Options

At the MAC layer, the transmitter can be configured for both full-duplex and half-duplex operation by using the DUPLEX bit in the **MACTCTL** register.

The Ethernet Controller automatically generates and inserts the Frame Check Sequence (FCS) at the end of the transmit frame when the CRC bit in the **MACTCTL** register is set. However, for test purposes, this feature can be disabled in order to generate a frame with an invalid CRC by clearing the CRC bit.

The *IEEE 802.3 specification* requires that the Ethernet frame payload section be a minimum of 46 bytes. The Ethernet Controller automatically pads the data section if the payload data section loaded into the FIFO is less than the minimum 46 bytes when the PADEN bit in the **MACTCTL** register is set. This feature can be disabled by clearing the PADEN bit.

The transmitter must be enabled by setting the TXEN bit in the **TCTL** register.

17.2.1.4 Ethernet Reception Options

The Ethernet Controller RX FIFO should be cleared during software initialization. The receiver should first be disabled by clearing the RXEN bit in the **Ethernet MAC Receive Control (MACRCTL)** register, then the FIFO can be cleared by setting the RSTFIFO bit in the **MACRCTL** register.

The receiver automatically rejects frames that contain bad CRC values in the FCS field. In this case, a Receive Error interrupt is generated and the receive data is lost. To accept all frames, clear the BADCRC bit in the **MACRCTL** register.

In normal operating mode, the receiver accepts only those frames that have a destination address that matches the address programmed into the **Ethernet MAC Individual Address 0 (MACIA0)** and **Ethernet MAC Individual Address 1 (MACIA1)** registers. However, the Ethernet receiver can

also be configured for Promiscuous and Multicast modes by setting the PRMS and AMUL bits in the **MACRCTL** register.

17.2.1.5 Packet Timestamps

For applications requiring very high-precision synchronization packets, the Ethernet Controller provides a means of generating precision timestamps in support of the IEEE Precision Time Protocol (IEEE-1588). This feature is enabled by setting the TSEN bit in the **Ethernet MAC Timer Support (MATCS)** register. Note that when this feature is enabled, General-Purpose Timer 3 (GPT3) must be dedicated to the Ethernet Controller. GPT3 must be configured to 16-bit edge capture mode, see page 235. Timer A of GPT3 stores the receive time, and Timer B stores the transmit time. One other General-Purpose Timer can be set up as a 16-bit free-running timer to synchronize the receiver and transmitter timers and provide a timestamp with which to compare the timestamps stored in GPT3.

17.2.2 Internal MII Operation

For the MII management interface to function properly, the MDIO signal must be connected through a 10k Ω pull-up resistor to the +3.3 V supply. Failure to connect this pull-up resistor prevents management transactions on this internal MII to function. Note that it is possible for data transmission across the MII to still function since the PHY layer auto-negotiates the link parameters by default.

For the MII management interface to function properly, the internal clock must be divided down from the system clock to a frequency no greater than 2.5 MHz. The **Ethernet MAC Management Divider (MACMDV)** register contains the divider used for scaling down the system clock. See page 502 for more details about the use of this register.

17.2.3 PHY Operation

The Physical Layer (PHY) in the Ethernet Controller includes integrated ENDECs, scrambler/descrambler, dual-speed clock recovery, and full-featured auto-negotiation functions. The transmitter includes an on-chip pulse shaper and a low-power line driver. The receiver has an adaptive equalizer and a baseline restoration circuit required for accurate clock and data recovery. The transceiver interfaces to Category-5 unshielded twisted pair (Cat-5 UTP) cabling for 100BASE-TX applications, and Category-3 unshielded twisted pair (Cat-3 UTP) for 10BASE-T applications. The Ethernet Controller is connected to the line media via dual 1:1 isolation transformers. No external filter is required.

17.2.3.1 Clock Selection

The Ethernet Controller has an on-chip crystal oscillator which can also be driven by an external oscillator. In this mode of operation, a 25-MHz crystal should be connected between the XTALPPHY and XTALNPHY pins. Alternatively, an external 25-MHz clock input can be connected to the XTALPPHY pin. In this mode of operation, a crystal is not required and the XTALNPHY pin must be tied to ground.

17.2.3.2 Auto-Negotiation

The Ethernet Controller supports the auto-negotiation functions of Clause 28 of the *IEEE 802.3* standard for 10/100 Mbps operation over copper wiring. This function is controlled via register settings. The auto-negotiation function is turned on by default, and the ANEGEN bit in the **Ethernet PHY Management Register 0 - Control (MR0)** is set after reset. Software can disable the auto-negotiation function by clearing the ANEGEN bit. The contents of the **Ethernet PHY Management Register - Auto-Negotiation Advertisement (MR4)** are reflected to the Ethernet Controller's link partner during auto-negotiation via fast-link pulse coding.

Once auto-negotiation is complete, the DPLX and RATE bits in the **Ethernet PHY Management Register 18 - Diagnostic (MR18)** register reflect the actual speed and duplex condition. If auto-negotiation fails to establish a link for any reason, the ANEGF bit in the **MR18** register reflects this and auto-negotiation restarts from the beginning. Setting the RANEG bit in the **MR0** register also causes auto-negotiation to restart.

17.2.3.3 Polarity Correction

The Ethernet Controller is capable of either automatic or manual polarity reversal for 10BASE-T and auto-negotiation functions. Bits 4 and 5 (RVSPOL and APOL) in the **Ethernet PHY Management Register 16 - Vendor-Specific (MR16)** control this feature. The default is automatic mode, where APOL is clear and RVSPOL indicates if the detection circuitry has inverted the input signal. To enter manual mode, APOL should be set. In manual mode RVSPOL controls the signal polarity.

17.2.3.4 MDI/MDI-X Configuration

The Ethernet Controller supports the MDI/MDI-X configuration as defined in *IEEE 802.3-2002 specification*. The MDI/MDI-X configuration eliminates the need for cross-over cables when connecting to another device, such as a hub. The algorithm is controlled via settings in the **Ethernet PHY Management Register 24 - MDI/MIDIX Control (MR24)**. Refer to page 525 for additional details about these settings.

17.2.3.5 LED Indicators

The Ethernet Controller supports two LED signals that can be used to indicate various states of operation. These signals are mapped to the LED0 and LED1 pins. By default, these pins are configured as GPIO signals (PF3 and PF2). For the PHY layer to drive these signals, they must be reconfigured to their alternate function. See “General-Purpose Input/Outputs (GPIOs)” on page 180 for additional details. The function of these pins is programmable via the PHY layer **Ethernet PHY Management Register 23 - LED Configuration (MR23)**. Refer to page 524 for additional details on how to program these LED functions.

17.2.4 Interrupts

The Ethernet Controller can generate an interrupt for one or more of the following conditions:

- A frame has been received into an empty RX FIFO
- A frame transmission error has occurred
- A frame has been transmitted successfully
- A frame has been received with inadequate room in the RX FIFO (overrun)
- A frame has been received with one or more error conditions (for example, FCS failed)
- An MII management transaction between the MAC and PHY layers has completed
- One or more of the following PHY layer conditions occurs:
  - Auto-Negotiate Complete
  - Remote Fault
  - Link Status Change

- Link Partner Acknowledge
- Parallel Detect Fault
- Page Received
- Receive Error
- Jabber Event Detected

17.3 Initialization and Configuration

The following sections describe the hardware and software configuration required to set up the Ethernet Controller.

17.3.1 Hardware Configuration

Figure 17-4 on page 485 shows the proper method for interfacing the Ethernet Controller to a 10/100BASE-T Ethernet jack.

Figure 17-4. Interface to an Ethernet Jack

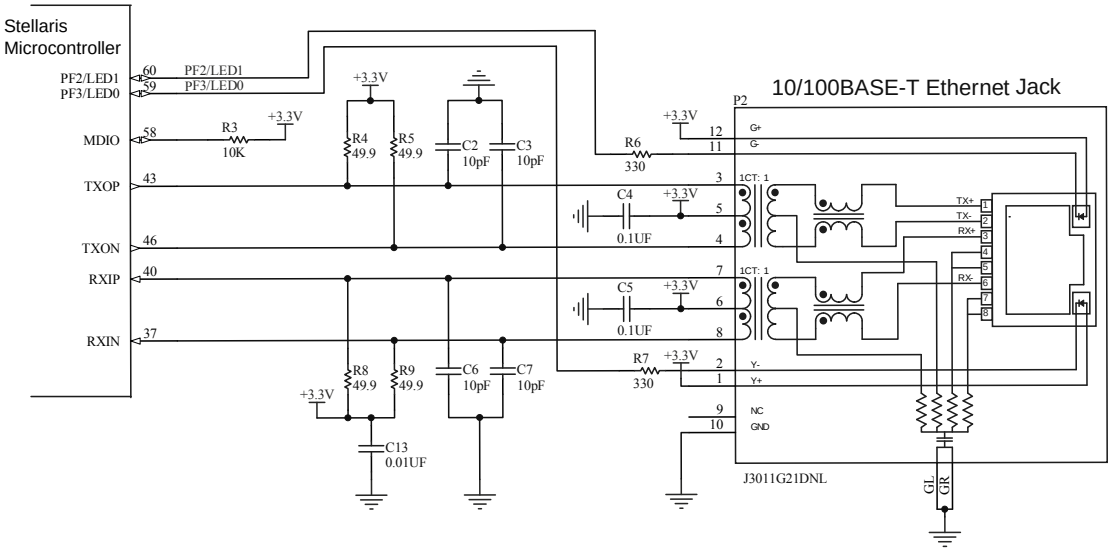

The following isolation transformers have been tested and are known to successfully interface to the Ethernet PHY layer.

- Isolation Transformers
  - TDK TLA-6T103
  - Bel-Fuse S558-5999-46
  - Halo TG22-3506ND
  - Pulse PE-68515
  - Valor ST6118
  - YCL 20PMT04
- Isolation transformers in low profile packages (0.100 in/2.5 mm or less)
  - TDK TLA-6T118
  - Halo TG110-S050
  - PCA EPF8023G

- Isolation transformers with integrated RJ45 connector
  - TDK TLA-6T704
  - Delta RJS-1A08T089A
- Isolation transformers with integrated RJ45 connector, LEDs and termination resistors
  - Pulse J0011D21B/E
  - Pulse J3011G21DNL

17.3.2 Software Configuration

To use the Ethernet Controller, it must be enabled by setting the `EPHY0` and `EMAC0` bits in the **RCGC2** register (see page 125). The following steps can then be used to configure the Ethernet Controller for basic operation.

1. Program the **MACDIV** register to obtain a 2.5 MHz clock (or less) on the internal MII. Assuming a 20-MHz system clock, the **MACDIV** value should be 0x03 or greater.
2. Program the **MACIA0** and **MACIA1** register for address filtering.
3. Program the **MACTCTL** register for Auto CRC generation, padding, and full-duplex operation using a value of 0x16.
4. Program the **MACRCTL** register to flush the receive FIFO and reject frames with bad FCS using a value of 0x18.
5. Enable both the Transmitter and Receive by setting the LSB in both the **MACTCTL** and **MACRCTL** registers.
6. To transmit a frame, write the frame into the TX FIFO using the **Ethernet MAC Data (MACDATA)** register. Then set the `NEWTX` bit in the **Ethernet Mac Transmission Request (MACTR)** register to initiate the transmit process. When the `NEWTX` bit has been cleared, the TX FIFO is available for the next transmit frame.
7. To receive a frame, wait for the `NPR` field in the **Ethernet MAC Number of Packets (MACNP)** register to be non-zero. Then begin reading the frame from the RX FIFO by using the **MACDATA** register. When the frame (including the FCS field) has been read, the `NPR` field decrements by one. When there are no more frames in the RX FIFO, the `NPR` field reads 0.

17.4 Ethernet Register Map

Table 17-2 on page 487 lists the Ethernet MAC registers. All addresses given are relative to the Ethernet MAC base address of 0x4004.8000.

The *IEEE 802.3* standard specifies a register set for controlling and gathering status from the PHY layer. The registers are collectively known as the MII Management registers and are detailed in Section 22.2.4 of the *IEEE 802.3 specification*. Table 17-2 on page 487 also lists these MII Management registers. *All addresses given are absolute and are written directly to the `REGADR` field of the **Ethernet MAC Management Control (MACMCTL)** register.* The format of registers 0 to 15 are defined by the IEEE specification and are common to all PHY layer implementations. The only variance allowed is for features that may or may not be supported by a specific PHY implementation. Registers 16 to 31 are vendor-specific registers, used to support features that are specific to a vendor's PHY implementation. Vendor-specific registers not listed are reserved.

Table 17-2. Ethernet Register Map

Offset	Name	Type	Reset	Description	See page
Ethernet MAC					
0x000	MACRIS/MACIACK	R/W1C	0x0000.0000	Ethernet MAC Raw Interrupt Status/Acknowledge	489
0x004	MACIM	R/W	0x0000.007F	Ethernet MAC Interrupt Mask	492
0x008	MACRCTL	R/W	0x0000.0008	Ethernet MAC Receive Control	493
0x00C	MACTCTL	R/W	0x0000.0000	Ethernet MAC Transmit Control	494
0x010	MACDATA	R/W	0x0000.0000	Ethernet MAC Data	495
0x014	MACIA0	R/W	0x0000.0000	Ethernet MAC Individual Address 0	497
0x018	MACIA1	R/W	0x0000.0000	Ethernet MAC Individual Address 1	498
0x01C	MACTHR	R/W	0x0000.003F	Ethernet MAC Threshold	499
0x020	MACMCTL	R/W	0x0000.0000	Ethernet MAC Management Control	501
0x024	MACMDV	R/W	0x0000.0080	Ethernet MAC Management Divider	502
0x02C	MACMTXD	R/W	0x0000.0000	Ethernet MAC Management Transmit Data	503
0x030	MACMRXD	R/W	0x0000.0000	Ethernet MAC Management Receive Data	504
0x034	MACNP	RO	0x0000.0000	Ethernet MAC Number of Packets	505
0x038	MACTR	R/W	0x0000.0000	Ethernet MAC Transmission Request	506
0x03C	MACTS	R/W	0x0000.0000	Ethernet MAC Timer Support	507
MII Management					
-	MR0	R/W	0x3100	Ethernet PHY Management Register 0 – Control	508
-	MR1	RO	0x7849	Ethernet PHY Management Register 1 – Status	510
-	MR2	RO	0x000E	Ethernet PHY Management Register 2 – PHY Identifier 1	512
-	MR3	RO	0x7237	Ethernet PHY Management Register 3 – PHY Identifier 2	513
-	MR4	R/W	0x01E1	Ethernet PHY Management Register 4 – Auto-Negotiation Advertisement	514
-	MR5	RO	0x0000	Ethernet PHY Management Register 5 – Auto-Negotiation Link Partner Base Page Ability	516
-	MR6	RO	0x0000	Ethernet PHY Management Register 6 – Auto-Negotiation Expansion	517
-	MR16	R/W	0x0140	Ethernet PHY Management Register 16 – Vendor-Specific	518
-	MR17	R/W	0x0000	Ethernet PHY Management Register 17 – Interrupt Control/Status	520
-	MR18	RO	0x0000	Ethernet PHY Management Register 18 – Diagnostic	522
-	MR19	R/W	0x4000	Ethernet PHY Management Register 19 – Transceiver Control	523

Offset	Name	Type	Reset	Description	See page
-	MR23	R/W	0x0010	Ethernet PHY Management Register 23 – LED Configuration	524
-	MR24	R/W	0x00C0	Ethernet PHY Management Register 24 –MDI/MDIX Control	525

17.5 Ethernet MAC Register Descriptions

The remainder of this section lists and describes the Ethernet MAC registers, in numerical order by address offset. Also see “MII Management Register Descriptions” on page 507.

Register 1: Ethernet MAC Raw Interrupt Status/Acknowledge (MACRIS/MACIACK), offset 0x000

The **MACRIS/MACIACK** register is the interrupt status and acknowledge register. On a read, this register gives the current status value of the corresponding interrupt prior to masking. On a write, setting any bit clears the corresponding interrupt status bit.

Reads

Ethernet MAC Raw Interrupt Status/Acknowledge (MACRIS/MACIACK)

Base 0x4004.8000
Offset 0x000
Type RO, reset 0x0000.0000

	31	30	29	28	27	26	25	24	23	22	21	20	19	18	17	16
	reserved															
Type	RO	RO	RO	RO	RO	RO	RO	RO	RO	RO	RO	RO	RO	RO	RO	RO
Reset	0	0	0	0	0	0	0	0	0	0	0	0	0	0	0	0

	15	14	13	12	11	10	9	8	7	6	5	4	3	2	1	0
	reserved									PHYINT	MDINT	RXER	FOV	TXEMP	TXER	RXINT
Type	RO	RO	RO	RO	RO	RO	RO	RO	RO	RO	RO	RO	RO	RO	RO	RO
Reset	0	0	0	0	0	0	0	0	0	0	0	0	0	0	0	0

Bit/Field	Name	Type	Reset	Description
31:7	reserved	RO	0x0000.00	Software should not rely on the value of a reserved bit. To provide compatibility with future products, the value of a reserved bit should be preserved across a read-modify-write operation.
6	PHYINT	RO	0	PHY Interrupt When set, indicates that an enabled interrupt in the PHY layer has occurred. **MR17** in the PHY must be read to determine the specific PHY event that triggered this interrupt.
5	MDINT	RO	0	MII Transaction Complete When set, indicates that a transaction (read or write) on the MII interface has completed successfully.
4	RXER	RO	0	Receive Error This bit indicates that an error was encountered on the receiver. The possible errors that can cause this interrupt bit to be set are: ■ A receive error occurs during the reception of a frame (100 Mb/s only). ■ The frame is not an integer number of bytes (dribble bits) due to an alignment error. ■ The CRC of the frame does not pass the FCS check. ■ The length/type field is inconsistent with the frame data size when interpreted as a length field.
3	FOV	RO	0	FIFO Overrun When set, indicates that an overrun was encountered on the receive FIFO.

Bit/Field	Name	Type	Reset	Description
2	TXEMP	RO	0	Transmit FIFO Empty When set, indicates that the packet was transmitted and that the TX FIFO is empty.
1	TXER	RO	0	Transmit Error When set, indicates that an error was encountered on the transmitter. The possible errors that can cause this interrupt bit to be set are: ■ The data length field stored in the TX FIFO exceeds 2032 decimal (buffer length - 16 bytes of header data). The frame is not sent when this error occurs. ■ The retransmission attempts during the backoff process have exceeded the maximum limit of 16 decimal.
0	RXINT	RO	0	Packet Received When set, indicates that at least one packet has been received and is stored in the receiver FIFO.

Writes

Ethernet MAC Raw Interrupt Status/Acknowledge (MACRIS/MACIACK)

Base 0x4004.8000
Offset 0x000
Type WO, reset 0x0000.0000

	31	30	29	28	27	26	25	24	23	22	21	20	19	18	17	16
	reserved															
Type	RO	RO	RO	RO	RO	RO	RO	RO	RO	RO	RO	RO	RO	RO	RO	RO
Reset	0	0	0	0	0	0	0	0	0	0	0	0	0	0	0	0

	15	14	13	12	11	10	9	8	7	6	5	4	3	2	1	0
	reserved									PHYINT	MDINT	RXER	FOV	TXEMP	TXER	RXINT
Type	RO	RO	RO	RO	RO	RO	RO	RO	RO	W1C	W1C	W1C	W1C	W1C	W1C	W1C
Reset	0	0	0	0	0	0	0	0	0	0	0	0	0	0	0	0

Bit/Field	Name	Type	Reset	Description
31:7	reserved	RO	0x0000.00	Software should not rely on the value of a reserved bit. To provide compatibility with future products, the value of a reserved bit should be preserved across a read-modify-write operation.
6	PHYINT	W1C	0	Clear PHY Interrupt Setting this bit clears the `PHYINT` interrupt in the **MACRIS** register.
5	MDINT	W1C	0	Clear MII Transaction Complete Setting this bit clears the `MDINT` interrupt in the **MACRIS** register.
4	RXER	W1C	0	Clear Receive Error Setting this bit clears the `RXER` interrupt in the **MACRIS** register.
3	FOV	W1C	0	Clear FIFO Overrun Setting this bit clears the `FOV` interrupt in the **MACRIS** register.

Bit/Field	Name	Type	Reset	Description
2	TXEMP	W1C	0	Clear Transmit FIFO Empty Setting this bit clears the `TXEMP` interrupt in the **MACRIS** register.
1	TXER	W1C	0	Clear Transmit Error Setting this bit clears the `TXER` interrupt in the **MACRIS** register and resets the TX FIFO write pointer.
0	RXINT	W1C	0	Clear Packet Received Setting this bit clears the `RXINT` interrupt in the **MACRIS** register.

Register 2: Ethernet MAC Interrupt Mask (MACIM), offset 0x004

This register allows software to enable/disable Ethernet MAC interrupts. Clearing a bit disables the interrupt, while setting the bit enables it.

Ethernet MAC Interrupt Mask (MACIM)

Base 0x4004.8000
Offset 0x004
Type R/W, reset 0x0000.007F

	31	30	29	28	27	26	25	24	23	22	21	20	19	18	17	16
	reserved															
Type	RO	RO	RO	RO	RO	RO	RO	RO	RO	RO	RO	RO	RO	RO	RO	RO
Reset	0	0	0	0	0	0	0	0	0	0	0	0	0	0	0	0

	15	14	13	12	11	10	9	8	7	6	5	4	3	2	1	0
	reserved									PHYINTM	MDINTM	RXERM	FOVM	TXEMPM	TXERM	RXINTM
Type	RO	RO	RO	RO	RO	RO	RO	RO	RO	R/W	R/W	R/W	R/W	R/W	R/W	R/W
Reset	0	0	0	0	0	0	0	0	0	1	1	1	1	1	1	1

Bit/Field	Name	Type	Reset	Description
31:7	reserved	RO	0x0000.00	Software should not rely on the value of a reserved bit. To provide compatibility with future products, the value of a reserved bit should be preserved across a read-modify-write operation.
6	PHYINTM	R/W	1	Mask PHY Interrupt Clearing this bit masks the `PHYINT` bit in the **MACRIS** register from being set.
5	MDINTM	R/W	1	Mask MII Transaction Complete Clearing this bit masks the `MDINT` bit in the **MACRIS** register from being set.
4	RXERM	R/W	1	Mask Receive Error Clearing this bit masks the `RXER` bit in the **MACRIS** register from being set.
3	FOVM	R/W	1	Mask FIFO Overrun Clearing this bit masks the `FOV` bit in the **MACRIS** register from being set.
2	TXEMPM	R/W	1	Mask Transmit FIFO Empty Clearing this bit masks the `TXEMP` bit in the **MACRIS** register from being set.
1	TXERM	R/W	1	Mask Transmit Error Clearing this bit masks the `TXER` bit in the **MACRIS** register from being set.
0	RXINTM	R/W	1	Mask Packet Received Clearing this bit masks the `RXINT` bit in the **MACRIS** register from being set.

Register 3: Ethernet MAC Receive Control (MACRCTL), offset 0x008

This register configures the receiver and controls the types of frames that are received.

It is important to note that when the receiver is enabled, all valid frames with a broadcast address of FF-FF-FF-FF-FF-FF in the Destination Address field are received and stored in the RX FIFO, even if the AMUL bit is not set.

Ethernet MAC Receive Control (MACRCTL)

Base 0x4004.8000
Offset 0x008
Type R/W, reset 0x0000.0008

	31	30	29	28	27	26	25	24	23	22	21	20	19	18	17	16
	reserved															
Type	RO	RO	RO	RO	RO	RO	RO	RO	RO	RO	RO	RO	RO	RO	RO	RO
Reset	0	0	0	0	0	0	0	0	0	0	0	0	0	0	0	0

	15	14	13	12	11	10	9	8	7	6	5	4	3	2	1	0
	reserved											RSTFIFO	BADCRC	PRMS	AMUL	RXEN
Type	RO	RO	RO	RO	RO	RO	RO	RO	RO	RO	RO	R/W	R/W	R/W	R/W	R/W
Reset	0	0	0	0	0	0	0	0	0	0	0	0	1	0	0	0

Bit/Field	Name	Type	Reset	Description
31:5	reserved	RO	0x0000.000	Software should not rely on the value of a reserved bit. To provide compatibility with future products, the value of a reserved bit should be preserved across a read-modify-write operation.
4	RSTFIFO	R/W	0	Clear Receive FIFO When set, this bit clears the receive FIFO. This should be done when software initialization is performed. It is recommended that the receiver be disabled (RXEN = 0), before a reset is initiated (RSTFIFO = 1). This sequence flushes and resets the RX FIFO. This bit is automatically cleared when read.
3	BADCRC	R/W	1	Enable Reject Bad CRC When set, the BADCRC bit enables the rejection of frames with an incorrectly calculated CRC. If a bad CRC is encountered, the RXER bit in the **MACRIS** register is set and the receiver FIFO is reset.
2	PRMS	R/W	0	Enable Promiscuous Mode When set, the PRMS bit enables Promiscuous mode, which accepts all valid frames, regardless of the specified Destination Address.
1	AMUL	R/W	0	Enable Multicast Frames When set, the AMUL bit enables the reception of multicast frames.
0	RXEN	R/W	0	Enable Receiver When set the RXEN bit enables the Ethernet receiver. When this bit is clear, the receiver is disabled and all frames are ignored.

Register 4: Ethernet MAC Transmit Control (MACTCTL), offset 0x00C

This register configures the transmitter and controls the frames that are transmitted.

Ethernet MAC Transmit Control (MACTCTL)

Base 0x4004.8000
Offset 0x00C
Type R/W, reset 0x0000.0000

	31	30	29	28	27	26	25	24	23	22	21	20	19	18	17	16
	reserved															
Type	RO	RO	RO	RO	RO	RO	RO	RO	RO	RO	RO	RO	RO	RO	RO	RO
Reset	0	0	0	0	0	0	0	0	0	0	0	0	0	0	0	0

	15	14	13	12	11	10	9	8	7	6	5	4	3	2	1	0
	reserved											DUPLEX	reserved	CRC	PADEN	TXEN
Type	RO	RO	RO	RO	RO	RO	RO	RO	RO	RO	RO	R/W	RO	R/W	R/W	R/W
Reset	0	0	0	0	0	0	0	0	0	0	0	0	0	0	0	0

Bit/Field	Name	Type	Reset	Description
31:5	reserved	RO	0x0000.000	Software should not rely on the value of a reserved bit. To provide compatibility with future products, the value of a reserved bit should be preserved across a read-modify-write operation.
4	DUPLEX	R/W	0	Enable Duplex Mode When set, this bit enables Duplex mode, allowing simultaneous transmission and reception.
3	reserved	RO	0	Software should not rely on the value of a reserved bit. To provide compatibility with future products, the value of a reserved bit should be preserved across a read-modify-write operation.
2	CRC	R/W	0	Enable CRC Generation When set this bit enables the automatic generation of the CRC and its placement at the end of the packet. If this bit is clear, the frames placed in the TX FIFO are sent exactly as they are written into the FIFO. Note that this bit should generally be set.
1	PADEN	R/W	0	Enable Packet Padding When set, this bit enables the automatic padding of packets that do not meet the minimum frame size. Note that this bit should generally be set.
0	TXEN	R/W	0	Enable Transmitter When set, this bit enables the transmitter. When this bit is clear, the transmitter is disabled.

Register 5: Ethernet MAC Data (MACDATA), offset 0x010

This register enables software to access the TX and RX FIFOs.

Reads from this register return the data stored in the RX FIFO from the location indicated by the read pointer. The read pointer is then auto incremented to the next RX FIFO location. Reading from the RX FIFO when a frame has not been received or is in the process of being received will return indeterminate data and not increment the read pointer.

Writes to this register store the data in the TX FIFO at the location indicated by the write pointer. The write pointer is the auto incremented to the next TX FIFO location. Writing more data into the TX FIFO than indicated in the length field will result in the data being lost. Writing less data into the TX FIFO than indicated in the length field will result in indeterminate data being appended to the end of the frame to achieve the indicated length. Attempting to write the next frame into the TX FIFO before transmission of the first has completed will result in the data being lost.

There is no mechanism for randomly accessing bytes in either the RX or TX FIFOs. Data must be read from the RX FIFO sequentially and stored in a buffer for further processing. Once a read has been performed, the data in the FIFO cannot be re-read. Data must be written to the TX FIFO sequentially. If an error is made in placing the frame into the TX FIFO, the write pointer can be reset to the start of the TX FIFO by writing the TXER bit of the **MACIACK** register and then the data re-written.

Reads

Ethernet MAC Data (MACDATA)

Base 0x4004.8000
Offset 0x010
Type RO, reset 0x0000.0000

	31	30	29	28	27	26	25	24	23	22	21	20	19	18	17	16
	RXDATA															
Type	RO	RO	RO	RO	RO	RO	RO	RO	RO	RO	RO	RO	RO	RO	RO	RO
Reset	0	0	0	0	0	0	0	0	0	0	0	0	0	0	0	0

	15	14	13	12	11	10	9	8	7	6	5	4	3	2	1	0
	RXDATA															
Type	RO	RO	RO	RO	RO	RO	RO	RO	RO	RO	RO	RO	RO	RO	RO	RO
Reset	0	0	0	0	0	0	0	0	0	0	0	0	0	0	0	0

Bit/Field	Name	Type	Reset	Description
31:0	RXDATA	RO	0x0000.0000	Receive FIFO Data The RXDATA bits represent the next word of data stored in the RX FIFO.

Writes

Ethernet MAC Data (MACDATA)

Base 0x4004.8000
Offset 0x010
Type WO, reset 0x0000.0000

	31	30	29	28	27	26	25	24	23	22	21	20	19	18	17	16
	TXDATA															
Type	WO	WO	WO	WO	WO	WO	WO	WO	WO	WO	WO	WO	WO	WO	WO	WO
Reset	0	0	0	0	0	0	0	0	0	0	0	0	0	0	0	0

	15	14	13	12	11	10	9	8	7	6	5	4	3	2	1	0
	TXDATA															
Type	WO	WO	WO	WO	WO	WO	WO	WO	WO	WO	WO	WO	WO	WO	WO	WO
Reset	0	0	0	0	0	0	0	0	0	0	0	0	0	0	0	0

Bit/Field	Name	Type	Reset	Description
31:0	TXDATA	WO	0x0000.0000	Transmit FIFO Data The TXDATA bits represent the next word of data to place in the TX FIFO for transmission.

Register 6: Ethernet MAC Individual Address 0 (MACIA0), offset 0x014

This register enables software to program the first four bytes of the hardware MAC address of the Network Interface Card (NIC). (The last two bytes are in **MACIA1**). The 6-byte Individual Address is compared against the incoming Destination Address fields to determine whether the frame should be received.

Ethernet MAC Individual Address 0 (MACIA0)

Base 0x4004.8000
Offset 0x014
Type R/W, reset 0x0000.0000

	31	30	29	28	27	26	25	24	23	22	21	20	19	18	17	16
	MACOCT4								MACOCT3							
Type	R/W	R/W	R/W	R/W	R/W	R/W	R/W	R/W	R/W	R/W	R/W	R/W	R/W	R/W	R/W	R/W
Reset	0	0	0	0	0	0	0	0	0	0	0	0	0	0	0	0

	15	14	13	12	11	10	9	8	7	6	5	4	3	2	1	0
	MACOCT2								MACOCT1							
Type	R/W	R/W	R/W	R/W	R/W	R/W	R/W	R/W	R/W	R/W	R/W	R/W	R/W	R/W	R/W	R/W
Reset	0	0	0	0	0	0	0	0	0	0	0	0	0	0	0	0

Bit/Field	Name	Type	Reset	Description
31:24	MACOCT4	R/W	0x00	MAC Address Octet 4 The `MACOCT4` bits represent the fourth octet of the MAC address used to uniquely identify the Ethernet Controller.
23:16	MACOCT3	R/W	0x00	MAC Address Octet 3 The `MACOCT3` bits represent the third octet of the MAC address used to uniquely identify the Ethernet Controller.
15:8	MACOCT2	R/W	0x00	MAC Address Octet 2 The `MACOCT2` bits represent the second octet of the MAC address used to uniquely identify the Ethernet Controller.
7:0	MACOCT1	R/W	0x00	MAC Address Octet 1 The `MACOCT1` bits represent the first octet of the MAC address used to uniquely identify the Ethernet Controller.

Register 7: Ethernet MAC Individual Address 1 (MACIA1), offset 0x018

This register enables software to program the last two bytes of the hardware MAC address of the Network Interface Card (NIC). (The first four bytes are in **MACIA0**). The 6-byte IAR is compared against the incoming Destination Address fields to determine whether the frame should be received.

Ethernet MAC Individual Address 1 (MACIA1)

Base 0x4004.8000
Offset 0x018
Type R/W, reset 0x0000.0000

	31	30	29	28	27	26	25	24	23	22	21	20	19	18	17	16
	reserved															
Type	RO	RO	RO	RO	RO	RO	RO	RO	RO	RO	RO	RO	RO	RO	RO	RO
Reset	0	0	0	0	0	0	0	0	0	0	0	0	0	0	0	0

	15	14	13	12	11	10	9	8	7	6	5	4	3	2	1	0
	MACOCT6								MACOCT5							
Type	R/W	R/W	R/W	R/W	R/W	R/W	R/W	R/W	R/W	R/W	R/W	R/W	R/W	R/W	R/W	R/W
Reset	0	0	0	0	0	0	0	0	0	0	0	0	0	0	0	0

Bit/Field	Name	Type	Reset	Description
31:16	reserved	RO	0x0000	Software should not rely on the value of a reserved bit. To provide compatibility with future products, the value of a reserved bit should be preserved across a read-modify-write operation.
15:8	MACOCT6	R/W	0x00	MAC Address Octet 6 The `MACOCT6` bits represent the sixth octet of the MAC address used to uniquely identify each Ethernet Controller.
7:0	MACOCT5	R/W	0x00	MAC Address Octet 5 The `MACOCT5` bits represent the fifth octet of the MAC address used to uniquely identify the Ethernet Controller.

Register 8: Ethernet MAC Threshold (MACTHR), offset 0x01C

In order to increase the transmission rate, it is possible to program the Ethernet Controller to begin transmission of the next frame prior to the completion of the transmission of the current frame. Note: Extreme care must be used when implementing this function. Software must be able to guarantee that the complete frame is able to be stored in the transmission FIFO prior to the completion of the transmission frame.

This register enables software to set the threshold level at which the transmission of the frame begins. If the `THRESH` bits are set to 0x3F, which is the reset value, the early transmission feature is disabled, and transmission does not start until the `NEWTX` bit is set in the **MACTR** register.

Writing the `THRESH` bits to any value besides 0x3F enables the early transmission feature. Once the byte count of data in the TX FIFO reaches the value derived from the `THRESH` bits as shown below, transmission of the frame begins. When `THRESH` is set to all 0s, transmission of the frame begins after 4 bytes (a single write) are stored in the TX FIFO. Each increment of the `THRESH` bit field waits for an additional 32 bytes of data (eight writes) to be stored in the TX FIFO. Therefore, a value of 0x01 causes the transmitter to wait for 36 bytes of data to be written while a value of 0x02 makes the wait equal to 68 bytes of written data. In general, early transmission starts when:

```
Number of Bytes >= 4 (THRESH x 8 + 1)
```

Reaching the threshold level has the same effect as setting the `NEWTX` bit in the **MACTR** register. Transmission of the frame begins and then the number of bytes indicated by the Data Length field is transmitted. Because under-run checking is not performed, if any event, such as an interrupt, delays the filling of the FIFO, the tail pointer may reach and pass the write pointer in the TX FIFO. In this event, indeterminate values are transmitted rather than the end of the frame. Therefore, sufficient bus bandwidth for writing to the TX FIFO must be guaranteed by the software.

If a frame smaller than the threshold level must be sent, the `NEWTX` bit in the **MACTR** register must be set with an explicit write. This initiates the transmission of the frame even though the threshold limit has not been reached.

If the threshold level is set too small, it is possible for the transmitter to underrun. If this occurs, the transmit frame is aborted, and a transmit error occurs. Note that in this case, the `TXER` bit in the **`MACRIS`** is not set meaning that the CPU receives no indication that a transmit error happened.

Ethernet MAC Threshold (MACTHR)

Base 0x4004.8000
Offset 0x01C
Type R/W, reset 0x0000.003F

	31	30	29	28	27	26	25	24	23	22	21	20	19	18	17	16
	reserved															
Type	RO	RO	RO	RO	RO	RO	RO	RO	RO	RO	RO	RO	RO	RO	RO	RO
Reset	0	0	0	0	0	0	0	0	0	0	0	0	0	0	0	0

	15	14	13	12	11	10	9	8	7	6	5	4	3	2	1	0
	reserved										THRESH					
Type	RO	RO	RO	RO	RO	RO	RO	RO	RO	RO	R/W	R/W	R/W	R/W	R/W	R/W
Reset	0	0	0	0	0	0	0	0	0	0	1	1	1	1	1	1

Bit/Field	Name	Type	Reset	Description
31:6	reserved	RO	0x0000.00	Software should not rely on the value of a reserved bit. To provide compatibility with future products, the value of a reserved bit should be preserved across a read-modify-write operation.

Bit/Field	Name	Type	Reset	Description
5:0	THRESH	R/W	0x3F	Threshold Value The THRESH bits represent the early transmit threshold. Once the amount of data in the TX FIFO exceeds the value represented by the above equation, transmission of the packet begins.

Register 9: Ethernet MAC Management Control (MACMCTL), offset 0x020

This register enables software to control the transfer of data to and from the MII Management registers in the Ethernet PHY layer. The address, name, type, reset configuration, and functional description of each of these registers can be found in Table 17-2 on page 487 and in "MII Management Register Descriptions" on page 507.

In order to initiate a *read* transaction from the MII Management registers, the `WRITE` bit must be cleared during the same cycle that the `START` bit is set.

In order to initiate a *write* transaction to the MII Management registers, the `WRITE` bit must be set during the same cycle that the `START` bit is set.

Ethernet MAC Management Control (MACMCTL)

Base 0x4004.8000
Offset 0x020
Type R/W, reset 0x0000.0000

	31	30	29	28	27	26	25	24	23	22	21	20	19	18	17	16
	reserved															
Type	RO	RO	RO	RO	RO	RO	RO	RO	RO	RO	RO	RO	RO	RO	RO	RO
Reset	0	0	0	0	0	0	0	0	0	0	0	0	0	0	0	0

	15	14	13	12	11	10	9	8	7	6	5	4	3	2	1	0
	reserved								REGADR					reserved	WRITE	START
Type	RO	RO	RO	RO	RO	RO	RO	RO	R/W	R/W	R/W	R/W	R/W	RO	R/W	R/W
Reset	0	0	0	0	0	0	0	0	0	0	0	0	0	0	0	0

Bit/Field	Name	Type	Reset	Description
31:8	reserved	RO	0x0000.00	Software should not rely on the value of a reserved bit. To provide compatibility with future products, the value of a reserved bit should be preserved across a read-modify-write operation.
7:3	REGADR	R/W	0x0	MII Register Address The `REGADR` bit field represents the MII Management register address for the next MII management interface transaction. Refer to Table 17-2 on page 487 for the PHY register offsets. Note that any address that is not valid in the register map should not be written to and any data read should be ignored.
2	reserved	RO	0	Software should not rely on the value of a reserved bit. To provide compatibility with future products, the value of a reserved bit should be preserved across a read-modify-write operation.
1	WRITE	R/W	0	MII Register Transaction Type The `WRITE` bit represents the operation of the next MII management interface transaction. If `WRITE` is set, the next operation is a write; if `WRITE` is clear, the next transaction is a read.
0	START	R/W	0	MII Register Transaction Enable The `START` bit represents the initiation of the next MII management interface transaction. When this bit is set, the MII register located at `REGADR` is read (`WRITE=0`) or written (`WRITE=1`).

Register 10: Ethernet MAC Management Divider (MACMDV), offset 0x024

This register enables software to set the clock divider for the Management Data Clock (MDC). This clock is used to synchronize read and write transactions between the system and the MII Management registers. The frequency of the MDC clock can be calculated from the following formula:

$$F_{mdc} = \frac{F_{ipclk}}{2 \times (MACDVR + 1)}$$

The clock divider must be written with a value that ensures that the MDC clock does not exceed a frequency of 2.5 MHz.

Ethernet MAC Management Divider (MACMDV)

Base 0x4004.8000
Offset 0x024
Type R/W, reset 0x0000.0080

	31	30	29	28	27	26	25	24	23	22	21	20	19	18	17	16
	reserved															
Type	RO	RO	RO	RO	RO	RO	RO	RO	RO	RO	RO	RO	RO	RO	RO	RO
Reset	0	0	0	0	0	0	0	0	0	0	0	0	0	0	0	0

	15	14	13	12	11	10	9	8	7	6	5	4	3	2	1	0
	reserved								DIV							
Type	RO	RO	RO	RO	RO	RO	RO	RO	R/W	R/W	R/W	R/W	R/W	R/W	R/W	R/W
Reset	0	0	0	0	0	0	0	0	1	0	0	0	0	0	0	0

Bit/Field	Name	Type	Reset	Description
31:8	reserved	RO	0x0000.00	Software should not rely on the value of a reserved bit. To provide compatibility with future products, the value of a reserved bit should be preserved across a read-modify-write operation.
7:0	DIV	R/W	0x80	Clock Divider The `DIV` bits are used to set the clock divider for the MDC clock used to transmit data between the MAC and PHY layers over the serial MII interface.

Register 11: Ethernet MAC Management Transmit Data (MACMTXD), offset 0x02C

This register holds the next value to be written to the MII Management registers.

Ethernet MAC Management Transmit Data (MACMTXD)

Base 0x4004.8000
Offset 0x02C
Type R/W, reset 0x0000.0000

	31	30	29	28	27	26	25	24	23	22	21	20	19	18	17	16
	reserved															
Type	RO	RO	RO	RO	RO	RO	RO	RO	RO	RO	RO	RO	RO	RO	RO	RO
Reset	0	0	0	0	0	0	0	0	0	0	0	0	0	0	0	0

	15	14	13	12	11	10	9	8	7	6	5	4	3	2	1	0
	MDTX															
Type	R/W	R/W	R/W	R/W	R/W	R/W	R/W	R/W	R/W	R/W	R/W	R/W	R/W	R/W	R/W	R/W
Reset	0	0	0	0	0	0	0	0	0	0	0	0	0	0	0	0

Bit/Field	Name	Type	Reset	Description
31:16	reserved	RO	0x0000	Software should not rely on the value of a reserved bit. To provide compatibility with future products, the value of a reserved bit should be preserved across a read-modify-write operation.
15:0	MDTX	R/W	0x0000	MII Register Transmit Data The `MDTX` bits represent the data that will be written in the next MII management transaction.

Register 12: Ethernet MAC Management Receive Data (MACMRXD), offset 0x030

This register holds the last value read from the MII Management registers.

Ethernet MAC Management Receive Data (MACMRXD)

Base 0x4004.8000
Offset 0x030
Type R/W, reset 0x0000.0000

	31	30	29	28	27	26	25	24	23	22	21	20	19	18	17	16
	reserved															
Type	RO	RO	RO	RO	RO	RO	RO	RO	RO	RO	RO	RO	RO	RO	RO	RO
Reset	0	0	0	0	0	0	0	0	0	0	0	0	0	0	0	0

	15	14	13	12	11	10	9	8	7	6	5	4	3	2	1	0
	MDRX															
Type	R/W	R/W	R/W	R/W	R/W	R/W	R/W	R/W	R/W	R/W	R/W	R/W	R/W	R/W	R/W	R/W
Reset	0	0	0	0	0	0	0	0	0	0	0	0	0	0	0	0

Bit/Field	Name	Type	Reset	Description
31:16	reserved	RO	0x0000	Software should not rely on the value of a reserved bit. To provide compatibility with future products, the value of a reserved bit should be preserved across a read-modify-write operation.
15:0	MDRX	R/W	0x0000	MII Register Receive Data The `MDRX` bits represent the data that was read in the previous MII management transaction.

Register 13: Ethernet MAC Number of Packets (MACNP), offset 0x034

This register holds the number of frames that are currently in the RX FIFO. When `NPR` is 0, there are no frames in the RX FIFO and the `RXINT` bit is clear. When `NPR` is any other value, there is at least one frame in the RX FIFO and the `RXINT` bit in the **MACRIS** register is set.

Ethernet MAC Number of Packets (MACNP)

Base 0x4004.8000
Offset 0x034
Type RO, reset 0x0000.0000

	31	30	29	28	27	26	25	24	23	22	21	20	19	18	17	16
	reserved															
Type	RO	RO	RO	RO	RO	RO	RO	RO	RO	RO	RO	RO	RO	RO	RO	RO
Reset	0	0	0	0	0	0	0	0	0	0	0	0	0	0	0	0

	15	14	13	12	11	10	9	8	7	6	5	4	3	2	1	0
	reserved										NPR					
Type	RO	RO	RO	RO	RO	RO	RO	RO	RO	RO	RO	RO	RO	RO	RO	RO
Reset	0	0	0	0	0	0	0	0	0	0	0	0	0	0	0	0

Bit/Field	Name	Type	Reset	Description
31:6	reserved	RO	0x0000.00	Software should not rely on the value of a reserved bit. To provide compatibility with future products, the value of a reserved bit should be preserved across a read-modify-write operation.
5:0	NPR	RO	0x00	Number of Packets in Receive FIFO The `NPR` bits represent the number of packets stored in the RX FIFO. While the `NPR` field is greater than 0, the `RXINT` interrupt in the **MACRIS** register is set.

Register 14: Ethernet MAC Transmission Request (MACTR), offset 0x038

This register enables software to initiate the transmission of the frame currently located in the TX FIFO. Once the frame has been transmitted from the TX FIFO or a transmission error has been encountered, the `NEWTX` bit is automatically cleared.

Ethernet MAC Transmission Request (MACTR)

Base 0x4004.8000
Offset 0x038
Type R/W, reset 0x0000.0000

	31	30	29	28	27	26	25	24	23	22	21	20	19	18	17	16
	reserved															
Type	RO	RO	RO	RO	RO	RO	RO	RO	RO	RO	RO	RO	RO	RO	RO	RO
Reset	0	0	0	0	0	0	0	0	0	0	0	0	0	0	0	0

	15	14	13	12	11	10	9	8	7	6	5	4	3	2	1	0
	reserved															NEWTX
Type	RO	RO	RO	RO	RO	RO	RO	RO	RO	RO	RO	RO	RO	RO	RO	R/W
Reset	0	0	0	0	0	0	0	0	0	0	0	0	0	0	0	0

Bit/Field	Name	Type	Reset	Description
31:1	reserved	RO	0x0000.000	Software should not rely on the value of a reserved bit. To provide compatibility with future products, the value of a reserved bit should be preserved across a read-modify-write operation.
0	NEWTX	R/W	0	New Transmission When set, the `NEWTX` bit initiates an Ethernet transmission once the packet has been placed in the TX FIFO. This bit is cleared once the transmission has been completed. If early transmission is being used (see the **MACTHR** register), this bit does not need to be set.

Register 15: Ethernet MAC Timer Support (MACTS), offset 0x03C

This register enables software to enable highly precise timing on the transmission and reception of frames. To enable this function, set the TSEN bit.

Ethernet MAC Timer Support (MACTS)

Base 0x4004.8000
Offset 0x03C
Type R/W, reset 0x0000.0000

	31	30	29	28	27	26	25	24	23	22	21	20	19	18	17	16
	reserved															
Type	RO	RO	RO	RO	RO	RO	RO	RO	RO	RO	RO	RO	RO	RO	RO	RO
Reset	0	0	0	0	0	0	0	0	0	0	0	0	0	0	0	0

	15	14	13	12	11	10	9	8	7	6	5	4	3	2	1	0
	reserved															TSEN
Type	RO	RO	RO	RO	RO	RO	RO	RO	RO	RO	RO	RO	RO	RO	RO	R/W
Reset	0	0	0	0	0	0	0	0	0	0	0	0	0	0	0	0

Bit/Field	Name	Type	Reset	Description
31:1	reserved	RO	0x0000.000	Software should not rely on the value of a reserved bit. To provide compatibility with future products, the value of a reserved bit should be preserved across a read-modify-write operation.
0	TSEN	R/W	0	Time Stamp Enable When set, the TSEN bit multiplexes the TX and RX interrupts to the CCP inputs of General-Purpose Timer 3.

17.6 MII Management Register Descriptions

The *IEEE 802.3 standard* specifies a register set for controlling and gathering status from the PHY layer. The registers are collectively known as the MII Management registers. All addresses given are absolute. Addresses not listed are reserved; these addresses should not be written to and any data read should be ignored. Also see “Ethernet MAC Register Descriptions” on page 488.

Register 16: Ethernet PHY Management Register 0 – Control (MR0), address 0x00

This register enables software to configure the operation of the PHY layer. The default settings of these registers are designed to initialize the Ethernet Controller to a normal operational mode without configuration.

Ethernet PHY Management Register 0 – Control (MR0)

Base 0x4004.8000
Address 0x00
Type R/W, reset 0x3100

	15	14	13	12	11	10	9	8	7	6	5	4	3	2	1	0
	RESET	LOOPBK	SPEEDSL	ANEGEN	PWRDN	ISO	RANEG	DUPLEX	COLT	reserved						
Type	R/W	R/W	R/W	R/W	R/W	R/W	R/W	R/W	R/W	R/W	R/W	R/W	R/W	R/W	R/W	R/W
Reset	0	0	1	1	0	0	0	1	0	0	0	0	0	0	0	0

Bit/Field	Name	Type	Reset	Description
15	RESET	R/W	0	Reset Registers When set, this bit resets the PHY layer registers to their default state and reinitializes internal state machines. Once the reset operation has completed, this bit is cleared by hardware.
14	LOOPBK	R/W	0	Loopback Mode When set, this bit enables the Loopback mode of operation. The receiver ignores external inputs and receives the data that is transmitted by the transmitter.
13	SPEEDSL	R/W	1	Speed Select Value Description 1 Enables the 100 Mb/s mode of operation (100BASE-TX). 0 Enables the 10 Mb/s mode of operation (10BASE-T).
12	ANEGEN	R/W	1	Auto-Negotiation Enable When set, this bit enables the auto-negotiation process.
11	PWRDN	R/W	0	Power Down When set, this bit places the PHY layer into a low-power consuming state. All data on the data inputs is ignored.
10	ISO	R/W	0	Isolate When set, this bit isolates the transmit and receive data paths and ignores all data being transmitted and received.
9	RANEG	R/W	0	Restart Auto-Negotiation When set, this bit restarts the auto-negotiation process. Once the restart has initiated, this bit is cleared by hardware.

Bit/Field	Name	Type	Reset	Description
8	DUPLEX	R/W	1	Set Duplex Mode Value Description 1 Enables the Full-Duplex mode of operation. This bit can be set by software in a manual configuration process or by the auto-negotiation process. 0 Enables the Half-Duplex mode of operation.
7	COLT	R/W	0	Collision Test When set, this bit enables the Collision Test mode of operation. The `COLT` bit is set after the initiation of a transmission and is cleared once the transmission is halted.
6:0	reserved	R/W	0x00	Software should not rely on the value of a reserved bit. To provide compatibility with future products, the value of a reserved bit should be preserved across a read-modify-write operation. These bits should always be written as zero.

Register 17: Ethernet PHY Management Register 1 – Status (MR1), address 0x01

This register enables software to determine the capabilities of the PHY layer and perform its initialization and operation appropriately.

Ethernet PHY Management Register 1 – Status (MR1)

Base 0x4004.8000
Address 0x01
Type RO, reset 0x7849

	15	14	13	12	11	10	9	8	7	6	5	4	3	2	1	0
	reserved	100X_F	100X_H	10T_F	10T_H	reserved				MFPS	ANEGC	RFAULT	ANEGA	LINK	JAB	EXTD
Type	RO	RO	RO	RO	RO	RO	RO	RO	RO	RO	RO	RC	RO	RO	RC	RO
Reset	0	1	1	1	1	0	0	0	0	1	0	0	1	0	0	1

Bit/Field	Name	Type	Reset	Description
15	reserved	RO	0	Software should not rely on the value of a reserved bit. To provide compatibility with future products, the value of a reserved bit should be preserved across a read-modify-write operation.
14	100X_F	RO	1	100BASE-TX Full-Duplex Mode When set, this bit indicates that the Ethernet Controller is capable of supporting 100BASE-TX Full-Duplex mode.
13	100X_H	RO	1	100BASE-TX Half-Duplex Mode When set, this bit indicates that the Ethernet Controller is capable of supporting 100BASE-TX Half-Duplex mode.
12	10T_F	RO	1	10BASE-T Full-Duplex Mode When set, this bit indicates that the Ethernet Controller is capable of 10BASE-T Full-Duplex mode.
11	10T_H	RO	1	10BASE-T Half-Duplex Mode When set, this bit indicates that the Ethernet Controller is capable of supporting 10BASE-T Half-Duplex mode.
10:7	reserved	RO	0	Software should not rely on the value of a reserved bit. To provide compatibility with future products, the value of a reserved bit should be preserved across a read-modify-write operation.
6	MFPS	RO	1	Management Frames with Preamble Suppressed When set, this bit indicates that the Management Interface is capable of receiving management frames with the preamble suppressed.
5	ANEGC	RO	0	Auto-Negotiation Complete When set, this bit indicates that the auto-negotiation process has been completed and that the extended registers defined by the auto-negotiation protocol are valid.
4	RFAULT	RC	0	Remote Fault When set, this bit indicates that a remote fault condition has been detected. This bit remains set until it is read, even if the condition no longer exists.

Bit/Field	Name	Type	Reset	Description
3	ANEGA	RO	1	Auto-Negotiation When set, this bit indicates that the Ethernet Controller has the ability to perform auto-negotiation.
2	LINK	RO	0	Link Made When set, this bit indicates that a valid link has been established by the Ethernet Controller.
1	JAB	RC	0	Jabber Condition When set, this bit indicates that a jabber condition has been detected by the Ethernet Controller. This bit remains set until it is read, even if the jabber condition no longer exists.
0	EXTD	RO	1	Extended Capabilities When set, this bit indicates that the Ethernet Controller provides an extended set of capabilities that can be accessed through the extended register set.

Register 18: Ethernet PHY Management Register 2 – PHY Identifier 1 (MR2), address 0x02

This register, along with **MR3**, provides a 32-bit value indicating the manufacturer, model, and revision information.

Ethernet PHY Management Register 2 – PHY Identifier 1 (MR2)

Base 0x4004.8000
Address 0x02
Type RO, reset 0x000E

	15	14	13	12	11	10	9	8	7	6	5	4	3	2	1	0
	OUI[21:6]															
Type	RO	RO	RO	RO	RO	RO	RO	RO	RO	RO	RO	RO	RO	RO	RO	RO
Reset	0	0	0	0	0	0	0	0	0	0	0	0	1	1	1	0

Bit/Field	Name	Type	Reset	Description
15:0	OUI[21:6]	RO	0x000E	Organizationally Unique Identifier[21:6] This field, along with the `OUI[5:0]` field in **MR3**, makes up the Organizationally Unique Identifier indicating the PHY manufacturer.

Register 19: Ethernet PHY Management Register 3 – PHY Identifier 2 (MR3), address 0x03

This register, along with **MR2**, provides a 32-bit value indicating the manufacturer, model, and revision information.

Ethernet PHY Management Register 3 – PHY Identifier 2 (MR3)

Base 0x4004.8000
Address 0x03
Type RO, reset 0x7237

	15	14	13	12	11	10	9	8	7	6	5	4	3	2	1	0
	OUI[5:0]						MN						RN			
Type	RO	RO	RO	RO	RO	RO	RO	RO	RO	RO	RO	RO	RO	RO	RO	RO
Reset	0	1	1	1	0	0	1	0	0	0	1	1	0	1	1	1

Bit/Field	Name	Type	Reset	Description
15:10	OUI[5:0]	RO	0x1C	Organizationally Unique Identifier[5:0] This field, along with the `OUI[21:6]` field in **MR2**, makes up the Organizationally Unique Identifier indicating the PHY manufacturer.
9:4	MN	RO	0x23	Model Number The `MN` field represents the Model Number of the PHY.
3:0	RN	RO	0x7	Revision Number The `RN` field represents the Revision Number of the PHY implementation.

Register 20: Ethernet PHY Management Register 4 – Auto-Negotiation Advertisement (MR4), address 0x04

This register provides the advertised abilities of the Ethernet Controller used during auto-negotiation. Bits 8:5 represent the Technology Ability Field bits. This field can be overwritten by software to auto-negotiate to an alternate common technology. Writing to this register has no effect until auto-negotiation is re-initiated by setting the RANEG bit in the **MR0** register.

Ethernet PHY Management Register 4 – Auto-Negotiation Advertisement (MR4)

Base 0x4004.8000
Address 0x04
Type R/W, reset 0x01E1

	15	14	13	12	11	10	9	8	7	6	5	4	3	2	1	0
	NP	reserved	RF	reserved				A3	A2	A1	A0	S				
Type	RO	RO	R/W	RO	RO	RO	RO	R/W	R/W	R/W	R/W	RO	RO	RO	RO	RO
Reset	0	0	0	0	0	0	0	1	1	1	1	0	0	0	0	1

Bit/Field	Name	Type	Reset	Description
15	NP	RO	0	Next Page When set, this bit indicates the Ethernet Controller is capable of Next Page exchanges to provide more detailed information on the PHY layer's capabilities.
14	reserved	RO	0	Software should not rely on the value of a reserved bit. To provide compatibility with future products, the value of a reserved bit should be preserved across a read-modify-write operation.
13	RF	R/W	0	Remote Fault When set, this bit indicates to the link partner that a Remote Fault condition has been encountered.
12:9	reserved	RO	0x0	Software should not rely on the value of a reserved bit. To provide compatibility with future products, the value of a reserved bit should be preserved across a read-modify-write operation.
8	A3	R/W	1	Technology Ability Field[3] When set, this bit indicates that the Ethernet Controller supports the 100Base-TX full-duplex signaling protocol. If software wants to ensure that this mode is not used, this bit can be cleared and auto-negotiation re-initiated with the RANEG bit in the **MR0** register.
7	A2	R/W	1	Technology Ability Field[2] When set, this bit indicates that the Ethernet Controller supports the 100Base-TX half-duplex signaling protocol. If software wants to ensure that this mode is not used, this bit can be cleared and auto-negotiation re-initiated with the RANEG bit in the **MR0** register.
6	A1	R/W	1	Technology Ability Field[1] When set, this bit indicates that the Ethernet Controller supports the 10BASE-T full-duplex signaling protocol. If software wants to ensure that this mode is not used, this bit can be cleared and auto-negotiation re-initiated with the RANEG bit in the **MR0** register..

Bit/Field	Name	Type	Reset	Description
5	A0	R/W	1	Technology Ability Field[0] When set, this bit indicates that the Ethernet Controller supports the 10BASE-T half-duplex signaling protocol. If software wants to ensure that this mode is not used, this bit can be cleared and auto-negotiation re-initiated with the `RANEG` bit in the **MR0** register..
4:0	S	RO	0x1	Selector Field The `S` field encodes 32 possible messages for communicating between Ethernet Controllers. This field is hard-coded to 0x01, indicating that the Stellaris® Ethernet Controller is *IEEE 802.3* compliant.

Register 21: Ethernet PHY Management Register 5 – Auto-Negotiation Link Partner Base Page Ability (MR5), address 0x05

This register provides the advertised abilities of the link partner's Ethernet Controller that are received and stored during auto-negotiation.

Ethernet PHY Management Register 5 – Auto-Negotiation Link Partner Base Page Ability (MR5)

Base 0x4004.8000
Address 0x05
Type RO, reset 0x0000

	15	14	13	12	11	10	9	8	7	6	5	4	3	2	1	0
	NP	ACK	RF	A[7:0]								S				
Type	RO	RO	RO	RO	RO	RO	RO	RO	RO	RO	RO	RO	RO	RO	RO	RO
Reset	0	0	0	0	0	0	0	0	0	0	0	0	0	0	0	0

Bit/Field	Name	Type	Reset	Description
15	NP	RO	0	Next Page When set, this bit indicates that the link partner's Ethernet Controller is capable of Next page exchanges to provide more detailed information on the Ethernet Controller's capabilities.
14	ACK	RO	0	Acknowledge When set, this bit indicates that the Ethernet Controller has successfully received the link partner's advertised abilities during auto-negotiation.
13	RF	RO	0	Remote Fault Used as a standard transport mechanism for transmitting simple fault information from the link partner.
12:5	A[7:0]	RO	0x00	Technology Ability Field The `A[7:0]` field encodes individual technologies that are supported by the Ethernet Controller. See the **MR4** register for definitions. Note that bits 12:9 describe functions that are not implemented on the Stellaris® Ethernet Controller. Refer to the IEEE 802.3 standard for definitions.
4:0	S	RO	0x00	Selector Field The `S` field encodes possible messages for communicating between Ethernet Controllers.

Value	Description
0x00	Reserved
0x01	IEEE Std 802.3
0x02	IEEE Std 802.9 ISLAN-16T
0x03	IEEE Std 802.5
0x04	IEEE Std 1394
0x05–0x1F	Reserved

Register 22: Ethernet PHY Management Register 6 – Auto-Negotiation Expansion (MR6), address 0x06

This register enables software to determine the auto-negotiation and next page capabilities of the Ethernet Controller and the link partner after auto-negotiation.

Ethernet PHY Management Register 6 – Auto-Negotiation Expansion (MR6)

Base 0x4004.8000
Address 0x06
Type RO, reset 0x0000

	15	14	13	12	11	10	9	8	7	6	5	4	3	2	1	0
	reserved											PDF	LPNPA	reserved	PRX	LPANEGA
Type	RO	RO	RO	RO	RO	RO	RO	RO	RO	RO	RO	RC	RO	RO	RC	RO
Reset	0	0	0	0	0	0	0	0	0	0	0	0	0	0	0	0

Bit/Field	Name	Type	Reset	Description
15:5	reserved	RO	0x000	Software should not rely on the value of a reserved bit. To provide compatibility with future products, the value of a reserved bit should be preserved across a read-modify-write operation.
4	PDF	RC	0	Parallel Detection Fault When set, this bit indicates that more than one technology has been detected at link up. This bit is cleared when read.
3	LPNPA	RO	0	Link Partner is Next Page Able When set, this bit indicates that the link partner is enabled to support next page.
2	reserved	RO	0	Software should not rely on the value of a reserved bit. To provide compatibility with future products, the value of a reserved bit should be preserved across a read-modify-write operation.
1	PRX	RC	0	New Page Received When set, this bit indicates that a new page has been received from the link partner and stored. This bit remains set until the register is read.
0	LPANEGA	RO	0	Link Partner is Auto-Negotiation Able When set, this bit indicates that the link partner is enabled to support auto-negotiation.

Register 23: Ethernet PHY Management Register 16 – Vendor-Specific (MR16), address 0x10

This register enables software to configure the operation of vendor-specific modes of the Ethernet Controller.

Ethernet PHY Management Register 16 – Vendor-Specific (MR16)

Base 0x4004.8000
Address 0x10
Type R/W, reset 0x0140

	15	14	13	12	11	10	9	8	7	6	5	4	3	2	1	0
	RPTR	INPOL	reserved	TXHIM	SQEI	NL10	reserved				APOL	RVSPOL	reserved		PCSBP	RXCC
Type	R/W	R/W0	RO	R/W	R/W	R/W	RO	RO	RO	RO	R/W	R/W	RO	RO	R/W	R/W
Reset	0	0	0	0	0	0	0	1	0	1	0	0	0	0	0	0

Bit/Field	Name	Type	Reset	Description
15	RPTR	R/W	0	Repeater Mode When set, this bit enables the repeater mode of operation. In this mode, full-duplex is not allowed and the Carrier Sense signal only responds to receive activity.
14	INPOL	R/W0	0	Interrupt Polarity Value Description 1 Sets the polarity of the PHY interrupt to be active High. 0 Sets the polarity of the PHY interrupt to active Low. **Important:** Because the Media Access Controller expects active Low interrupts from the PHY, this bit must always be written with a 0 to ensure proper operation.
13	reserved	RO	0	Software should not rely on the value of a reserved bit. To provide compatibility with future products, the value of a reserved bit should be preserved across a read-modify-write operation.
12	TXHIM	R/W	0	Transmit High Impedance Mode When set, this bit enables the transmitter High Impedance mode. In this mode, the `TXOP` and `TXON` transmitter pins are put into a high impedance state. The `RXIP` and `RXIN` pins remain fully functional.
11	SQEI	R/W	0	SQE Inhibit Testing When set, this bit prohibits 10BASE-T SQE testing. When clear, the SQE testing is performed by generating a collision pulse following the completion of the transmission of a frame.
10	NL10	R/W	0	Natural Loopback Mode When set, this bit enables the 10BASE-T Natural Loopback mode. In this mode, the transmission data received by the Ethernet Controller is looped back onto the receive data path when 10BASE-T mode is enabled.
9:6	reserved	RO	0x5	Software should not rely on the value of a reserved bit. To provide compatibility with future products, the value of a reserved bit should be preserved across a read-modify-write operation.

Bit/Field	Name	Type	Reset	Description
5	APOL	R/W	0	Auto-Polarity Disable When set, this bit disables the Ethernet Controller's auto-polarity function. If this bit is clear, the Ethernet Controller automatically inverts the received signal due to a wrong polarity connection during auto-negotiation when in 10BASE-T mode.
4	RVSPOL	R/W	0	Receive Data Polarity This bit indicates whether the receive data pulses are being inverted. If the APOL bit is 0, then the RVSPOL bit is read-only and indicates whether the auto-polarity circuitry is reversing the polarity. In this case, if RVSPOL is set, it indicates that the receive data is inverted; if RVSPOL is clear, it indicates that the receive data is not inverted. If the APOL bit is 1, then the RVSPOL bit is writable and software can force the receive data to be inverted. Setting RVSPOL to 1 forces the receive data to be inverted; clearing RVSPOL does not invert the receive data.
3:2	reserved	RO	0x0	Software should not rely on the value of a reserved bit. To provide compatibility with future products, the value of a reserved bit should be preserved across a read-modify-write operation.
1	PCSBP	R/W	0	PCS Bypass When set, this bit enables the bypass of the PCS and scrambling/descrambling functions in 100BASE-TX mode. This mode is only valid when auto-negotiation is disabled and 100BASE-TX mode is enabled.
0	RXCC	R/W	0	Receive Clock Control When set, this bit enables the Receive Clock Control power saving mode if the Ethernet Controller is configured in 100BASE-TX mode. This mode shuts down the receive clock when no data is being received to save power. This mode should not be used when PCSBP is enabled and is automatically disabled when the LOOPBK bit in the **MR0** register is set.

Register 24: Ethernet PHY Management Register 17 – Interrupt Control/Status (MR17), address 0x11

This register provides the means for controlling and observing the events which trigger a PHY layer interrupt in the **MACRIS** register. This register can also be used in a polling mode via the Media Independent Interface as a means to observe key events within the PHY layer via one register address. Bits 0 through 7 are status bits which are each set based on an event. These bits are cleared after the register is read. Bits 8 through 15 of this register, when set, enable the corresponding bit in the lower byte to signal a PHY layer interrupt in the **MACRIS** register.

Ethernet PHY Management Register 17 – Interrupt Control/Status (MR17)

Base 0x4004.8000
Address 0x11
Type R/W, reset 0x0000

	15	14	13	12	11	10	9	8	7	6	5	4	3	2	1	0
	JABBER_IE	RXER_IE	PRX_IE	PDF_IE	LPACK_IE	LSCHG_IE	RFAULT_IE	ANEGCOMP_IE	JABBER_INT	RXER_INT	PRX_INT	PDF_INT	LPACK_INT	LSCHG_INT	RFAULT_INT	ANEGCOMP_INT
Type	R/W	R/W	R/W	R/W	R/W	R/W	R/W	R/W	RC	RC	RC	RC	RC	RC	RC	RC
Reset	0	0	0	0	0	0	0	0	0	0	0	0	0	0	0	0

Bit/Field	Name	Type	Reset	Description
15	JABBER_IE	R/W	0	Jabber Interrupt Enable When set, this bit enables system interrupts when a Jabber condition is detected by the Ethernet Controller.
14	RXER_IE	R/W	0	Receive Error Interrupt Enable When set, this bit enables system interrupts when a receive error is detected by the Ethernet Controller.
13	PRX_IE	R/W	0	Page Received Interrupt Enable When set, this bit enables system interrupts when a new page is received by the Ethernet Controller.
12	PDF_IE	R/W	0	Parallel Detection Fault Interrupt Enable When set, this bit enables system interrupts when a Parallel Detection Fault is detected by the Ethernet Controller.
11	LPACK_IE	R/W	0	LP Acknowledge Interrupt Enable When set, this bit enables system interrupts when FLP bursts are received with the ACK bit in the **MR5** register during auto-negotiation.
10	LSCHG_IE	R/W	0	Link Status Change Interrupt Enable When set, this bit enables system interrupts when the link status changes from OK to FAIL.
9	RFAULT_IE	R/W	0	Remote Fault Interrupt Enable When set, this bit enables system interrupts when a remote fault condition is signaled by the link partner.
8	ANEGCOMP_IE	R/W	0	Auto-Negotiation Complete Interrupt Enable When set, this bit enables system interrupts when the auto-negotiation sequence has completed successfully.

Bit/Field	Name	Type	Reset	Description
7	JABBER_INT	RC	0	Jabber Event Interrupt When set, this bit indicates that a Jabber event has been detected by the 10BASE-T circuitry.
6	RXER_INT	RC	0	Receive Error Interrupt When set, this bit indicates that a receive error has been detected by the Ethernet Controller.
5	PRX_INT	RC	0	Page Receive Interrupt When set, this bit indicates that a new page has been received from the link partner during auto-negotiation.
4	PDF_INT	RC	0	Parallel Detection Fault Interrupt When set, this bit indicates that a parallel detection fault has been detected by the Ethernet Controller during the auto-negotiation process.
3	LPACK_INT	RC	0	LP Acknowledge Interrupt When set, this bit indicates that an FLP burst has been received with the ACK bit set in the **MR5** register during auto-negotiation.
2	LSCHG_INT	RC	0	Link Status Change Interrupt When set, this bit indicates that the link status has changed from OK to FAIL.
1	RFAULT_INT	RC	0	Remote Fault Interrupt When set, this bit indicates that a remote fault condition has been signaled by the link partner.
0	ANEGCOMP_INT	RC	0	Auto-Negotiation Complete Interrupt When set, this bit indicates that the auto-negotiation sequence has completed successfully.

Register 25: Ethernet PHY Management Register 18 – Diagnostic (MR18), address 0x12

This register enables software to diagnose the results of the previous auto-negotiation.

Ethernet PHY Management Register 18 – Diagnostic (MR18)

Base 0x4004.8000
Address 0x12
Type RO, reset 0x0000

	15	14	13	12	11	10	9	8	7	6	5	4	3	2	1	0
	reserved			ANEGF	DPLX	RATE	RXSD	RX_LOCK	reserved							
Type	RO	RO	RO	RC	RO	RO	RO	RO	RO	RO	RO	RO	RO	RO	RO	RO
Reset	0	0	0	0	0	0	0	0	0	0	0	0	0	0	0	0

Bit/Field	Name	Type	Reset	Description
15:13	reserved	RO	0x0	Software should not rely on the value of a reserved bit. To provide compatibility with future products, the value of a reserved bit should be preserved across a read-modify-write operation.
12	ANEGF	RC	0	Auto-Negotiation Failure When set, this bit indicates that no common technology was found during auto-negotiation and auto-negotiation has failed. This bit remains set until read.
11	DPLX	RO	0	Duplex Mode When set, this bit indicates that Full-Duplex was the highest common denominator found during the auto-negotiation process. Otherwise, Half-Duplex was the highest common denominator found.
10	RATE	RO	0	Rate When set, this bit indicates that 100BASE-TX was the highest common denominator found during the auto-negotiation process. Otherwise, 10BASE-T was the highest common denominator found.
9	RXSD	RO	0	Receive Detection When set, this bit indicates that receive signal detection has occurred (in 100BASE-TX mode) or that Manchester-encoded data has been detected (in 10BASE-T mode).
8	RX_LOCK	RO	0	Receive PLL Lock When set, this bit indicates that the Receive PLL has locked onto the receive signal for the selected speed of operation (10BASE-T or 100BASE-TX).
7:0	reserved	RO	0x00	Software should not rely on the value of a reserved bit. To provide compatibility with future products, the value of a reserved bit should be preserved across a read-modify-write operation.

Register 26: Ethernet PHY Management Register 19 – Transceiver Control (MR19), address 0x13

This register enables software to set the gain of the transmit output to compensate for transformer loss.

Ethernet PHY Management Register 19 – Transceiver Control (MR19)

Base 0x4004.8000
Address 0x13
Type R/W, reset 0x4000

	15	14	13	12	11	10	9	8	7	6	5	4	3	2	1	0
	TXO		reserved													
Type	R/W	R/W	RO	RO	RO	RO	RO	RO	RO	RO	RO	RO	RO	RO	RO	RO
Reset	0	1	0	0	0	0	0	0	0	0	0	0	0	0	0	0

Bit/Field	Name	Type	Reset	Description
15:14	TXO	R/W	0x1	Transmit Amplitude Selection The TXO field sets the transmit output amplitude to account for transmit transformer insertion loss. Value Description 0x0 Gain set for 0.0dB of insertion loss 0x1 Gain set for 0.4dB of insertion loss 0x2 Gain set for 0.8dB of insertion loss 0x3 Gain set for 1.2dB of insertion loss
13:0	reserved	RO	0x000	Software should not rely on the value of a reserved bit. To provide compatibility with future products, the value of a reserved bit should be preserved across a read-modify-write operation.

Register 27: Ethernet PHY Management Register 23 – LED Configuration (MR23), address 0x17

This register enables software to select the source that causes the `LED1` and `LED0` signals to toggle.

Ethernet PHY Management Register 23 – LED Configuration (MR23)

Base 0x4004.8000
Address 0x17
Type R/W, reset 0x0010

	15	14	13	12	11	10	9	8	7	6	5	4	3	2	1	0
	reserved								LED1[3:0]				LED0[3:0]			
Type	RO	RO	RO	RO	RO	RO	RO	RO	R/W	R/W	R/W	R/W	R/W	R/W	R/W	R/W
Reset	0	0	0	0	0	0	0	0	0	0	0	1	0	0	0	0

Bit/Field	Name	Type	Reset	Description
15:8	reserved	RO	0x00	Software should not rely on the value of a reserved bit. To provide compatibility with future products, the value of a reserved bit should be preserved across a read-modify-write operation.
7:4	LED1[3:0]	R/W	0x1	LED1 Source The `LED1` field selects the source that toggles the `LED1` signal. Value Description 0x0 Link OK 0x1 RX or TX Activity (Default LED1) 0x2 Reserved 0x3 Reserved 0x4 Reserved 0x5 100BASE-TX mode 0x6 10BASE-T mode 0x7 Full-Duplex 0x8 Link OK & Blink=RX or TX Activity
3:0	LED0[3:0]	R/W	0x0	LED0 Source The `LED0` field selects the source that toggles the `LED0` signal. Value Description 0x0 Link OK (Default LED0) 0x1 RX or TX Activity 0x2 Reserved 0x3 Reserved 0x4 Reserved 0x5 100BASE-TX mode 0x6 10BASE-T mode 0x7 Full-Duplex 0x8 Link OK & Blink=RX or TX Activity

Register 28: Ethernet PHY Management Register 24 –MDI/MDIX Control (MR24), address 0x18

This register enables software to control the behavior of the MDI/MDIX mux and its switching capabilities.

Ethernet PHY Management Register 24 –MDI/MDIX Control (MR24)

Base 0x4004.8000
Address 0x18
Type R/W, reset 0x00C0

	15	14	13	12	11	10	9	8	7	6	5	4	3	2	1	0
	reserved								PD_MODE	AUTO_SW	MDIX	MDIX_CM	MDIX_SD			
Type	RO	RO	RO	RO	RO	RO	RO	RO	R/W	R/W	R/W	RO	R/W	R/W	R/W	R/W
Reset	0	0	0	0	0	0	0	0	0	0	0	0	0	0	0	0

Bit/Field	Name	Type	Reset	Description
15:8	reserved	RO	0x00	Software should not rely on the value of a reserved bit. To provide compatibility with future products, the value of a reserved bit should be preserved across a read-modify-write operation.
7	PD_MODE	R/W	0	Parallel Detection Mode When set, enables the Parallel Detection mode and allows auto-switching to work when auto-negotiation is not enabled.
6	AUTO_SW	R/W	0	Auto-Switching Enable When set, enables Auto-Switching of the MDI/MDIX mux.
5	MDIX	R/W	0	Auto-Switching Configuration When set, indicates that the MDI/MDIX mux is in the crossover (MDIX) configuration. When 0, it indicates that the mux is in the pass-through (MDI) configuration. When the `AUTO_SW` bit is 1, the `MDIX` bit is read-only. When the `AUTO_SW` bit is 0, the `MDIX` bit is read/write and can be configured manually.
4	MDIX_CM	RO	0	Auto-Switching Complete When set, indicates that the auto-switching sequence has completed. If 0, it indicates that the sequence has not completed or that auto-switching is disabled.
3:0	MDIX_SD	R/W	0x0	Auto-Switching Seed This field provides the initial seed for the switching algorithm. This seed directly affects the number of attempts [5,4] respectively to write bits [3:0]. A 0 sets the seed to 0x5.

18 Analog Comparator

An analog comparator is a peripheral that compares two analog voltages, and provides a logical output that signals the comparison result.

Note: Not all comparators have the option to drive an output pin.

The comparator can provide its output to a device pin, acting as a replacement for an analog comparator on the board, or it can be used to signal the application via interrupts or triggers to the ADC to cause it to start capturing a sample sequence. The interrupt generation and ADC triggering logic is separate. This means, for example, that an interrupt can be generated on a rising edge and the ADC triggered on a falling edge.

The Stellaris® Analog Comparators module has the following features:

- One integrated analog comparator
- Configurable for output to drive an output pin, generate an interrupt, or initiate an ADC sample sequence
- Compare external pin input to external pin input or to internal programmable voltage reference
- Compare a test voltage against any one of these voltages
  - An individual external reference voltage
  - A shared single external reference voltage
  - A shared internal reference voltage

18.1 Block Diagram

Figure 18-1. Analog Comparator Module Block Diagram

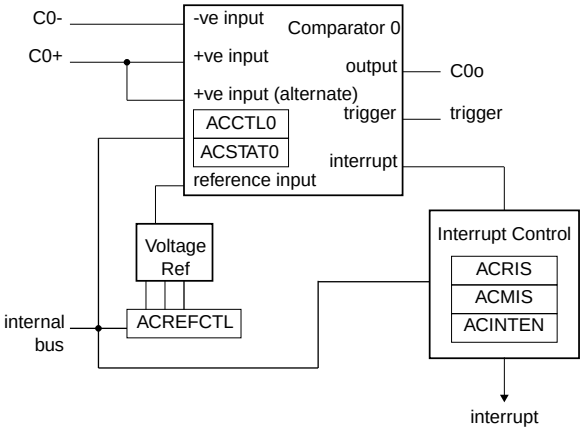

18.2 Functional Description

Important: It is recommended that the Digital-Input enable (the `GPIODEN` bit in the GPIO module) for the analog input pin be disabled to prevent excessive current draw from the I/O pads.

The comparator compares the VIN- and VIN+ inputs to produce an output, VOUT.

```
VIN- < VIN+, VOUT = 1
VIN- > VIN+, VOUT = 0
```

As shown in Figure 18-2 on page 527, the input source for VIN- is an external input. In addition to an external input, input sources for VIN+ can be the +ve input of comparator 0 or an internal reference.

Figure 18-2. Structure of Comparator Unit

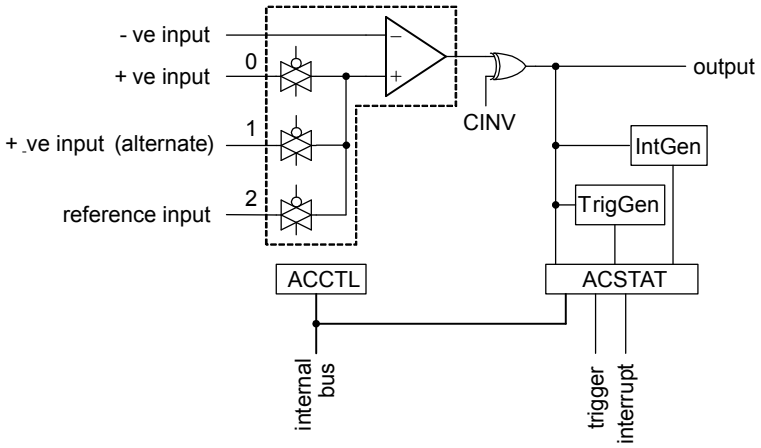

A comparator is configured through two status/control registers (**ACCTL** and **ACSTAT**). The internal reference is configured through one control register (**ACREFCTL**). Interrupt status and control is configured through three registers (**ACMIS**, **ACRIS**, and **ACINTEN**).

Typically, the comparator output is used internally to generate controller interrupts. It may also be used to drive an external pin or generate an analog-to-digital converter (ADC) trigger.

Important: The ASRCP bits in the **ACCTLn** register must be set before using the analog comparators.

18.2.1 Internal Reference Programming

The structure of the internal reference is shown in Figure 18-3 on page 527. This is controlled by a single configuration register (**ACREFCTL**). Table 18-1 on page 528 shows the programming options to develop specific internal reference values, to compare an external voltage against a particular voltage generated internally.

Figure 18-3. Comparator Internal Reference Structure

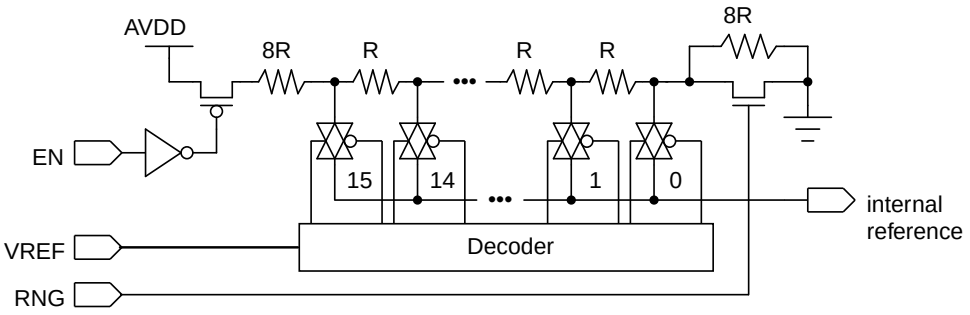

Table 18-1. Internal Reference Voltage and ACREFCTL Field Values

ACREFCTL Register		Output Reference Voltage Based on VREF Field Value
EN Bit Value	RNG Bit Value	
EN=0	RNG=X	0 V (GND) for any value of VREF; however, it is recommended that RNG=1 and VREF=0 for the least noisy ground reference.
EN=1	RNG=0	Total resistance in ladder is 31 R. $V_{REF} = AV_{DD} \times \frac{R_{VREF}}{R_T}$ $V_{REF} = AV_{DD} \times \frac{(VREF + 8)}{31}$ $V_{REF} = 0.85 + 0.106 \times VREF$ The range of internal reference in this mode is 0.85-2.448 V.
	RNG=1	Total resistance in ladder is 23 R. $V_{REF} = AV_{DD} \times \frac{R_{VREF}}{R_T}$ $V_{REF} = AV_{DD} \times \frac{VREF}{23}$ $V_{REF} = 0.143 \times VREF$ The range of internal reference for this mode is 0-2.152 V.

18.3 Initialization and Configuration

The following example shows how to configure an analog comparator to read back its output value from an internal register.

1. Enable the analog comparator 0 clock by writing a value of 0x0010.0000 to the **RCGC1** register in the System Control module.
2. In the GPIO module, enable the GPIO port/pin associated with `C0-` as a GPIO input.
3. Configure the internal voltage reference to 1.65 V by writing the **ACREFCTL** register with the value 0x0000.030C.
4. Configure comparator 0 to use the internal voltage reference and to *not* invert the output by writing the **ACCTL0** register with the value of 0x0000.040C.
5. Delay for some time.
6. Read the comparator output value by reading the **ACSTAT0** register's `OVAL` value.

Change the level of the signal input on `C0-` to see the `OVAL` value change.

18.4 Register Map

Table 18-2 on page 529 lists the comparator registers. The offset listed is a hexadecimal increment to the register's address, relative to the Analog Comparator base address of 0x4003.C000.

Table 18-2. Analog Comparators Register Map

Offset	Name	Type	Reset	Description	See page
0x000	ACMIS	R/W1C	0x0000.0000	Analog Comparator Masked Interrupt Status	530
0x004	ACRIS	RO	0x0000.0000	Analog Comparator Raw Interrupt Status	531
0x008	ACINTEN	R/W	0x0000.0000	Analog Comparator Interrupt Enable	532
0x010	ACREFCTL	R/W	0x0000.0000	Analog Comparator Reference Voltage Control	533
0x020	ACSTAT0	RO	0x0000.0000	Analog Comparator Status 0	534
0x024	ACCTL0	R/W	0x0000.0000	Analog Comparator Control 0	535

18.5 Register Descriptions

The remainder of this section lists and describes the Analog Comparator registers, in numerical order by address offset.

Register 1: Analog Comparator Masked Interrupt Status (ACMIS), offset 0x000

This register provides a summary of the interrupt status (masked) of the comparator.

Analog Comparator Masked Interrupt Status (ACMIS)

Base 0x4003.C000
Offset 0x000
Type R/W1C, reset 0x0000.0000

	31	30	29	28	27	26	25	24	23	22	21	20	19	18	17	16
	reserved															
Type	RO	RO	RO	RO	RO	RO	RO	RO	RO	RO	RO	RO	RO	RO	RO	RO
Reset	0	0	0	0	0	0	0	0	0	0	0	0	0	0	0	0

	15	14	13	12	11	10	9	8	7	6	5	4	3	2	1	0
	reserved															IN0
Type	RO	RO	RO	RO	RO	RO	RO	RO	RO	RO	RO	RO	RO	RO	RO	R/W1C
Reset	0	0	0	0	0	0	0	0	0	0	0	0	0	0	0	0

Bit/Field	Name	Type	Reset	Description
31:1	reserved	RO	0x00	Software should not rely on the value of a reserved bit. To provide compatibility with future products, the value of a reserved bit should be preserved across a read-modify-write operation.
0	IN0	R/W1C	0	Comparator 0 Masked Interrupt Status Gives the masked interrupt state of this interrupt. Write 1 to this bit to clear the pending interrupt.

Register 2: Analog Comparator Raw Interrupt Status (ACRIS), offset 0x004

This register provides a summary of the interrupt status (raw) of the comparator.

Analog Comparator Raw Interrupt Status (ACRIS)

Base 0x4003.C000
Offset 0x004
Type RO, reset 0x0000.0000

	31	30	29	28	27	26	25	24	23	22	21	20	19	18	17	16
	reserved															
Type	RO	RO	RO	RO	RO	RO	RO	RO	RO	RO	RO	RO	RO	RO	RO	RO
Reset	0	0	0	0	0	0	0	0	0	0	0	0	0	0	0	0

	15	14	13	12	11	10	9	8	7	6	5	4	3	2	1	0
	reserved															IN0
Type	RO	RO	RO	RO	RO	RO	RO	RO	RO	RO	RO	RO	RO	RO	RO	RO
Reset	0	0	0	0	0	0	0	0	0	0	0	0	0	0	0	0

Bit/Field	Name	Type	Reset	Description
31:1	reserved	RO	0x00	Software should not rely on the value of a reserved bit. To provide compatibility with future products, the value of a reserved bit should be preserved across a read-modify-write operation.
0	IN0	RO	0	Comparator 0 Interrupt Status When set, indicates that an interrupt has been generated by comparator 0.

Register 3: Analog Comparator Interrupt Enable (ACINTEN), offset 0x008

This register provides the interrupt enable for the comparator.

Analog Comparator Interrupt Enable (ACINTEN)

Base 0x4003.C000
Offset 0x008
Type R/W, reset 0x0000.0000

	31	30	29	28	27	26	25	24	23	22	21	20	19	18	17	16
	reserved															
Type	RO	RO	RO	RO	RO	RO	RO	RO	RO	RO	RO	RO	RO	RO	RO	RO
Reset	0	0	0	0	0	0	0	0	0	0	0	0	0	0	0	0

	15	14	13	12	11	10	9	8	7	6	5	4	3	2	1	0
	reserved															IN0
Type	RO	RO	RO	RO	RO	RO	RO	RO	RO	RO	RO	RO	RO	RO	RO	R/W
Reset	0	0	0	0	0	0	0	0	0	0	0	0	0	0	0	0

Bit/Field	Name	Type	Reset	Description
31:1	reserved	RO	0x00	Software should not rely on the value of a reserved bit. To provide compatibility with future products, the value of a reserved bit should be preserved across a read-modify-write operation.
0	IN0	R/W	0	Comparator 0 Interrupt Enable When set, enables the controller interrupt from the comparator 0 output.

Register 4: Analog Comparator Reference Voltage Control (ACREFCTL), offset 0x010

This register specifies whether the resistor ladder is powered on as well as the range and tap.

Analog Comparator Reference Voltage Control (ACREFCTL)

Base 0x4003.C000
Offset 0x010
Type R/W, reset 0x0000.0000

	31	30	29	28	27	26	25	24	23	22	21	20	19	18	17	16
	reserved															
Type	RO	RO	RO	RO	RO	RO	RO	RO	RO	RO	RO	RO	RO	RO	RO	RO
Reset	0	0	0	0	0	0	0	0	0	0	0	0	0	0	0	0

	15	14	13	12	11	10	9	8	7	6	5	4	3	2	1	0
	reserved						EN	RNG	reserved				VREF			
Type	RO	RO	RO	RO	RO	RO	R/W	R/W	RO	RO	RO	RO	R/W	R/W	R/W	R/W
Reset	0	0	0	0	0	0	0	0	0	0	0	0	0	0	0	0

Bit/Field	Name	Type	Reset	Description
31:10	reserved	RO	0x00	Software should not rely on the value of a reserved bit. To provide compatibility with future products, the value of a reserved bit should be preserved across a read-modify-write operation.
9	EN	R/W	0	Resistor Ladder Enable The EN bit specifies whether the resistor ladder is powered on. If 0, the resistor ladder is unpowered. If 1, the resistor ladder is connected to the analog V_{DD}. This bit is reset to 0 so that the internal reference consumes the least amount of power if not used and programmed.
8	RNG	R/W	0	Resistor Ladder Range The RNG bit specifies the range of the resistor ladder. If 0, the resistor ladder has a total resistance of 31 R. If 1, the resistor ladder has a total resistance of 23 R.
7:4	reserved	RO	0x00	Software should not rely on the value of a reserved bit. To provide compatibility with future products, the value of a reserved bit should be preserved across a read-modify-write operation.
3:0	VREF	R/W	0x00	Resistor Ladder Voltage Ref The VREF bit field specifies the resistor ladder tap that is passed through an analog multiplexer. The voltage corresponding to the tap position is the internal reference voltage available for comparison. See Table 18-1 on page 528 for some output reference voltage examples.

Register 5: Analog Comparator Status 0 (ACSTAT0), offset 0x020

This register specifies the current output value of the comparator.

Analog Comparator Status 0 (ACSTAT0)

Base 0x4003.C000
Offset 0x020
Type RO, reset 0x0000.0000

	31	30	29	28	27	26	25	24	23	22	21	20	19	18	17	16
	reserved															
Type	RO	RO	RO	RO	RO	RO	RO	RO	RO	RO	RO	RO	RO	RO	RO	RO
Reset	0	0	0	0	0	0	0	0	0	0	0	0	0	0	0	0

	15	14	13	12	11	10	9	8	7	6	5	4	3	2	1	0
	reserved														OVAL	reserved
Type	RO	RO	RO	RO	RO	RO	RO	RO	RO	RO	RO	RO	RO	RO	RO	RO
Reset	0	0	0	0	0	0	0	0	0	0	0	0	0	0	0	0

Bit/Field	Name	Type	Reset	Description
31:2	reserved	RO	0x00	Software should not rely on the value of a reserved bit. To provide compatibility with future products, the value of a reserved bit should be preserved across a read-modify-write operation.
1	OVAL	RO	0	Comparator Output Value The 0VAL bit specifies the current output value of the comparator.
0	reserved	RO	0	Software should not rely on the value of a reserved bit. To provide compatibility with future products, the value of a reserved bit should be preserved across a read-modify-write operation.

Register 6: Analog Comparator Control 0 (ACCTL0), offset 0x024

This register configures the comparator's input and output.

Analog Comparator Control 0 (ACCTL0)

Base 0x4003.C000
Offset 0x024
Type R/W, reset 0x0000.0000

	31	30	29	28	27	26	25	24	23	22	21	20	19	18	17	16
	reserved															
Type	RO	RO	RO	RO	RO	RO	RO	RO	RO	RO	RO	RO	RO	RO	RO	RO
Reset	0	0	0	0	0	0	0	0	0	0	0	0	0	0	0	0

	15	14	13	12	11	10	9	8	7	6	5	4	3	2	1	0
	reserved				TOEN	ASRCP		reserved	TSLVAL	TSEN		ISLVAL	ISEN		CINV	reserved
Type	RO	RO	RO	RO	R/W	R/W	R/W	RO	R/W	R/W	R/W	R/W	R/W	R/W	R/W	RO
Reset	0	0	0	0	0	0	0	0	0	0	0	0	0	0	0	0

Bit/Field	Name	Type	Reset	Description
31:12	reserved	RO	0x00	Software should not rely on the value of a reserved bit. To provide compatibility with future products, the value of a reserved bit should be preserved across a read-modify-write operation.
11	TOEN	R/W	0	Trigger Output Enable The TOEN bit enables the ADC event transmission to the ADC. If 0, the event is suppressed and not sent to the ADC. If 1, the event is transmitted to the ADC.
10:9	ASRCP	R/W	0x00	Analog Source Positive The ASRCP field specifies the source of input voltage to the VIN+ terminal of the comparator. The encodings for this field are as follows: Value Function 0x0 Pin value 0x1 Pin value of C0+ 0x2 Internal voltage reference 0x3 Reserved
8	reserved	RO	0	Software should not rely on the value of a reserved bit. To provide compatibility with future products, the value of a reserved bit should be preserved across a read-modify-write operation.
7	TSLVAL	R/W	0	Trigger Sense Level Value The TSLVAL bit specifies the sense value of the input that generates an ADC event if in Level Sense mode. If 0, an ADC event is generated if the comparator output is Low. Otherwise, an ADC event is generated if the comparator output is High.

Bit/Field	Name	Type	Reset	Description
6:5	TSEN	R/W	0x0	Trigger Sense The `TSEN` field specifies the sense of the comparator output that generates an ADC event. The sense conditioning is as follows: Value Function 0x0 Level sense, see `TSLVAL` 0x1 Falling edge 0x2 Rising edge 0x3 Either edge
4	ISLVAL	R/W	0	Interrupt Sense Level Value The `ISLVAL` bit specifies the sense value of the input that generates an interrupt if in Level Sense mode. If 0, an interrupt is generated if the comparator output is Low. Otherwise, an interrupt is generated if the comparator output is High.
3:2	ISEN	R/W	0x0	Interrupt Sense The `ISEN` field specifies the sense of the comparator output that generates an interrupt. The sense conditioning is as follows: Value Function 0x0 Level sense, see `ISLVAL` 0x1 Falling edge 0x2 Rising edge 0x3 Either edge
1	CINV	R/W	0	Comparator Output Invert The `CINV` bit conditionally inverts the output of the comparator. If 0, the output of the comparator is unchanged. If 1, the output of the comparator is inverted prior to being processed by hardware.
0	reserved	RO	0	Software should not rely on the value of a reserved bit. To provide compatibility with future products, the value of a reserved bit should be preserved across a read-modify-write operation.

19 Pulse Width Modulator (PWM)

Pulse width modulation (PWM) is a powerful technique for digitally encoding analog signal levels. High-resolution counters are used to generate a square wave, and the duty cycle of the square wave is modulated to encode an analog signal. Typical applications include switching power supplies and motor control.

The Stellaris® PWM module consists of three PWM generator blocks and a control block. The control block determines the polarity of the PWM signals, and which signals are passed through to the pins.

Each PWM generator block produces two PWM signals that can either be independent signals (other than being based on the same timer and therefore having the same frequency) or a single pair of complementary signals with dead-band delays inserted. The output of the PWM generation blocks are managed by the output control block before being passed to the device pins.

The Stellaris® PWM module provides a great deal of flexibility. It can generate simple PWM signals, such as those required by a simple charge pump. It can also generate paired PWM signals with dead-band delays, such as those required by a half-H bridge driver. Three generator blocks can also generate the full six channels of gate controls required by a 3-phase inverter bridge.

Each Stellaris® PWM module has the following features:

- Three PWM generator blocks, each with one 16-bit counter, two PWM comparators, a PWM signal generator, a dead-band generator, and an interrupt/ADC-trigger selector
- One 16-bit counter
  - Runs in Down or Up/Down mode
  - Output frequency controlled by a 16-bit load value
  - Load value updates can be synchronized
  - Produces output signals at zero and load value
- Two PWM comparators
  - Comparator value updates can be synchronized
  - Produces output signals on match
- PWM generator
  - Output PWM signal is constructed based on actions taken as a result of the counter and PWM comparator output signals
  - Produces two independent PWM signals
- Dead-band generator
  - Produces two PWM signals with programmable dead-band delays suitable for driving a half-H bridge
  - Can be bypassed, leaving input PWM signals unmodified
- Flexible output control block with PWM output enable of each PWM signal

- PWM output enable of each PWM signal
- Optional output inversion of each PWM signal (polarity control)
- Optional fault handling for each PWM signal
- Synchronization of timers in the PWM generator blocks
- Synchronization of timer/comparator updates across the PWM generator blocks
- Interrupt status summary of the PWM generator blocks

■ Can initiate an ADC sample sequence

19.1 Block Diagram

Figure 19-1 on page 538 provides the Stellaris® PWM module unit diagram and Figure 19-2 on page 539 provides a more detailed diagram of a Stellaris® PWM generator. The LM3S8962 controller contains three generator blocks (PWM0, PWM1, and PWM2) and generates six independent PWM signals or three paired PWM signals with dead-band delays inserted.

Figure 19-1. PWM Unit Diagram

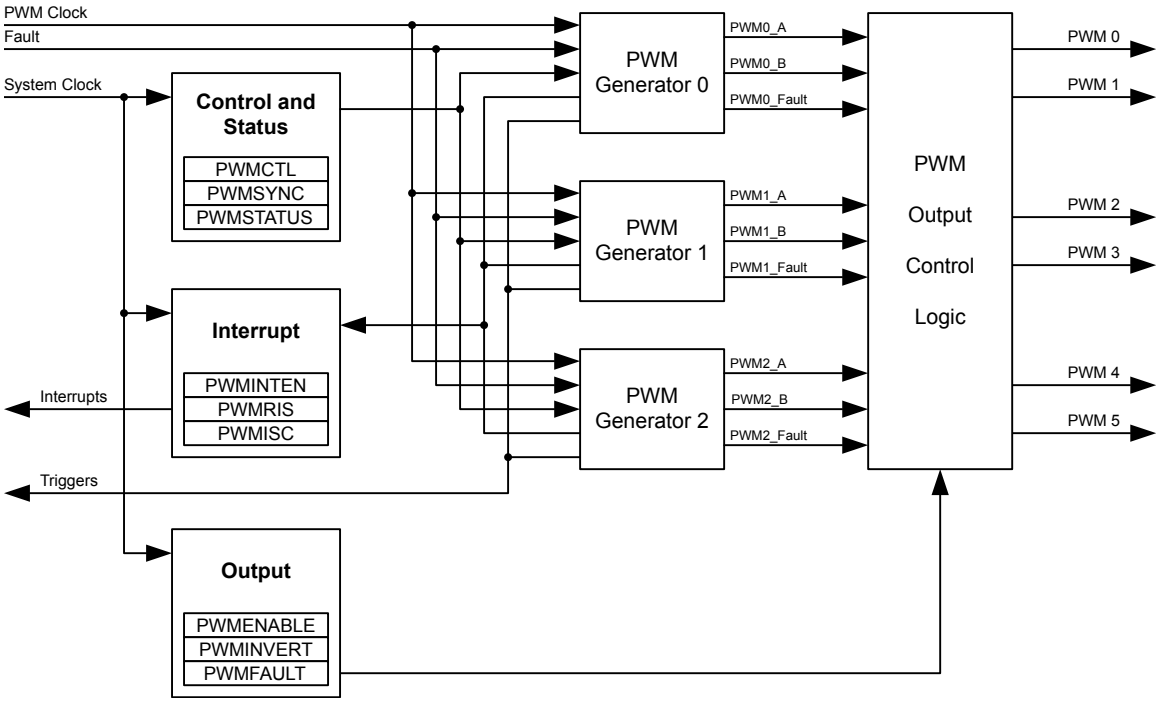

Figure 19-2. PWM Module Block Diagram

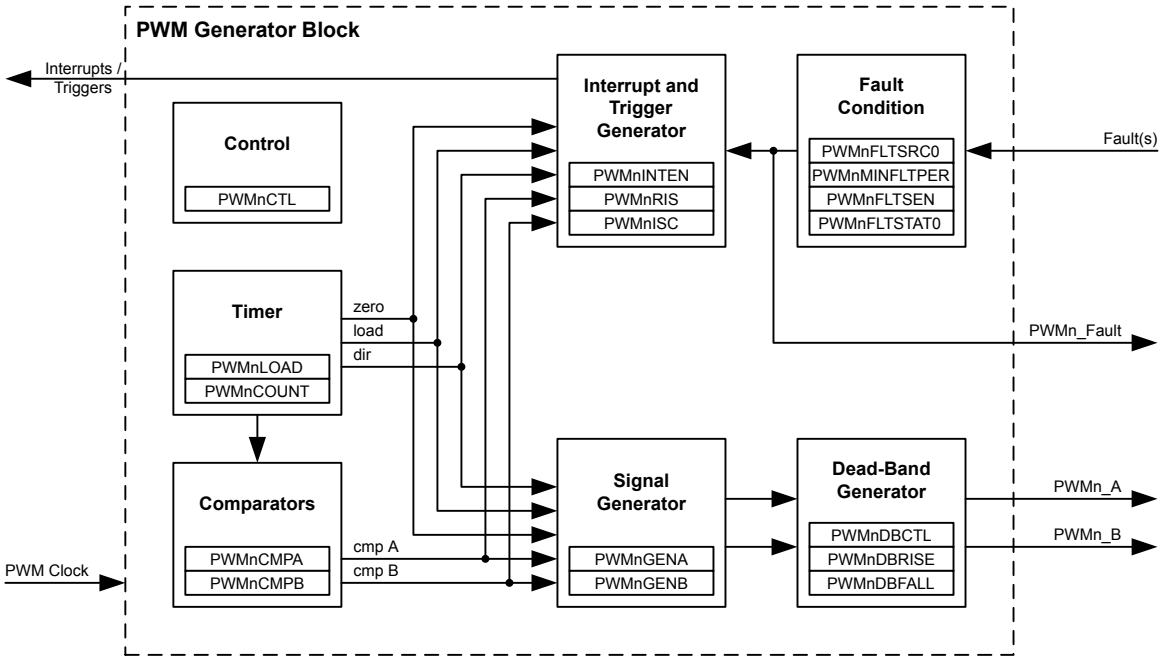

19.2 Functional Description

19.2.1 PWM Timer

The timer in each PWM generator runs in one of two modes: Count-Down mode or Count-Up/Down mode. In Count-Down mode, the timer counts from the load value to zero, goes back to the load value, and continues counting down. In Count-Up/Down mode, the timer counts from zero up to the load value, back down to zero, back up to the load value, and so on. Generally, Count-Down mode is used for generating left- or right-aligned PWM signals, while the Count-Up/Down mode is used for generating center-aligned PWM signals.

The timers output three signals that are used in the PWM generation process: the direction signal (this is always Low in Count-Down mode, but alternates between Low and High in Count-Up/Down mode), a single-clock-cycle-width High pulse when the counter is zero, and a single-clock-cycle-width High pulse when the counter is equal to the load value. Note that in Count-Down mode, the zero pulse is immediately followed by the load pulse.

19.2.2 PWM Comparators

There are two comparators in each PWM generator that monitor the value of the counter; when either match the counter, they output a single-clock-cycle-width High pulse. When in Count-Up/Down mode, these comparators match both when counting up and when counting down; they are therefore qualified by the counter direction signal. These qualified pulses are used in the PWM generation process. If either comparator match value is greater than the counter load value, then that comparator never outputs a High pulse.

Figure 19-3 on page 540 shows the behavior of the counter and the relationship of these pulses when the counter is in Count-Down mode. Figure 19-4 on page 540 shows the behavior of the counter and the relationship of these pulses when the counter is in Count-Up/Down mode.

Figure 19-3. PWM Count-Down Mode

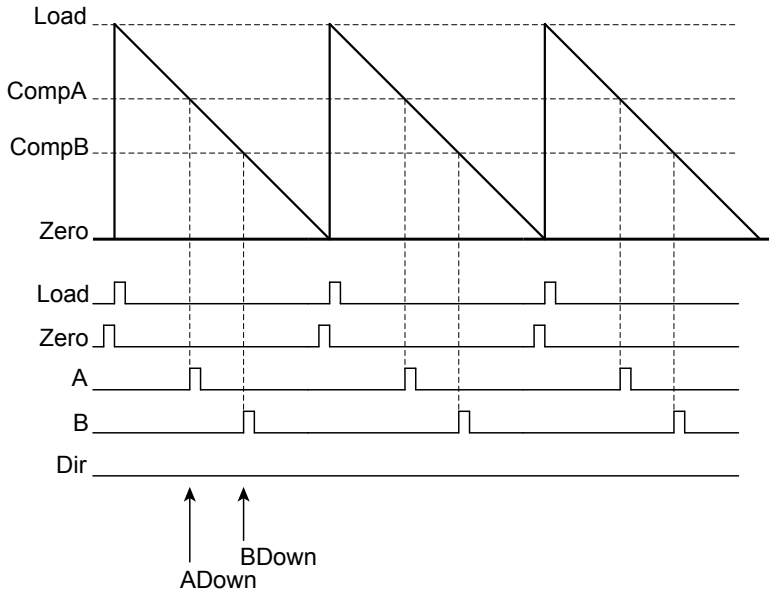

Figure 19-4. PWM Count-Up/Down Mode

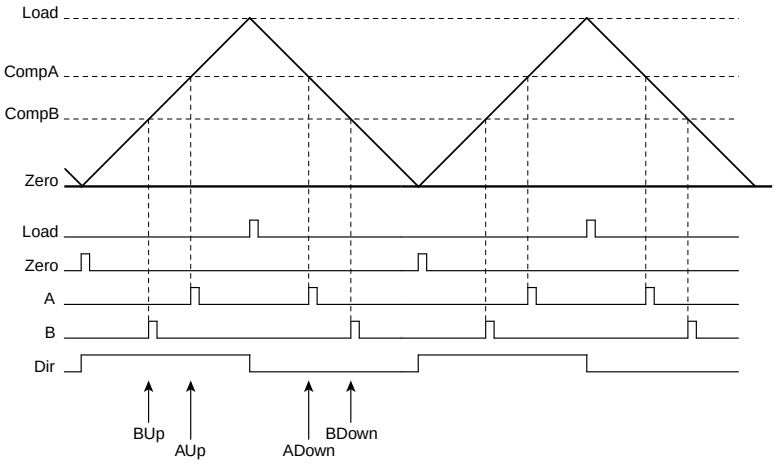

19.2.3 PWM Signal Generator

The PWM generator takes these pulses (qualified by the direction signal), and generates two PWM signals. In Count-Down mode, there are four events that can affect the PWM signal: zero, load, match A down, and match B down. In Count-Up/Down mode, there are six events that can affect the PWM signal: zero, load, match A down, match A up, match B down, and match B up. The match A or match B events are ignored when they coincide with the zero or load events. If the match A and match B events coincide, the first signal, `PWMA`, is generated based only on the match A event, and the second signal, `PWMB`, is generated based only on the match B event.

For each event, the effect on each output PWM signal is programmable: it can be left alone (ignoring the event), it can be toggled, it can be driven Low, or it can be driven High. These actions can be used to generate a pair of PWM signals of various positions and duty cycles, which do or do not overlap. Figure 19-5 on page 541 shows the use of Count-Up/Down mode to generate a pair of center-aligned, overlapped PWM signals that have different duty cycles.

Figure 19-5. PWM Generation Example In Count-Up/Down Mode

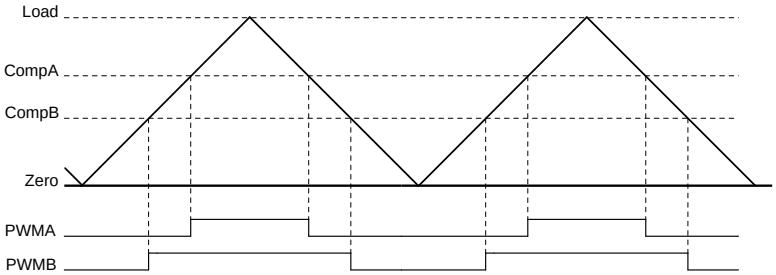

In this example, the first generator is set to drive High on match A up, drive Low on match A down, and ignore the other four events. The second generator is set to drive High on match B up, drive Low on match B down, and ignore the other four events. Changing the value of comparator A changes the duty cycle of the `PWMA` signal, and changing the value of comparator B changes the duty cycle of the `PWMB` signal.

19.2.4 Dead-Band Generator

The two PWM signals produced by the PWM generator are passed to the dead-band generator. If disabled, the PWM signals simply pass through unmodified. If enabled, the second PWM signal is lost and two PWM signals are generated based on the first PWM signal. The first output PWM signal is the input signal with the rising edge delayed by a programmable amount. The second output PWM signal is the inversion of the input signal with a programmable delay added between the falling edge of the input signal and the rising edge of this new signal.

This is therefore a pair of active High signals where one is always High, except for a programmable amount of time at transitions where both are Low. These signals are therefore suitable for driving a half-H bridge, with the dead-band delays preventing shoot-through current from damaging the power electronics. Figure 19-6 on page 541 shows the effect of the dead-band generator on an input PWM signal.

Figure 19-6. PWM Dead-Band Generator

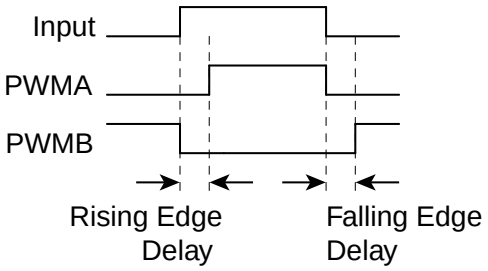

19.2.5 Interrupt/ADC-Trigger Selector

The PWM generator also takes the same four (or six) counter events and uses them to generate an interrupt or an ADC trigger. Any of these events or a set of these events can be selected as a source for an interrupt; when any of the selected events occur, an interrupt is generated. Additionally, the same event, a different event, the same set of events, or a different set of events can be selected as a source for an ADC trigger; when any of these selected events occur, an ADC trigger pulse is generated. The selection of events allows the interrupt or ADC trigger to occur at a specific position within the PWM signal. Note that interrupts and ADC triggers are based on the raw events; delays in the PWM signal edges caused by the dead-band generator are not taken into account.

19.2.6 Synchronization Methods

There is a global reset capability that can synchronously reset any or all of the counters in the PWM generators. If multiple PWM generators are configured with the same counter load value, this can be used to guarantee that they also have the same count value (this does imply that the PWM generators must be configured before they are synchronized). With this, more than two PWM signals can be produced with a known relationship between the edges of those signals since the counters always have the same values.

The counter load values and comparator match values of the PWM generator can be updated in two ways. The first is immediate update mode, where a new value is used as soon as the counter reaches zero. By waiting for the counter to reach zero, a guaranteed behavior is defined, and overly short or overly long output PWM pulses are prevented.

The other update method is synchronous, where the new value is not used until a global synchronized update signal is asserted, at which point the new value is used as soon as the counter reaches zero. This second mode allows multiple items in multiple PWM generators to be updated simultaneously without odd effects during the update; everything runs from the old values until a point at which they all run from the new values. The Update mode of the load and comparator match values can be individually configured in each PWM generator block. It typically makes sense to use the synchronous update mechanism across PWM generator blocks when the timers in those blocks are synchronized, though this is not required in order for this mechanism to function properly.

19.2.7 Fault Conditions

There are two external conditions that affect the PWM block; the signal input on the Fault pin and the stalling of the controller by a debugger. There are two mechanisms available to handle such conditions: the output signals can be forced into an inactive state and/or the PWM timers can be stopped.

Each output signal has a fault bit. If set, a fault input signal causes the corresponding output signal to go into the inactive state. If the inactive state is a safe condition for the signal to be in for an extended period of time, this keeps the output signal from driving the outside world in a dangerous manner during the fault condition. A fault condition can also generate a controller interrupt.

Each PWM generator can also be configured to stop counting during a stall condition. The user can select for the counters to run until they reach zero then stop, or to continue counting and reloading. A stall condition does not generate a controller interrupt.

19.2.8 Output Control Block

With each PWM generator block producing two raw PWM signals, the output control block takes care of the final conditioning of the PWM signals before they go to the pins. Via a single register, the set of PWM signals that are actually enabled to the pins can be modified; this can be used, for example, to perform commutation of a brushless DC motor with a single register write (and without modifying the individual PWM generators, which are modified by the feedback control loop). Similarly, fault control can disable any of the PWM signals as well. A final inversion can be applied to any of the PWM signals, making them active Low instead of the default active High.

19.3 Initialization and Configuration

The following example shows how to initialize the PWM Generator 0 with a 25-KHz frequency, and with a 25% duty cycle on the `PWM0` pin and a 75% duty cycle on the `PWM1` pin. This example assumes the system clock is 20 MHz.

1. Enable the PWM clock by writing a value of 0x0010.0000 to the **RCGC0** register in the System Control module.
2. Enable the clock to the appropriate GPIO module via the **RCGC2** register in the System Control module.
3. In the GPIO module, enable the appropriate pins for their alternate function using the **GPIOAFSEL** register.
4. Configure the **Run-Mode Clock Configuration (RCC)** register in the System Control module to use the PWM divide (`USEPWMDIV`) and set the divider (`PWMDIV`) to divide by 2 (000).
5. Configure the PWM generator for countdown mode with immediate updates to the parameters.
   - Write the **PWM0CTL** register with a value of 0x0000.0000.
   - Write the **PWM0GENA** register with a value of 0x0000.008C.
   - Write the **PWM0GENB** register with a value of 0x0000.080C.
6. Set the period. For a 25-KHz frequency, the period = 1/25,000, or 40 microseconds. The PWM clock source is 10 MHz; the system clock divided by 2. This translates to 400 clock ticks per period. Use this value to set the **PWM0LOAD** register. In Count-Down mode, set the `Load` field in the **PWM0LOAD** register to the requested period minus one.
   - Write the **PWM0LOAD** register with a value of 0x0000.018F.
7. Set the pulse width of the `PWM0` pin for a 25% duty cycle.
   - Write the **PWM0CMPA** register with a value of 0x0000.012B.
8. Set the pulse width of the `PWM1` pin for a 75% duty cycle.
   - Write the **PWM0CMPB** register with a value of 0x0000.0063.
9. Start the timers in PWM generator 0.
   - Write the **PWM0CTL** register with a value of 0x0000.0001.
10. Enable PWM outputs.
    - Write the **PWMENABLE** register with a value of 0x0000.0003.

19.4 Register Map

Table 19-1 on page 543 lists the PWM registers. The offset listed is a hexadecimal increment to the register's address, relative to the PWM base address of 0x4002.8000.

Table 19-1. PWM Register Map

Offset	Name	Type	Reset	Description	See page
0x000	PWMCTL	R/W	0x0000.0000	PWM Master Control	546
0x004	PWMSYNC	R/W	0x0000.0000	PWM Time Base Sync	547

Offset	Name	Type	Reset	Description	See page
0x008	PWMENABLE	R/W	0x0000.0000	PWM Output Enable	548
0x00C	PWMINVERT	R/W	0x0000.0000	PWM Output Inversion	549
0x010	PWMFAULT	R/W	0x0000.0000	PWM Output Fault	550
0x014	PWMINTEN	R/W	0x0000.0000	PWM Interrupt Enable	551
0x018	PWMRIS	RO	0x0000.0000	PWM Raw Interrupt Status	552
0x01C	PWMISC	R/W1C	0x0000.0000	PWM Interrupt Status and Clear	553
0x020	PWMSTATUS	RO	0x0000.0000	PWM Status	554
0x040	PWM0CTL	R/W	0x0000.0000	PWM0 Control	555
0x044	PWM0INTEN	R/W	0x0000.0000	PWM0 Interrupt and Trigger Enable	557
0x048	PWM0RIS	RO	0x0000.0000	PWM0 Raw Interrupt Status	559
0x04C	PWM0ISC	R/W1C	0x0000.0000	PWM0 Interrupt Status and Clear	560
0x050	PWM0LOAD	R/W	0x0000.0000	PWM0 Load	561
0x054	PWM0COUNT	RO	0x0000.0000	PWM0 Counter	562
0x058	PWM0CMPA	R/W	0x0000.0000	PWM0 Compare A	563
0x05C	PWM0CMPB	R/W	0x0000.0000	PWM0 Compare B	564
0x060	PWM0GENA	R/W	0x0000.0000	PWM0 Generator A Control	565
0x064	PWM0GENB	R/W	0x0000.0000	PWM0 Generator B Control	568
0x068	PWM0DBCTL	R/W	0x0000.0000	PWM0 Dead-Band Control	571
0x06C	PWM0DBRISE	R/W	0x0000.0000	PWM0 Dead-Band Rising-Edge Delay	572
0x070	PWM0DBFALL	R/W	0x0000.0000	PWM0 Dead-Band Falling-Edge-Delay	573
0x080	PWM1CTL	R/W	0x0000.0000	PWM1 Control	555
0x084	PWM1INTEN	R/W	0x0000.0000	PWM1 Interrupt and Trigger Enable	557
0x088	PWM1RIS	RO	0x0000.0000	PWM1 Raw Interrupt Status	559
0x08C	PWM1ISC	R/W1C	0x0000.0000	PWM1 Interrupt Status and Clear	560
0x090	PWM1LOAD	R/W	0x0000.0000	PWM1 Load	561
0x094	PWM1COUNT	RO	0x0000.0000	PWM1 Counter	562
0x098	PWM1CMPA	R/W	0x0000.0000	PWM1 Compare A	563
0x09C	PWM1CMPB	R/W	0x0000.0000	PWM1 Compare B	564
0x0A0	PWM1GENA	R/W	0x0000.0000	PWM1 Generator A Control	565
0x0A4	PWM1GENB	R/W	0x0000.0000	PWM1 Generator B Control	568
0x0A8	PWM1DBCTL	R/W	0x0000.0000	PWM1 Dead-Band Control	571
0x0AC	PWM1DBRISE	R/W	0x0000.0000	PWM1 Dead-Band Rising-Edge Delay	572
0x0B0	PWM1DBFALL	R/W	0x0000.0000	PWM1 Dead-Band Falling-Edge-Delay	573

Offset	Name	Type	Reset	Description	See page
0x0C0	PWM2CTL	R/W	0x0000.0000	PWM2 Control	555
0x0C4	PWM2INTEN	R/W	0x0000.0000	PWM2 Interrupt and Trigger Enable	557
0x0C8	PWM2RIS	RO	0x0000.0000	PWM2 Raw Interrupt Status	559
0x0CC	PWM2ISC	R/W1C	0x0000.0000	PWM2 Interrupt Status and Clear	560
0x0D0	PWM2LOAD	R/W	0x0000.0000	PWM2 Load	561
0x0D4	PWM2COUNT	RO	0x0000.0000	PWM2 Counter	562
0x0D8	PWM2CMPA	R/W	0x0000.0000	PWM2 Compare A	563
0x0DC	PWM2CMPB	R/W	0x0000.0000	PWM2 Compare B	564
0x0E0	PWM2GENA	R/W	0x0000.0000	PWM2 Generator A Control	565
0x0E4	PWM2GENB	R/W	0x0000.0000	PWM2 Generator B Control	568
0x0E8	PWM2DBCTL	R/W	0x0000.0000	PWM2 Dead-Band Control	571
0x0EC	PWM2DBRISE	R/W	0x0000.0000	PWM2 Dead-Band Rising-Edge Delay	572
0x0F0	PWM2DBFALL	R/W	0x0000.0000	PWM2 Dead-Band Falling-Edge-Delay	573

19.5 Register Descriptions

The remainder of this section lists and describes the PWM registers, in numerical order by address offset.

Register 1: PWM Master Control (PWMCTL), offset 0x000

This register provides master control over the PWM generation blocks.

PWM Master Control (PWMCTL)

Base 0x4002.8000
Offset 0x000
Type R/W, reset 0x0000.0000

	31	30	29	28	27	26	25	24	23	22	21	20	19	18	17	16
	reserved															
Type	RO	RO	RO	RO	RO	RO	RO	RO	RO	RO	RO	RO	RO	RO	RO	RO
Reset	0	0	0	0	0	0	0	0	0	0	0	0	0	0	0	0

	15	14	13	12	11	10	9	8	7	6	5	4	3	2	1	0
	reserved													GlobalSync2	GlobalSync1	GlobalSync0
Type	RO	RO	RO	RO	RO	RO	RO	RO	RO	RO	RO	RO	RO	R/W	R/W	R/W
Reset	0	0	0	0	0	0	0	0	0	0	0	0	0	0	0	0

Bit/Field	Name	Type	Reset	Description
31:3	reserved	RO	0x00	Software should not rely on the value of a reserved bit. To provide compatibility with future products, the value of a reserved bit should be preserved across a read-modify-write operation.
2	GlobalSync2	R/W	0	Update PWM Generator 2 Same as `GlobalSync0` but for PWM generator 2.
1	GlobalSync1	R/W	0	Update PWM Generator 1 Same as `GlobalSync0` but for PWM generator 1.
0	GlobalSync0	R/W	0	Update PWM Generator 0 Setting this bit causes any queued update to a load or comparator register in PWM generator 0 to be applied the next time the corresponding counter becomes zero. This bit automatically clears when the updates have completed; it cannot be cleared by software.

Register 2: PWM Time Base Sync (PWMSYNC), offset 0x004

This register provides a method to perform synchronization of the counters in the PWM generation blocks. Writing a bit in this register to 1 causes the specified counter to reset back to 0; writing multiple bits resets multiple counters simultaneously. The bits auto-clear after the reset has occurred; reading them back as zero indicates that the synchronization has completed.

PWM Time Base Sync (PWMSYNC)

Base 0x4002.8000
Offset 0x004
Type R/W, reset 0x0000.0000

	31	30	29	28	27	26	25	24	23	22	21	20	19	18	17	16
	reserved															
Type	RO	RO	RO	RO	RO	RO	RO	RO	RO	RO	RO	RO	RO	RO	RO	RO
Reset	0	0	0	0	0	0	0	0	0	0	0	0	0	0	0	0

	15	14	13	12	11	10	9	8	7	6	5	4	3	2	1	0
	reserved													Sync2	Sync1	Sync0
Type	RO	RO	RO	RO	RO	RO	RO	RO	RO	RO	RO	RO	RO	R/W	R/W	R/W
Reset	0	0	0	0	0	0	0	0	0	0	0	0	0	0	0	0

Bit/Field	Name	Type	Reset	Description
31:3	reserved	RO	0x00	Software should not rely on the value of a reserved bit. To provide compatibility with future products, the value of a reserved bit should be preserved across a read-modify-write operation.
2	Sync2	R/W	0	Reset Generator 2 Counter Performs a reset of the PWM generator 2 counter.
1	Sync1	R/W	0	Reset Generator 1 Counter Performs a reset of the PWM generator 1 counter.
0	Sync0	R/W	0	Reset Generator 0 Counter Performs a reset of the PWM generator 0 counter.

Register 3: PWM Output Enable (PWMENABLE), offset 0x008

This register provides a master control of which generated PWM signals are output to device pins. By disabling a PWM output, the generation process can continue (for example, when the time bases are synchronized) without driving PWM signals to the pins. When bits in this register are set, the corresponding PWM signal is passed through to the output stage, which is controlled by the **PWMINVERT** register. When bits are not set, the PWM signal is replaced by a zero value which is also passed to the output stage.

PWM Output Enable (PWMENABLE)

Base 0x4002.8000
Offset 0x008
Type R/W, reset 0x0000.0000

	31	30	29	28	27	26	25	24	23	22	21	20	19	18	17	16
	reserved															
Type	RO	RO	RO	RO	RO	RO	RO	RO	RO	RO	RO	RO	RO	RO	RO	RO
Reset	0	0	0	0	0	0	0	0	0	0	0	0	0	0	0	0

	15	14	13	12	11	10	9	8	7	6	5	4	3	2	1	0
	reserved										PWM5En	PWM4En	PWM3En	PWM2En	PWM1En	PWM0En
Type	RO	RO	RO	RO	RO	RO	RO	RO	RO	RO	R/W	R/W	R/W	R/W	R/W	R/W
Reset	0	0	0	0	0	0	0	0	0	0	0	0	0	0	0	0

Bit/Field	Name	Type	Reset	Description
31:6	reserved	RO	0x00	Software should not rely on the value of a reserved bit. To provide compatibility with future products, the value of a reserved bit should be preserved across a read-modify-write operation.
5	PWM5En	R/W	0	PWM5 Output Enable When set, allows the generated `PWM5` signal to be passed to the device pin.
4	PWM4En	R/W	0	PWM4 Output Enable When set, allows the generated `PWM4` signal to be passed to the device pin.
3	PWM3En	R/W	0	PWM3 Output Enable When set, allows the generated `PWM3` signal to be passed to the device pin.
2	PWM2En	R/W	0	PWM2 Output Enable When set, allows the generated `PWM2` signal to be passed to the device pin.
1	PWM1En	R/W	0	PWM1 Output Enable When set, allows the generated `PWM1` signal to be passed to the device pin.
0	PWM0En	R/W	0	PWM0 Output Enable When set, allows the generated `PWM0` signal to be passed to the device pin.

Register 4: PWM Output Inversion (PWMINVERT), offset 0x00C

This register provides a master control of the polarity of the PWM signals on the device pins. The PWM signals generated by the PWM generator are active High; they can optionally be made active Low via this register. Disabled PWM channels are also passed through the output inverter (if so configured) so that inactive channels maintain the correct polarity.

PWM Output Inversion (PWMINVERT)

Base 0x4002.8000
Offset 0x00C
Type R/W, reset 0x0000.0000

	31	30	29	28	27	26	25	24	23	22	21	20	19	18	17	16
	reserved															
Type	RO	RO	RO	RO	RO	RO	RO	RO	RO	RO	RO	RO	RO	RO	RO	RO
Reset	0	0	0	0	0	0	0	0	0	0	0	0	0	0	0	0

	15	14	13	12	11	10	9	8	7	6	5	4	3	2	1	0
	reserved										PWM5Inv	PWM4Inv	PWM3Inv	PWM2Inv	PWM1Inv	PWM0Inv
Type	RO	RO	RO	RO	RO	RO	RO	RO	RO	RO	R/W	R/W	R/W	R/W	R/W	R/W
Reset	0	0	0	0	0	0	0	0	0	0	0	0	0	0	0	0

Bit/Field	Name	Type	Reset	Description
31:6	reserved	RO	0x00	Software should not rely on the value of a reserved bit. To provide compatibility with future products, the value of a reserved bit should be preserved across a read-modify-write operation.
5	PWM5Inv	R/W	0	Invert `PWM5` Signal When set, the generated `PWM5` signal is inverted.
4	PWM4Inv	R/W	0	Invert `PWM4` Signal When set, the generated `PWM4` signal is inverted.
3	PWM3Inv	R/W	0	Invert `PWM3` Signal When set, the generated `PWM3` signal is inverted.
2	PWM2Inv	R/W	0	Invert `PWM2` Signal When set, the generated `PWM2` signal is inverted.
1	PWM1Inv	R/W	0	Invert `PWM1` Signal When set, the generated `PWM1` signal is inverted.
0	PWM0Inv	R/W	0	Invert `PWM0` Signal When set, the generated `PWM0` signal is inverted.

Register 5: PWM Output Fault (PWMFAULT), offset 0x010

This register controls the behavior of the PWM outputs in the presence of fault conditions. Both the fault inputs and debug events are considered fault conditions. On a fault condition, each PWM signal can be passed through unmodified or driven Low. For outputs that are configured for pass-through, the debug event handling on the corresponding PWM generator also determines if the PWM signal continues to be generated.

Fault condition control occurs before the output inverter, so PWM signals driven Low on fault are inverted if the channel is configured for inversion (therefore, the pin is driven High on a fault condition).

PWM Output Fault (PWMFAULT)

Base 0x4002.8000
Offset 0x010
Type R/W, reset 0x0000.0000

	31	30	29	28	27	26	25	24	23	22	21	20	19	18	17	16
	reserved															
Type	RO	RO	RO	RO	RO	RO	RO	RO	RO	RO	RO	RO	RO	RO	RO	RO
Reset	0	0	0	0	0	0	0	0	0	0	0	0	0	0	0	0

	15	14	13	12	11	10	9	8	7	6	5	4	3	2	1	0
	reserved										Fault5	Fault4	Fault3	Fault2	Fault1	Fault0
Type	RO	RO	RO	RO	RO	RO	RO	RO	RO	RO	R/W	R/W	R/W	R/W	R/W	R/W
Reset	0	0	0	0	0	0	0	0	0	0	0	0	0	0	0	0

Bit/Field	Name	Type	Reset	Description
31:6	reserved	RO	0x00	Software should not rely on the value of a reserved bit. To provide compatibility with future products, the value of a reserved bit should be preserved across a read-modify-write operation.
5	Fault5	R/W	0	PWM5 Fault When set, the `PWM5` output signal is driven Low on a fault condition.
4	Fault4	R/W	0	PWM4 Fault When set, the `PWM4` output signal is driven Low on a fault condition.
3	Fault3	R/W	0	PWM3 Fault When set, the `PWM3` output signal is driven Low on a fault condition.
2	Fault2	R/W	0	PWM2 Fault When set, the `PWM2` output signal is driven Low on a fault condition.
1	Fault1	R/W	0	PWM1 Fault When set, the `PWM1` output signal is driven Low on a fault condition.
0	Fault0	R/W	0	PWM0 Fault When set, the `PWM0` output signal is driven Low on a fault condition.

Register 6: PWM Interrupt Enable (PWMINTEN), offset 0x014

This register controls the global interrupt generation capabilities of the PWM module. The events that can cause an interrupt are the fault input and the individual interrupts from the PWM generators.

PWM Interrupt Enable (PWMINTEN)

Base 0x4002.8000
Offset 0x014
Type R/W, reset 0x0000.0000

	31	30	29	28	27	26	25	24	23	22	21	20	19	18	17	16
	reserved															IntFault
Type	RO	RO	RO	RO	RO	RO	RO	RO	RO	RO	RO	RO	RO	RO	RO	R/W
Reset	0	0	0	0	0	0	0	0	0	0	0	0	0	0	0	0

	15	14	13	12	11	10	9	8	7	6	5	4	3	2	1	0
	reserved													IntPWM2	IntPWM1	IntPWM0
Type	RO	RO	RO	RO	RO	RO	RO	RO	RO	RO	RO	RO	RO	R/W	R/W	R/W
Reset	0	0	0	0	0	0	0	0	0	0	0	0	0	0	0	0

Bit/Field	Name	Type	Reset	Description
31:17	reserved	RO	0x00	Software should not rely on the value of a reserved bit. To provide compatibility with future products, the value of a reserved bit should be preserved across a read-modify-write operation.
16	IntFault	R/W	0	Fault Interrupt Enable When set, an interrupt occurs when the fault input is asserted.
15:3	reserved	RO	0x00	Software should not rely on the value of a reserved bit. To provide compatibility with future products, the value of a reserved bit should be preserved across a read-modify-write operation.
2	IntPWM2	R/W	0	PWM2 Interrupt Enable When set, an interrupt occurs when the PWM generator 2 block asserts an interrupt.
1	IntPWM1	R/W	0	PWM1 Interrupt Enable When set, an interrupt occurs when the PWM generator 1 block asserts an interrupt.
0	IntPWM0	R/W	0	PWM0 Interrupt Enable When set, an interrupt occurs when the PWM generator 0 block asserts an interrupt.

Register 7: PWM Raw Interrupt Status (PWMRIS), offset 0x018

This register provides the current set of interrupt sources that are asserted, regardless of whether they cause an interrupt to be asserted to the controller. The fault interrupt is latched on detection; it must be cleared through the **PWM Interrupt Status and Clear (PWMISC)** register (see page 553). The PWM generator interrupts simply reflect the status of the PWM generators; they are cleared via the interrupt status register in the PWM generator blocks. Bits set to 1 indicate the events that are active; zero bits indicate that the event in question is not active.

PWM Raw Interrupt Status (PWMRIS)

Base 0x4002.8000
Offset 0x018
Type RO, reset 0x0000.0000

	31	30	29	28	27	26	25	24	23	22	21	20	19	18	17	16
	reserved															IntFault
Type	RO	RO	RO	RO	RO	RO	RO	RO	RO	RO	RO	RO	RO	RO	RO	RO
Reset	0	0	0	0	0	0	0	0	0	0	0	0	0	0	0	0

	15	14	13	12	11	10	9	8	7	6	5	4	3	2	1	0
	reserved													IntPWM2	IntPWM1	IntPWM0
Type	RO	RO	RO	RO	RO	RO	RO	RO	RO	RO	RO	RO	RO	RO	RO	RO
Reset	0	0	0	0	0	0	0	0	0	0	0	0	0	0	0	0

Bit/Field	Name	Type	Reset	Description
31:17	reserved	RO	0x00	Software should not rely on the value of a reserved bit. To provide compatibility with future products, the value of a reserved bit should be preserved across a read-modify-write operation.
16	IntFault	RO	0	Fault Interrupt Asserted Indicates that the fault input is asserting.
15:3	reserved	RO	0x00	Software should not rely on the value of a reserved bit. To provide compatibility with future products, the value of a reserved bit should be preserved across a read-modify-write operation.
2	IntPWM2	RO	0	PWM2 Interrupt Asserted Indicates that the PWM generator 2 block is asserting its interrupt.
1	IntPWM1	RO	0	PWM1 Interrupt Asserted Indicates that the PWM generator 1 block is asserting its interrupt.
0	IntPWM0	RO	0	PWM0 Interrupt Asserted Indicates that the PWM generator 0 block is asserting its interrupt.

Register 8: PWM Interrupt Status and Clear (PWMISC), offset 0x01C

This register provides a summary of the interrupt status of the individual PWM generator blocks. A bit set to 1 indicates that the corresponding generator block is asserting an interrupt. The individual interrupt status registers in each block must be consulted to determine the reason for the interrupt, and used to clear the interrupt. For the fault interrupt, a write of 1 to that bit position clears the latched interrupt status.

PWM Interrupt Status and Clear (PWMISC)

Base 0x4002.8000
Offset 0x01C
Type R/W1C, reset 0x0000.0000

	31	30	29	28	27	26	25	24	23	22	21	20	19	18	17	16
	reserved															IntFault
Type	RO	RO	RO	RO	RO	RO	RO	RO	RO	RO	RO	RO	RO	RO	RO	R/W1C
Reset	0	0	0	0	0	0	0	0	0	0	0	0	0	0	0	0

	15	14	13	12	11	10	9	8	7	6	5	4	3	2	1	0
	reserved													IntPWM2	IntPWM1	IntPWM0
Type	RO	RO	RO	RO	RO	RO	RO	RO	RO	RO	RO	RO	RO	RO	RO	RO
Reset	0	0	0	0	0	0	0	0	0	0	0	0	0	0	0	0

Bit/Field	Name	Type	Reset	Description
31:17	reserved	RO	0x00	Software should not rely on the value of a reserved bit. To provide compatibility with future products, the value of a reserved bit should be preserved across a read-modify-write operation.
16	IntFault	R/W1C	0	Fault Interrupt Asserted Indicates that the fault input is asserting an interrupt.
15:3	reserved	RO	0x00	Software should not rely on the value of a reserved bit. To provide compatibility with future products, the value of a reserved bit should be preserved across a read-modify-write operation.
2	IntPWM2	RO	0	PWM2 Interrupt Status Indicates if the PWM generator 2 block is asserting an interrupt.
1	IntPWM1	RO	0	PWM1 Interrupt Status Indicates if the PWM generator 1 block is asserting an interrupt.
0	IntPWM0	RO	0	PWM0 Interrupt Status Indicates if the PWM generator 0 block is asserting an interrupt.

Register 9: PWM Status (PWMSTATUS), offset 0x020

This register provides the status of the FAULT input signal.

PWM Status (PWMSTATUS)

Base 0x4002.8000
Offset 0x020
Type RO, reset 0x0000.0000

	31	30	29	28	27	26	25	24	23	22	21	20	19	18	17	16
	reserved															
Type	RO	RO	RO	RO	RO	RO	RO	RO	RO	RO	RO	RO	RO	RO	RO	RO
Reset	0	0	0	0	0	0	0	0	0	0	0	0	0	0	0	0

	15	14	13	12	11	10	9	8	7	6	5	4	3	2	1	0
	reserved															Fault
Type	RO	RO	RO	RO	RO	RO	RO	RO	RO	RO	RO	RO	RO	RO	RO	RO
Reset	0	0	0	0	0	0	0	0	0	0	0	0	0	0	0	0

Bit/Field	Name	Type	Reset	Description
31:1	reserved	RO	0x00	Software should not rely on the value of a reserved bit. To provide compatibility with future products, the value of a reserved bit should be preserved across a read-modify-write operation.
0	Fault	RO	0	Fault Interrupt Status When set, indicates the fault input is asserted.

Register 10: PWM0 Control (PWM0CTL), offset 0x040

Register 11: PWM1 Control (PWM1CTL), offset 0x080

Register 12: PWM2 Control (PWM2CTL), offset 0x0C0

These registers configure the PWM signal generation blocks (PWM0CTL controls the PWM generator 0 block, and so on). The Register Update mode, Debug mode, Counting mode, and Block Enable mode are all controlled via these registers. The blocks produce the PWM signals, which can be either two independent PWM signals (from the same counter), or a paired set of PWM signals with dead-band delays added.

The PWM0 block produces the `PWM0` and `PWM1` outputs, the PWM1 block produces the `PWM2` and `PWM3` outputs, and the PWM2 block produces the `PWM4` and `PWM5` outputs.

PWM0 Control (PWM0CTL)

Base 0x4002.8000
Offset 0x040
Type R/W, reset 0x0000.0000

	31	30	29	28	27	26	25	24	23	22	21	20	19	18	17	16
	reserved															
Type	RO	RO	RO	RO	RO	RO	RO	RO	RO	RO	RO	RO	RO	RO	RO	RO
Reset	0	0	0	0	0	0	0	0	0	0	0	0	0	0	0	0

	15	14	13	12	11	10	9	8	7	6	5	4	3	2	1	0
	reserved										CmpBUpd	CmpAUpd	LoadUpd	Debug	Mode	Enable
Type	RO	RO	RO	RO	RO	RO	RO	RO	RO	RO	R/W	R/W	R/W	R/W	R/W	R/W
Reset	0	0	0	0	0	0	0	0	0	0	0	0	0	0	0	0

Bit/Field	Name	Type	Reset	Description
31:6	reserved	RO	0x00	Software should not rely on the value of a reserved bit. To provide compatibility with future products, the value of a reserved bit should be preserved across a read-modify-write operation.
5	CmpBUpd	R/W	0	Comparator B Update Mode Same as `CmpAUpd` but for the comparator B register.
4	CmpAUpd	R/W	0	Comparator A Update Mode The Update mode for the comparator A register. When not set, updates to the register are reflected to the comparator the next time the counter is 0. When set, updates to the register are delayed until the next time the counter is 0 after a synchronous update has been requested through the **PWM Master Control (PWMCTL)** register (see page 546).
3	LoadUpd	R/W	0	Load Register Update Mode The Update mode for the load register. When not set, updates to the register are reflected to the counter the next time the counter is 0. When set, updates to the register are delayed until the next time the counter is 0 after a synchronous update has been requested through the **PWM Master Control (PWMCTL)** register.
2	Debug	R/W	0	Debug Mode The behavior of the counter in Debug mode. When not set, the counter stops running when it next reaches 0, and continues running again when no longer in Debug mode. When set, the counter always runs.

Bit/Field	Name	Type	Reset	Description
1	Mode	R/W	0	Counter Mode The mode for the counter. When not set, the counter counts down from the load value to 0 and then wraps back to the load value (Count-Down mode). When set, the counter counts up from 0 to the load value, back down to 0, and then repeats (Count-Up/Down mode).
0	Enable	R/W	0	PWM Block Enable Master enable for the PWM generation block. When not set, the entire block is disabled and not clocked. When set, the block is enabled and produces PWM signals.

Register 13: PWM0 Interrupt and Trigger Enable (PWM0INTEN), offset 0x044

Register 14: PWM1 Interrupt and Trigger Enable (PWM1INTEN), offset 0x084

Register 15: PWM2 Interrupt and Trigger Enable (PWM2INTEN), offset 0x0C4

These registers control the interrupt and ADC trigger generation capabilities of the PWM generators (**PWM0INTEN** controls the PWM generator 0 block, and so on). The events that can cause an interrupt or an ADC trigger are:

- The counter being equal to the load register
- The counter being equal to zero
- The counter being equal to the comparator A register while counting up
- The counter being equal to the comparator A register while counting down
- The counter being equal to the comparator B register while counting up
- The counter being equal to the comparator B register while counting down

Any combination of these events can generate either an interrupt, or an ADC trigger; though no determination can be made as to the actual event that caused an ADC trigger if more than one is specified.

PWM0 Interrupt and Trigger Enable (PWM0INTEN)

Base 0x4002.8000
Offset 0x044
Type R/W, reset 0x0000.0000

	31	30	29	28	27	26	25	24	23	22	21	20	19	18	17	16
	reserved															
Type	RO	RO	RO	RO	RO	RO	RO	RO	RO	RO	RO	RO	RO	RO	RO	RO
Reset	0	0	0	0	0	0	0	0	0	0	0	0	0	0	0	0

	15	14	13	12	11	10	9	8	7	6	5	4	3	2	1	0
	reserved		TrCmpBD	TrCmpBU	TrCmpAD	TrCmpAU	TrCntLoad	TrCntZero	reserved		IntCmpBD	IntCmpBU	IntCmpAD	IntCmpAU	IntCntLoad	IntCntZero
Type	RO	RO	R/W	R/W	R/W	R/W	R/W	R/W	RO	RO	R/W	R/W	R/W	R/W	R/W	R/W
Reset	0	0	0	0	0	0	0	0	0	0	0	0	0	0	0	0

Bit/Field	Name	Type	Reset	Description
31:14	reserved	RO	0x00	Software should not rely on the value of a reserved bit. To provide compatibility with future products, the value of a reserved bit should be preserved across a read-modify-write operation.
13	TrCmpBD	R/W	0	Trigger for Counter=Comparator B Down When 1, a trigger pulse is output when the counter matches the comparator B value and the counter is counting down.
12	TrCmpBU	R/W	0	Trigger for Counter=Comparator B Up When 1, a trigger pulse is output when the counter matches the comparator B value and the counter is counting up.
11	TrCmpAD	R/W	0	Trigger for Counter=Comparator A Down When 1, a trigger pulse is output when the counter matches the comparator A value and the counter is counting down.

Bit/Field	Name	Type	Reset	Description
10	TrCmpAU	R/W	0	Trigger for Counter=Comparator A Up When 1, a trigger pulse is output when the counter matches the comparator A value and the counter is counting up.
9	TrCntLoad	R/W	0	Trigger for Counter=Load When 1, a trigger pulse is output when the counter matches the **PWMnLOAD** register.
8	TrCntZero	R/W	0	Trigger for Counter=0 When 1, a trigger pulse is output when the counter is 0.
7:6	reserved	RO	0x0	Software should not rely on the value of a reserved bit. To provide compatibility with future products, the value of a reserved bit should be preserved across a read-modify-write operation.
5	IntCmpBD	R/W	0	Interrupt for Counter=Comparator B Down When 1, an interrupt occurs when the counter matches the comparator B value and the counter is counting down.
4	IntCmpBU	R/W	0	Interrupt for Counter=Comparator B Up When 1, an interrupt occurs when the counter matches the comparator B value and the counter is counting up.
3	IntCmpAD	R/W	0	Interrupt for Counter=Comparator A Down When 1, an interrupt occurs when the counter matches the comparator A value and the counter is counting down.
2	IntCmpAU	R/W	0	Interrupt for Counter=Comparator A Up When 1, an interrupt occurs when the counter matches the comparator A value and the counter is counting up.
1	IntCntLoad	R/W	0	Interrupt for Counter=Load When 1, an interrupt occurs when the counter matches the **PWMnLOAD** register.
0	IntCntZero	R/W	0	Interrupt for Counter=0 When 1, an interrupt occurs when the counter is 0.

Register 16: PWM0 Raw Interrupt Status (PWM0RIS), offset 0x048

Register 17: PWM1 Raw Interrupt Status (PWM1RIS), offset 0x088

Register 18: PWM2 Raw Interrupt Status (PWM2RIS), offset 0x0C8

These registers provide the current set of interrupt sources that are asserted, regardless of whether they cause an interrupt to be asserted to the controller (**PWM0RIS** controls the PWM generator 0 block, and so on). Bits set to 1 indicate the latched events that have occurred; bits set to 0 indicate that the event in question has not occurred.

PWM0 Raw Interrupt Status (PWM0RIS)

Base 0x4002.8000
Offset 0x048
Type RO, reset 0x0000.0000

	31	30	29	28	27	26	25	24	23	22	21	20	19	18	17	16
	reserved															
Type	RO	RO	RO	RO	RO	RO	RO	RO	RO	RO	RO	RO	RO	RO	RO	RO
Reset	0	0	0	0	0	0	0	0	0	0	0	0	0	0	0	0

	15	14	13	12	11	10	9	8	7	6	5	4	3	2	1	0
	reserved										IntCmpBD	IntCmpBU	IntCmpAD	IntCmpAU	IntCntLoad	IntCntZero
Type	RO	RO	RO	RO	RO	RO	RO	RO	RO	RO	RO	RO	RO	RO	RO	RO
Reset	0	0	0	0	0	0	0	0	0	0	0	0	0	0	0	0

Bit/Field	Name	Type	Reset	Description
31:6	reserved	RO	0x00	Software should not rely on the value of a reserved bit. To provide compatibility with future products, the value of a reserved bit should be preserved across a read-modify-write operation.
5	IntCmpBD	RO	0	Comparator B Down Interrupt Status Indicates that the counter has matched the comparator B value while counting down.
4	IntCmpBU	RO	0	Comparator B Up Interrupt Status Indicates that the counter has matched the comparator B value while counting up.
3	IntCmpAD	RO	0	Comparator A Down Interrupt Status Indicates that the counter has matched the comparator A value while counting down.
2	IntCmpAU	RO	0	Comparator A Up Interrupt Status Indicates that the counter has matched the comparator A value while counting up.
1	IntCntLoad	RO	0	Counter=Load Interrupt Status Indicates that the counter has matched the **PWMnLOAD** register.
0	IntCntZero	RO	0	Counter=0 Interrupt Status Indicates that the counter has matched 0.

Register 19: PWM0 Interrupt Status and Clear (PWM0ISC), offset 0x04C

Register 20: PWM1 Interrupt Status and Clear (PWM1ISC), offset 0x08C

Register 21: PWM2 Interrupt Status and Clear (PWM2ISC), offset 0x0CC

These registers provide the current set of interrupt sources that are asserted to the controller (**PWM0ISC** controls the PWM generator 0 block, and so on). Bits set to 1 indicate the latched events that have occurred; bits set to 0 indicate that the event in question has not occurred. These are R/W1C registers; writing a 1 to a bit position clears the corresponding interrupt reason.

PWM0 Interrupt Status and Clear (PWM0ISC)

Base 0x4002.8000
Offset 0x04C
Type R/W1C, reset 0x0000.0000

	31	30	29	28	27	26	25	24	23	22	21	20	19	18	17	16
	reserved															
Type	RO	RO	RO	RO	RO	RO	RO	RO	RO	RO	RO	RO	RO	RO	RO	RO
Reset	0	0	0	0	0	0	0	0	0	0	0	0	0	0	0	0

	15	14	13	12	11	10	9	8	7	6	5	4	3	2	1	0
	reserved										IntCmpBD	IntCmpBU	IntCmpAD	IntCmpAU	IntCntLoad	IntCntZero
Type	RO	RO	RO	RO	RO	RO	RO	RO	RO	RO	R/W1C	R/W1C	R/W1C	R/W1C	R/W1C	R/W1C
Reset	0	0	0	0	0	0	0	0	0	0	0	0	0	0	0	0

Bit/Field	Name	Type	Reset	Description
31:6	reserved	RO	0x00	Software should not rely on the value of a reserved bit. To provide compatibility with future products, the value of a reserved bit should be preserved across a read-modify-write operation.
5	IntCmpBD	R/W1C	0	Comparator B Down Interrupt Indicates that the counter has matched the comparator B value while counting down.
4	IntCmpBU	R/W1C	0	Comparator B Up Interrupt Indicates that the counter has matched the comparator B value while counting up.
3	IntCmpAD	R/W1C	0	Comparator A Down Interrupt Indicates that the counter has matched the comparator A value while counting down.
2	IntCmpAU	R/W1C	0	Comparator A Up Interrupt Indicates that the counter has matched the comparator A value while counting up.
1	IntCntLoad	R/W1C	0	Counter=Load Interrupt Indicates that the counter has matched the **PWMnLOAD** register.
0	IntCntZero	R/W1C	0	Counter=0 Interrupt Indicates that the counter has matched 0.

Register 22: PWM0 Load (PWM0LOAD), offset 0x050

Register 23: PWM1 Load (PWM1LOAD), offset 0x090

Register 24: PWM2 Load (PWM2LOAD), offset 0x0D0

These registers contain the load value for the PWM counter (**PWM0LOAD** controls the PWM generator 0 block, and so on). Based on the counter mode, either this value is loaded into the counter after it reaches zero, or it is the limit of up-counting after which the counter decrements back to zero.

If the Load Value Update mode is immediate, this value is used the next time the counter reaches zero; if the mode is synchronous, it is used the next time the counter reaches zero after a synchronous update has been requested through the **PWM Master Control (PWMCTL)** register (see page 546). If this register is re-written before the actual update occurs, the previous value is never used and is lost.

PWM0 Load (PWM0LOAD)

Base 0x4002.8000
Offset 0x050
Type R/W, reset 0x0000.0000

	31	30	29	28	27	26	25	24	23	22	21	20	19	18	17	16
	reserved															
Type	RO	RO	RO	RO	RO	RO	RO	RO	RO	RO	RO	RO	RO	RO	RO	RO
Reset	0	0	0	0	0	0	0	0	0	0	0	0	0	0	0	0

	15	14	13	12	11	10	9	8	7	6	5	4	3	2	1	0
	Load															
Type	R/W	R/W	R/W	R/W	R/W	R/W	R/W	R/W	R/W	R/W	R/W	R/W	R/W	R/W	R/W	R/W
Reset	0	0	0	0	0	0	0	0	0	0	0	0	0	0	0	0

Bit/Field	Name	Type	Reset	Description
31:16	reserved	RO	0x00	Software should not rely on the value of a reserved bit. To provide compatibility with future products, the value of a reserved bit should be preserved across a read-modify-write operation.
15:0	Load	R/W	0	Counter Load Value The counter load value.

Register 25: PWM0 Counter (PWM0COUNT), offset 0x054

Register 26: PWM1 Counter (PWM1COUNT), offset 0x094

Register 27: PWM2 Counter (PWM2COUNT), offset 0x0D4

These registers contain the current value of the PWM counter (**PWM0COUNT** is the value of the PWM generator 0 block, and so on). When this value matches the load register, a pulse is output; this can drive the generation of a PWM signal (via the **PWMnGENA/PWMnGENB** registers, see page 565 and page 568) or drive an interrupt or ADC trigger (via the **PWMnINTEN** register, see page 557). A pulse with the same capabilities is generated when this value is zero.

PWM0 Counter (PWM0COUNT)

Base 0x4002.8000
Offset 0x054
Type RO, reset 0x0000.0000

	31	30	29	28	27	26	25	24	23	22	21	20	19	18	17	16
	reserved															
Type	RO	RO	RO	RO	RO	RO	RO	RO	RO	RO	RO	RO	RO	RO	RO	RO
Reset	0	0	0	0	0	0	0	0	0	0	0	0	0	0	0	0

	15	14	13	12	11	10	9	8	7	6	5	4	3	2	1	0
	Count															
Type	RO	RO	RO	RO	RO	RO	RO	RO	RO	RO	RO	RO	RO	RO	RO	RO
Reset	0	0	0	0	0	0	0	0	0	0	0	0	0	0	0	0

Bit/Field	Name	Type	Reset	Description
31:16	reserved	RO	0x00	Software should not rely on the value of a reserved bit. To provide compatibility with future products, the value of a reserved bit should be preserved across a read-modify-write operation.
15:0	Count	RO	0x00	Counter Value The current value of the counter.

Register 28: PWM0 Compare A (PWM0CMPA), offset 0x058

Register 29: PWM1 Compare A (PWM1CMPA), offset 0x098

Register 30: PWM2 Compare A (PWM2CMPA), offset 0x0D8

These registers contain a value to be compared against the counter (**PWM0CMPA** controls the PWM generator 0 block, and so on). When this value matches the counter, a pulse is output; this can drive the generation of a PWM signal (via the **PWMnGENA/PWMnGENB** registers) or drive an interrupt or ADC trigger (via the **PWMnINTEN** register). If the value of this register is greater than the **PWMnLOAD** register (see page 561), then no pulse is ever output.

If the comparator A update mode is immediate (based on the `CmpAUpd` bit in the **PWMnCTL** register), this 16-bit `CompA` value is used the next time the counter reaches zero. If the update mode is synchronous, it is used the next time the counter reaches zero after a synchronous update has been requested through the **PWM Master Control (PWMCTL)** register (see page 546). If this register is rewritten before the actual update occurs, the previous value is never used and is lost.

PWM0 Compare A (PWM0CMPA)

Base 0x4002.8000
Offset 0x058
Type R/W, reset 0x0000.0000

	31	30	29	28	27	26	25	24	23	22	21	20	19	18	17	16
	reserved															
Type	RO	RO	RO	RO	RO	RO	RO	RO	RO	RO	RO	RO	RO	RO	RO	RO
Reset	0	0	0	0	0	0	0	0	0	0	0	0	0	0	0	0

	15	14	13	12	11	10	9	8	7	6	5	4	3	2	1	0
	CompA															
Type	R/W	R/W	R/W	R/W	R/W	R/W	R/W	R/W	R/W	R/W	R/W	R/W	R/W	R/W	R/W	R/W
Reset	0	0	0	0	0	0	0	0	0	0	0	0	0	0	0	0

Bit/Field	Name	Type	Reset	Description
31:16	reserved	RO	0x00	Software should not rely on the value of a reserved bit. To provide compatibility with future products, the value of a reserved bit should be preserved across a read-modify-write operation.
15:0	CompA	R/W	0x00	Comparator A Value The value to be compared against the counter.

Register 31: PWM0 Compare B (PWM0CMPB), offset 0x05C

Register 32: PWM1 Compare B (PWM1CMPB), offset 0x09C

Register 33: PWM2 Compare B (PWM2CMPB), offset 0x0DC

These registers contain a value to be compared against the counter (**PWM0CMPB** controls the PWM generator 0 block, and so on). When this value matches the counter, a pulse is output; this can drive the generation of a PWM signal (via the **PWMnGENA/PWMnGENB** registers) or drive an interrupt or ADC trigger (via the **PWMnINTEN** register). If the value of this register is greater than the **PWMnLOAD** register, no pulse is ever output.

If the comparator B update mode is immediate (based on the `CmpBUpd` bit in the **PWMnCTL** register), this 16-bit `CompB` value is used the next time the counter reaches zero. If the update mode is synchronous, it is used the next time the counter reaches zero after a synchronous update has been requested through the **PWM Master Control (PWMCTL)** register (see page 546). If this register is rewritten before the actual update occurs, the previous value is never used and is lost.

PWM0 Compare B (PWM0CMPB)

Base 0x4002.8000
Offset 0x05C
Type R/W, reset 0x0000.0000

	31	30	29	28	27	26	25	24	23	22	21	20	19	18	17	16
	reserved															
Type	RO	RO	RO	RO	RO	RO	RO	RO	RO	RO	RO	RO	RO	RO	RO	RO
Reset	0	0	0	0	0	0	0	0	0	0	0	0	0	0	0	0

	15	14	13	12	11	10	9	8	7	6	5	4	3	2	1	0
	CompB															
Type	R/W	R/W	R/W	R/W	R/W	R/W	R/W	R/W	R/W	R/W	R/W	R/W	R/W	R/W	R/W	R/W
Reset	0	0	0	0	0	0	0	0	0	0	0	0	0	0	0	0

Bit/Field	Name	Type	Reset	Description
31:16	reserved	RO	0x00	Software should not rely on the value of a reserved bit. To provide compatibility with future products, the value of a reserved bit should be preserved across a read-modify-write operation.
15:0	CompB	R/W	0x00	Comparator B Value The value to be compared against the counter.

Register 34: PWM0 Generator A Control (PWM0GENA), offset 0x060

Register 35: PWM1 Generator A Control (PWM1GENA), offset 0x0A0

Register 36: PWM2 Generator A Control (PWM2GENA), offset 0x0E0

These registers control the generation of the `PWMnA` signal based on the load and zero output pulses from the counter, as well as the compare A and compare B pulses from the comparators (**PWM0GENA** controls the PWM generator 0 block, and so on). When the counter is running in Count-Down mode, only four of these events occur; when running in Count-Up/Down mode, all six occur. These events provide great flexibility in the positioning and duty cycle of the PWM signal that is produced.

The **PWM0GENA** register controls generation of the `PWM0A` signal; **PWM1GENA**, the `PWM1A` signal; and **PWM2GENA**, the `PWM2A` signal.

If a zero or load event coincides with a compare A or compare B event, the zero or load action is taken and the compare A or compare B action is ignored. If a compare A event coincides with a compare B event, the compare A action is taken and the compare B action is ignored.

PWM0 Generator A Control (PWM0GENA)

Base 0x4002.8000
Offset 0x060
Type R/W, reset 0x0000.0000

	31	30	29	28	27	26	25	24	23	22	21	20	19	18	17	16
	reserved															
Type	RO	RO	RO	RO	RO	RO	RO	RO	RO	RO	RO	RO	RO	RO	RO	RO
Reset	0	0	0	0	0	0	0	0	0	0	0	0	0	0	0	0

	15	14	13	12	11	10	9	8	7	6	5	4	3	2	1	0
	reserved				ActCmpBD		ActCmpBU		ActCmpAD		ActCmpAU		ActLoad		ActZero	
Type	RO	RO	RO	RO	R/W	R/W	R/W	R/W	R/W	R/W	R/W	R/W	R/W	R/W	R/W	R/W
Reset	0	0	0	0	0	0	0	0	0	0	0	0	0	0	0	0

Bit/Field	Name	Type	Reset	Description
31:12	reserved	RO	0x00	Software should not rely on the value of a reserved bit. To provide compatibility with future products, the value of a reserved bit should be preserved across a read-modify-write operation.
11:10	ActCmpBD	R/W	0x0	Action for Comparator B Down The action to be taken when the counter matches comparator B while counting down. The table below defines the effect of the event on the output signal. Value Description 0x0 Do nothing. 0x1 Invert the output signal. 0x2 Set the output signal to 0. 0x3 Set the output signal to 1.

Bit/Field	Name	Type	Reset	Description
9:8	ActCmpBU	R/W	0x0	Action for Comparator B Up The action to be taken when the counter matches comparator B while counting up. Occurs only when the `Mode` bit in the **PWMnCTL** register (see page 555) is set to 1. The table below defines the effect of the event on the output signal. Value Description 0x0 Do nothing. 0x1 Invert the output signal. 0x2 Set the output signal to 0. 0x3 Set the output signal to 1.
7:6	ActCmpAD	R/W	0x0	Action for Comparator A Down The action to be taken when the counter matches comparator A while counting down. The table below defines the effect of the event on the output signal. Value Description 0x0 Do nothing. 0x1 Invert the output signal. 0x2 Set the output signal to 0. 0x3 Set the output signal to 1.
5:4	ActCmpAU	R/W	0x0	Action for Comparator A Up The action to be taken when the counter matches comparator A while counting up. Occurs only when the `Mode` bit in the **PWMnCTL** register is set to 1. The table below defines the effect of the event on the output signal. Value Description 0x0 Do nothing. 0x1 Invert the output signal. 0x2 Set the output signal to 0. 0x3 Set the output signal to 1.
3:2	ActLoad	R/W	0x0	Action for Counter=Load The action to be taken when the counter matches the load value. The table below defines the effect of the event on the output signal. Value Description 0x0 Do nothing. 0x1 Invert the output signal. 0x2 Set the output signal to 0. 0x3 Set the output signal to 1.

Bit/Field	Name	Type	Reset	Description
1:0	ActZero	R/W	0x0	Action for Counter=0 The action to be taken when the counter is zero. The table below defines the effect of the event on the output signal. Value Description 0x0 Do nothing. 0x1 Invert the output signal. 0x2 Set the output signal to 0. 0x3 Set the output signal to 1.

Register 37: PWM0 Generator B Control (PWM0GENB), offset 0x064

Register 38: PWM1 Generator B Control (PWM1GENB), offset 0x0A4

Register 39: PWM2 Generator B Control (PWM2GENB), offset 0x0E4

These registers control the generation of the `PWMnB` signal based on the load and zero output pulses from the counter, as well as the compare A and compare B pulses from the comparators (**PWM0GENB** controls the PWM generator 0 block, and so on). When the counter is running in Down mode, only four of these events occur; when running in Up/Down mode, all six occur. These events provide great flexibility in the positioning and duty cycle of the PWM signal that is produced.

The **PWM0GENB** register controls generation of the `PWM0B` signal; **PWM1GENB**, the `PWM1B` signal; and **PWM2GENB**, the `PWM2B` signal.

If a zero or load event coincides with a compare A or compare B event, the zero or load action is taken and the compare A or compare B action is ignored. If a compare A event coincides with a compare B event, the compare B action is taken and the compare A action is ignored.

PWM0 Generator B Control (PWM0GENB)

Base 0x4002.8000
Offset 0x064
Type R/W, reset 0x0000.0000

	31	30	29	28	27	26	25	24	23	22	21	20	19	18	17	16
	reserved															
Type	RO	RO	RO	RO	RO	RO	RO	RO	RO	RO	RO	RO	RO	RO	RO	RO
Reset	0	0	0	0	0	0	0	0	0	0	0	0	0	0	0	0

	15	14	13	12	11	10	9	8	7	6	5	4	3	2	1	0
	reserved				ActCmpBD		ActCmpBU		ActCmpAD		ActCmpAU		ActLoad		ActZero	
Type	RO	RO	RO	RO	R/W	R/W	R/W	R/W	R/W	R/W	R/W	R/W	R/W	R/W	R/W	R/W
Reset	0	0	0	0	0	0	0	0	0	0	0	0	0	0	0	0

Bit/Field	Name	Type	Reset	Description
31:12	reserved	RO	0x00	Software should not rely on the value of a reserved bit. To provide compatibility with future products, the value of a reserved bit should be preserved across a read-modify-write operation.
11:10	ActCmpBD	R/W	0x0	Action for Comparator B Down The action to be taken when the counter matches comparator B while counting down. The table below defines the effect of the event on the output signal.

Value	Description
0x0	Do nothing.
0x1	Invert the output signal.
0x2	Set the output signal to 0.
0x3	Set the output signal to 1.

Bit/Field	Name	Type	Reset	Description
9:8	ActCmpBU	R/W	0x0	Action for Comparator B Up The action to be taken when the counter matches comparator B while counting up. Occurs only when the `Mode` bit in the **PWMnCTL** register is set to 1. The table below defines the effect of the event on the output signal. Value Description 0x0 Do nothing. 0x1 Invert the output signal. 0x2 Set the output signal to 0. 0x3 Set the output signal to 1.
7:6	ActCmpAD	R/W	0x0	Action for Comparator A Down The action to be taken when the counter matches comparator A while counting down. The table below defines the effect of the event on the output signal. Value Description 0x0 Do nothing. 0x1 Invert the output signal. 0x2 Set the output signal to 0. 0x3 Set the output signal to 1.
5:4	ActCmpAU	R/W	0x0	Action for Comparator A Up The action to be taken when the counter matches comparator A while counting up. Occurs only when the `Mode` bit in the **PWMnCTL** register is set to 1. The table below defines the effect of the event on the output signal. Value Description 0x0 Do nothing. 0x1 Invert the output signal. 0x2 Set the output signal to 0. 0x3 Set the output signal to 1.
3:2	ActLoad	R/W	0x0	Action for Counter=Load The action to be taken when the counter matches the load value. The table below defines the effect of the event on the output signal. Value Description 0x0 Do nothing. 0x1 Invert the output signal. 0x2 Set the output signal to 0. 0x3 Set the output signal to 1.

Bit/Field	Name	Type	Reset	Description
1:0	ActZero	R/W	0x0	Action for Counter=0 The action to be taken when the counter is 0. The table below defines the effect of the event on the output signal. Value Description 0x0 Do nothing. 0x1 Invert the output signal. 0x2 Set the output signal to 0. 0x3 Set the output signal to 1.

Register 40: PWM0 Dead-Band Control (PWM0DBCTL), offset 0x068

Register 41: PWM1 Dead-Band Control (PWM1DBCTL), offset 0x0A8

Register 42: PWM2 Dead-Band Control (PWM2DBCTL), offset 0x0E8

The **PWM0DBCTL** register controls the dead-band generator, which produces the `PWM0` and `PWM1` signals based on the `PWM0A` and `PWM0B` signals. When disabled, the `PWM0A` signal passes through to the `PWM0` signal and the `PWM0B` signal passes through to the `PWM1` signal. When enabled and inverting the resulting waveform, the `PWM0B` signal is ignored; the `PWM0` signal is generated by delaying the rising edge(s) of the `PWM0A` signal by the value in the **PWM0DBRISE** register (see page 572), and the `PWM1` signal is generated by delaying the falling edge(s) of the `PWM0A` signal by the value in the **PWM0DBFALL** register (see page 573). In a similar manner, `PWM2` and `PWM3` are produced from the `PWM1A` and `PWM1B` signals, and `PWM4` and `PWM5` are produced from the `PWM2A` and `PWM2B` signals.

PWM0 Dead-Band Control (PWM0DBCTL)

Base 0x4002.8000
Offset 0x068
Type R/W, reset 0x0000.0000

	31	30	29	28	27	26	25	24	23	22	21	20	19	18	17	16
	reserved															
Type	RO	RO	RO	RO	RO	RO	RO	RO	RO	RO	RO	RO	RO	RO	RO	RO
Reset	0	0	0	0	0	0	0	0	0	0	0	0	0	0	0	0

	15	14	13	12	11	10	9	8	7	6	5	4	3	2	1	0
	reserved															Enable
Type	RO	RO	RO	RO	RO	RO	RO	RO	RO	RO	RO	RO	RO	RO	RO	R/W
Reset	0	0	0	0	0	0	0	0	0	0	0	0	0	0	0	0

Bit/Field	Name	Type	Reset	Description
31:1	reserved	RO	0x00	Software should not rely on the value of a reserved bit. To provide compatibility with future products, the value of a reserved bit should be preserved across a read-modify-write operation.
0	Enable	R/W	0	Dead-Band Generator Enable When set, the dead-band generator inserts dead bands into the output signals; when clear, it simply passes the PWM signals through.

Register 43: PWM0 Dead-Band Rising-Edge Delay (PWM0DBRISE), offset 0x06C

Register 44: PWM1 Dead-Band Rising-Edge Delay (PWM1DBRISE), offset 0x0AC

Register 45: PWM2 Dead-Band Rising-Edge Delay (PWM2DBRISE), offset 0x0EC

The **PWM0DBRISE** register contains the number of clock ticks to delay the rising edge of the `PWM0A` signal when generating the `PWM0` signal. If the dead-band generator is disabled through the **PWMnDBCTL** register, the **PWM0DBRISE** register is ignored. If the value of this register is larger than the width of a High pulse on the input PWM signal, the rising-edge delay consumes the entire High time of the signal, resulting in no High time on the output. Care must be taken to ensure that the input High time always exceeds the rising-edge delay. In a similar manner, `PWM2` is generated from `PWM1A` with its rising edge delayed and `PWM4` is produced from `PWM2A` with its rising edge delayed.

PWM0 Dead-Band Rising-Edge Delay (PWM0DBRISE)

Base 0x4002.8000
Offset 0x06C
Type R/W, reset 0x0000.0000

	31	30	29	28	27	26	25	24	23	22	21	20	19	18	17	16
	reserved															
Type	RO	RO	RO	RO	RO	RO	RO	RO	RO	RO	RO	RO	RO	RO	RO	RO
Reset	0	0	0	0	0	0	0	0	0	0	0	0	0	0	0	0

	15	14	13	12	11	10	9	8	7	6	5	4	3	2	1	0
	reserved				RiseDelay											
Type	RO	RO	RO	RO	R/W	R/W	R/W	R/W	R/W	R/W	R/W	R/W	R/W	R/W	R/W	R/W
Reset	0	0	0	0	0	0	0	0	0	0	0	0	0	0	0	0

Bit/Field	Name	Type	Reset	Description
31:12	reserved	RO	0x00	Software should not rely on the value of a reserved bit. To provide compatibility with future products, the value of a reserved bit should be preserved across a read-modify-write operation.
11:0	RiseDelay	R/W	0	Dead-Band Rise Delay The number of clock ticks to delay the rising edge.

Register 46: PWM0 Dead-Band Falling-Edge-Delay (PWM0DBFALL), offset 0x070

Register 47: PWM1 Dead-Band Falling-Edge-Delay (PWM1DBFALL), offset 0x0B0

Register 48: PWM2 Dead-Band Falling-Edge-Delay (PWM2DBFALL), offset 0x0F0

The **PWM0DBFALL** register contains the number of clock ticks to delay the falling edge of the `PWM0A` signal when generating the `PWM1` signal. If the dead-band generator is disabled, this register is ignored. If the value of this register is larger than the width of a Low pulse on the input PWM signal, the falling-edge delay consumes the entire Low time of the signal, resulting in no Low time on the output. Care must be taken to ensure that the input Low time always exceeds the falling-edge delay. In a similar manner, `PWM3` is generated from `PWM1A` with its falling edge delayed and `PWM5` is produced from `PWM2A` with its falling edge delayed.

PWM0 Dead-Band Falling-Edge-Delay (PWM0DBFALL)

Base 0x4002.8000
Offset 0x070
Type R/W, reset 0x0000.0000

	31	30	29	28	27	26	25	24	23	22	21	20	19	18	17	16
	reserved															
Type	RO	RO	RO	RO	RO	RO	RO	RO	RO	RO	RO	RO	RO	RO	RO	RO
Reset	0	0	0	0	0	0	0	0	0	0	0	0	0	0	0	0

	15	14	13	12	11	10	9	8	7	6	5	4	3	2	1	0
	reserved				FallDelay											
Type	RO	RO	RO	RO	R/W	R/W	R/W	R/W	R/W	R/W	R/W	R/W	R/W	R/W	R/W	R/W
Reset	0	0	0	0	0	0	0	0	0	0	0	0	0	0	0	0

Bit/Field	Name	Type	Reset	Description
31:12	reserved	RO	0x00	Software should not rely on the value of a reserved bit. To provide compatibility with future products, the value of a reserved bit should be preserved across a read-modify-write operation.
11:0	FallDelay	R/W	0x00	Dead-Band Fall Delay The number of clock ticks to delay the falling edge.

20 Quadrature Encoder Interface (QEI)

A quadrature encoder, also known as a 2-channel incremental encoder, converts linear displacement into a pulse signal. By monitoring both the number of pulses and the relative phase of the two signals, you can track the position, direction of rotation, and speed. In addition, a third channel, or index signal, can be used to reset the position counter.

The LM3S8962 microcontroller includes two quadrature encoder interface (QEI) modules. Each QEI module interprets the code produced by a quadrature encoder wheel to integrate position over time and determine direction of rotation. In addition, it can capture a running estimate of the velocity of the encoder wheel.

Each Stellaris® quadrature encoder has the following features:

- Two QEI modules, each with the following features:
- Position integrator that tracks the encoder position
- Velocity capture using built-in timer
- The input frequency of the QEI inputs may be as high as 1/4 of the processor frequency (for example, 12.5 MHz for a 50-MHz system)
- Interrupt generation on:
  - Index pulse
  - Velocity-timer expiration
  - Direction change
  - Quadrature error detection

20.1 Block Diagram

Figure 20-1 on page 575 provides a block diagram of a Stellaris® QEI module.

Figure 20-1. QEI Block Diagram

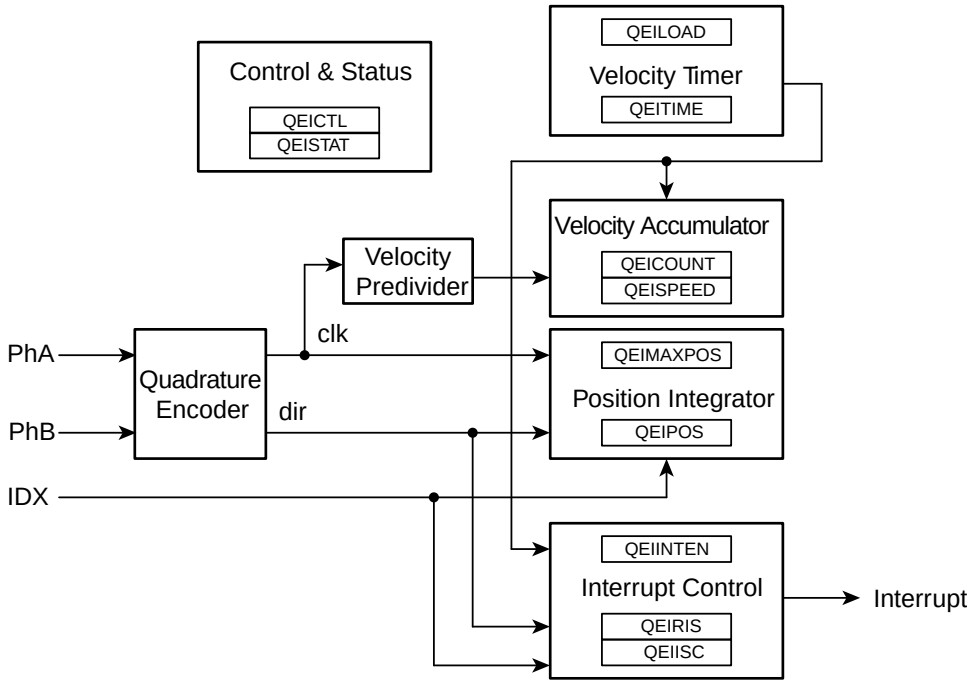

20.2 Functional Description

The QEI module interprets the two-bit gray code produced by a quadrature encoder wheel to integrate position over time and determine direction of rotation. In addition, it can capture a running estimate of the velocity of the encoder wheel.

The position integrator and velocity capture can be independently enabled, though the position integrator must be enabled before the velocity capture can be enabled. The two phase signals, `PhA` and `PhB`, can be swapped before being interpreted by the QEI module to change the meaning of forward and backward, and to correct for miswiring of the system. Alternatively, the phase signals can be interpreted as a clock and direction signal as output by some encoders.

The QEI module supports two modes of signal operation: quadrature phase mode and clock/direction mode. In quadrature phase mode, the encoder produces two clocks that are 90 degrees out of phase; the edge relationship is used to determine the direction of rotation. In clock/direction mode, the encoder produces a clock signal to indicate steps and a direction signal to indicate the direction of rotation. This mode is determined by the `SigMode` bit of the **QEI Control (QEICTL)** register (see page 579).

When the QEI module is set to use the quadrature phase mode (`SigMode` bit equals zero), the capture mode for the position integrator can be set to update the position counter on every edge of the `PhA` signal or to update on every edge of both `PhA` and `PhB`. Updating the position counter on every `PhA` and `PhB` provides more positional resolution at the cost of less range in the positional counter.

When edges on `PhA` lead edges on `PhB` , the position counter is incremented. When edges on `PhB` lead edges on `PhA` , the position counter is decremented. When a rising and falling edge pair is seen on one of the phases without any edges on the other, the direction of rotation has changed.

The positional counter is automatically reset on one of two conditions: sensing the index pulse or reaching the maximum position value. Which mode is determined by the `ResMode` bit of the **QEI Control (QEICTL)** register.

When `ResMode` is 0, the positional counter is reset when the index pulse is sensed. This limits the positional counter to the values [0:N-1], where N is the number of phase edges in a full revolution of the encoder wheel. The **QEIMAXPOS** register must be programmed with N-1 so that the reverse direction from position 0 can move the position counter to N-1. In this mode, the position register contains the absolute position of the encoder relative to the index (or home) position once an index pulse has been seen.

When `ResMode` is 1, the positional counter is constrained to the range [0:M], where M is the programmable maximum value. The index pulse is ignored by the positional counter in this mode.

The velocity capture has a configurable timer and a count register. It counts the number of phase edges (using the same configuration as for the position integrator) in a given time period. The edge count from the previous time period is available to the controller via the **QEISPEED** register, while the edge count for the current time period is being accumulated in the **QEICOUNT** register. As soon as the current time period is complete, the total number of edges counted in that time period is made available in the **QEISPEED** register (losing the previous value), the **QEICOUNT** is reset to 0, and counting commences on a new time period. The number of edges counted in a given time period is directly proportional to the velocity of the encoder.

Figure 20-2 on page 576 shows how the Stellaris® quadrature encoder converts the phase input signals into clock pulses, the direction signal, and how the velocity predivider operates (in Divide by 4 mode).

Figure 20-2. Quadrature Encoder and Velocity Predivider Operation

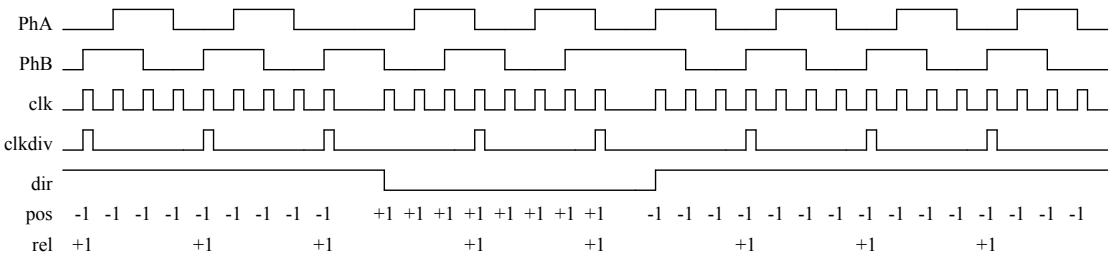

The period of the timer is configurable by specifying the load value for the timer in the **QEILOAD** register. When the timer reaches zero, an interrupt can be triggered, and the hardware reloads the timer with the **QEILOAD** value and continues to count down. At lower encoder speeds, a longer timer period is needed to be able to capture enough edges to have a meaningful result. At higher encoder speeds, both a shorter timer period and/or the velocity predivider can be used.

The following equation converts the velocity counter value into an rpm value:

```
rpm = (clock * (2 ^ VelDiv) * Speed * 60) ÷ (Load * ppr * edges)
```

where:

`clock` is the controller clock rate

`ppr` is the number of pulses per revolution of the physical encoder

`edges` is 2 or 4, based on the capture mode set in the **QEICTL** register (2 for `CapMode` set to 0 and 4 for `CapMode` set to 1)

For example, consider a motor running at 600 rpm. A 2048 pulse per revolution quadrature encoder is attached to the motor, producing 8192 phase edges per revolution. With a velocity predivider of ÷1 (`VelDiv` set to 0) and clocking on both `PhA` and `PhB` edges, this results in 81,920 pulses per second (the motor turns 10 times per second). If the timer were clocked at 10,000 Hz, and the load value was 2,500 (¼ of a second), it would count 20,480 pulses per update. Using the above equation:

```
rpm = (10000 * 1 * 20480 * 60) ÷ (2500 * 2048 * 4) = 600 rpm
```

Now, consider that the motor is sped up to 3000 rpm. This results in 409,600 pulses per second, or 102,400 every ¼ of a second. Again, the above equation gives:

```
rpm = (10000 * 1 * 102400 * 60) ÷ (2500 * 2048 * 4) = 3000 rpm
```

Care must be taken when evaluating this equation since intermediate values may exceed the capacity of a 32-bit integer. In the above examples, the clock is 10,000 and the divider is 2,500; both could be predivided by 100 (at compile time if they are constants) and therefore be 100 and 25. In fact, if they were compile-time constants, they could also be reduced to a simple multiply by 4, cancelled by the ÷4 for the edge-count factor.

Important: Reducing constant factors at compile time is the best way to control the intermediate values of this equation, as well as reducing the processing requirement of computing this equation.

The division can be avoided by selecting a timer load value such that the divisor is a power of 2; a simple shift can therefore be done in place of the division. For encoders with a power of 2 pulses per revolution, this is a simple matter of selecting a power of 2 load value. For other encoders, a load value must be selected such that the product is very close to a power of two. For example, a 100 pulse per revolution encoder could use a load value of 82, resulting in 32,800 as the divisor, which is 0.09% above 2^{14}; in this case a shift by 15 would be an adequate approximation of the divide in most cases. If absolute accuracy were required, the controller's divide instruction could be used.

The QEI module can produce a controller interrupt on several events: phase error, direction change, reception of the index pulse, and expiration of the velocity timer. Standard masking, raw interrupt status, interrupt status, and interrupt clear capabilities are provided.

20.3 Initialization and Configuration

The following example shows how to configure the Quadrature Encoder module to read back an absolute position:

1. Enable the QEI clock by writing a value of 0x0000.0100 to the **RCGC1** register in the System Control module.
2. Enable the clock to the appropriate GPIO module via the **RCGC2** register in the System Control module.
3. In the GPIO module, enable the appropriate pins for their alternate function using the **GPIOAFSEL** register.
4. Configure the quadrature encoder to capture edges on both signals and maintain an absolute position by resetting on index pulses. Using a 1000-line encoder at four edges per line, there are 4000 pulses per revolution; therefore, set the maximum position to 3999 (0xF9F) since the count is zero-based.

- Write the **QEICTL** register with the value of 0x0000.0018.
- Write the **QEIMAXPOS** register with the value of 0x0000.0F9F.

5. Enable the quadrature encoder by setting bit 0 of the **QEICTL** register.
6. Delay for some time.
7. Read the encoder position by reading the **QEIPOS** register value.

20.4 Register Map

Table 20-1 on page 578 lists the QEI registers. The offset listed is a hexadecimal increment to the register's address, relative to the module's base address:

- QEI0: 0x4002.C000
- QEI1: 0x4002.D000

Table 20-1. QEI Register Map

Offset	Name	Type	Reset	Description	See page
0x000	QEICTL	R/W	0x0000.0000	QEI Control	579
0x004	QEISTAT	RO	0x0000.0000	QEI Status	581
0x008	QEIPOS	R/W	0x0000.0000	QEI Position	582
0x00C	QEIMAXPOS	R/W	0x0000.0000	QEI Maximum Position	583
0x010	QEILOAD	R/W	0x0000.0000	QEI Timer Load	584
0x014	QEITIME	RO	0x0000.0000	QEI Timer	585
0x018	QEICOUNT	RO	0x0000.0000	QEI Velocity Counter	586
0x01C	QEISPEED	RO	0x0000.0000	QEI Velocity	587
0x020	QEIINTEN	R/W	0x0000.0000	QEI Interrupt Enable	588
0x024	QEIRIS	RO	0x0000.0000	QEI Raw Interrupt Status	589
0x028	QEIISC	R/W1C	0x0000.0000	QEI Interrupt Status and Clear	590

20.5 Register Descriptions

The remainder of this section lists and describes the QEI registers, in numerical order by address offset.

Register 1: QEI Control (QEICTL), offset 0x000

This register contains the configuration of the QEI module. Separate enables are provided for the quadrature encoder and the velocity capture blocks; the quadrature encoder must be enabled in order to capture the velocity, but the velocity does not need to be captured in applications that do not need it. The phase signal interpretation, phase swap, Position Update mode, Position Reset mode, and velocity predivider are all set via this register.

QEI Control (QEICTL)

QEI0 base: 0x4002.C000
QEI1 base: 0x4002.D000
Offset 0x000
Type R/W, reset 0x0000.0000

	31	30	29	28	27	26	25	24	23	22	21	20	19	18	17	16
	reserved															
Type	RO	RO	RO	RO	RO	RO	RO	RO	RO	RO	RO	RO	RO	RO	RO	RO
Reset	0	0	0	0	0	0	0	0	0	0	0	0	0	0	0	0

	15	14	13	12	11	10	9	8	7	6	5	4	3	2	1	0
	reserved			STALLEN	INVI	INVB	INVA	VelDiv			VelEn	ResMode	CapMode	SigMode	Swap	Enable
Type	RO	RO	RO	R/W	R/W	R/W	R/W	R/W	R/W	R/W	R/W	R/W	R/W	R/W	R/W	R/W
Reset	0	0	0	0	0	0	0	0	0	0	0	0	0	0	0	0

Bit/Field	Name	Type	Reset	Description
31:13	reserved	RO	0x00	Software should not rely on the value of a reserved bit. To provide compatibility with future products, the value of a reserved bit should be preserved across a read-modify-write operation.
12	STALLEN	R/W	0	Stall QEI When set, the QEI stalls when the microcontroller asserts Halt.
11	INVI	R/W	0	Invert Index Pulse When set , the input Index Pulse is inverted.
10	INVB	R/W	0	Invert PhB When set, the PhB input is inverted.
9	INVA	R/W	0	Invert PhA When set, the PhA input is inverted.
8:6	VelDiv	R/W	0x0	Predivide Velocity A predivider of the input quadrature pulses before being applied to the QEICOUNT accumulator. This field can be set to the following values:

Value	Predivider
0x0	÷1
0x1	÷2
0x2	÷4
0x3	÷8
0x4	÷16
0x5	÷32
0x6	÷64
0x7	÷128

Bit/Field	Name	Type	Reset	Description
5	VelEn	R/W	0	Capture Velocity When set, enables capture of the velocity of the quadrature encoder.
4	ResMode	R/W	0	Reset Mode The Reset mode for the position counter. When 0, the position counter is reset when it reaches the maximum; when 1, the position counter is reset when the index pulse is captured.
3	CapMode	R/W	0	Capture Mode The Capture mode defines the phase edges that are counted in the position. When 0, only the PhA edges are counted; when 1, the PhA and PhB edges are counted, providing twice the positional resolution but half the range.
2	SigMode	R/W	0	Signal Mode When 1, the PhA and PhB signals are clock and direction; when 0, they are quadrature phase signals.
1	Swap	R/W	0	Swap Signals Swaps the PhA and PhB signals.
0	Enable	R/W	0	Enable QEI Enables the quadrature encoder module.

Register 2: QEI Status (QEISTAT), offset 0x004

This register provides status about the operation of the QEI module.

QEI Status (QEISTAT)

QEI0 base: 0x4002.C000
QEI1 base: 0x4002.D000
Offset 0x004
Type RO, reset 0x0000.0000

	31	30	29	28	27	26	25	24	23	22	21	20	19	18	17	16
	reserved															
Type	RO	RO	RO	RO	RO	RO	RO	RO	RO	RO	RO	RO	RO	RO	RO	RO
Reset	0	0	0	0	0	0	0	0	0	0	0	0	0	0	0	0

	15	14	13	12	11	10	9	8	7	6	5	4	3	2	1	0
	reserved														Direction	Error
Type	RO	RO	RO	RO	RO	RO	RO	RO	RO	RO	RO	RO	RO	RO	RO	RO
Reset	0	0	0	0	0	0	0	0	0	0	0	0	0	0	0	0

Bit/Field	Name	Type	Reset	Description
31:2	reserved	RO	0x00	Software should not rely on the value of a reserved bit. To provide compatibility with future products, the value of a reserved bit should be preserved across a read-modify-write operation.
1	Direction	RO	0	Direction of Rotation Indicates the direction the encoder is rotating. The `Direction` values are defined as follows: Value Description 0 Forward rotation 1 Reverse rotation
0	Error	RO	0	Error Detected Indicates that an error was detected in the gray code sequence (that is, both signals changing at the same time).

Register 3: QEI Position (QEIPOS), offset 0x008

This register contains the current value of the position integrator. Its value is updated by inputs on the QEI phase inputs, and can be set to a specific value by writing to it.

QEI Position (QEIPOS)

QEI0 base: 0x4002.C000
QEI1 base: 0x4002.D000
Offset 0x008
Type R/W, reset 0x0000.0000

	31	30	29	28	27	26	25	24	23	22	21	20	19	18	17	16
	Position															
Type	R/W	R/W	R/W	R/W	R/W	R/W	R/W	R/W	R/W	R/W	R/W	R/W	R/W	R/W	R/W	R/W
Reset	0	0	0	0	0	0	0	0	0	0	0	0	0	0	0	0

	15	14	13	12	11	10	9	8	7	6	5	4	3	2	1	0
	Position															
Type	R/W	R/W	R/W	R/W	R/W	R/W	R/W	R/W	R/W	R/W	R/W	R/W	R/W	R/W	R/W	R/W
Reset	0	0	0	0	0	0	0	0	0	0	0	0	0	0	0	0

Bit/Field	Name	Type	Reset	Description
31:0	Position	R/W	0x00	Current Position Integrator Value The current value of the position integrator.

Register 4: QEI Maximum Position (QEIMAXPOS), offset 0x00C

This register contains the maximum value of the position integrator. When moving forward, the position register resets to zero when it increments past this value. When moving backward, the position register resets to this value when it decrements from zero.

QEI Maximum Position (QEIMAXPOS)

QEI0 base: 0x4002.C000
QEI1 base: 0x4002.D000
Offset 0x00C
Type R/W, reset 0x0000.0000

	31	30	29	28	27	26	25	24	23	22	21	20	19	18	17	16
	MaxPos															
Type	R/W	R/W	R/W	R/W	R/W	R/W	R/W	R/W	R/W	R/W	R/W	R/W	R/W	R/W	R/W	R/W
Reset	0	0	0	0	0	0	0	0	0	0	0	0	0	0	0	0

	15	14	13	12	11	10	9	8	7	6	5	4	3	2	1	0
	MaxPos															
Type	R/W	R/W	R/W	R/W	R/W	R/W	R/W	R/W	R/W	R/W	R/W	R/W	R/W	R/W	R/W	R/W
Reset	0	0	0	0	0	0	0	0	0	0	0	0	0	0	0	0

Bit/Field	Name	Type	Reset	Description
31:0	MaxPos	R/W	0x00	Maximum Position Integrator Value The maximum value of the position integrator.

Register 5: QEI Timer Load (QEILOAD), offset 0x010

This register contains the load value for the velocity timer. Since this value is loaded into the timer the clock cycle after the timer is zero, this value should be one less than the number of clocks in the desired period. So, for example, to have 2000 clocks per timer period, this register should contain 1999.

QEI Timer Load (QEILOAD)

QEI0 base: 0x4002.C000
QEI1 base: 0x4002.D000
Offset 0x010
Type R/W, reset 0x0000.0000

	31	30	29	28	27	26	25	24	23	22	21	20	19	18	17	16
	Load															
Type	R/W	R/W	R/W	R/W	R/W	R/W	R/W	R/W	R/W	R/W	R/W	R/W	R/W	R/W	R/W	R/W
Reset	0	0	0	0	0	0	0	0	0	0	0	0	0	0	0	0

	15	14	13	12	11	10	9	8	7	6	5	4	3	2	1	0
	Load															
Type	R/W	R/W	R/W	R/W	R/W	R/W	R/W	R/W	R/W	R/W	R/W	R/W	R/W	R/W	R/W	R/W
Reset	0	0	0	0	0	0	0	0	0	0	0	0	0	0	0	0

Bit/Field	Name	Type	Reset	Description
31:0	Load	R/W	0x00	Velocity Timer Load Value The load value for the velocity timer.

Register 6: QEI Timer (QEITIME), offset 0x014

This register contains the current value of the velocity timer. This counter does not increment when `VelEn` in **QEICTL** is 0.

QEI Timer (QEITIME)

QEI0 base: 0x4002.C000
QEI1 base: 0x4002.D000
Offset 0x014
Type RO, reset 0x0000.0000

	31	30	29	28	27	26	25	24	23	22	21	20	19	18	17	16
	Time															
Type	RO	RO	RO	RO	RO	RO	RO	RO	RO	RO	RO	RO	RO	RO	RO	RO
Reset	0	0	0	0	0	0	0	0	0	0	0	0	0	0	0	0

	15	14	13	12	11	10	9	8	7	6	5	4	3	2	1	0
	Time															
Type	RO	RO	RO	RO	RO	RO	RO	RO	RO	RO	RO	RO	RO	RO	RO	RO
Reset	0	0	0	0	0	0	0	0	0	0	0	0	0	0	0	0

Bit/Field	Name	Type	Reset	Description
31:0	Time	RO	0x00	Velocity Timer Current Value The current value of the velocity timer.

Register 7: QEI Velocity Counter (QEICOUNT), offset 0x018

This register contains the running count of velocity pulses for the current time period. Since this is a running total, the time period to which it applies cannot be known with precision (that is, a read of this register does not necessarily correspond to the time returned by the **QEITIME** register since there is a small window of time between the two reads, during which time either value may have changed). The **QEISPEED** register should be used to determine the actual encoder velocity; this register is provided for information purposes only. This counter does not increment when `VelEn` in **QEICTL** is 0.

QEI Velocity Counter (QEICOUNT)

QEI0 base: 0x4002.C000
QEI1 base: 0x4002.D000
Offset 0x018
Type RO, reset 0x0000.0000

	31	30	29	28	27	26	25	24	23	22	21	20	19	18	17	16
	Count															
Type	RO	RO	RO	RO	RO	RO	RO	RO	RO	RO	RO	RO	RO	RO	RO	RO
Reset	0	0	0	0	0	0	0	0	0	0	0	0	0	0	0	0

	15	14	13	12	11	10	9	8	7	6	5	4	3	2	1	0
	Count															
Type	RO	RO	RO	RO	RO	RO	RO	RO	RO	RO	RO	RO	RO	RO	RO	RO
Reset	0	0	0	0	0	0	0	0	0	0	0	0	0	0	0	0

Bit/Field	Name	Type	Reset	Description
31:0	Count	RO	0x00	Velocity Pulse Count The running total of encoder pulses during this velocity timer period.

Register 8: QEI Velocity (QEISPEED), offset 0x01C

This register contains the most recently measured velocity of the quadrature encoder. This corresponds to the number of velocity pulses counted in the previous velocity timer period. This register does not update when `VelEn` in **QEICTL** is 0.

QEI Velocity (QEISPEED)

QEI0 base: 0x4002.C000
QEI1 base: 0x4002.D000
Offset 0x01C
Type RO, reset 0x0000.0000

	31	30	29	28	27	26	25	24	23	22	21	20	19	18	17	16
	Speed															
Type	RO	RO	RO	RO	RO	RO	RO	RO	RO	RO	RO	RO	RO	RO	RO	RO
Reset	0	0	0	0	0	0	0	0	0	0	0	0	0	0	0	0

	15	14	13	12	11	10	9	8	7	6	5	4	3	2	1	0
	Speed															
Type	RO	RO	RO	RO	RO	RO	RO	RO	RO	RO	RO	RO	RO	RO	RO	RO
Reset	0	0	0	0	0	0	0	0	0	0	0	0	0	0	0	0

Bit/Field	Name	Type	Reset	Description
31:0	Speed	RO	0x00	Velocity The measured speed of the quadrature encoder in pulses per period.

Register 9: QEI Interrupt Enable (QEIINTEN), offset 0x020

This register contains enables for each of the QEI module's interrupts. An interrupt is asserted to the controller if its corresponding bit in this register is set to 1.

QEI Interrupt Enable (QEIINTEN)

QEI0 base: 0x4002.C000
QEI1 base: 0x4002.D000
Offset 0x020
Type R/W, reset 0x0000.0000

	31	30	29	28	27	26	25	24	23	22	21	20	19	18	17	16
	reserved															
Type	RO	RO	RO	RO	RO	RO	RO	RO	RO	RO	RO	RO	RO	RO	RO	RO
Reset	0	0	0	0	0	0	0	0	0	0	0	0	0	0	0	0

	15	14	13	12	11	10	9	8	7	6	5	4	3	2	1	0
	reserved												IntError	IntDir	IntTimer	IntIndex
Type	RO	RO	RO	RO	RO	RO	RO	RO	RO	RO	RO	RO	R/W	R/W	R/W	R/W
Reset	0	0	0	0	0	0	0	0	0	0	0	0	0	0	0	0

Bit/Field	Name	Type	Reset	Description
31:4	reserved	RO	0x00	Software should not rely on the value of a reserved bit. To provide compatibility with future products, the value of a reserved bit should be preserved across a read-modify-write operation.
3	IntError	R/W	0	Phase Error Interrupt Enable When 1, an interrupt occurs when a phase error is detected.
2	IntDir	R/W	0	Direction Change Interrupt Enable When 1, an interrupt occurs when the direction changes.
1	IntTimer	R/W	0	Timer Expires Interrupt Enable When 1, an interrupt occurs when the velocity timer expires.
0	IntIndex	R/W	0	Index Pulse Detected Interrupt Enable When 1, an interrupt occurs when the index pulse is detected.

Register 10: QEI Raw Interrupt Status (QEIRIS), offset 0x024

This register provides the current set of interrupt sources that are asserted, regardless of whether they cause an interrupt to be asserted to the controller (this is set through the **QEIINTEN** register). Bits set to 1 indicate the latched events that have occurred; a zero bit indicates that the event in question has not occurred.

QEI Raw Interrupt Status (QEIRIS)

QEI0 base: 0x4002.C000
QEI1 base: 0x4002.D000
Offset 0x024
Type RO, reset 0x0000.0000

	31	30	29	28	27	26	25	24	23	22	21	20	19	18	17	16
	reserved															
Type	RO	RO	RO	RO	RO	RO	RO	RO	RO	RO	RO	RO	RO	RO	RO	RO
Reset	0	0	0	0	0	0	0	0	0	0	0	0	0	0	0	0

	15	14	13	12	11	10	9	8	7	6	5	4	3	2	1	0
	reserved												IntError	IntDir	IntTimer	IntIndex
Type	RO	RO	RO	RO	RO	RO	RO	RO	RO	RO	RO	RO	RO	RO	RO	RO
Reset	0	0	0	0	0	0	0	0	0	0	0	0	0	0	0	0

Bit/Field	Name	Type	Reset	Description
31:4	reserved	RO	0x00	Software should not rely on the value of a reserved bit. To provide compatibility with future products, the value of a reserved bit should be preserved across a read-modify-write operation.
3	IntError	RO	0	Phase Error Detected Indicates that a phase error was detected.
2	IntDir	RO	0	Direction Change Detected Indicates that the direction has changed.
1	IntTimer	RO	0	Velocity Timer Expired Indicates that the velocity timer has expired.
0	IntIndex	RO	0	Index Pulse Asserted Indicates that the index pulse has occurred.

Register 11: QEI Interrupt Status and Clear (QEIISC), offset 0x028

This register provides the current set of interrupt sources that are asserted to the controller. Bits set to 1 indicate the latched events that have occurred; a zero bit indicates that the event in question has not occurred. This is a R/W1C register; writing a 1 to a bit position clears the corresponding interrupt reason.

QEI Interrupt Status and Clear (QEIISC)

QEI0 base: 0x4002.C000
QEI1 base: 0x4002.D000
Offset 0x028
Type R/W1C, reset 0x0000.0000

	31	30	29	28	27	26	25	24	23	22	21	20	19	18	17	16
	reserved															
Type	RO	RO	RO	RO	RO	RO	RO	RO	RO	RO	RO	RO	RO	RO	RO	RO
Reset	0	0	0	0	0	0	0	0	0	0	0	0	0	0	0	0

	15	14	13	12	11	10	9	8	7	6	5	4	3	2	1	0
	reserved												IntError	IntDir	IntTimer	IntIndex
Type	RO	RO	RO	RO	RO	RO	RO	RO	RO	RO	RO	RO	R/W1C	R/W1C	R/W1C	R/W1C
Reset	0	0	0	0	0	0	0	0	0	0	0	0	0	0	0	0

Bit/Field	Name	Type	Reset	Description
31:4	reserved	RO	0x00	Software should not rely on the value of a reserved bit. To provide compatibility with future products, the value of a reserved bit should be preserved across a read-modify-write operation.
3	IntError	R/W1C	0	Phase Error Interrupt Indicates that a phase error was detected.
2	IntDir	R/W1C	0	Direction Change Interrupt Indicates that the direction has changed.
1	IntTimer	R/W1C	0	Velocity Timer Expired Interrupt Indicates that the velocity timer has expired.
0	IntIndex	R/W1C	0	Index Pulse Interrupt Indicates that the index pulse has occurred.

21 Pin Diagram

The LM3S8962 microcontroller pin diagrams are shown below.

Figure 21-1. 100-Pin LQFP Package Pin Diagram

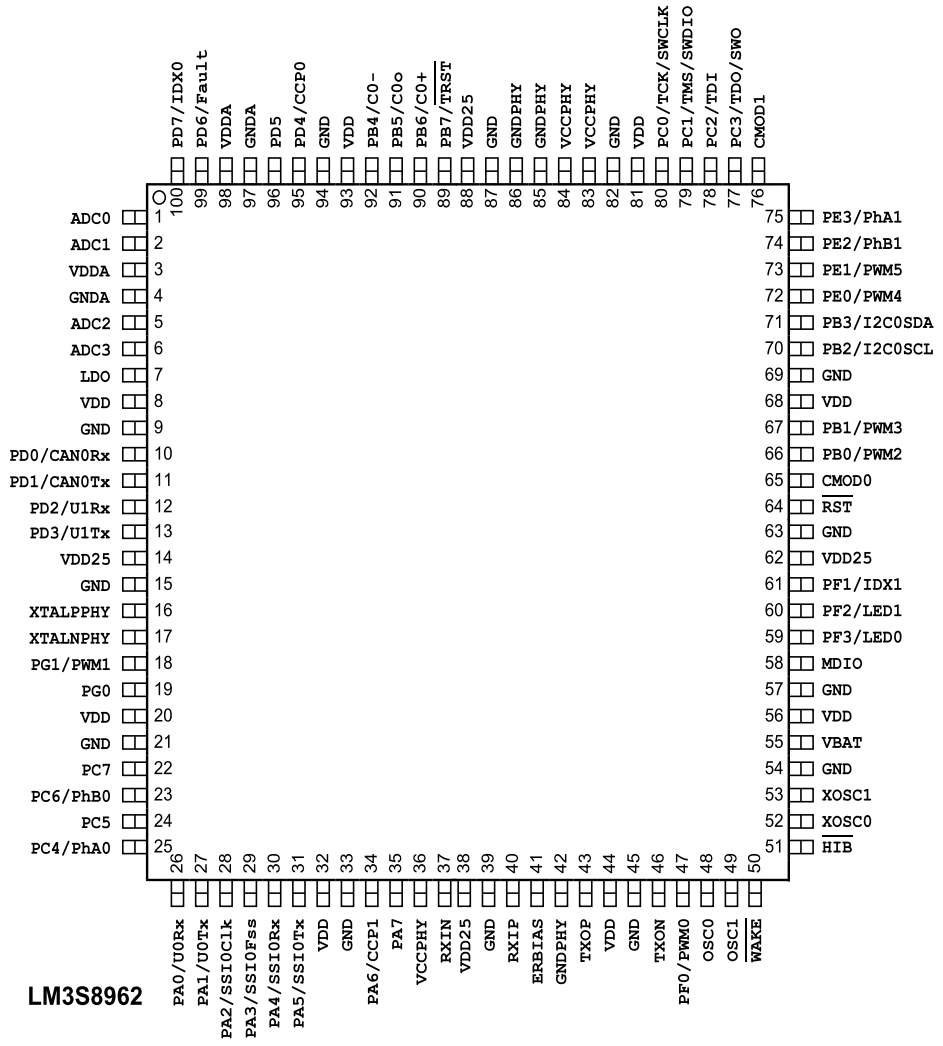

Figure 21-2. 108-Ball BGA Package Pin Diagram (Top View)

	1	2	3	4	5	6	7	8	9	10	11	12
A	ADC1	NC	NC	NC	GNDA	PB4/ C0-	PB6/ C0+	PB7/ TRST	PC0/ TCK/ SWCLK	PC3/ TDO/ SWO	PE0/ PWM4	PE3/ PhA1
B	ADC0	ADC3	ADC2	NC	GNDA	GND	PB5/ C0o	PC2/ TDI	PC1/ TMS/ SWDIO	CMOD1	PE2/ PhB1	PE1/ PWM5
C	NC	NC	VDD25	GND	GND	VDDA	VDDA	GNDPHY	GNDPHY	VCCPHY	PB2/ I2C0SCL	PB3/ I2C0SDA
D	NC	NC	VDD25							VCCPHY	VCCPHY	PB1/ PWM3
E	PD4/ CCP0	PD5	LDO							VDD33	CMOD0	PB0/ PWM2
F	PD7/ IDX0	PD6/ Fault	VDD25							GND	GND	GND
G	PD0/ CAN0Rx	PD1/ CAN0Tx	VDD25							VDD33	VDD33	VDD33
H	PD3/ U1Tx	PD2/ U1Rx	GND							VDD33	$\overline{\text{RST}}$	PF1/ IDX1
J	XTALNPHY	XTALPPHY	GND							GND	PF2/ LED1	PF3/ LED0
K	PG0	PG1/ PWM1	ERBIAS	GNDPHY	GND	GND	VDD33	VDD33	VDD33	GND	XOSC0	XOSC1
L	PC4/ PhA0	PC7	PA0/ U0Rx	PA3/ SSI0Fss	PA4/ SSI0Rx	PA6/ CCP1	RXIN	TXON	MDIO	GND	OSC0	VBAT
M	PC5	PC6/ PhB0	PA1/ U0Tx	PA2/ SSI0Clk	PA5/ SSI0Tx	PA7	RXIP	TXOP	PF0/ PWM0	$\overline{\text{WAKE}}$	OSC1	$\overline{\text{HIB}}$

LM3S8962

22 Signal Tables

The following tables list the signals available for each pin. Functionality is enabled by software with the **GPIOAFSEL** register.

Important: All multiplexed pins are GPIOs by default, with the exception of the five JTAG pins (PB7 and PC[3:0]) which default to the JTAG functionality.

Table 22-1 on page 593 shows the pin-to-signal-name mapping, including functional characteristics of the signals. Table 22-2 on page 597 lists the signals in alphabetical order by signal name.

Table 22-3 on page 601 groups the signals by functionality, except for GPIOs. Table 22-4 on page 604 lists the GPIO pins and their alternate functionality.

22.1 100-Pin LQFP Package Pin Tables

Table 22-1. Signals by Pin Number

Pin Number	Pin Name	Pin Type	Buffer Type	Description
1	ADC0	I	Analog	Analog-to-digital converter input 0.
2	ADC1	I	Analog	Analog-to-digital converter input 1.
3	VDDA	-	Power	The positive supply (3.3 V) for the analog circuits (ADC, Analog Comparators, etc.). These are separated from VDD to minimize the electrical noise contained on VDD from affecting the analog functions.
4	GNDA	-	Power	The ground reference for the analog circuits (ADC, Analog Comparators, etc.). These are separated from GND to minimize the electrical noise contained on VDD from affecting the analog functions.
5	ADC2	I	Analog	Analog-to-digital converter input 2.
6	ADC3	I	Analog	Analog-to-digital converter input 3.
7	LDO	-	Power	Low drop-out regulator output voltage. This pin requires an external capacitor between the pin and GND of 1 µF or greater. The LDO pin must also be connected to the VDD25 pins at the board level in addition to the decoupling capacitor(s).
8	VDD	-	Power	Positive supply for I/O and some logic.
9	GND	-	Power	Ground reference for logic and I/O pins.
10	PD0	I/O	TTL	GPIO port D bit 0
	CAN0Rx	I	TTL	CAN module 0 receive
11	PD1	I/O	TTL	GPIO port D bit 1
	CAN0Tx	O	TTL	CAN module 0 transmit
12	PD2	I/O	TTL	GPIO port D bit 2
	U1Rx	I	TTL	UART module 1 receive. When in IrDA mode, this signal has IrDA modulation.
13	PD3	I/O	TTL	GPIO port D bit 3
	U1Tx	O	TTL	UART module 1 transmit. When in IrDA mode, this signal has IrDA modulation.

Pin Number	Pin Name	Pin Type	Buffer Type	Description
14	VDD25	-	Power	Positive supply for most of the logic function, including the processor core and most peripherals.
15	GND	-	Power	Ground reference for logic and I/O pins.
16	XTALPPHY	I	TTL	XTALP of the Ethernet PHY
17	XTALNPHY	O	TTL	XTALN of the Ethernet PHY
18	PG1	I/O	TTL	GPIO port G bit 1
	PWM1	O	TTL	PWM 1
19	PG0	I/O	TTL	GPIO port G bit 0
20	VDD	-	Power	Positive supply for I/O and some logic.
21	GND	-	Power	Ground reference for logic and I/O pins.
22	PC7	I/O	TTL	GPIO port C bit 7
23	PC6	I/O	TTL	GPIO port C bit 6
	PhB0	I	TTL	QEI module 0 Phase B
24	PC5	I/O	TTL	GPIO port C bit 5
25	PC4	I/O	TTL	GPIO port C bit 4
	PhA0	I	TTL	QEI module 0 Phase A
26	PA0	I/O	TTL	GPIO port A bit 0
	U0Rx	I	TTL	UART module 0 receive. When in IrDA mode, this signal has IrDA modulation.
27	PA1	I/O	TTL	GPIO port A bit 1
	U0Tx	O	TTL	UART module 0 transmit. When in IrDA mode, this signal has IrDA modulation.
28	PA2	I/O	TTL	GPIO port A bit 2
	SSI0Clk	I/O	TTL	SSI module 0 clock
29	PA3	I/O	TTL	GPIO port A bit 3
	SSI0Fss	I/O	TTL	SSI module 0 frame
30	PA4	I/O	TTL	GPIO port A bit 4
	SSI0Rx	I	TTL	SSI module 0 receive
31	PA5	I/O	TTL	GPIO port A bit 5
	SSI0Tx	O	TTL	SSI module 0 transmit
32	VDD	-	Power	Positive supply for I/O and some logic.
33	GND	-	Power	Ground reference for logic and I/O pins.
34	PA6	I/O	TTL	GPIO port A bit 6
	CCP1	I/O	TTL	Capture/Compare/PWM 1
35	PA7	I/O	TTL	GPIO port A bit 7
36	VCCPHY	-	Power	VCC of the Ethernet PHY
37	RXIN	I	Analog	RXIN of the Ethernet PHY
38	VDD25	-	Power	Positive supply for most of the logic function, including the processor core and most peripherals.
39	GND	-	Power	Ground reference for logic and I/O pins.
40	RXIP	I	Analog	RXIP of the Ethernet PHY
41	ERBIAS	I	Analog	12.4 KOhm resistor (1% precision) used internally for Ethernet PHY.

Pin Number	Pin Name	Pin Type	Buffer Type	Description
42	GNDPHY	-	Power	GND of the Ethernet PHY
43	TXOP	O	Analog	TXOP of the Ethernet PHY
44	VDD	-	Power	Positive supply for I/O and some logic.
45	GND	-	Power	Ground reference for logic and I/O pins.
46	TXON	O	Analog	TXON of the Ethernet PHY
47	PF0	I/O	TTL	GPIO port F bit 0
	PWM0	O	TTL	PWM 0
48	OSC0	I	Analog	Main oscillator crystal input or an external clock reference input.
49	OSC1	O	Analog	Main oscillator crystal output.
50	$\overline{\text{WAKE}}$	I	-	An external input that brings the processor out of hibernate mode when asserted.
51	$\overline{\text{HIB}}$	O	TTL	An output that indicates the processor is in hibernate mode.
52	XOSC0	I	Analog	Hibernation Module oscillator crystal input or an external clock reference input. Note that this is either a 4.19-MHz crystal or a 32.768-kHz oscillator for the Hibernation Module RTC. See the CLKSEL bit in the **HIBCTL** register.
53	XOSC1	O	Analog	Hibernation Module oscillator crystal output.
54	GND	-	Power	Ground reference for logic and I/O pins.
55	VBAT	-	Power	Power source for the Hibernation Module. It is normally connected to the positive terminal of a battery and serves as the battery backup/Hibernation Module power-source supply.
56	VDD	-	Power	Positive supply for I/O and some logic.
57	GND	-	Power	Ground reference for logic and I/O pins.
58	MDIO	I/O	TTL	MDIO of the Ethernet PHY
59	PF3	I/O	TTL	GPIO port F bit 3
	LED0	O	TTL	MII LED 0
60	PF2	I/O	TTL	GPIO port F bit 2
	LED1	O	TTL	MII LED 1
61	PF1	I/O	TTL	GPIO port F bit 1
	IDX1	I	TTL	QEI module 1 index
62	VDD25	-	Power	Positive supply for most of the logic function, including the processor core and most peripherals.
63	GND	-	Power	Ground reference for logic and I/O pins.
64	$\overline{\text{RST}}$	I	TTL	System reset input.
65	CMOD0	I/O	TTL	CPU Mode bit 0. Input must be set to logic 0 (grounded); other encodings reserved.
66	PB0	I/O	TTL	GPIO port B bit 0
	PWM2	O	TTL	PWM 2
67	PB1	I/O	TTL	GPIO port B bit 1
	PWM3	O	TTL	PWM 3

Pin Number	Pin Name	Pin Type	Buffer Type	Description
68	VDD	-	Power	Positive supply for I/O and some logic.
69	GND	-	Power	Ground reference for logic and I/O pins.
70	PB2	I/O	TTL	GPIO port B bit 2
	I2C0SCL	I/O	OD	I2C module 0 clock
71	PB3	I/O	TTL	GPIO port B bit 3
	I2C0SDA	I/O	OD	I2C module 0 data
72	PE0	I/O	TTL	GPIO port E bit 0
	PWM4	O	TTL	PWM 4
73	PE1	I/O	TTL	GPIO port E bit 1
	PWM5	O	TTL	PWM 5
74	PE2	I/O	TTL	GPIO port E bit 2
	PhB1	I	TTL	QEI module 1 Phase B
75	PE3	I/O	TTL	GPIO port E bit 3
	PhA1	I	TTL	QEI module 1 Phase A
76	CMOD1	I/O	TTL	CPU Mode bit 1. Input must be set to logic 0 (grounded); other encodings reserved.
77	PC3	I/O	TTL	GPIO port C bit 3
	TDO	O	TTL	JTAG TDO and SWO
	SWO	O	TTL	JTAG TDO and SWO
78	PC2	I/O	TTL	GPIO port C bit 2
	TDI	I	TTL	JTAG TDI
79	PC1	I/O	TTL	GPIO port C bit 1
	TMS	I/O	TTL	JTAG TMS and SWDIO
	SWDIO	I/O	TTL	JTAG TMS and SWDIO
80	PC0	I/O	TTL	GPIO port C bit 0
	TCK	I	TTL	JTAG/SWD CLK
	SWCLK	I	TTL	JTAG/SWD CLK
81	VDD	-	Power	Positive supply for I/O and some logic.
82	GND	-	Power	Ground reference for logic and I/O pins.
83	VCCPHY	-	Power	VCC of the Ethernet PHY
84	VCCPHY	-	Power	VCC of the Ethernet PHY
85	GNDPHY	-	Power	GND of the Ethernet PHY
86	GNDPHY	-	Power	GND of the Ethernet PHY
87	GND	-	Power	Ground reference for logic and I/O pins.
88	VDD25	-	Power	Positive supply for most of the logic function, including the processor core and most peripherals.
89	PB7	I/O	TTL	GPIO port B bit 7
	TRST	I	TTL	JTAG TRSTn
90	PB6	I/O	TTL	GPIO port B bit 6
	C0+	I	Analog	Analog comparator 0 positive input
91	PB5	I/O	TTL	GPIO port B bit 5
	C0o	O	TTL	Analog comparator 0 output

Pin Number	Pin Name	Pin Type	Buffer Type	Description
92	PB4	I/O	TTL	GPIO port B bit 4
	C0-	I	Analog	Analog comparator 0 negative input
93	VDD	-	Power	Positive supply for I/O and some logic.
94	GND	-	Power	Ground reference for logic and I/O pins.
95	PD4	I/O	TTL	GPIO port D bit 4
	CCP0	I/O	TTL	Capture/Compare/PWM 0
96	PD5	I/O	TTL	GPIO port D bit 5
97	GNDA	-	Power	The ground reference for the analog circuits (ADC, Analog Comparators, etc.). These are separated from GND to minimize the electrical noise contained on VDD from affecting the analog functions.
98	VDDA	-	Power	The positive supply (3.3 V) for the analog circuits (ADC, Analog Comparators, etc.). These are separated from VDD to minimize the electrical noise contained on VDD from affecting the analog functions.
99	PD6	I/O	TTL	GPIO port D bit 6
	Fault	I	TTL	PWM Fault
100	PD7	I/O	TTL	GPIO port D bit 7
	IDX0	I	TTL	QEI module 0 index

Table 22-2. Signals by Signal Name

Pin Name	Pin Number	Pin Type	Buffer Type	Description
ADC0	1	I	Analog	Analog-to-digital converter input 0.
ADC1	2	I	Analog	Analog-to-digital converter input 1.
ADC2	5	I	Analog	Analog-to-digital converter input 2.
ADC3	6	I	Analog	Analog-to-digital converter input 3.
C0+	90	I	Analog	Analog comparator 0 positive input
C0-	92	I	Analog	Analog comparator 0 negative input
C0o	91	O	TTL	Analog comparator 0 output
CAN0Rx	10	I	TTL	CAN module 0 receive
CAN0Tx	11	O	TTL	CAN module 0 transmit
CCP0	95	I/O	TTL	Capture/Compare/PWM 0
CCP1	34	I/O	TTL	Capture/Compare/PWM 1
CMOD0	65	I/O	TTL	CPU Mode bit 0. Input must be set to logic 0 (grounded); other encodings reserved.
CMOD1	76	I/O	TTL	CPU Mode bit 1. Input must be set to logic 0 (grounded); other encodings reserved.
ERBIAS	41	I	Analog	12.4 KOhm resistor (1% precision) used internally for Ethernet PHY.
Fault	99	I	TTL	PWM Fault
GND	9	-	Power	Ground reference for logic and I/O pins.
GND	15	-	Power	Ground reference for logic and I/O pins.
GND	21	-	Power	Ground reference for logic and I/O pins.
GND	33	-	Power	Ground reference for logic and I/O pins.

Pin Name	Pin Number	Pin Type	Buffer Type	Description
GND	39	-	Power	Ground reference for logic and I/O pins.
GND	45	-	Power	Ground reference for logic and I/O pins.
GND	54	-	Power	Ground reference for logic and I/O pins.
GND	57	-	Power	Ground reference for logic and I/O pins.
GND	63	-	Power	Ground reference for logic and I/O pins.
GND	69	-	Power	Ground reference for logic and I/O pins.
GND	82	-	Power	Ground reference for logic and I/O pins.
GND	87	-	Power	Ground reference for logic and I/O pins.
GND	94	-	Power	Ground reference for logic and I/O pins.
GNDA	4	-	Power	The ground reference for the analog circuits (ADC, Analog Comparators, etc.). These are separated from GND to minimize the electrical noise contained on VDD from affecting the analog functions.
GNDA	97	-	Power	The ground reference for the analog circuits (ADC, Analog Comparators, etc.). These are separated from GND to minimize the electrical noise contained on VDD from affecting the analog functions.
GNDPHY	42	-	Power	GND of the Ethernet PHY
GNDPHY	85	-	Power	GND of the Ethernet PHY
GNDPHY	86	-	Power	GND of the Ethernet PHY
$\overline{\text{HIB}}$	51	O	TTL	An output that indicates the processor is in hibernate mode.
I2C0SCL	70	I/O	OD	I2C module 0 clock
I2C0SDA	71	I/O	OD	I2C module 0 data
IDX0	100	I	TTL	QEI module 0 index
IDX1	61	I	TTL	QEI module 1 index
LDO	7	-	Power	Low drop-out regulator output voltage. This pin requires an external capacitor between the pin and GND of 1 µF or greater. The LDO pin must also be connected to the VDD25 pins at the board level in addition to the decoupling capacitor(s).
LED0	59	O	TTL	MII LED 0
LED1	60	O	TTL	MII LED 1
MDIO	58	I/O	TTL	MDIO of the Ethernet PHY
OSC0	48	I	Analog	Main oscillator crystal input or an external clock reference input.
OSC1	49	O	Analog	Main oscillator crystal output.
PA0	26	I/O	TTL	GPIO port A bit 0
PA1	27	I/O	TTL	GPIO port A bit 1
PA2	28	I/O	TTL	GPIO port A bit 2
PA3	29	I/O	TTL	GPIO port A bit 3
PA4	30	I/O	TTL	GPIO port A bit 4
PA5	31	I/O	TTL	GPIO port A bit 5
PA6	34	I/O	TTL	GPIO port A bit 6

Pin Name	Pin Number	Pin Type	Buffer Type	Description
PA7	35	I/O	TTL	GPIO port A bit 7
PB0	66	I/O	TTL	GPIO port B bit 0
PB1	67	I/O	TTL	GPIO port B bit 1
PB2	70	I/O	TTL	GPIO port B bit 2
PB3	71	I/O	TTL	GPIO port B bit 3
PB4	92	I/O	TTL	GPIO port B bit 4
PB5	91	I/O	TTL	GPIO port B bit 5
PB6	90	I/O	TTL	GPIO port B bit 6
PB7	89	I/O	TTL	GPIO port B bit 7
PC0	80	I/O	TTL	GPIO port C bit 0
PC1	79	I/O	TTL	GPIO port C bit 1
PC2	78	I/O	TTL	GPIO port C bit 2
PC3	77	I/O	TTL	GPIO port C bit 3
PC4	25	I/O	TTL	GPIO port C bit 4
PC5	24	I/O	TTL	GPIO port C bit 5
PC6	23	I/O	TTL	GPIO port C bit 6
PC7	22	I/O	TTL	GPIO port C bit 7
PD0	10	I/O	TTL	GPIO port D bit 0
PD1	11	I/O	TTL	GPIO port D bit 1
PD2	12	I/O	TTL	GPIO port D bit 2
PD3	13	I/O	TTL	GPIO port D bit 3
PD4	95	I/O	TTL	GPIO port D bit 4
PD5	96	I/O	TTL	GPIO port D bit 5
PD6	99	I/O	TTL	GPIO port D bit 6
PD7	100	I/O	TTL	GPIO port D bit 7
PE0	72	I/O	TTL	GPIO port E bit 0
PE1	73	I/O	TTL	GPIO port E bit 1
PE2	74	I/O	TTL	GPIO port E bit 2
PE3	75	I/O	TTL	GPIO port E bit 3
PF0	47	I/O	TTL	GPIO port F bit 0
PF1	61	I/O	TTL	GPIO port F bit 1
PF2	60	I/O	TTL	GPIO port F bit 2
PF3	59	I/O	TTL	GPIO port F bit 3
PG0	19	I/O	TTL	GPIO port G bit 0
PG1	18	I/O	TTL	GPIO port G bit 1
PhA0	25	I	TTL	QEI module 0 Phase A
PhA1	75	I	TTL	QEI module 1 Phase A
PhB0	23	I	TTL	QEI module 0 Phase B
PhB1	74	I	TTL	QEI module 1 Phase B
PWM0	47	O	TTL	PWM 0
PWM1	18	O	TTL	PWM 1
PWM2	66	O	TTL	PWM 2

Pin Name	Pin Number	Pin Type	Buffer Type	Description
PWM3	67	O	TTL	PWM 3
PWM4	72	O	TTL	PWM 4
PWM5	73	O	TTL	PWM 5
RST	64	I	TTL	System reset input.
RXIN	37	I	Analog	RXIN of the Ethernet PHY
RXIP	40	I	Analog	RXIP of the Ethernet PHY
SSI0Clk	28	I/O	TTL	SSI module 0 clock
SSI0Fss	29	I/O	TTL	SSI module 0 frame
SSI0Rx	30	I	TTL	SSI module 0 receive
SSI0Tx	31	O	TTL	SSI module 0 transmit
SWCLK	80	I	TTL	JTAG/SWD CLK
SWDIO	79	I/O	TTL	JTAG TMS and SWDIO
SWO	77	O	TTL	JTAG TDO and SWO
TCK	80	I	TTL	JTAG/SWD CLK
TDI	78	I	TTL	JTAG TDI
TDO	77	O	TTL	JTAG TDO and SWO
TMS	79	I/O	TTL	JTAG TMS and SWDIO
TRST	89	I	TTL	JTAG TRSTn
TXON	46	O	Analog	TXON of the Ethernet PHY
TXOP	43	O	Analog	TXOP of the Ethernet PHY
U0Rx	26	I	TTL	UART module 0 receive. When in IrDA mode, this signal has IrDA modulation.
U0Tx	27	O	TTL	UART module 0 transmit. When in IrDA mode, this signal has IrDA modulation.
U1Rx	12	I	TTL	UART module 1 receive. When in IrDA mode, this signal has IrDA modulation.
U1Tx	13	O	TTL	UART module 1 transmit. When in IrDA mode, this signal has IrDA modulation.
VBAT	55	-	Power	Power source for the Hibernation Module. It is normally connected to the positive terminal of a battery and serves as the battery backup/Hibernation Module power-source supply.
VCCPHY	36	-	Power	VCC of the Ethernet PHY
VCCPHY	83	-	Power	VCC of the Ethernet PHY
VCCPHY	84	-	Power	VCC of the Ethernet PHY
VDD	8	-	Power	Positive supply for I/O and some logic.
VDD	20	-	Power	Positive supply for I/O and some logic.
VDD	32	-	Power	Positive supply for I/O and some logic.
VDD	44	-	Power	Positive supply for I/O and some logic.
VDD	56	-	Power	Positive supply for I/O and some logic.
VDD	68	-	Power	Positive supply for I/O and some logic.
VDD	81	-	Power	Positive supply for I/O and some logic.
VDD	93	-	Power	Positive supply for I/O and some logic.

Pin Name	Pin Number	Pin Type	Buffer Type	Description
VDD25	14	-	Power	Positive supply for most of the logic function, including the processor core and most peripherals.
VDD25	38	-	Power	Positive supply for most of the logic function, including the processor core and most peripherals.
VDD25	62	-	Power	Positive supply for most of the logic function, including the processor core and most peripherals.
VDD25	88	-	Power	Positive supply for most of the logic function, including the processor core and most peripherals.
VDDA	3	-	Power	The positive supply (3.3 V) for the analog circuits (ADC, Analog Comparators, etc.). These are separated from VDD to minimize the electrical noise contained on VDD from affecting the analog functions.
VDDA	98	-	Power	The positive supply (3.3 V) for the analog circuits (ADC, Analog Comparators, etc.). These are separated from VDD to minimize the electrical noise contained on VDD from affecting the analog functions.
$\overline{\text{WAKE}}$	50	I	-	An external input that brings the processor out of hibernate mode when asserted.
XOSC0	52	I	Analog	Hibernation Module oscillator crystal input or an external clock reference input. Note that this is either a 4.19-MHz crystal or a 32.768-kHz oscillator for the Hibernation Module RTC. See the CLKSEL bit in the **HIBCTL** register.
XOSC1	53	O	Analog	Hibernation Module oscillator crystal output.
XTALNPHY	17	O	TTL	XTALN of the Ethernet PHY
XTALPPHY	16	I	TTL	XTALP of the Ethernet PHY

Table 22-3. Signals by Function, Except for GPIO

Function	Pin Name	Pin Number	Pin Type	Buffer Type	Description
ADC	ADC0	1	I	Analog	Analog-to-digital converter input 0.
	ADC1	2	I	Analog	Analog-to-digital converter input 1.
	ADC2	5	I	Analog	Analog-to-digital converter input 2.
	ADC3	6	I	Analog	Analog-to-digital converter input 3.
Analog Comparators	C0+	90	I	Analog	Analog comparator 0 positive input
	C0-	92	I	Analog	Analog comparator 0 negative input
	C0o	91	O	TTL	Analog comparator 0 output
Controller Area Network	CAN0Rx	10	I	TTL	CAN module 0 receive
	CAN0Tx	11	O	TTL	CAN module 0 transmit
Ethernet PHY	ERBIAS	41	I	Analog	12.4 KOhm resistor (1% precision) used internally for Ethernet PHY.
	GNDPHY	42	-	Power	GND of the Ethernet PHY
	GNDPHY	85	-	Power	GND of the Ethernet PHY

Function	Pin Name	Pin Number	Pin Type	Buffer Type	Description
	GNDPHY	86	-	Power	GND of the Ethernet PHY
	LED0	59	O	TTL	MII LED 0
	LED1	60	O	TTL	MII LED 1
	MDIO	58	I/O	TTL	MDIO of the Ethernet PHY
	RXIN	37	I	Analog	RXIN of the Ethernet PHY
	RXIP	40	I	Analog	RXIP of the Ethernet PHY
	TXON	46	O	Analog	TXON of the Ethernet PHY
	TXOP	43	O	Analog	TXOP of the Ethernet PHY
	VCCPHY	36	-	Power	VCC of the Ethernet PHY
	VCCPHY	83	-	Power	VCC of the Ethernet PHY
	VCCPHY	84	-	Power	VCC of the Ethernet PHY
	XTALNPHY	17	O	TTL	XTALN of the Ethernet PHY
	XTALPPHY	16	I	TTL	XTALP of the Ethernet PHY
General-Purpose Timers	CCP0	95	I/O	TTL	Capture/Compare/PWM 0
	CCP1	34	I/O	TTL	Capture/Compare/PWM 1
I2C	I2C0SCL	70	I/O	OD	I2C module 0 clock
	I2C0SDA	71	I/O	OD	I2C module 0 data
JTAG/SWD/SWO	SWCLK	80	I	TTL	JTAG/SWD CLK
	SWDIO	79	I/O	TTL	JTAG TMS and SWDIO
	SWO	77	O	TTL	JTAG TDO and SWO
	TCK	80	I	TTL	JTAG/SWD CLK
	TDI	78	I	TTL	JTAG TDI
	TDO	77	O	TTL	JTAG TDO and SWO
	TMS	79	I/O	TTL	JTAG TMS and SWDIO
PWM	Fault	99	I	TTL	PWM Fault
	PWM0	47	O	TTL	PWM 0
	PWM1	18	O	TTL	PWM 1
	PWM2	66	O	TTL	PWM 2
	PWM3	67	O	TTL	PWM 3
	PWM4	72	O	TTL	PWM 4
	PWM5	73	O	TTL	PWM 5
Power	GND	9	-	Power	Ground reference for logic and I/O pins.
	GND	15	-	Power	Ground reference for logic and I/O pins.
	GND	21	-	Power	Ground reference for logic and I/O pins.
	GND	33	-	Power	Ground reference for logic and I/O pins.
	GND	39	-	Power	Ground reference for logic and I/O pins.
	GND	45	-	Power	Ground reference for logic and I/O pins.
	GND	54	-	Power	Ground reference for logic and I/O pins.
	GND	57	-	Power	Ground reference for logic and I/O pins.
	GND	63	-	Power	Ground reference for logic and I/O pins.
	GND	69	-	Power	Ground reference for logic and I/O pins.
	GND	82	-	Power	Ground reference for logic and I/O pins.

Function	Pin Name	Pin Number	Pin Type	Buffer Type	Description
	GND	87	-	Power	Ground reference for logic and I/O pins.
	GND	94	-	Power	Ground reference for logic and I/O pins.
	GNDA	4	-	Power	The ground reference for the analog circuits (ADC, Analog Comparators, etc.). These are separated from GND to minimize the electrical noise contained on VDD from affecting the analog functions.
	GNDA	97	-	Power	The ground reference for the analog circuits (ADC, Analog Comparators, etc.). These are separated from GND to minimize the electrical noise contained on VDD from affecting the analog functions.
	$\overline{\text{HIB}}$	51	O	TTL	An output that indicates the processor is in hibernate mode.
	LDO	7	-	Power	Low drop-out regulator output voltage. This pin requires an external capacitor between the pin and GND of 1 µF or greater. The LDO pin must also be connected to the VDD25 pins at the board level in addition to the decoupling capacitor(s).
	VBAT	55	-	Power	Power source for the Hibernation Module. It is normally connected to the positive terminal of a battery and serves as the battery backup/Hibernation Module power-source supply.
	VDD	8	-	Power	Positive supply for I/O and some logic.
	VDD	20	-	Power	Positive supply for I/O and some logic.
	VDD	32	-	Power	Positive supply for I/O and some logic.
	VDD	44	-	Power	Positive supply for I/O and some logic.
	VDD	56	-	Power	Positive supply for I/O and some logic.
	VDD	68	-	Power	Positive supply for I/O and some logic.
	VDD	81	-	Power	Positive supply for I/O and some logic.
	VDD	93	-	Power	Positive supply for I/O and some logic.
	VDD25	14	-	Power	Positive supply for most of the logic function, including the processor core and most peripherals.
	VDD25	38	-	Power	Positive supply for most of the logic function, including the processor core and most peripherals.
	VDD25	62	-	Power	Positive supply for most of the logic function, including the processor core and most peripherals.
	VDD25	88	-	Power	Positive supply for most of the logic function, including the processor core and most peripherals.
	VDDA	3	-	Power	The positive supply (3.3 V) for the analog circuits (ADC, Analog Comparators, etc.). These are separated from VDD to minimize the electrical noise contained on VDD from affecting the analog functions.
	VDDA	98	-	Power	The positive supply (3.3 V) for the analog circuits (ADC, Analog Comparators, etc.). These are separated from VDD to minimize the electrical noise contained on VDD from affecting the analog functions.
	$\overline{\text{WAKE}}$	50	I	-	An external input that brings the processor out of hibernate mode when asserted.
QEI	IDX0	100	I	TTL	QEI module 0 index

Function	Pin Name	Pin Number	Pin Type	Buffer Type	Description
	IDX1	61	I	TTL	QEI module 1 index
	PhA0	25	I	TTL	QEI module 0 Phase A
	PhA1	75	I	TTL	QEI module 1 Phase A
	PhB0	23	I	TTL	QEI module 0 Phase B
	PhB1	74	I	TTL	QEI module 1 Phase B
SSI	SSI0Clk	28	I/O	TTL	SSI module 0 clock
	SSI0Fss	29	I/O	TTL	SSI module 0 frame
	SSI0Rx	30	I	TTL	SSI module 0 receive
	SSI0Tx	31	O	TTL	SSI module 0 transmit
System Control & Clocks	CMOD0	65	I/O	TTL	CPU Mode bit 0. Input must be set to logic 0 (grounded); other encodings reserved.
	CMOD1	76	I/O	TTL	CPU Mode bit 1. Input must be set to logic 0 (grounded); other encodings reserved.
	OSC0	48	I	Analog	Main oscillator crystal input or an external clock reference input.
	OSC1	49	O	Analog	Main oscillator crystal output.
	RST	64	I	TTL	System reset input.
	TRST	89	I	TTL	JTAG TRSTn
	XOSC0	52	I	Analog	Hibernation Module oscillator crystal input or an external clock reference input. Note that this is either a 4.19-MHz crystal or a 32.768-kHz oscillator for the Hibernation Module RTC. See the CLKSEL bit in the **HIBCTL** register.
	XOSC1	53	O	Analog	Hibernation Module oscillator crystal output.
UART	U0Rx	26	I	TTL	UART module 0 receive. When in IrDA mode, this signal has IrDA modulation.
	U0Tx	27	O	TTL	UART module 0 transmit. When in IrDA mode, this signal has IrDA modulation.
	U1Rx	12	I	TTL	UART module 1 receive. When in IrDA mode, this signal has IrDA modulation.
	U1Tx	13	O	TTL	UART module 1 transmit. When in IrDA mode, this signal has IrDA modulation.

Table 22-4. GPIO Pins and Alternate Functions

GPIO Pin	Pin Number	Multiplexed Function	Multiplexed Function
PA0	26	U0Rx	
PA1	27	U0Tx	
PA2	28	SSI0Clk	
PA3	29	SSI0Fss	
PA4	30	SSI0Rx	
PA5	31	SSI0Tx	
PA6	34	CCP1	
PA7	35		
PB0	66	PWM2	
PB1	67	PWM3	

GPIO Pin	Pin Number	Multiplexed Function	Multiplexed Function
PB2	70	I2C0SCL	
PB3	71	I2C0SDA	
PB4	92	C0-	
PB5	91	C0o	
PB6	90	C0+	
PB7	89	TRST	
PC0	80	TCK	SWCLK
PC1	79	TMS	SWDIO
PC2	78	TDI	
PC3	77	TDO	SWO
PC4	25	PhA0	
PC5	24		
PC6	23	PhB0	
PC7	22		
PD0	10	CAN0Rx	
PD1	11	CAN0Tx	
PD2	12	U1Rx	
PD3	13	U1Tx	
PD4	95	CCP0	
PD5	96		
PD6	99	Fault	
PD7	100	IDX0	
PE0	72	PWM4	
PE1	73	PWM5	
PE2	74	PhB1	
PE3	75	PhA1	
PF0	47	PWM0	
PF1	61	IDX1	
PF2	60	LED1	
PF3	59	LED0	
PG0	19		
PG1	18	PWM1	

22.2 108-Pin BGA Package Pin Tables

Table 22-5. Signals by Pin Number

Pin Number	Pin Name	Pin Type	Buffer Type	Description
A1	ADC1	I	Analog	Analog-to-digital converter input 1.
A2	NC	-	-	No connect. Leave the pin electrically unconnected/isolated.
A3	NC	-	-	No connect. Leave the pin electrically unconnected/isolated.

Pin Number	Pin Name	Pin Type	Buffer Type	Description
A4	NC	-	-	No connect. Leave the pin electrically unconnected/isolated.
A5	GNDA	-	Power	The ground reference for the analog circuits (ADC, Analog Comparators, etc.). These are separated from GND to minimize the electrical noise contained on VDD from affecting the analog functions.
A6	PB4	I/O	TTL	GPIO port B bit 4
	C0-	I	Analog	Analog comparator 0 negative input
A7	PB6	I/O	TTL	GPIO port B bit 6
	C0+	I	Analog	Analog comparator 0 positive input
A8	PB7	I/O	TTL	GPIO port B bit 7
	$\overline{\text{TRST}}$	I	TTL	JTAG TRSTn
A9	PC0	I/O	TTL	GPIO port C bit 0
	TCK	I	TTL	JTAG/SWD CLK
	SWCLK	I	TTL	JTAG/SWD CLK
A10	PC3	I/O	TTL	GPIO port C bit 3
	TDO	O	TTL	JTAG TDO and SWO
	SWO	O	TTL	JTAG TDO and SWO
A11	PE0	I/O	TTL	GPIO port E bit 0
	PWM4	O	TTL	PWM 4
A12	PE3	I/O	TTL	GPIO port E bit 3
	PhA1	I	TTL	QEI module 1 Phase A
B1	ADC0	I	Analog	Analog-to-digital converter input 0.
B2	ADC3	I	Analog	Analog-to-digital converter input 3.
B3	ADC2	I	Analog	Analog-to-digital converter input 2.
B4	NC	-	-	No connect. Leave the pin electrically unconnected/isolated.
B5	GNDA	-	Power	The ground reference for the analog circuits (ADC, Analog Comparators, etc.). These are separated from GND to minimize the electrical noise contained on VDD from affecting the analog functions.
B6	GND	-	Power	Ground reference for logic and I/O pins.
B7	PB5	I/O	TTL	GPIO port B bit 5
	C0o	O	TTL	Analog comparator 0 output
B8	PC2	I/O	TTL	GPIO port C bit 2
	TDI	I	TTL	JTAG TDI
B9	PC1	I/O	TTL	GPIO port C bit 1
	TMS	I/O	TTL	JTAG TMS and SWDIO
	SWDIO	I/O	TTL	JTAG TMS and SWDIO
B10	CMOD1	I/O	TTL	CPU Mode bit 1. Input must be set to logic 0 (grounded); other encodings reserved.
B11	PE2	I/O	TTL	GPIO port E bit 2
	PhB1	I	TTL	QEI module 1 Phase B

Pin Number	Pin Name	Pin Type	Buffer Type	Description
B12	PE1	I/O	TTL	GPIO port E bit 1
	PWM5	O	TTL	PWM 5
C1	NC	-	-	No connect. Leave the pin electrically unconnected/isolated.
C2	NC	-	-	No connect. Leave the pin electrically unconnected/isolated.
C3	VDD25	-	Power	Positive supply for most of the logic function, including the processor core and most peripherals.
C4	GND	-	Power	Ground reference for logic and I/O pins.
C5	GND	-	Power	Ground reference for logic and I/O pins.
C6	VDDA	-	Power	The positive supply (3.3 V) for the analog circuits (ADC, Analog Comparators, etc.). These are separated from VDD to minimize the electrical noise contained on VDD from affecting the analog functions.
C7	VDDA	-	Power	The positive supply (3.3 V) for the analog circuits (ADC, Analog Comparators, etc.). These are separated from VDD to minimize the electrical noise contained on VDD from affecting the analog functions.
C8	GNDPHY	-	Power	GND of the Ethernet PHY
C9	GNDPHY	-	Power	GND of the Ethernet PHY
C10	VCCPHY	-	Power	VCC of the Ethernet PHY
C11	PB2	I/O	TTL	GPIO port B bit 2
	I2C0SCL	I/O	OD	I2C module 0 clock
C12	PB3	I/O	TTL	GPIO port B bit 3
	I2C0SDA	I/O	OD	I2C module 0 data
D1	NC	-	-	No connect. Leave the pin electrically unconnected/isolated.
D2	NC	-	-	No connect. Leave the pin electrically unconnected/isolated.
D3	VDD25	-	Power	Positive supply for most of the logic function, including the processor core and most peripherals.
D10	VCCPHY	-	Power	VCC of the Ethernet PHY
D11	VCCPHY	-	Power	VCC of the Ethernet PHY
D12	PB1	I/O	TTL	GPIO port B bit 1
	PWM3	O	TTL	PWM 3
E1	PD4	I/O	TTL	GPIO port D bit 4
	CCP0	I/O	TTL	Capture/Compare/PWM 0
E2	PD5	I/O	TTL	GPIO port D bit 5
E3	LDO	-	Power	Low drop-out regulator output voltage. This pin requires an external capacitor between the pin and GND of 1 µF or greater. The LDO pin must also be connected to the VDD25 pins at the board level in addition to the decoupling capacitor(s).
E10	VDD33	-	Power	Positive supply for I/O and some logic.

Pin Number	Pin Name	Pin Type	Buffer Type	Description
E11	CMOD0	I/O	TTL	CPU Mode bit 0. Input must be set to logic 0 (grounded); other encodings reserved.
E12	PB0	I/O	TTL	GPIO port B bit 0
	PWM2	O	TTL	PWM 2
F1	PD7	I/O	TTL	GPIO port D bit 7
	IDX0	I	TTL	QEI module 0 index
F2	PD6	I/O	TTL	GPIO port D bit 6
	Fault	I	TTL	PWM Fault
F3	VDD25	-	Power	Positive supply for most of the logic function, including the processor core and most peripherals.
F10	GND	-	Power	Ground reference for logic and I/O pins.
F11	GND	-	Power	Ground reference for logic and I/O pins.
F12	GND	-	Power	Ground reference for logic and I/O pins.
G1	PD0	I/O	TTL	GPIO port D bit 0
	CAN0Rx	I	TTL	CAN module 0 receive
G2	PD1	I/O	TTL	GPIO port D bit 1
	CAN0Tx	O	TTL	CAN module 0 transmit
G3	VDD25	-	Power	Positive supply for most of the logic function, including the processor core and most peripherals.
G10	VDD33	-	Power	Positive supply for I/O and some logic.
G11	VDD33	-	Power	Positive supply for I/O and some logic.
G12	VDD33	-	Power	Positive supply for I/O and some logic.
H1	PD3	I/O	TTL	GPIO port D bit 3
	U1Tx	O	TTL	UART module 1 transmit. When in IrDA mode, this signal has IrDA modulation.
H2	PD2	I/O	TTL	GPIO port D bit 2
	U1Rx	I	TTL	UART module 1 receive. When in IrDA mode, this signal has IrDA modulation.
H3	GND	-	Power	Ground reference for logic and I/O pins.
H10	VDD33	-	Power	Positive supply for I/O and some logic.
H11	$\overline{\text{RST}}$	I	TTL	System reset input.
H12	PF1	I/O	TTL	GPIO port F bit 1
	IDX1	I	TTL	QEI module 1 index
J1	XTALNPHY	O	TTL	XTALN of the Ethernet PHY
J2	XTALPPHY	I	TTL	XTALP of the Ethernet PHY
J3	GND	-	Power	Ground reference for logic and I/O pins.
J10	GND	-	Power	Ground reference for logic and I/O pins.
J11	PF2	I/O	TTL	GPIO port F bit 2
	LED1	O	TTL	MII LED 1
J12	PF3	I/O	TTL	GPIO port F bit 3
	LED0	O	TTL	MII LED 0
K1	PG0	I/O	TTL	GPIO port G bit 0

Pin Number	Pin Name	Pin Type	Buffer Type	Description
K2	PG1	I/O	TTL	GPIO port G bit 1
	PWM1	O	TTL	PWM 1
K3	ERBIAS	I	Analog	12.4 KOhm resistor (1% precision) used internally for Ethernet PHY.
K4	GNDPHY	-	Power	GND of the Ethernet PHY
K5	GND	-	Power	Ground reference for logic and I/O pins.
K6	GND	-	Power	Ground reference for logic and I/O pins.
K7	VDD33	-	Power	Positive supply for I/O and some logic.
K8	VDD33	-	Power	Positive supply for I/O and some logic.
K9	VDD33	-	Power	Positive supply for I/O and some logic.
K10	GND	-	Power	Ground reference for logic and I/O pins.
K11	XOSC0	I	Analog	Hibernation Module oscillator crystal input or an external clock reference input. Note that this is either a 4.19-MHz crystal or a 32.768-kHz oscillator for the Hibernation Module RTC. See the CLKSEL bit in the **HIBCTL** register.
K12	XOSC1	O	Analog	Hibernation Module oscillator crystal output.
L1	PC4	I/O	TTL	GPIO port C bit 4
	PhA0	I	TTL	QEI module 0 Phase A
L2	PC7	I/O	TTL	GPIO port C bit 7
L3	PA0	I/O	TTL	GPIO port A bit 0
	U0Rx	I	TTL	UART module 0 receive. When in IrDA mode, this signal has IrDA modulation.
L4	PA3	I/O	TTL	GPIO port A bit 3
	SSI0Fss	I/O	TTL	SSI module 0 frame
L5	PA4	I/O	TTL	GPIO port A bit 4
	SSI0Rx	I	TTL	SSI module 0 receive
L6	PA6	I/O	TTL	GPIO port A bit 6
	CCP1	I/O	TTL	Capture/Compare/PWM 1
L7	RXIN	I	Analog	RXIN of the Ethernet PHY
L8	TXON	O	Analog	TXON of the Ethernet PHY
L9	MDIO	I/O	TTL	MDIO of the Ethernet PHY
L10	GND	-	Power	Ground reference for logic and I/O pins.
L11	OSC0	I	Analog	Main oscillator crystal input or an external clock reference input.
L12	VBAT	-	Power	Power source for the Hibernation Module. It is normally connected to the positive terminal of a battery and serves as the battery backup/Hibernation Module power-source supply.
M1	PC5	I/O	TTL	GPIO port C bit 5
M2	PC6	I/O	TTL	GPIO port C bit 6
	PhB0	I	TTL	QEI module 0 Phase B

Pin Number	Pin Name	Pin Type	Buffer Type	Description
M3	PA1	I/O	TTL	GPIO port A bit 1
	U0Tx	O	TTL	UART module 0 transmit. When in IrDA mode, this signal has IrDA modulation.
M4	PA2	I/O	TTL	GPIO port A bit 2
	SSI0Clk	I/O	TTL	SSI module 0 clock
M5	PA5	I/O	TTL	GPIO port A bit 5
	SSI0Tx	O	TTL	SSI module 0 transmit
M6	PA7	I/O	TTL	GPIO port A bit 7
M7	RXIP	I	Analog	RXIP of the Ethernet PHY
M8	TXOP	O	Analog	TXOP of the Ethernet PHY
M9	PF0	I/O	TTL	GPIO port F bit 0
	PWM0	O	TTL	PWM 0
M10	$\overline{\text{WAKE}}$	I	-	An external input that brings the processor out of hibernate mode when asserted.
M11	OSC1	O	Analog	Main oscillator crystal output.
M12	$\overline{\text{HIB}}$	O	TTL	An output that indicates the processor is in hibernate mode.

Table 22-6. Signals by Signal Name

Pin Name	Pin Number	Pin Type	Buffer Type	Description
ADC0	B1	I	Analog	Analog-to-digital converter input 0.
ADC1	A1	I	Analog	Analog-to-digital converter input 1.
ADC2	B3	I	Analog	Analog-to-digital converter input 2.
ADC3	B2	I	Analog	Analog-to-digital converter input 3.
C0+	A7	I	Analog	Analog comparator 0 positive input
C0-	A6	I	Analog	Analog comparator 0 negative input
C0o	B7	O	TTL	Analog comparator 0 output
CAN0Rx	G1	I	TTL	CAN module 0 receive
CAN0Tx	G2	O	TTL	CAN module 0 transmit
CCP0	E1	I/O	TTL	Capture/Compare/PWM 0
CCP1	L6	I/O	TTL	Capture/Compare/PWM 1
CMOD0	E11	I/O	TTL	CPU Mode bit 0. Input must be set to logic 0 (grounded); other encodings reserved.
CMOD1	B10	I/O	TTL	CPU Mode bit 1. Input must be set to logic 0 (grounded); other encodings reserved.
ERBIAS	K3	I	Analog	12.4 KOhm resistor (1% precision) used internally for Ethernet PHY.
Fault	F2	I	TTL	PWM Fault
GND	C4	-	Power	Ground reference for logic and I/O pins.
GND	C5	-	Power	Ground reference for logic and I/O pins.
GND	H3	-	Power	Ground reference for logic and I/O pins.
GND	J3	-	Power	Ground reference for logic and I/O pins.
GND	K5	-	Power	Ground reference for logic and I/O pins.
GND	K6	-	Power	Ground reference for logic and I/O pins.

Pin Name	Pin Number	Pin Type	Buffer Type	Description
GND	L10	-	Power	Ground reference for logic and I/O pins.
GND	K10	-	Power	Ground reference for logic and I/O pins.
GND	J10	-	Power	Ground reference for logic and I/O pins.
GND	F10	-	Power	Ground reference for logic and I/O pins.
GND	F11	-	Power	Ground reference for logic and I/O pins.
GND	B6	-	Power	Ground reference for logic and I/O pins.
GND	F12	-	Power	Ground reference for logic and I/O pins.
GNDA	B5	-	Power	The ground reference for the analog circuits (ADC, Analog Comparators, etc.). These are separated from GND to minimize the electrical noise contained on VDD from affecting the analog functions.
GNDA	A5	-	Power	The ground reference for the analog circuits (ADC, Analog Comparators, etc.). These are separated from GND to minimize the electrical noise contained on VDD from affecting the analog functions.
GNDPHY	K4	-	Power	GND of the Ethernet PHY
GNDPHY	C8	-	Power	GND of the Ethernet PHY
GNDPHY	C9	-	Power	GND of the Ethernet PHY
HIB	M12	O	TTL	An output that indicates the processor is in hibernate mode.
I2C0SCL	C11	I/O	OD	I2C module 0 clock
I2C0SDA	C12	I/O	OD	I2C module 0 data
IDX0	F1	I	TTL	QEI module 0 index
IDX1	H12	I	TTL	QEI module 1 index
LDO	E3	-	Power	Low drop-out regulator output voltage. This pin requires an external capacitor between the pin and GND of 1 µF or greater. The LDO pin must also be connected to the VDD25 pins at the board level in addition to the decoupling capacitor(s).
LED0	J12	O	TTL	MII LED 0
LED1	J11	O	TTL	MII LED 1
MDIO	L9	I/O	TTL	MDIO of the Ethernet PHY
NC	A2	-	-	No connect. Leave the pin electrically unconnected/isolated.
NC	A3	-	-	No connect. Leave the pin electrically unconnected/isolated.
NC	B4	-	-	No connect. Leave the pin electrically unconnected/isolated.
NC	A4	-	-	No connect. Leave the pin electrically unconnected/isolated.
NC	D1	-	-	No connect. Leave the pin electrically unconnected/isolated.
NC	D2	-	-	No connect. Leave the pin electrically unconnected/isolated.
NC	C2	-	-	No connect. Leave the pin electrically unconnected/isolated.

Pin Name	Pin Number	Pin Type	Buffer Type	Description
NC	C1	-	-	No connect. Leave the pin electrically unconnected/isolated.
OSC0	L11	I	Analog	Main oscillator crystal input or an external clock reference input.
OSC1	M11	O	Analog	Main oscillator crystal output.
PA0	L3	I/O	TTL	GPIO port A bit 0
PA1	M3	I/O	TTL	GPIO port A bit 1
PA2	M4	I/O	TTL	GPIO port A bit 2
PA3	L4	I/O	TTL	GPIO port A bit 3
PA4	L5	I/O	TTL	GPIO port A bit 4
PA5	M5	I/O	TTL	GPIO port A bit 5
PA6	L6	I/O	TTL	GPIO port A bit 6
PA7	M6	I/O	TTL	GPIO port A bit 7
PB0	E12	I/O	TTL	GPIO port B bit 0
PB1	D12	I/O	TTL	GPIO port B bit 1
PB2	C11	I/O	TTL	GPIO port B bit 2
PB3	C12	I/O	TTL	GPIO port B bit 3
PB4	A6	I/O	TTL	GPIO port B bit 4
PB5	B7	I/O	TTL	GPIO port B bit 5
PB6	A7	I/O	TTL	GPIO port B bit 6
PB7	A8	I/O	TTL	GPIO port B bit 7
PC0	A9	I/O	TTL	GPIO port C bit 0
PC1	B9	I/O	TTL	GPIO port C bit 1
PC2	B8	I/O	TTL	GPIO port C bit 2
PC3	A10	I/O	TTL	GPIO port C bit 3
PC4	L1	I/O	TTL	GPIO port C bit 4
PC5	M1	I/O	TTL	GPIO port C bit 5
PC6	M2	I/O	TTL	GPIO port C bit 6
PC7	L2	I/O	TTL	GPIO port C bit 7
PD0	G1	I/O	TTL	GPIO port D bit 0
PD1	G2	I/O	TTL	GPIO port D bit 1
PD2	H2	I/O	TTL	GPIO port D bit 2
PD3	H1	I/O	TTL	GPIO port D bit 3
PD4	E1	I/O	TTL	GPIO port D bit 4
PD5	E2	I/O	TTL	GPIO port D bit 5
PD6	F2	I/O	TTL	GPIO port D bit 6
PD7	F1	I/O	TTL	GPIO port D bit 7
PE0	A11	I/O	TTL	GPIO port E bit 0
PE1	B12	I/O	TTL	GPIO port E bit 1
PE2	B11	I/O	TTL	GPIO port E bit 2
PE3	A12	I/O	TTL	GPIO port E bit 3
PF0	M9	I/O	TTL	GPIO port F bit 0
PF1	H12	I/O	TTL	GPIO port F bit 1

Pin Name	Pin Number	Pin Type	Buffer Type	Description
PF2	J11	I/O	TTL	GPIO port F bit 2
PF3	J12	I/O	TTL	GPIO port F bit 3
PG0	K1	I/O	TTL	GPIO port G bit 0
PG1	K2	I/O	TTL	GPIO port G bit 1
PhA0	L1	I	TTL	QEI module 0 Phase A
PhA1	A12	I	TTL	QEI module 1 Phase A
PhB0	M2	I	TTL	QEI module 0 Phase B
PhB1	B11	I	TTL	QEI module 1 Phase B
PWM0	M9	O	TTL	PWM 0
PWM1	K2	O	TTL	PWM 1
PWM2	E12	O	TTL	PWM 2
PWM3	D12	O	TTL	PWM 3
PWM4	A11	O	TTL	PWM 4
PWM5	B12	O	TTL	PWM 5
$\overline{\text{RST}}$	H11	I	TTL	System reset input.
RXIN	L7	I	Analog	RXIN of the Ethernet PHY
RXIP	M7	I	Analog	RXIP of the Ethernet PHY
SSI0Clk	M4	I/O	TTL	SSI module 0 clock
SSI0Fss	L4	I/O	TTL	SSI module 0 frame
SSI0Rx	L5	I	TTL	SSI module 0 receive
SSI0Tx	M5	O	TTL	SSI module 0 transmit
SWCLK	A9	I	TTL	JTAG/SWD CLK
SWDIO	B9	I/O	TTL	JTAG TMS and SWDIO
SWO	A10	O	TTL	JTAG TDO and SWO
TCK	A9	I	TTL	JTAG/SWD CLK
TDI	B8	I	TTL	JTAG TDI
TDO	A10	O	TTL	JTAG TDO and SWO
TMS	B9	I/O	TTL	JTAG TMS and SWDIO
$\overline{\text{TRST}}$	A8	I	TTL	JTAG TRSTn
TXON	L8	O	Analog	TXON of the Ethernet PHY
TXOP	M8	O	Analog	TXOP of the Ethernet PHY
U0Rx	L3	I	TTL	UART module 0 receive. When in IrDA mode, this signal has IrDA modulation.
U0Tx	M3	O	TTL	UART module 0 transmit. When in IrDA mode, this signal has IrDA modulation.
U1Rx	H2	I	TTL	UART module 1 receive. When in IrDA mode, this signal has IrDA modulation.
U1Tx	H1	O	TTL	UART module 1 transmit. When in IrDA mode, this signal has IrDA modulation.
VBAT	L12	-	Power	Power source for the Hibernation Module. It is normally connected to the positive terminal of a battery and serves as the battery backup/Hibernation Module power-source supply.
VCCPHY	C10	-	Power	VCC of the Ethernet PHY

Pin Name	Pin Number	Pin Type	Buffer Type	Description
VCCPHY	D10	-	Power	VCC of the Ethernet PHY
VCCPHY	D11	-	Power	VCC of the Ethernet PHY
VDD25	C3	-	Power	Positive supply for most of the logic function, including the processor core and most peripherals.
VDD25	D3	-	Power	Positive supply for most of the logic function, including the processor core and most peripherals.
VDD25	F3	-	Power	Positive supply for most of the logic function, including the processor core and most peripherals.
VDD25	G3	-	Power	Positive supply for most of the logic function, including the processor core and most peripherals.
VDD33	K7	-	Power	Positive supply for I/O and some logic.
VDD33	G12	-	Power	Positive supply for I/O and some logic.
VDD33	K8	-	Power	Positive supply for I/O and some logic.
VDD33	K9	-	Power	Positive supply for I/O and some logic.
VDD33	H10	-	Power	Positive supply for I/O and some logic.
VDD33	G10	-	Power	Positive supply for I/O and some logic.
VDD33	E10	-	Power	Positive supply for I/O and some logic.
VDD33	G11	-	Power	Positive supply for I/O and some logic.
VDDA	C6	-	Power	The positive supply (3.3 V) for the analog circuits (ADC, Analog Comparators, etc.). These are separated from VDD to minimize the electrical noise contained on VDD from affecting the analog functions.
VDDA	C7	-	Power	The positive supply (3.3 V) for the analog circuits (ADC, Analog Comparators, etc.). These are separated from VDD to minimize the electrical noise contained on VDD from affecting the analog functions.
WAKE	M10	I	-	An external input that brings the processor out of hibernate mode when asserted.
XOSC0	K11	I	Analog	Hibernation Module oscillator crystal input or an external clock reference input. Note that this is either a 4.19-MHz crystal or a 32.768-kHz oscillator for the Hibernation Module RTC. See the CLKSEL bit in the **HIBCTL** register.
XOSC1	K12	O	Analog	Hibernation Module oscillator crystal output.
XTALNPHY	J1	O	TTL	XTALN of the Ethernet PHY
XTALPPHY	J2	I	TTL	XTALP of the Ethernet PHY

Table 22-7. Signals by Function, Except for GPIO

Function	Pin Name	Pin Number	Pin Type	Buffer Type	Description
ADC	ADC0	B1	I	Analog	Analog-to-digital converter input 0.
	ADC1	A1	I	Analog	Analog-to-digital converter input 1.
	ADC2	B3	I	Analog	Analog-to-digital converter input 2.

Function	Pin Name	Pin Number	Pin Type	Buffer Type	Description
	ADC3	B2	I	Analog	Analog-to-digital converter input 3.
Analog Comparators	C0+	A7	I	Analog	Analog comparator 0 positive input
	C0-	A6	I	Analog	Analog comparator 0 negative input
	C0o	B7	O	TTL	Analog comparator 0 output
Controller Area Network	CAN0Rx	G1	I	TTL	CAN module 0 receive
	CAN0Tx	G2	O	TTL	CAN module 0 transmit
Ethernet PHY	ERBIAS	K3	I	Analog	12.4 KOhm resistor (1% precision) used internally for Ethernet PHY.
	GNDPHY	K4	-	Power	GND of the Ethernet PHY
	GNDPHY	C8	-	Power	GND of the Ethernet PHY
	GNDPHY	C9	-	Power	GND of the Ethernet PHY
	LED0	J12	O	TTL	MII LED 0
	LED1	J11	O	TTL	MII LED 1
	MDIO	L9	I/O	TTL	MDIO of the Ethernet PHY
	RXIN	L7	I	Analog	RXIN of the Ethernet PHY
	RXIP	M7	I	Analog	RXIP of the Ethernet PHY
	TXON	L8	O	Analog	TXON of the Ethernet PHY
	TXOP	M8	O	Analog	TXOP of the Ethernet PHY
	VCCPHY	C10	-	Power	VCC of the Ethernet PHY
	VCCPHY	D10	-	Power	VCC of the Ethernet PHY
	VCCPHY	D11	-	Power	VCC of the Ethernet PHY
	XTALNPHY	J1	O	TTL	XTALN of the Ethernet PHY
	XTALPPHY	J2	I	TTL	XTALP of the Ethernet PHY
General-Purpose Timers	CCP0	E1	I/O	TTL	Capture/Compare/PWM 0
	CCP1	L6	I/O	TTL	Capture/Compare/PWM 1
I2C	I2C0SCL	C11	I/O	OD	I2C module 0 clock
	I2C0SDA	C12	I/O	OD	I2C module 0 data
JTAG/SWD/SWO	SWCLK	A9	I	TTL	JTAG/SWD CLK
	SWDIO	B9	I/O	TTL	JTAG TMS and SWDIO
	SWO	A10	O	TTL	JTAG TDO and SWO
	TCK	A9	I	TTL	JTAG/SWD CLK
	TDI	B8	I	TTL	JTAG TDI
	TDO	A10	O	TTL	JTAG TDO and SWO
	TMS	B9	I/O	TTL	JTAG TMS and SWDIO
PWM	Fault	F2	I	TTL	PWM Fault
	PWM0	M9	O	TTL	PWM 0
	PWM1	K2	O	TTL	PWM 1
	PWM2	E12	O	TTL	PWM 2
	PWM3	D12	O	TTL	PWM 3
	PWM4	A11	O	TTL	PWM 4
	PWM5	B12	O	TTL	PWM 5
Power	GND	C4	-	Power	Ground reference for logic and I/O pins.

Function	Pin Name	Pin Number	Pin Type	Buffer Type	Description
	GND	C5	-	Power	Ground reference for logic and I/O pins.
	GND	H3	-	Power	Ground reference for logic and I/O pins.
	GND	J3	-	Power	Ground reference for logic and I/O pins.
	GND	K5	-	Power	Ground reference for logic and I/O pins.
	GND	K6	-	Power	Ground reference for logic and I/O pins.
	GND	L10	-	Power	Ground reference for logic and I/O pins.
	GND	K10	-	Power	Ground reference for logic and I/O pins.
	GND	J10	-	Power	Ground reference for logic and I/O pins.
	GND	F10	-	Power	Ground reference for logic and I/O pins.
	GND	F11	-	Power	Ground reference for logic and I/O pins.
	GND	B6	-	Power	Ground reference for logic and I/O pins.
	GND	F12	-	Power	Ground reference for logic and I/O pins.
	GNDA	B5	-	Power	The ground reference for the analog circuits (ADC, Analog Comparators, etc.). These are separated from GND to minimize the electrical noise contained on VDD from affecting the analog functions.
	GNDA	A5	-	Power	The ground reference for the analog circuits (ADC, Analog Comparators, etc.). These are separated from GND to minimize the electrical noise contained on VDD from affecting the analog functions.
	HIB	M12	O	TTL	An output that indicates the processor is in hibernate mode.
	LDO	E3	-	Power	Low drop-out regulator output voltage. This pin requires an external capacitor between the pin and GND of 1 µF or greater. The LDO pin must also be connected to the VDD25 pins at the board level in addition to the decoupling capacitor(s).
	VBAT	L12	-	Power	Power source for the Hibernation Module. It is normally connected to the positive terminal of a battery and serves as the battery backup/Hibernation Module power-source supply.
	VDD25	C3	-	Power	Positive supply for most of the logic function, including the processor core and most peripherals.
	VDD25	D3	-	Power	Positive supply for most of the logic function, including the processor core and most peripherals.
	VDD25	F3	-	Power	Positive supply for most of the logic function, including the processor core and most peripherals.
	VDD25	G3	-	Power	Positive supply for most of the logic function, including the processor core and most peripherals.
	VDD33	K7	-	Power	Positive supply for I/O and some logic.
	VDD33	G12	-	Power	Positive supply for I/O and some logic.
	VDD33	K8	-	Power	Positive supply for I/O and some logic.
	VDD33	K9	-	Power	Positive supply for I/O and some logic.
	VDD33	H10	-	Power	Positive supply for I/O and some logic.
	VDD33	G10	-	Power	Positive supply for I/O and some logic.
	VDD33	E10	-	Power	Positive supply for I/O and some logic.
	VDD33	G11	-	Power	Positive supply for I/O and some logic.

Function	Pin Name	Pin Number	Pin Type	Buffer Type	Description
	VDDA	C6	-	Power	The positive supply (3.3 V) for the analog circuits (ADC, Analog Comparators, etc.). These are separated from VDD to minimize the electrical noise contained on VDD from affecting the analog functions.
	VDDA	C7	-	Power	The positive supply (3.3 V) for the analog circuits (ADC, Analog Comparators, etc.). These are separated from VDD to minimize the electrical noise contained on VDD from affecting the analog functions.
	$\overline{\text{WAKE}}$	M10	I	-	An external input that brings the processor out of hibernate mode when asserted.
QEI	IDX0	F1	I	TTL	QEI module 0 index
	IDX1	H12	I	TTL	QEI module 1 index
	PhA0	L1	I	TTL	QEI module 0 Phase A
	PhA1	A12	I	TTL	QEI module 1 Phase A
	PhB0	M2	I	TTL	QEI module 0 Phase B
	PhB1	B11	I	TTL	QEI module 1 Phase B
SSI	SSI0Clk	M4	I/O	TTL	SSI module 0 clock
	SSI0Fss	L4	I/O	TTL	SSI module 0 frame
	SSI0Rx	L5	I	TTL	SSI module 0 receive
	SSI0Tx	M5	O	TTL	SSI module 0 transmit
System Control & Clocks	CMOD0	E11	I/O	TTL	CPU Mode bit 0. Input must be set to logic 0 (grounded); other encodings reserved.
	CMOD1	B10	I/O	TTL	CPU Mode bit 1. Input must be set to logic 0 (grounded); other encodings reserved.
	OSC0	L11	I	Analog	Main oscillator crystal input or an external clock reference input.
	OSC1	M11	O	Analog	Main oscillator crystal output.
	$\overline{\text{RST}}$	H11	I	TTL	System reset input.
	$\overline{\text{TRST}}$	A8	I	TTL	JTAG TRSTn
	XOSC0	K11	I	Analog	Hibernation Module oscillator crystal input or an external clock reference input. Note that this is either a 4.19-MHz crystal or a 32.768-kHz oscillator for the Hibernation Module RTC. See the CLKSEL bit in the **HIBCTL** register.
	XOSC1	K12	O	Analog	Hibernation Module oscillator crystal output.
UART	U0Rx	L3	I	TTL	UART module 0 receive. When in IrDA mode, this signal has IrDA modulation.
	U0Tx	M3	O	TTL	UART module 0 transmit. When in IrDA mode, this signal has IrDA modulation.
	U1Rx	H2	I	TTL	UART module 1 receive. When in IrDA mode, this signal has IrDA modulation.
	U1Tx	H1	O	TTL	UART module 1 transmit. When in IrDA mode, this signal has IrDA modulation.

Table 22-8. GPIO Pins and Alternate Functions

GPIO Pin	Pin Number	Multiplexed Function	Multiplexed Function
PA0	L3	U0Rx	
PA1	M3	U0Tx	
PA2	M4	SSI0Clk	
PA3	L4	SSI0Fss	
PA4	L5	SSI0Rx	
PA5	M5	SSI0Tx	
PA6	L6	CCP1	
PA7	M6		
PB0	E12	PWM2	
PB1	D12	PWM3	
PB2	C11	I2C0SCL	
PB3	C12	I2C0SDA	
PB4	A6	C0-	
PB5	B7	C0o	
PB6	A7	C0+	
PB7	A8	TRST	
PC0	A9	TCK	SWCLK
PC1	B9	TMS	SWDIO
PC2	B8	TDI	
PC3	A10	TDO	SWO
PC4	L1	PhA0	
PC5	M1		
PC6	M2	PhB0	
PC7	L2		
PD0	G1	CAN0Rx	
PD1	G2	CAN0Tx	
PD2	H2	U1Rx	
PD3	H1	U1Tx	
PD4	E1	CCP0	
PD5	E2		
PD6	F2	Fault	
PD7	F1	IDX0	
PE0	A11	PWM4	
PE1	B12	PWM5	
PE2	B11	PhB1	
PE3	A12	PhA1	
PF0	M9	PWM0	
PF1	H12	IDX1	
PF2	J11	LED1	
PF3	J12	LED0	
PG0	K1		

GPIO Pin	Pin Number	Multiplexed Function	Multiplexed Function
PG1	K2	PWM1	

23 Operating Characteristics

Table 23-1. Temperature Characteristics

Characteristic[a]	Symbol	Value	Unit
Industrial operating temperature range	T_A	-40 to +85	°C
Extended operating temperature range	T_A	-40 to +105	°C

a. Maximum storage temperature is 150°C.

Table 23-2. Thermal Characteristics

Characteristic	Symbol	Value	Unit
Thermal resistance (junction to ambient)[a]	Θ_{JA}	34	°C/W
Average junction temperature[b]	T_J	$T_A + (P_{AVG} \cdot \Theta_{JA})$	°C

a. Junction to ambient thermal resistance θ_{JA} numbers are determined by a package simulator.

b. Power dissipation is a function of temperature.

24 Electrical Characteristics

24.1 DC Characteristics

24.1.1 Maximum Ratings

The maximum ratings are the limits to which the device can be subjected without permanently damaging the device.

Note: The device is not guaranteed to operate properly at the maximum ratings.

Table 24-1. Maximum Ratings

Characteristic [a]	Symbol	Value		Unit
		Min	Max	
I/O supply voltage (V_{DD})	V_{DD}	0	4	V
Core supply voltage (V_{DD25})	V_{DD25}	0	3	V
Analog supply voltage (V_{DDA})	V_{DDA}	0	4	V
Battery supply voltage (V_{BAT})	V_{BAT}	0	4	V
Ethernet PHY supply voltage (V_{CCPHY})	V_{CCPHY}	0	4	V
Input voltage	V_{IN}	-0.3	5.5	V
Maximum current per output pins	I	-	25	mA

a. Voltages are measured with respect to GND.

Important: This device contains circuitry to protect the inputs against damage due to high-static voltages or electric fields; however, it is advised that normal precautions be taken to avoid application of any voltage higher than maximum-rated voltages to this high-impedance circuit. Reliability of operation is enhanced if unused inputs are connected to an appropriate logic voltage level (for example, either GND or V_{DD}).

24.1.2 Recommended DC Operating Conditions

For special high-current applications, the GPIO output buffers may be used with the following restrictions. With the GPIO pins configured as 8-mA output drivers, a total of four GPIO outputs may be used to sink current loads up to 18 mA each. At 18-mA sink current loading, the V_{OL} value is specified as 1.2 V. The high-current GPIO package pins must be selected such that there are only a maximum of two per side of the physical package or BGA pin group with the total number of high-current GPIO outputs not exceeding four for the entire package.

Table 24-2. Recommended DC Operating Conditions

Parameter	Parameter Name	Min	Nom	Max	Unit
V_{DD}	I/O supply voltage	3.0	3.3	3.6	V
V_{DD25}	Core supply voltage	2.25	2.5	2.75	V
V_{DDA}	Analog supply voltage	3.0	3.3	3.6	V
V_{BAT}	Battery supply voltage	2.3	3.0	3.6	V
V_{CCPHY}	Ethernet PHY supply voltage	3.0	3.3	3.6	V
V_{IH}	High-level input voltage	2.0	-	5.0	V
V_{IL}	Low-level input voltage	-0.3	-	1.3	V

Parameter	Parameter Name	Min	Nom	Max	Unit
V_{SIH}	High-level input voltage for Schmitt trigger inputs	0.8 * V_{DD}	-	V_{DD}	V
V_{SIL}	Low-level input voltage for Schmitt trigger inputs	0	-	0.2 * V_{DD}	V
V_{OH}[a]	High-level output voltage	2.4	-	-	V
V_{OL}[a]	Low-level output voltage	-	-	0.4	V
I_{OH}	High-level source current, V_{OH}=2.4 V				
	2-mA Drive	2.0	-	-	mA
	4-mA Drive	4.0	-	-	mA
	8-mA Drive	8.0	-	-	mA
I_{OL}	Low-level sink current, V_{OL}=0.4 V				
	2-mA Drive	2.0	-	-	mA
	4-mA Drive	4.0	-	-	mA
	8-mA Drive	8.0	-	-	mA

a. V_{OL} and V_{OH} shift to 1.2 V when using high-current GPIOs.

24.1.3 On-Chip Low Drop-Out (LDO) Regulator Characteristics

Table 24-3. LDO Regulator Characteristics

Parameter	Parameter Name	Min	Nom	Max	Unit
V_{LDOOUT}	Programmable internal (logic) power supply output value	2.25	2.5	2.75	V
	Output voltage accuracy	-	2%	-	%
t_{PON}	Power-on time	-	-	100	µs
t_{ON}	Time on	-	-	200	µs
t_{OFF}	Time off	-	-	100	µs
V_{STEP}	Step programming incremental voltage	-	50	-	mV
C_{LDO}	External filter capacitor size for internal power supply	1.0	-	3.0	µF

24.1.4 GPIO Module Characteristics

Table 24-4. GPIO Module DC Characteristics

Parameter	Parameter Name	Min	Nom	Max	Unit
R_{GPIOPU}	GPIO internal pull-up resistor	50	-	110	kΩ
R_{GPIOPD}	GPIO internal pull-down resistor	55	-	180	kΩ

24.1.5 Power Specifications

The power measurements specified in the tables that follow are run on the core processor using SRAM with the following specifications (except as noted):

- V_{DD} = 3.3 V
- V_{DD25} = 2.50 V
- V_{BAT} = 3.0 V
- V_{DDA} = 3.3 V

- V_{DDPHY} = 3.3 V
- Temperature = 25°C
- Clock Source (MOSC) =3.579545 MHz Crystal Oscillator
- Main oscillator (MOSC) = enabled
- Internal oscillator (IOSC) = disabled

Table 24-5. Detailed Power Specifications

Parameter	Parameter Name	Conditions	3.3 V V_{DD}, V_{DDA}, V_{DDPHY}		2.5 V V_{DD25}		3.0 V V_{BAT}		Unit
			Nom	Max	Nom	Max	Nom	Max	
I_{DD_RUN}	Run mode 1 (Flash loop)	V_{DD25} = 2.50 V Code= while(1){} executed in Flash Peripherals = All ON System Clock = 50 MHz (with PLL)	48	pending[a]	108	pending[a]	0	pending[a]	mA
	Run mode 2 (Flash loop)	V_{DD25} = 2.50 V Code= while(1){} executed in Flash Peripherals = All OFF System Clock = 50 MHz (with PLL)	5	pending[a]	52	pending[a]	0	pending[a]	mA
	Run mode 1 (SRAM loop)	V_{DD25} = 2.50 V Code= while(1){} executed in SRAM Peripherals = All ON System Clock = 50 MHz (with PLL)	48	pending[a]	100	pending[a]	0	pending[a]	mA
	Run mode 2 (SRAM loop)	V_{DD25} = 2.50 V Code= while(1){} executed in SRAM Peripherals = All OFF System Clock = 50 MHz (with PLL)	5	pending[a]	45	pending[a]	0	pending[a]	mA
I_{DD_SLEEP}	Sleep mode	V_{DD25} = 2.50 V Peripherals = All OFF System Clock = 50 MHz (with PLL)	5	pending[a]	16	pending[a]	0	pending[a]	mA
$I_{DD_DEEPSLEEP}$	Deep-Sleep mode	LDO = 2.25 V Peripherals = All OFF System Clock = IOSC30KHZ/64	4.6	pending[a]	0.21	pending[a]	0	pending[a]	mA

Parameter	Parameter Name	Conditions	3.3 V V_{DD}, V_{DDA}, V_{DDPHY}		2.5 V V_{DD25}		3.0 V V_{BAT}		Unit
			Nom	Max	Nom	Max	Nom	Max	
$I_{DD_HIBERNATE}$	Hibernate mode	V_{BAT} = 3.0 V V_{DD} = 0 V V_{DD25} = 0 V V_{DDA} = 0 V V_{DDPHY} = 0 V Peripherals = All OFF System Clock = OFF Hibernate Module = 32 kHz	0	0	0	0	16	pending[a]	µA

a. Pending characterization completion.

24.1.6 Flash Memory Characteristics

Table 24-6. Flash Memory Characteristics

Parameter	Parameter Name	Min	Nom	Max	Unit
PE_{CYC}	Number of guaranteed program/erase cycles before failure[a]	10,000	100,000	-	cycles
T_{RET}	Data retention at average operating temperature of 85˚C (industrial) or 105˚C (extended)	10	-	-	years
T_{PROG}	Word program time	20	-	-	µs
T_{ERASE}	Page erase time	20	-	-	ms
T_{ME}	Mass erase time	200	-	-	ms

a. A program/erase cycle is defined as switching the bits from 1-> 0 -> 1.

24.1.7 Hibernation

Table 24-7. Hibernation Module DC Characteristics

Parameter	Parameter Name	Value	Unit
V_{LOWBAT}	Low battery detect voltage	2.35	V
R_{WAKEPU}	$\overline{WAKE}$ internal pull-up resistor	200	kΩ

24.2 AC Characteristics

24.2.1 Load Conditions

Unless otherwise specified, the following conditions are true for all timing measurements. Timing measurements are for 4-mA drive strength.

Figure 24-1. Load Conditions

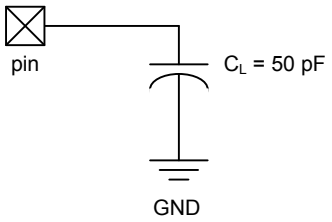

24.2.2 Clocks

Table 24-8. Phase Locked Loop (PLL) Characteristics

Parameter	Parameter Name	Min	Nom	Max	Unit
$f_{ref_crystal}$	Crystal reference[a]	3.579545	-	8.192	MHz
f_{ref_ext}	External clock reference[a]	3.579545	-	8.192	MHz
f_{pll}	PLL frequency[b]	-	400	-	MHz
T_{READY}	PLL lock time	-	-	0.5	ms

a. The exact value is determined by the crystal value programmed into the XTAL field of the **Run-Mode Clock Configuration (RCC)** register.

b. PLL frequency is automatically calculated by the hardware based on the XTAL field of the **RCC** register.

Table 24-9. Clock Characteristics

Parameter	Parameter Name	Min	Nom	Max	Unit
f_{IOSC}	Internal 12 MHz oscillator frequency	8.4	12	15.6	MHz
$f_{IOSC30KHZ}$	Internal 30 KHz oscillator frequency	15	30	45	KHz
f_{XOSC}	Hibernation module oscillator frequency	-	4.194304	-	MHz
f_{XOSC_XTAL}	Crystal reference for hibernation oscillator	-	4.194304	-	MHz
f_{XOSC_EXT}	External clock reference for hibernation module	-	32.768	-	KHz
f_{MOSC}	Main oscillator frequency	1	-	8.192	MHz
t_{MOSC_per}	Main oscillator period	125	-	1000	ns
$f_{ref_crystal_bypass}$	Crystal reference using the main oscillator (PLL in BYPASS mode)[a]	1	-	8.192	MHz
$f_{ref_ext_bypass}$	External clock reference (PLL in BYPASS mode)[a]	0	-	50	MHz
f_{system_clock}	System clock	0	-	50	MHz

a. The ADC must be clocked from the PLL or directly from a 14-MHz to 18-MHz clock source to operate properly.

Table 24-10. Crystal Characteristics

Parameter Name	Value				Units
Frequency	8	6	4	3.5	MHz
Frequency tolerance	±50	±50	±50	±50	ppm
Aging	±5	±5	±5	±5	ppm/yr
Oscillation mode	Parallel	Parallel	Parallel	Parallel	-
Temperature stability (-40°C to 85°C)	±25	±25	±25	±25	ppm
Temperature stability (-40°C to 105°C)	±25	±25	±25	±25	ppm
Motional capacitance (typ)	27.8	37.0	55.6	63.5	pF

Parameter Name	Value				Units
Motional inductance (typ)	14.3	19.1	28.6	32.7	mH
Equivalent series resistance (max)	120	160	200	220	Ω
Shunt capacitance (max)	10	10	10	10	pF
Load capacitance (typ)	16	16	16	16	pF
Drive level (typ)	100	100	100	100	µW

24.2.3 JTAG and Boundary Scan

Table 24-11. JTAG Characteristics

Parameter No.	Parameter	Parameter Name	Min	Nom	Max	Unit
J1	f_{TCK}	TCK operational clock frequency	0	-	10	MHz
J2	t_{TCK}	TCK operational clock period	100	-	-	ns
J3	t_{TCK_LOW}	TCK clock Low time	-	t_{TCK}	-	ns
J4	t_{TCK_HIGH}	TCK clock High time	-	t_{TCK}	-	ns
J5	t_{TCK_R}	TCK rise time	0	-	10	ns
J6	t_{TCK_F}	TCK fall time	0	-	10	ns
J7	t_{TMS_SU}	TMS setup time to TCK rise	20	-	-	ns
J8	t_{TMS_HLD}	TMS hold time from TCK rise	20	-	-	ns
J9	t_{TDI_SU}	TDI setup time to TCK rise	25	-	-	ns
J10	t_{TDI_HLD}	TDI hold time from TCK rise	25	-	-	ns
J11 t_{TDO_ZDV}	TCK fall to Data Valid from High-Z	2-mA drive	-	23	35	ns
		4-mA drive		15	26	ns
		8-mA drive		14	25	ns
		8-mA drive with slew rate control		18	29	ns
J12 t_{TDO_DV}	TCK fall to Data Valid from Data Valid	2-mA drive	-	21	35	ns
		4-mA drive		14	25	ns
		8-mA drive		13	24	ns
		8-mA drive with slew rate control		18	28	ns
J13 t_{TDO_DVZ}	TCK fall to High-Z from Data Valid	2-mA drive	-	9	11	ns
		4-mA drive		7	9	ns
		8-mA drive		6	8	ns
		8-mA drive with slew rate control		7	9	ns
J14	t_{TRST}	$\overline{TRST}$ assertion time	100	-	-	ns
J15	t_{TRST_SU}	$\overline{TRST}$ setup time to TCK rise	10	-	-	ns

Figure 24-2. JTAG Test Clock Input Timing

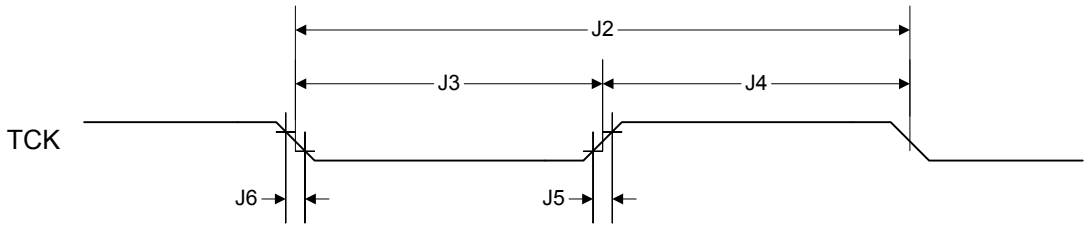

Figure 24-3. JTAG Test Access Port (TAP) Timing

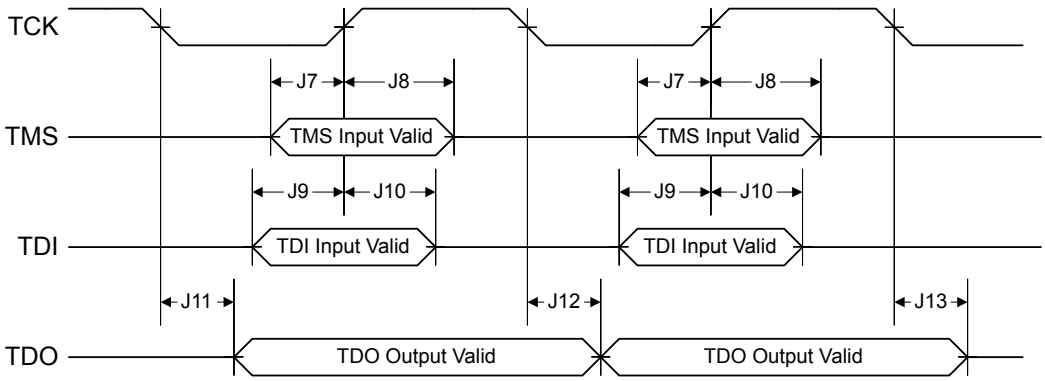

Figure 24-4. JTAG TRST Timing

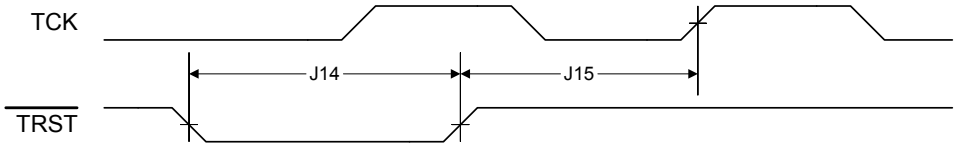

24.2.4 Reset

Table 24-12. Reset Characteristics

Parameter No.	Parameter	Parameter Name	Min	Nom	Max	Unit
R1	V_{TH}	Reset threshold	-	2.0	-	V
R2	V_{BTH}	Brown-Out threshold	2.85	2.9	2.95	V
R3	T_{POR}	Power-On Reset timeout	-	10	-	ms
R4	T_{BOR}	Brown-Out timeout	-	500	-	µs
R5	T_{IRPOR}	Internal reset timeout after POR	6	-	11	ms
R6	T_{IRBOR}	Internal reset timeout after BOR[a]	0	-	1	µs

Parameter No.	Parameter	Parameter Name	Min	Nom	Max	Unit
R7	T_{IRHWR}	Internal reset timeout after hardware reset ($\overline{RST}$ pin)	0	-	1	ms
R8	T_{IRSWR}	Internal reset timeout after software-initiated system reset [a]	2.5	-	20	µs
R9	T_{IRWDR}	Internal reset timeout after watchdog reset[a]	2.5	-	20	µs
R10	$T_{VDDRISE}$	Supply voltage (V_{DD}) rise time (0V-3.3V)	-	-	250	ms
R11	T_{MIN}	Minimum $\overline{RST}$ pulse width	2	-	-	µs

a. 20 * t_{MOSC_per}

Figure 24-5. External Reset Timing ($\overline{RST}$)

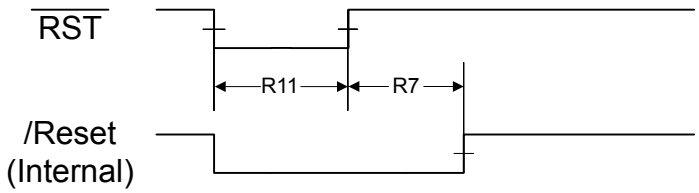

Figure 24-6. Power-On Reset Timing

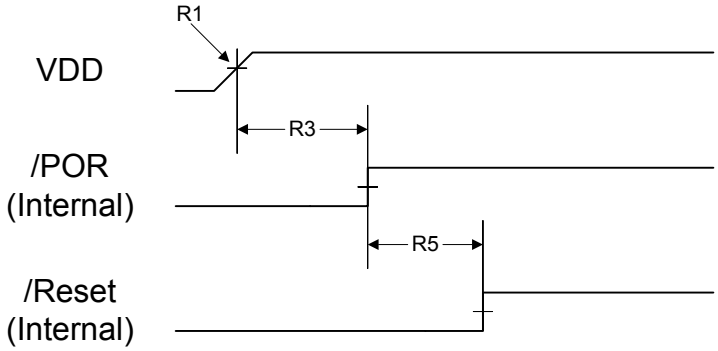

Figure 24-7. Brown-Out Reset Timing

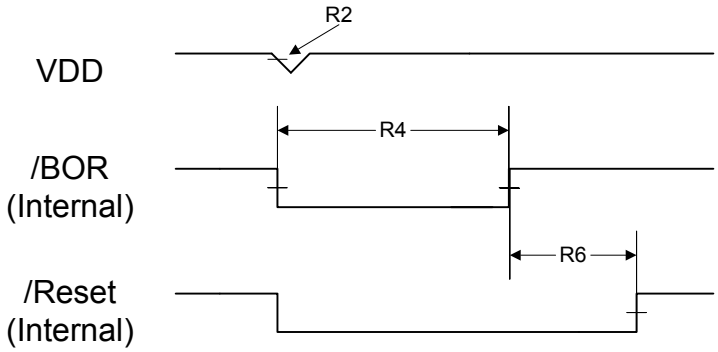

Figure 24-8. Software Reset Timing

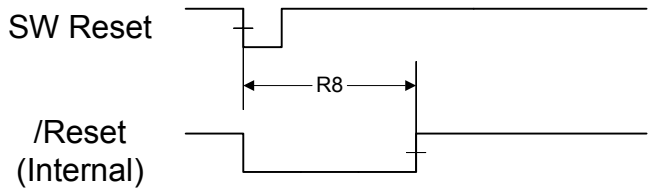

Figure 24-9. Watchdog Reset Timing

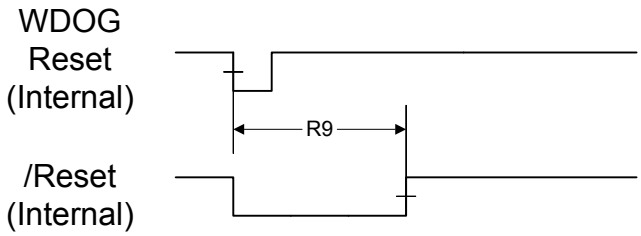

24.2.5 Hibernation Module

The Hibernation Module requires special system implementation considerations since it is intended to power-down all other sections of its host device. The system power-supply distribution and interfaces to the device must be driven to 0 V_{DC} or powered down with the same external voltage regulator controlled by $\overline{HIB}$.

The external voltage regulators controlled by $\overline{HIB}$ must have a settling time of 250 µs or less.

Table 24-13. Hibernation Module AC Characteristics

Parameter No	Parameter	Parameter Name	Min	Nom	Max	Unit
H1	t_{HIB_LOW}	Internal 32.768 KHz clock reference rising edge to /HIB asserted	-	200	-	µs
H2	t_{HIB_HIGH}	Internal 32.768 KHz clock reference rising edge to /HIB deasserted	-	30	-	µs
H3	t_{WAKE_ASSERT}	/WAKE assertion time	62	-	-	µs
H4	$t_{WAKETOHIB}$	/WAKE assert to /HIB desassert	62	-	124	µs
H5	t_{XOSC_SETTLE}	XOSC settling time[a]	20	-	-	ms
H6	$t_{HIB_REG_WRITE}$	Time for a write to non-volatile registers in HIB module to complete	92	-	-	µs
H7	$t_{HIB_TO_VDD}$	$\overline{HIB}$ deassert to VDD and VDD25 at minimum operational level	-	-	250	µs

a. This parameter is highly sensitive to PCB layout and trace lengths, which may make this parameter time longer. Care must be taken in PCB design to minimize trace lengths and RLC (resistance, inductance, capacitance).

Figure 24-10. Hibernation Module Timing

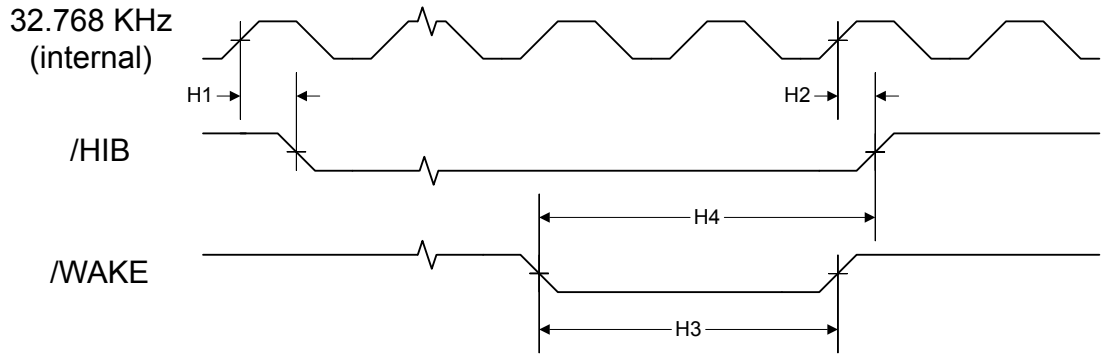

24.2.6 General-Purpose I/O (GPIO)

Note: All GPIOs are 5 V-tolerant.

Table 24-14. GPIO Characteristics

Parameter	Parameter Name	Condition	Min	Nom	Max	Unit
t_{GPIOR}	GPIO Rise Time (from 20% to 80% of V_{DD})	2-mA drive	-	17	26	ns
		4-mA drive		9	13	ns
		8-mA drive		6	9	ns
		8-mA drive with slew rate control		10	12	ns
t_{GPIOF}	GPIO Fall Time (from 80% to 20% of V_{DD})	2-mA drive	-	17	25	ns
		4-mA drive		8	12	ns
		8-mA drive		6	10	ns
		8-mA drive with slew rate control		11	13	ns

24.2.7 Analog-to-Digital Converter

Table 24-15. ADC Characteristics[a]

Parameter	Parameter Name	Min	Nom	Max	Unit
V_{ADCIN}	Maximum single-ended, full-scale analog input voltage	-	-	3.0	V
	Minimum single-ended, full-scale analog input voltage	-	-	0	V
	Maximum differential, full-scale analog input voltage	-	-	1.5	V
	Minimum differential, full-scale analog input voltage	-	-	-1.5	V
C_{ADCIN}	Equivalent input capacitance	-	1	-	pF
N	Resolution	-	10	-	bits
f_{ADC}	ADC internal clock frequency	7	8	9	MHz
$t_{ADCCONV}$	Conversion time	-	-	16	t_{ADC}cycles[b]
$f_{ADCCONV}$	Conversion rate	438	500	563	k samples/s
INL	Integral nonlinearity	-	-	±1	LSB
DNL	Differential nonlinearity	-	-	±1	LSB
OFF	Offset	-	-	±1	LSB

Parameter	Parameter Name	Min	Nom	Max	Unit
GAIN	Gain	-	-	±1	LSB

a. The ADC reference voltage is 3.0 V. This reference voltage is internally generated from the 3.3 VDDA supply by a band gap circuit.

b. $t_{ADC} = 1/f_{ADC\ clock}$

24.2.8 Synchronous Serial Interface (SSI)

Table 24-16. SSI Characteristics

Parameter No.	Parameter	Parameter Name	Min	Nom	Max	Unit
S1	t_{clk_per}	SSIClk cycle time	2	-	65024	system clocks
S2	t_{clk_high}	SSIClk high time	-	0.5	-	t clk_per
S3	t_{clk_low}	SSIClk low time	-	0.5	-	t clk_per
S4	t_{clkrf}	SSIClk rise/fall time	-	7.4	26	ns
S5	t_{DMd}	Data from master valid delay time	0	-	20	ns
S6	t_{DMs}	Data from master setup time	20	-	-	ns
S7	t_{DMh}	Data from master hold time	40	-	-	ns
S8	t_{DSs}	Data from slave setup time	20	-	-	ns
S9	t_{DSh}	Data from slave hold time	40	-	-	ns

Figure 24-11. SSI Timing for TI Frame Format (FRF=01), Single Transfer Timing Measurement

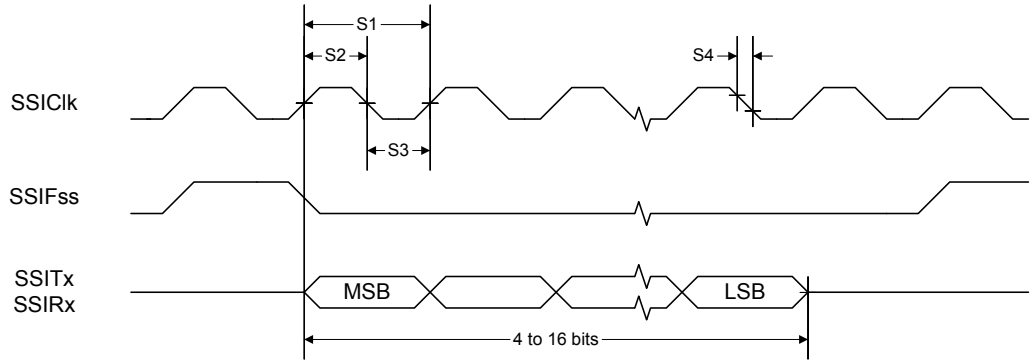

Figure 24-12. SSI Timing for MICROWIRE Frame Format (FRF=10), Single Transfer

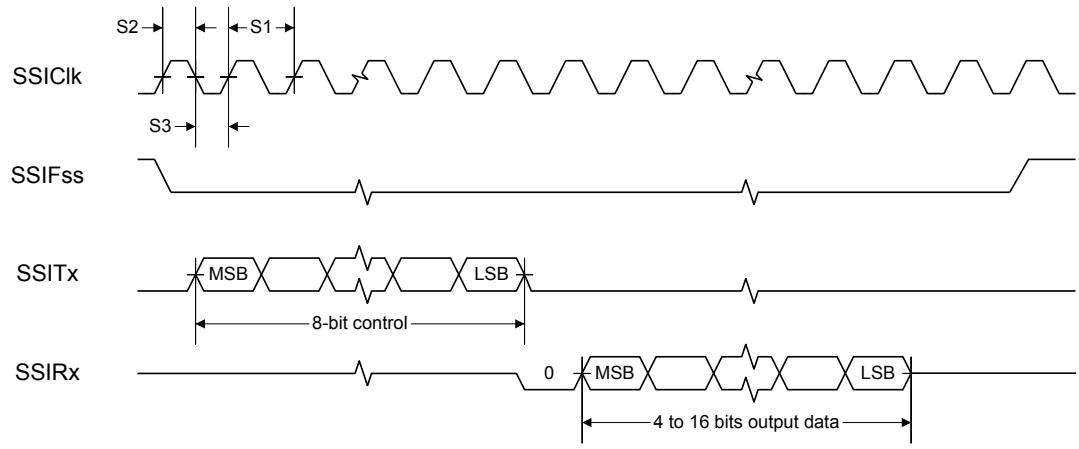

Figure 24-13. SSI Timing for SPI Frame Format (FRF=00), with SPH=1

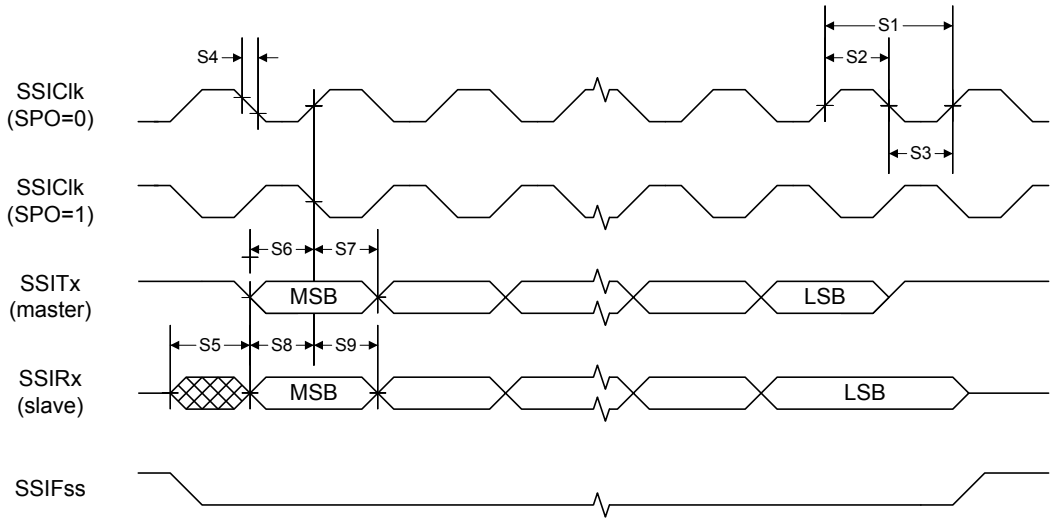

24.2.9 Inter-Integrated Circuit (I^2C) Interface

Table 24-17. I^2C Characteristics

Parameter No.	Parameter	Parameter Name	Min	Nom	Max	Unit
I1[a]	t_{SCH}	Start condition hold time	36	-	-	system clocks
I2[a]	t_{LP}	Clock Low period	36	-	-	system clocks
I3[b]	t_{SRT}	`I2CSCL/I2CSDA` rise time (V_{IL} =0.5 V to V_{IH} =2.4 V)	-	-	(see note b)	ns
I4[a]	t_{DH}	Data hold time	2	-	-	system clocks

Parameter No.	Parameter	Parameter Name	Min	Nom	Max	Unit
I5[c]	t_{SFT}	I2CSCL/I2CSDA fall time (V_{IH} =2.4 V to V_{IL} =0.5 V)	-	9	10	ns
I6[a]	t_{HT}	Clock High time	24	-	-	system clocks
I7[a]	t_{DS}	Data setup time	18	-	-	system clocks
I8[a]	t_{SCSR}	Start condition setup time (for repeated start condition only)	36	-	-	system clocks
I9[a]	t_{SCS}	Stop condition setup time	24	-	-	system clocks

a. Values depend on the value programmed into the TPR bit in the **I²C Master Timer Period (I2CMTPR)** register; a TPR programmed for the maximum I2CSCL frequency (TPR=0x2) results in a minimum output timing as shown in the table above. The I²C interface is designed to scale the actual data transition time to move it to the middle of the I2CSCL Low period. The actual position is affected by the value programmed into the TPR; however, the numbers given in the above values are minimum values.

b. Because I2CSCL and I2CSDA are open-drain-type outputs, which the controller can only actively drive Low, the time I2CSCL or I2CSDA takes to reach a high level depends on external signal capacitance and pull-up resistor values.

c. Specified at a nominal 50 pF load.

Figure 24-14. I²C Timing

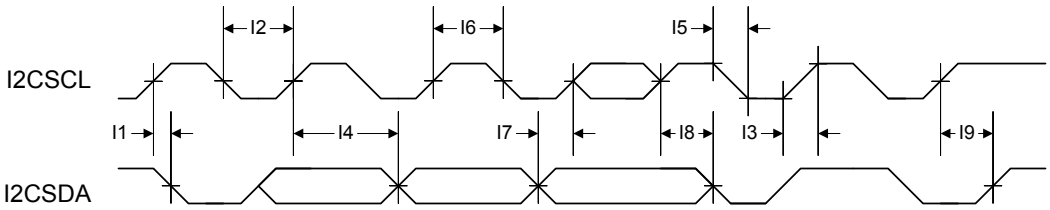

24.2.10 Ethernet Controller

Table 24-18. 100BASE-TX Transmitter Characteristics[a]

Parameter Name	Min	Nom	Max	Unit
Peak output amplitude	950	-	1050	mVpk
Output amplitude symmetry	98	-	102	%
Output overshoot	-	-	5	%
Rise/Fall time	3	-	5	ns
Rise/Fall time imbalance	-	-	500	ps
Duty cycle distortion	-	-	-	ps
Jitter	-	-	1.4	ns

a. Measured at the line side of the transformer.

Table 24-19. 100BASE-TX Transmitter Characteristics (informative)[a]

Parameter Name	Min	Nom	Max	Unit
Return loss	16	-	-	dB
Open-circuit inductance	350	-	-	µH

a. The specifications in this table are included for information only. They are mainly a function of the external transformer and termination resistors used for measurements.

Table 24-20. 100BASE-TX Receiver Characteristics

Parameter Name	Min	Nom	Max	Unit
Signal detect assertion threshold	600	700	-	mVppd

Parameter Name	Min	Nom	Max	Unit
Signal detect de-assertion threshold	350	425	-	mVppd
Differential input resistance	-	20	-	kΩ
Jitter tolerance (pk-pk)	4	-	-	ns
Baseline wander tracking	-75	-	+75	%
Signal detect assertion time	-	-	1000	µs
Signal detect de-assertion time	-	-	4	µs

Table 24-21. 10BASE-T Transmitter Characteristics[a]

Parameter Name	Min	Nom	Max	Unit
Peak differential output signal	2.2	-	2.8	V
Harmonic content	27	-	-	dB
Link pulse width	-	100	-	ns
Start-of-idle pulse width	-	300 350	-	ns

a. The Manchester-encoded data pulses, the link pulse and the start-of-idle pulse are tested against the templates and using the procedures found in Clause 14 of *IEEE 802.3*.

Table 24-22. 10BASE-T Transmitter Characteristics (informative)[a]

Parameter Name	Min	Nom	Max	Unit
Output return loss	15	-	-	dB
Output impedance balance	29-17log(f/10)	-	-	dB
Peak common-mode output voltage	-	-	50	mV
Common-mode rejection	-	-	100	mV
Common-mode rejection jitter	-	-	1	ns

a. The specifications in this table are included for information only. They are mainly a function of the external transformer and termination resistors used for measurements.

Table 24-23. 10BASE-T Receiver Characteristics

Parameter Name	Min	Nom	Max	Unit
DLL phase acquisition time	-	10	-	BT
Jitter tolerance (pk-pk)	30	-	-	ns
Input squelched threshold	500	600	700	mVppd
Input unsquelched threshold	275	350	425	mVppd
Differential input resistance	-	20	-	kΩ
Bit error ratio	-	10^{-10}	-	-
Common-mode rejection	25	-	-	V

Table 24-24. Isolation Transformers[a]

Name	Value	Condition
Turns ratio	1 CT : 1 CT	+/- 5%
Open-circuit inductance	350 uH (min)	@ 10 mV, 10 kHz
Leakage inductance	0.40 uH (max)	@ 1 MHz (min)
Inter-winding capacitance	25 pF (max)	

Name	Value	Condition
DC resistance	0.9 Ohm (max)	
Insertion loss	0.4 dB (typ)	0-65 MHz
HIPOT	1500	Vrms

a. Two simple 1:1 isolation transformers are required at the line interface. Transformers with integrated common-mode chokes are recommended for exceeding FCC requirements. This table gives the recommended line transformer characteristics.

Note: The 100Base-TX amplitude specifications assume a transformer loss of 0.4 dB. For the transmit line transformer with higher insertion losses, up to 1.2 dB of insertion loss can be compensated by selecting the appropriate setting in the Transmit Amplitude Selection (TX0) bits in the **MR19** register.

Table 24-25. Ethernet Reference Crystal[a]

Name	Value	Condition
Frequency	25.00000	MHz
Frequency tolerance	±50	PPM
Aging	±2	PPM/yr
Temperature stability (-40° to 85°)	±5	PPM
Temperature stability (-40° to 105°)	±5	PPM
Oscillation mode	Parallel resonance, fundamental mode	
Parameters at 25° C ±2° C; Drive level = 0.5 mW		
Drive level (typ)	50-100	µW
Shunt capacitance (max)	10	pF
Motional capacitance (min)	10	fF
Serious resistance (max)	60	Ω
Spurious response (max)	> 5 dB below main within 500 kHz	

a. If the internal crystal oscillator is used, select a crystal that meets these specifications.

Figure 24-15. External XTLP Oscillator Characteristics

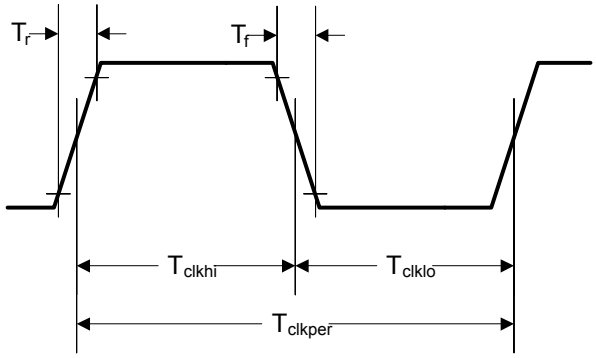

Table 24-26. External XTLP Oscillator Characteristics

Parameter Name	Symbol	Min	Nom	Max	Unit
XTLN Input Low Voltage	$XTLN_{ILV}$	-	-	0.8	-
XTLP Frequency[a]	$XTLP_f$	-	25.0	-	-
XTLP Period[b]	T_{clkper}	-	40	-	-
XTLP Duty Cycle	$XTLP_{DC}$	40 40	-	60 60	%
Rise/Fall Time	T_r , T_f	-	-	4.0	ns
Absolute Jitter	T_{JITTER}	-	-	0.1	ns

a. IEEE 802.3 frequency tolerance ±50 ppm.

b. IEEE 802.3 frequency tolerance ±50 ppm.

24.2.11 Analog Comparator

Table 24-27. Analog Comparator Characteristics

Parameter	Parameter Name	Min	Nom	Max	Unit
V_{OS}	Input offset voltage	-	±10	±25	mV
V_{CM}	Input common mode voltage range	0	-	V_{DD}-1.5	V
C_{MRR}	Common mode rejection ratio	50	-	-	dB
T_{RT}	Response time	-	-	1	µs
T_{MC}	Comparator mode change to Output Valid	-	-	10	µs

Table 24-28. Analog Comparator Voltage Reference Characteristics

Parameter	Parameter Name	Min	Nom	Max	Unit
R_{HR}	Resolution high range	-	V_{DD}/31	-	LSB
R_{LR}	Resolution low range	-	V_{DD}/23	-	LSB
A_{HR}	Absolute accuracy high range	-	-	±1/2	LSB
A_{LR}	Absolute accuracy low range	-	-	±1/4	LSB

25 Package Information

Figure 25-1. 100-Pin LQFP Package

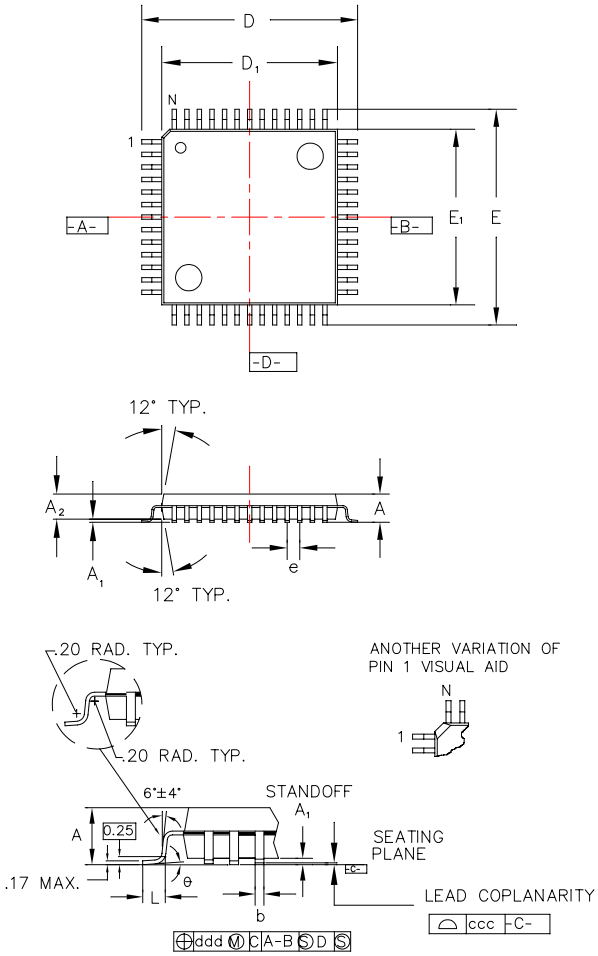

Note: The following notes apply to the package drawing.

1. All dimensions shown in mm.
2. Dimensions shown are nominal with tolerances indicated.
3. Foot length 'L' is measured at gage plane 0.25 mm above seating plane.

Body +2.00 mm Footprint, 1.4 mm package thickness		
Symbols	Leads	100L
A	Max.	1.60
A_1	-	0.05 Min./0.15 Max.
A_2	±0.05	1.40
D	±0.20	16.00
D_1	±0.05	14.00
E	±0.20	16.00
E_1	±0.05	14.00
L	+0.15/-0.10	0.60
e	Basic	0.50
b	+0.05	0.22
θ	-	0˚-7˚
ddd	Max.	0.08
ccc	Max.	0.08
JEDEC Reference Drawing		MS-026
Variation Designator		BED

Figure 25-2. 108-Ball BGA Package

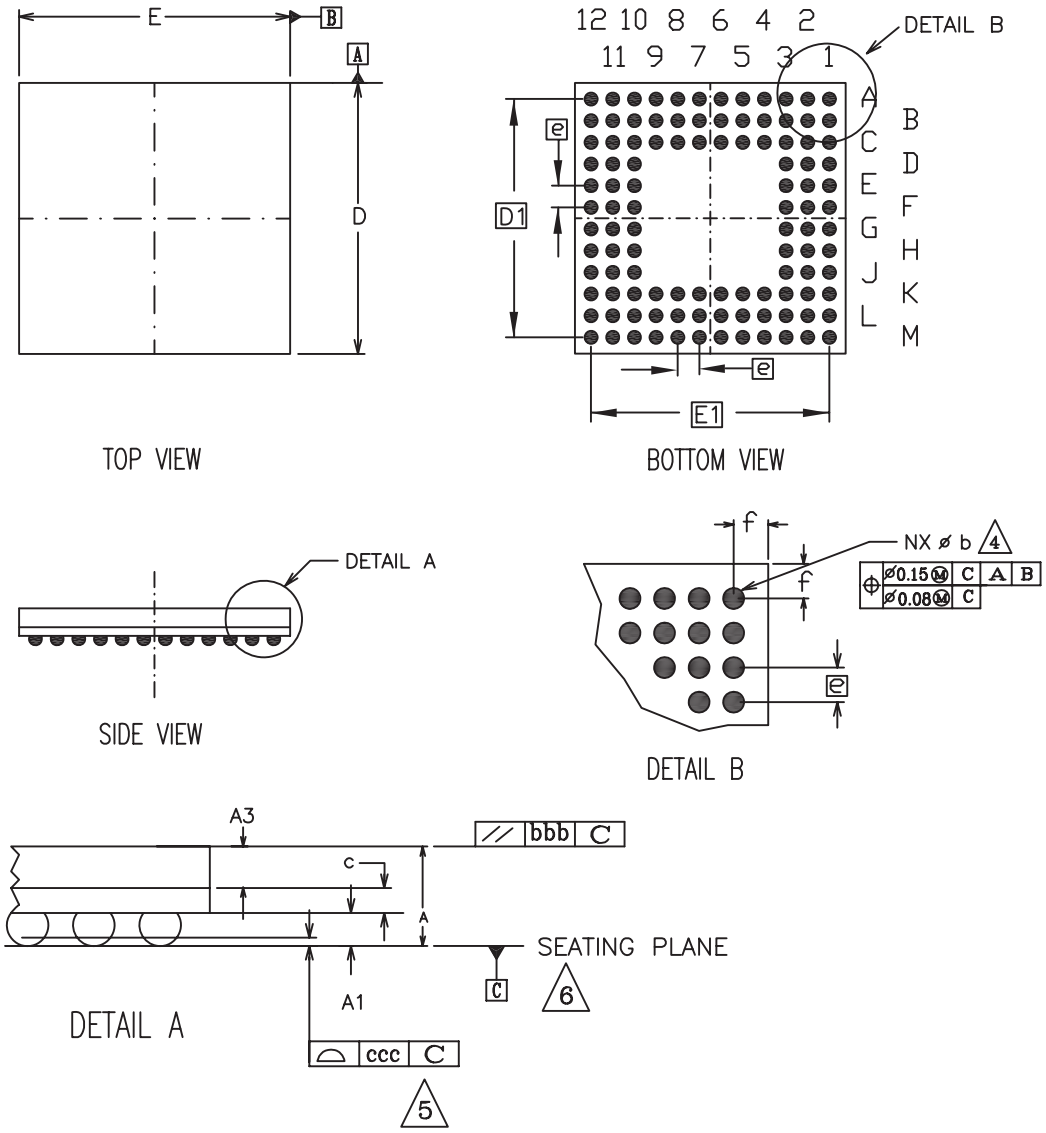

Note: The following notes apply to the package drawing.

1. ALL DIMENSIONS ARE IN MILLIMETERS.
2. 'e' REPRESENTS THE BASIC SOLDER BALL GRID PITCH.
3. 'M' REPRESENTS THE BASIC SOLDER BALL MATRIX SIZE. AND SYMBOL 'N' IS THE NUMBER OF BALLS AFTER DEPOPULATING.
4. 'b' IS MEASURABLE AT THE MAXIMUM SOLDER BALL DIAMETER AFTER REFLOW PARALLEL TO PRIMARY DAIUM C.
5. DIMENSION 'ccc' IS MEASURED PARALLEL TO PRIMARY DATUM C.
6. PRIMARY DATUM C AND SEATING PLANE ARE DEFINED BY THE SPHERICAL CROWNS OF THE SOLDER BALLS.
7. PACKAGE SURFACE SHALL BE MATTE FINISH CHARMILLES 24 TO 27.
8. SUBSTRATE MATERIAL BASE IS BT RESIN.
9. THE OVERALL PACKAGE THICKNESS "A" ALREADY CONSIDERS COLLAPSE BALLS
10. DIMENSIONING AND TOLERANCING PER ASME Y14.5M 1994.
11. EXCEPT DIMENSION b.

Symbols	MIN	NOM	MAX
A	1.22	1.36	1.50
A1	0.29	0.34	0.39
A3	0.65	0.70	0.75
c	0.28	0.32	0.36
D	9.85	10.00	10.15
D1	8.80 BSC		
E	9.85	10.00	10.15
E1	8.80 BSC		
b	0.43	0.48	0.53
bbb	.20		
ddd	.12		
e	0.80 BSC		
f	-	0.60	-
M	12		
n	108		
REF: JEDEC MO-219F			

A Serial Flash Loader

A.1 Serial Flash Loader

The Stellaris® serial flash loader is a preprogrammed flash-resident utility used to download code to the flash memory of a device without the use of a debug interface. The serial flash loader uses a simple packet interface to provide synchronous communication with the device. The flash loader runs off the crystal and does not enable the PLL, so its speed is determined by the crystal used. The two serial interfaces that can be used are the UART0 and SSI0 interfaces. For simplicity, both the data format and communication protocol are identical for both serial interfaces.

A.2 Interfaces

Once communication with the flash loader is established via one of the serial interfaces, that interface is used until the flash loader is reset or new code takes over. For example, once you start communicating using the SSI port, communications with the flash loader via the UART are disabled until the device is reset.

A.2.1 UART

The Universal Asynchronous Receivers/Transmitters (UART) communication uses a fixed serial format of 8 bits of data, no parity, and 1 stop bit. The baud rate used for communication is automatically detected by the flash loader and can be any valid baud rate supported by the host and the device. The auto detection sequence requires that the baud rate should be no more than 1/32 the crystal frequency of the board that is running the serial flash loader. This is actually the same as the hardware limitation for the maximum baud rate for any UART on a Stellaris® device which is calculated as follows:

```
Max Baud Rate = System Clock Frequency / 16
```

In order to determine the baud rate, the serial flash loader needs to determine the relationship between its own crystal frequency and the baud rate. This is enough information for the flash loader to configure its UART to the same baud rate as the host. This automatic baud-rate detection allows the host to use any valid baud rate that it wants to communicate with the device.

The method used to perform this automatic synchronization relies on the host sending the flash loader two bytes that are both 0x55. This generates a series of pulses to the flash loader that it can use to calculate the ratios needed to program the UART to match the host's baud rate. After the host sends the pattern, it attempts to read back one byte of data from the UART. The flash loader returns the value of 0xCC to indicate successful detection of the baud rate. If this byte is not received after at least twice the time required to transfer the two bytes, the host can resend another pattern of 0x55, 0x55, and wait for the 0xCC byte again until the flash loader acknowledges that it has received a synchronization pattern correctly. For example, the time to wait for data back from the flash loader should be calculated as at least 2*(20(bits/sync)/baud rate (bits/sec)). For a baud rate of 115200, this time is 2*(20/115200) or 0.35 ms.

A.2.2 SSI

The Synchronous Serial Interface (SSI) port also uses a fixed serial format for communications, with the framing defined as Motorola format with SPH set to 1 and SPO set to 1. See "Frame Formats" on page 361 in the SSI chapter for more information on formats for this transfer protocol. Like the UART, this interface has hardware requirements that limit the maximum speed that the SSI clock can run. This allows the SSI clock to be at most 1/12 the crystal frequency of the board running

the flash loader. Since the host device is the master, the SSI on the flash loader device does not need to determine the clock as it is provided directly by the host.

A.3 Packet Handling

All communications, with the exception of the UART auto-baud, are done via defined packets that are acknowledged (ACK) or not acknowledged (NAK) by the devices. The packets use the same format for receiving and sending packets, including the method used to acknowledge successful or unsuccessful reception of a packet.

A.3.1 Packet Format

All packets sent and received from the device use the following byte-packed format.

```
struct
{
 unsigned char ucSize;
 unsigned char ucCheckSum;
 unsigned char Data[];
};
```

ucSize	The first byte received holds the total size of the transfer including the size and checksum bytes.
ucChecksum	This holds a simple checksum of the bytes in the data buffer only. The algorithm is Data[0]+Data[1]+…+ Data[`ucSize`-3].
Data	This is the raw data intended for the device, which is formatted in some form of command interface. There should be `ucSize`–2 bytes of data provided in this buffer to or from the device.

A.3.2 Sending Packets

The actual bytes of the packet can be sent individually or all at once; the only limitation is that commands that cause flash memory access should limit the download sizes to prevent losing bytes during flash programming. This limitation is discussed further in the section that describes the serial flash loader command, COMMAND_SEND_DATA (see “COMMAND_SEND_DATA (0x24)” on page 644).

Once the packet has been formatted correctly by the host, it should be sent out over the UART or SSI interface. Then the host should poll the UART or SSI interface for the first non-zero data returned from the device. The first non-zero byte will either be an ACK (0xCC) or a NAK (0x33) byte from the device indicating the packet was received successfully (ACK) or unsuccessfully (NAK). This does not indicate that the actual contents of the command issued in the data portion of the packet were valid, just that the packet was received correctly.

A.3.3 Receiving Packets

The flash loader sends a packet of data in the same format that it receives a packet. The flash loader may transfer leading zero data before the first actual byte of data is sent out. The first non-zero byte is the size of the packet followed by a checksum byte, and finally followed by the data itself. There is no break in the data after the first non-zero byte is sent from the flash loader. Once the device communicating with the flash loader receives all the bytes, it must either ACK or NAK the packet to indicate that the transmission was successful. The appropriate response after sending a NAK to the flash loader is to resend the command that failed and request the data again. If needed, the host may send leading zeros before sending down the ACK/NAK signal to the flash loader, as the

flash loader only accepts the first non-zero data as a valid response. This zero padding is needed by the SSI interface in order to receive data to or from the flash loader.

A.4 Commands

The next section defines the list of commands that can be sent to the flash loader. The first byte of the data should always be one of the defined commands, followed by data or parameters as determined by the command that is sent.

A.4.1 COMMAND_PING (0X20)

This command simply accepts the command and sets the global status to success. The format of the packet is as follows:

```
Byte[0] = 0x03;
Byte[1] = checksum(Byte[2]);
Byte[2] = COMMAND_PING;
```

The ping command has 3 bytes and the value for `COMMAND_PING` is 0x20 and the checksum of one byte is that same byte, making Byte[1] also 0x20. Since the ping command has no real return status, the receipt of an ACK can be interpreted as a successful ping to the flash loader.

A.4.2 COMMAND_GET_STATUS (0x23)

This command returns the status of the last command that was issued. Typically, this command should be sent after every command to ensure that the previous command was successful or to properly respond to a failure. The command requires one byte in the data of the packet and should be followed by reading a packet with one byte of data that contains a status code. The last step is to ACK or NAK the received data so the flash loader knows that the data has been read.

```
Byte[0] = 0x03
Byte[1] = checksum(Byte[2])
Byte[2] = COMMAND_GET_STATUS
```

A.4.3 COMMAND_DOWNLOAD (0x21)

This command is sent to the flash loader to indicate where to store data and how many bytes will be sent by the `COMMAND_SEND_DATA` commands that follow. The command consists of two 32-bit values that are both transferred MSB first. The first 32-bit value is the address to start programming data into, while the second is the 32-bit size of the data that will be sent. This command also triggers an erase of the full area to be programmed so this command takes longer than other commands. This results in a longer time to receive the ACK/NAK back from the board. This command should be followed by a `COMMAND_GET_STATUS` to ensure that the Program Address and Program size are valid for the device running the flash loader.

The format of the packet to send this command is a follows:

```
Byte[0] = 11
Byte[1] = checksum(Bytes[2:10])
Byte[2] = COMMAND_DOWNLOAD
Byte[3] = Program Address [31:24]
Byte[4] = Program Address [23:16]
Byte[5] = Program Address [15:8]
Byte[6] = Program Address [7:0]
Byte[7] = Program Size [31:24]
```

```
Byte[8] = Program Size [23:16]
Byte[9] = Program Size [15:8]
Byte[10] = Program Size [7:0]
```

A.4.4 COMMAND_SEND_DATA (0x24)

This command should only follow a COMMAND_DOWNLOAD command or another COMMAND_SEND_DATA command if more data is needed. Consecutive send data commands automatically increment address and continue programming from the previous location. The caller should limit transfers of data to a maximum 8 bytes of packet data to allow the flash to program successfully and not overflow input buffers of the serial interfaces. The command terminates programming once the number of bytes indicated by the COMMAND_DOWNLOAD command has been received. Each time this function is called it should be followed by a COMMAND_GET_STATUS to ensure that the data was successfully programmed into the flash. If the flash loader sends a NAK to this command, the flash loader does not increment the current address to allow retransmission of the previous data.

```
Byte[0] = 11
Byte[1] = checksum(Bytes[2:10])
Byte[2] = COMMAND_SEND_DATA
Byte[3] = Data[0]
Byte[4] = Data[1]
Byte[5] = Data[2]
Byte[6] = Data[3]
Byte[7] = Data[4]
Byte[8] = Data[5]
Byte[9] = Data[6]
Byte[10] = Data[7]
```

A.4.5 COMMAND_RUN (0x22)

This command is used to tell the flash loader to execute from the address passed as the parameter in this command. This command consists of a single 32-bit value that is interpreted as the address to execute. The 32-bit value is transmitted MSB first and the flash loader responds with an ACK signal back to the host device before actually executing the code at the given address. This allows the host to know that the command was received successfully and the code is now running.

```
Byte[0] = 7
Byte[1] = checksum(Bytes[2:6])
Byte[2] = COMMAND_RUN
Byte[3] = Execute Address[31:24]
Byte[4] = Execute Address[23:16]
Byte[5] = Execute Address[15:8]
Byte[6] = Execute Address[7:0]
```

A.4.6 COMMAND_RESET (0x25)

This command is used to tell the flash loader device to reset. This is useful when downloading a new image that overwrote the flash loader and wants to start from a full reset. Unlike the COMMAND_RUN command, this allows the initial stack pointer to be read by the hardware and set up for the new code. It can also be used to reset the flash loader if a critical error occurs and the host device wants to restart communication with the flash loader.

```
Byte[0] = 3
Byte[1] = checksum(Byte[2])
Byte[2] = COMMAND_RESET
```

The flash loader responds with an ACK signal back to the host device before actually executing the software reset to the device running the flash loader. This allows the host to know that the command was received successfully and the part will be reset.

B Register Quick Reference

31	30	29	28	27	26	25	24	23	22	21	20	19	18	17	16
15	14	13	12	11	10	9	8	7	6	5	4	3	2	1	0
System Control Base 0x400F.E000															
DID0, type RO, offset 0x000, reset -															
	VER							CLASS							
MAJOR								MINOR							
PBORCTL, type R/W, offset 0x030, reset 0x0000.7FFD															
														BORIOR	
LDOPCTL, type R/W, offset 0x034, reset 0x0000.0000															
										VADJ					
RIS, type RO, offset 0x050, reset 0x0000.0000															
									PLLLRIS					BORRIS	
IMC, type R/W, offset 0x054, reset 0x0000.0000															
									PLLLIM					BORIM	
MISC, type R/W1C, offset 0x058, reset 0x0000.0000															
									PLLLMIS					BORMIS	
RESC, type R/W, offset 0x05C, reset -															
											SW	WDT	BOR	POR	EXT
RCC, type R/W, offset 0x060, reset 0x078E.3AD1															
				ACG	SYSDIV				USESYSDIV		USEPWMDIV	PWMDIV			
		PWRDN		BYPASS		XTAL				OSCSRC				IOSCDIS	MOSCDIS
PLLCFG, type RO, offset 0x064, reset -															
		F									R				
RCC2, type R/W, offset 0x070, reset 0x0780.2810															
USERCC2			SYSDIV2												
		PWRDN2		BYPASS2					OSCSRC2						
DSLPCLKCFG, type R/W, offset 0x144, reset 0x0780.0000															
			DSDIVORIDE												
									DSOSCSRC						
DID1, type RO, offset 0x004, reset -															
VER				FAM				PARTNO							
PINCOUNT								TEMP			PKG		ROHS	QUAL	
DC0, type RO, offset 0x008, reset 0x00FF.007F															
SRAMSZ															
FLASHSZ															
DC1, type RO, offset 0x010, reset 0x0111.32FF															
							CAN0				PWM				ADC
MINSYSDIV						MAXADCSPD		MPU	HIB	TEMPSNS	PLL	WDT	SWO	SWD	JTAG
DC2, type RO, offset 0x014, reset 0x010F.1313															
							COMP0					TIMER3	TIMER2	TIMER1	TIMER0
			I2C0			QEI1	QEI0				SSI0			UART1	UART0
DC3, type RO, offset 0x018, reset 0x830F.81FF															
32KHZ						CCP1	CCP0					ADC3	ADC2	ADC1	ADC0
PWMFAULT							C0O	C0PLUS	C0MINUS	PWM5	PWM4	PWM3	PWM2	PWM1	PWM0

31	30	29	28	27	26	25	24	23	22	21	20	19	18	17	16
15	14	13	12	11	10	9	8	7	6	5	4	3	2	1	0
DC4, type RO, offset 0x01C, reset 0x5100.007F															
	EPHY0		EMAC0				E1588								
									GPIOG	GPIOF	GPIOE	GPIOD	GPIOC	GPIOB	GPIOA
RCGC0, type R/W, offset 0x100, reset 0x00000040															
							CAN0				PWM				ADC
						MAXADCSPD			HIB			WDT			
SCGC0, type R/W, offset 0x110, reset 0x00000040															
							CAN0				PWM				ADC
						MAXADCSPD			HIB			WDT			
DCGC0, type R/W, offset 0x120, reset 0x00000040															
							CAN0				PWM				ADC
						MAXADCSPD			HIB			WDT			
RCGC1, type R/W, offset 0x104, reset 0x00000000															
							COMP0					TIMER3	TIMER2	TIMER1	TIMER0
			I2C0			QEI1	QEI0				SSI0			UART1	UART0
SCGC1, type R/W, offset 0x114, reset 0x00000000															
							COMP0					TIMER3	TIMER2	TIMER1	TIMER0
			I2C0			QEI1	QEI0				SSI0			UART1	UART0
DCGC1, type R/W, offset 0x124, reset 0x00000000															
							COMP0					TIMER3	TIMER2	TIMER1	TIMER0
			I2C0			QEI1	QEI0				SSI0			UART1	UART0
RCGC2, type R/W, offset 0x108, reset 0x00000000															
	EPHY0		EMAC0												
									GPIOG	GPIOF	GPIOE	GPIOD	GPIOC	GPIOB	GPIOA
SCGC2, type R/W, offset 0x118, reset 0x00000000															
	EPHY0		EMAC0												
									GPIOG	GPIOF	GPIOE	GPIOD	GPIOC	GPIOB	GPIOA
DCGC2, type R/W, offset 0x128, reset 0x00000000															
	EPHY0		EMAC0												
									GPIOG	GPIOF	GPIOE	GPIOD	GPIOC	GPIOB	GPIOA
SRCR0, type R/W, offset 0x040, reset 0x00000000															
							CAN0				PWM				ADC
									HIB			WDT			
SRCR1, type R/W, offset 0x044, reset 0x00000000															
							COMP0					TIMER3	TIMER2	TIMER1	TIMER0
			I2C0			QEI1	QEI0				SSI0			UART1	UART0
SRCR2, type R/W, offset 0x048, reset 0x00000000															
	EPHY0		EMAC0												
									GPIOG	GPIOF	GPIOE	GPIOD	GPIOC	GPIOB	GPIOA
Hibernation Module Base 0x400F.C000															
HIBRTCC, type RO, offset 0x000, reset 0x0000.0000															
RTCC															
RTCC															
HIBRTCM0, type R/W, offset 0x004, reset 0xFFFF.FFFF															
RTCM0															
RTCM0															
HIBRTCM1, type R/W, offset 0x008, reset 0xFFFF.FFFF															
RTCM1															
RTCM1															
HIBRTCLD, type R/W, offset 0x00C, reset 0xFFFF.FFFF															
RTCLD															
RTCLD															

31	30	29	28	27	26	25	24	23	22	21	20	19	18	17	16
15	14	13	12	11	10	9	8	7	6	5	4	3	2	1	0
HIBCTL, type R/W, offset 0x010, reset 0x0000.0000															
								VABORT	CLK32EN	LOWBATEN	PINWEN	RTCWEN	CLKSEL	HIBREQ	RTCEN
HIBIM, type R/W, offset 0x014, reset 0x0000.0000															
												EXTW	LOWBAT	RTCALT1	RTCALT0
HIBRIS, type RO, offset 0x018, reset 0x0000.0000															
												EXTW	LOWBAT	RTCALT1	RTCALT0
HIBMIS, type RO, offset 0x01C, reset 0x0000.0000															
												EXTW	LOWBAT	RTCALT1	RTCALT0
HIBIC, type R/W1C, offset 0x020, reset 0x0000.0000															
												EXTW	LOWBAT	RTCALT1	RTCALT0
HIBRTCT, type R/W, offset 0x024, reset 0x0000.7FFF															
TRIM															
HIBDATA, type R/W, offset 0x030-0x12C, reset 0x0000.0000															
RTD															
RTD															
Internal Memory **Flash Registers (Flash Control Offset)** Base 0x400F.D000															
FMA, type R/W, offset 0x000, reset 0x0000.0000															
														OFFSET	
OFFSET															
FMD, type R/W, offset 0x004, reset 0x0000.0000															
DATA															
DATA															
FMC, type R/W, offset 0x008, reset 0x0000.0000															
WRKEY															
												COMT	MERASE	ERASE	WRITE
FCRIS, type RO, offset 0x00C, reset 0x0000.0000															
														PRIS	ARIS
FCIM, type R/W, offset 0x010, reset 0x0000.0000															
														PMASK	AMASK
FCMISC, type R/W1C, offset 0x014, reset 0x0000.0000															
														PMISC	AMISC
Internal Memory **Flash Registers (System Control Offset)** Base 0x400F.E000															
USECRL, type R/W, offset 0x140, reset 0x31															
								USEC							
FMPRE0, type R/W, offset 0x130 and 0x200, reset 0xFFFF.FFFF															
READ_ENABLE															
READ_ENABLE															

31	30	29	28	27	26	25	24	23	22	21	20	19	18	17	16
15	14	13	12	11	10	9	8	7	6	5	4	3	2	1	0
FMPPE0, type R/W, offset 0x134 and 0x400, reset 0xFFFF.FFFF															
PROG_ENABLE															
PROG_ENABLE															
USER_DBG, type R/W, offset 0x1D0, reset 0xFFFF.FFFE															
NW	DATA														
DATA														DBG1	DBG0
USER_REG0, type R/W, offset 0x1E0, reset 0xFFFF.FFFF															
NW	DATA														
DATA															
USER_REG1, type R/W, offset 0x1E4, reset 0xFFFF.FFFF															
NW	DATA														
DATA															
FMPRE1, type R/W, offset 0x204, reset 0xFFFF.FFFF															
READ_ENABLE															
READ_ENABLE															
FMPRE2, type R/W, offset 0x208, reset 0xFFFF.FFFF															
READ_ENABLE															
READ_ENABLE															
FMPRE3, type R/W, offset 0x20C, reset 0xFFFF.FFFF															
READ_ENABLE															
READ_ENABLE															
FMPPE1, type R/W, offset 0x404, reset 0xFFFF.FFFF															
PROG_ENABLE															
PROG_ENABLE															
FMPPE2, type R/W, offset 0x408, reset 0xFFFF.FFFF															
PROG_ENABLE															
PROG_ENABLE															
FMPPE3, type R/W, offset 0x40C, reset 0xFFFF.FFFF															
PROG_ENABLE															
PROG_ENABLE															
General-Purpose Input/Outputs (GPIOs) GPIO Port A base: 0x4000.4000 GPIO Port B base: 0x4000.5000 GPIO Port C base: 0x4000.6000 GPIO Port D base: 0x4000.7000 GPIO Port E base: 0x4002.4000 GPIO Port F base: 0x4002.5000 GPIO Port G base: 0x4002.6000															
GPIODATA, type R/W, offset 0x000, reset 0x0000.0000															
								DATA							
GPIODIR, type R/W, offset 0x400, reset 0x0000.0000															
								DIR							
GPIOIS, type R/W, offset 0x404, reset 0x0000.0000															
								IS							
GPIOIBE, type R/W, offset 0x408, reset 0x0000.0000															
								IBE							
GPIOIEV, type R/W, offset 0x40C, reset 0x0000.0000															
								IEV							

31	30	29	28	27	26	25	24	23	22	21	20	19	18	17	16
15	14	13	12	11	10	9	8	7	6	5	4	3	2	1	0
GPIOIM, type R/W, offset 0x410, reset 0x0000.0000															
								IME							
GPIORIS, type RO, offset 0x414, reset 0x0000.0000															
								RIS							
GPIOMIS, type RO, offset 0x418, reset 0x0000.0000															
								MIS							
GPIOICR, type W1C, offset 0x41C, reset 0x0000.0000															
								IC							
GPIOAFSEL, type R/W, offset 0x420, reset -															
								AFSEL							
GPIODR2R, type R/W, offset 0x500, reset 0x0000.00FF															
								DRV2							
GPIODR4R, type R/W, offset 0x504, reset 0x0000.0000															
								DRV4							
GPIODR8R, type R/W, offset 0x508, reset 0x0000.0000															
								DRV8							
GPIOODR, type R/W, offset 0x50C, reset 0x0000.0000															
								ODE							
GPIOPUR, type R/W, offset 0x510, reset -															
								PUE							
GPIOPDR, type R/W, offset 0x514, reset 0x0000.0000															
								PDE							
GPIOSLR, type R/W, offset 0x518, reset 0x0000.0000															
								SRL							
GPIODEN, type R/W, offset 0x51C, reset -															
								DEN							
GPIOLOCK, type R/W, offset 0x520, reset 0x0000.0001															
LOCK															
LOCK															
GPIOCR, type -, offset 0x524, reset -															
								CR							
GPIOPeriphID4, type RO, offset 0xFD0, reset 0x0000.0000															
								PID4							
GPIOPeriphID5, type RO, offset 0xFD4, reset 0x0000.0000															
								PID5							

31	30	29	28	27	26	25	24	23	22	21	20	19	18	17	16
15	14	13	12	11	10	9	8	7	6	5	4	3	2	1	0
GPIOPeriphID6, type RO, offset 0xFD8, reset 0x0000.0000															
								PID6							
GPIOPeriphID7, type RO, offset 0xFDC, reset 0x0000.0000															
								PID7							
GPIOPeriphID0, type RO, offset 0xFE0, reset 0x0000.0061															
								PID0							
GPIOPeriphID1, type RO, offset 0xFE4, reset 0x0000.0000															
								PID1							
GPIOPeriphID2, type RO, offset 0xFE8, reset 0x0000.0018															
								PID2							
GPIOPeriphID3, type RO, offset 0xFEC, reset 0x0000.0001															
								PID3							
GPIOPCellID0, type RO, offset 0xFF0, reset 0x0000.000D															
								CID0							
GPIOPCellID1, type RO, offset 0xFF4, reset 0x0000.00F0															
								CID1							
GPIOPCellID2, type RO, offset 0xFF8, reset 0x0000.0005															
								CID2							
GPIOPCellID3, type RO, offset 0xFFC, reset 0x0000.00B1															
								CID3							
General-Purpose Timers Timer0 base: 0x4003.0000 Timer1 base: 0x4003.1000 Timer2 base: 0x4003.2000 Timer3 base: 0x4003.3000															
GPTMCFG, type R/W, offset 0x000, reset 0x0000.0000															
													GPTMCFG		
GPTMTAMR, type R/W, offset 0x004, reset 0x0000.0000															
												TAAMS	TACMR	TAMR	
GPTMTBMR, type R/W, offset 0x008, reset 0x0000.0000															
												TBAMS	TBCMR	TBMR	
GPTMCTL, type R/W, offset 0x00C, reset 0x0000.0000															
	TBPWML	TBOTE		TBEVENT		TBSTALL	TBEN		TAPWML	TAOTE	RTCEN	TAEVENT		TASTALL	TAEN
GPTMIMR, type R/W, offset 0x018, reset 0x0000.0000															
					CBEIM	CBMIM	TBTOIM					RTCIM	CAEIM	CAMIM	TATOIM
GPTMRIS, type RO, offset 0x01C, reset 0x0000.0000															
					CBERIS	CBMRIS	TBTORIS					RTCRIS	CAERIS	CAMRIS	TATORIS

31	30	29	28	27	26	25	24	23	22	21	20	19	18	17	16
15	14	13	12	11	10	9	8	7	6	5	4	3	2	1	0
GPTMMIS, type RO, offset 0x020, reset 0x0000.0000															
					CBEMIS	CBMMIS	TBTOMIS					RTCMIS	CAEMIS	CAMMIS	TATOMIS
GPTMICR, type W1C, offset 0x024, reset 0x0000.0000															
					CBECINT	CBMCINT	TBTOCINT					RTCCINT	CAECINT	CAMCINT	TATOCINT
GPTMTAILR, type R/W, offset 0x028, reset 0x0000.FFFF (16-bit mode) and 0xFFFF.FFFF (32-bit mode)															
TAILRH															
TAILRL															
GPTMTBILR, type R/W, offset 0x02C, reset 0x0000.FFFF															
TBILRL															
GPTMTAMATCHR, type R/W, offset 0x030, reset 0x0000.FFFF (16-bit mode) and 0xFFFF.FFFF (32-bit mode)															
TAMRH															
TAMRL															
GPTMTBMATCHR, type R/W, offset 0x034, reset 0x0000.FFFF															
TBMRL															
GPTMTAPR, type R/W, offset 0x038, reset 0x0000.0000															
								TAPSR							
GPTMTBPR, type R/W, offset 0x03C, reset 0x0000.0000															
								TBPSR							
GPTMTAPMR, type R/W, offset 0x040, reset 0x0000.0000															
								TAPSMR							
GPTMTBPMR, type R/W, offset 0x044, reset 0x0000.0000															
								TBPSMR							
GPTMTAR, type RO, offset 0x048, reset 0x0000.FFFF (16-bit mode) and 0xFFFF.FFFF (32-bit mode)															
TARH															
TARL															
GPTMTBR, type RO, offset 0x04C, reset 0x0000.FFFF															
TBRL															
Watchdog Timer Base 0x4000.0000															
WDTLOAD, type R/W, offset 0x000, reset 0xFFFF.FFFF															
WDTLoad															
WDTLoad															
WDTVALUE, type RO, offset 0x004, reset 0xFFFF.FFFF															
WDTValue															
WDTValue															
WDTCTL, type R/W, offset 0x008, reset 0x0000.0000															
														RESEN	INTEN
WDTICR, type WO, offset 0x00C, reset -															
WDTIntClr															
WDTIntClr															
WDTRIS, type RO, offset 0x010, reset 0x0000.0000															
															WDTRIS

31	30	29	28	27	26	25	24	23	22	21	20	19	18	17	16
15	14	13	12	11	10	9	8	7	6	5	4	3	2	1	0
WDTMIS, type RO, offset 0x014, reset 0x0000.0000															
															WDTMIS
WDTTEST, type R/W, offset 0x418, reset 0x0000.0000															
							STALL								
WDTLOCK, type R/W, offset 0xC00, reset 0x0000.0000															
WDTLock															
WDTLock															
WDTPeriphID4, type RO, offset 0xFD0, reset 0x0000.0000															
PID4															
WDTPeriphID5, type RO, offset 0xFD4, reset 0x0000.0000															
PID5															
WDTPeriphID6, type RO, offset 0xFD8, reset 0x0000.0000															
PID6															
WDTPeriphID7, type RO, offset 0xFDC, reset 0x0000.0000															
PID7															
WDTPeriphID0, type RO, offset 0xFE0, reset 0x0000.0005															
PID0															
WDTPeriphID1, type RO, offset 0xFE4, reset 0x0000.0018															
PID1															
WDTPeriphID2, type RO, offset 0xFE8, reset 0x0000.0018															
PID2															
WDTPeriphID3, type RO, offset 0xFEC, reset 0x0000.0001															
PID3															
WDTPCellID0, type RO, offset 0xFF0, reset 0x0000.000D															
CID0															
WDTPCellID1, type RO, offset 0xFF4, reset 0x0000.00F0															
CID1															
WDTPCellID2, type RO, offset 0xFF8, reset 0x0000.0005															
CID2															
WDTPCellID3, type RO, offset 0xFFC, reset 0x0000.00B1															
CID3															
Analog-to-Digital Converter (ADC) Base 0x4003.8000															
ADCACTSS, type R/W, offset 0x000, reset 0x0000.0000															
												ASEN3	ASEN2	ASEN1	ASEN0
ADCRIS, type RO, offset 0x004, reset 0x0000.0000															
												INR3	INR2	INR1	INR0

31	30	29	28	27	26	25	24	23	22	21	20	19	18	17	16
15	14	13	12	11	10	9	8	7	6	5	4	3	2	1	0
ADCIM, type R/W, offset 0x008, reset 0x0000.0000															
												MASK3	MASK2	MASK1	MASK0
ADCISC, type R/W1C, offset 0x00C, reset 0x0000.0000															
												IN3	IN2	IN1	IN0
ADCOSTAT, type R/W1C, offset 0x010, reset 0x0000.0000															
												OV3	OV2	OV1	OV0
ADCEMUX, type R/W, offset 0x014, reset 0x0000.0000															
EM3				EM2				EM1				EM0			
ADCUSTAT, type R/W1C, offset 0x018, reset 0x0000.0000															
												UV3	UV2	UV1	UV0
ADCSSPRI, type R/W, offset 0x020, reset 0x0000.3210															
		SS3				SS2				SS1				SS0	
ADCPSSI, type WO, offset 0x028, reset -															
												SS3	SS2	SS1	SS0
ADCSAC, type R/W, offset 0x030, reset 0x0000.0000															
													AVG		
ADCSSMUX0, type R/W, offset 0x040, reset 0x0000.0000															
		MUX7				MUX6				MUX5				MUX4	
		MUX3				MUX2				MUX1				MUX0	
ADCSSCTL0, type R/W, offset 0x044, reset 0x0000.0000															
TS7	IE7	END7	D7	TS6	IE6	END6	D6	TS5	IE5	END5	D5	TS4	IE4	END4	D4
TS3	IE3	END3	D3	TS2	IE2	END2	D2	TS1	IE1	END1	D1	TS0	IE0	END0	D0
ADCSSFIFO0, type RO, offset 0x048, reset 0x0000.0000															
						DATA									
ADCSSFIFO1, type RO, offset 0x068, reset 0x0000.0000															
						DATA									
ADCSSFIFO2, type RO, offset 0x088, reset 0x0000.0000															
						DATA									
ADCSSFIFO3, type RO, offset 0x0A8, reset 0x0000.0000															
						DATA									
ADCSSFSTAT0, type RO, offset 0x04C, reset 0x0000.0100															
			FULL				EMPTY	HPTR				TPTR			
ADCSSFSTAT1, type RO, offset 0x06C, reset 0x0000.0100															
			FULL				EMPTY	HPTR				TPTR			
ADCSSFSTAT2, type RO, offset 0x08C, reset 0x0000.0100															
			FULL				EMPTY	HPTR				TPTR			

31	30	29	28	27	26	25	24	23	22	21	20	19	18	17	16
15	14	13	12	11	10	9	8	7	6	5	4	3	2	1	0
ADCSSFSTAT3, type RO, offset 0x0AC, reset 0x0000.0100															
			FULL				EMPTY	HPTR				TPTR			
ADCSSMUX1, type R/W, offset 0x060, reset 0x0000.0000															
		MUX3				MUX2				MUX1				MUX0	
ADCSSMUX2, type R/W, offset 0x080, reset 0x0000.0000															
		MUX3				MUX2				MUX1				MUX0	
ADCSSCTL1, type R/W, offset 0x064, reset 0x0000.0000															
TS3	IE3	END3	D3	TS2	IE2	END2	D2	TS1	IE1	END1	D1	TS0	IE0	END0	D0
ADCSSCTL2, type R/W, offset 0x084, reset 0x0000.0000															
TS3	IE3	END3	D3	TS2	IE2	END2	D2	TS1	IE1	END1	D1	TS0	IE0	END0	D0
ADCSSMUX3, type R/W, offset 0x0A0, reset 0x0000.0000															
														MUX0	
ADCSSCTL3, type R/W, offset 0x0A4, reset 0x0000.0002															
												TS0	IE0	END0	D0
ADCTMLB, type R/W, offset 0x100, reset 0x0000.0000															
															LB
Universal Asynchronous Receivers/Transmitters (UARTs) UART0 base: 0x4000.C000 UART1 base: 0x4000.D000															
UARTDR, type R/W, offset 0x000, reset 0x0000.0000															
				OE	BE	PE	FE	DATA							
UARTRSR/UARTECR, type RO, offset 0x004, reset 0x0000.0000 (Reads)															
												OE	BE	PE	FE
UARTRSR/UARTECR, type WO, offset 0x004, reset 0x0000.0000 (Writes)															
								DATA							
UARTFR, type RO, offset 0x018, reset 0x0000.0090															
								TXFE	RXFF	TXFF	RXFE	BUSY			
UARTILPR, type R/W, offset 0x020, reset 0x0000.0000															
								ILPDVSR							
UARTIBRD, type R/W, offset 0x024, reset 0x0000.0000															
DIVINT															
UARTFBRD, type R/W, offset 0x028, reset 0x0000.0000															
										DIVFRAC					
UARTLCRH, type R/W, offset 0x02C, reset 0x0000.0000															
								SPS	WLEN		FEN	STP2	EPS	PEN	BRK

31	30	29	28	27	26	25	24	23	22	21	20	19	18	17	16
15	14	13	12	11	10	9	8	7	6	5	4	3	2	1	0
UARTCTL, type R/W, offset 0x030, reset 0x0000.0300															
						RXE	TXE	LBE					SIRLP	SIREN	UARTEN
UARTIFLS, type R/W, offset 0x034, reset 0x0000.0012															
										RXIFLSEL			TXIFLSEL		
UARTIM, type R/W, offset 0x038, reset 0x0000.0000															
					OEIM	BEIM	PEIM	FEIM	RTIM	TXIM	RXIM				
UARTRIS, type RO, offset 0x03C, reset 0x0000.000F															
					OERIS	BERIS	PERIS	FERIS	RTRIS	TXRIS	RXRIS				
UARTMIS, type RO, offset 0x040, reset 0x0000.0000															
					OEMIS	BEMIS	PEMIS	FEMIS	RTMIS	TXMIS	RXMIS				
UARTICR, type W1C, offset 0x044, reset 0x0000.0000															
					OEIC	BEIC	PEIC	FEIC	RTIC	TXIC	RXIC				
UARTPeriphID4, type RO, offset 0xFD0, reset 0x0000.0000															
								PID4							
UARTPeriphID5, type RO, offset 0xFD4, reset 0x0000.0000															
								PID5							
UARTPeriphID6, type RO, offset 0xFD8, reset 0x0000.0000															
								PID6							
UARTPeriphID7, type RO, offset 0xFDC, reset 0x0000.0000															
								PID7							
UARTPeriphID0, type RO, offset 0xFE0, reset 0x0000.0011															
								PID0							
UARTPeriphID1, type RO, offset 0xFE4, reset 0x0000.0000															
								PID1							
UARTPeriphID2, type RO, offset 0xFE8, reset 0x0000.0018															
								PID2							
UARTPeriphID3, type RO, offset 0xFEC, reset 0x0000.0001															
								PID3							
UARTPCellID0, type RO, offset 0xFF0, reset 0x0000.000D															
								CID0							
UARTPCellID1, type RO, offset 0xFF4, reset 0x0000.00F0															
								CID1							
UARTPCellID2, type RO, offset 0xFF8, reset 0x0000.0005															
								CID2							

31	30	29	28	27	26	25	24	23	22	21	20	19	18	17	16
15	14	13	12	11	10	9	8	7	6	5	4	3	2	1	0
UARTPCellID3, type RO, offset 0xFFC, reset 0x0000.00B1															
								CID3							
Synchronous Serial Interface (SSI) SSI0 base: 0x4000.8000															
SSICR0, type R/W, offset 0x000, reset 0x0000.0000															
SCR								SPH	SPO	FRF		DSS			
SSICR1, type R/W, offset 0x004, reset 0x0000.0000															
												SOD	MS	SSE	LBM
SSIDR, type R/W, offset 0x008, reset 0x0000.0000															
DATA															
SSISR, type RO, offset 0x00C, reset 0x0000.0003															
											BSY	RFF	RNE	TNF	TFE
SSICPSR, type R/W, offset 0x010, reset 0x0000.0000															
								CPSDVSR							
SSIIM, type R/W, offset 0x014, reset 0x0000.0000															
												TXIM	RXIM	RTIM	RORIM
SSIRIS, type RO, offset 0x018, reset 0x0000.0008															
												TXRIS	RXRIS	RTRIS	RORRIS
SSIMIS, type RO, offset 0x01C, reset 0x0000.0000															
												TXMIS	RXMIS	RTMIS	RORMIS
SSIICR, type W1C, offset 0x020, reset 0x0000.0000															
														RTIC	RORIC
SSIPeriphID4, type RO, offset 0xFD0, reset 0x0000.0000															
								PID4							
SSIPeriphID5, type RO, offset 0xFD4, reset 0x0000.0000															
								PID5							
SSIPeriphID6, type RO, offset 0xFD8, reset 0x0000.0000															
								PID6							
SSIPeriphID7, type RO, offset 0xFDC, reset 0x0000.0000															
								PID7							
SSIPeriphID0, type RO, offset 0xFE0, reset 0x0000.0022															
								PID0							
SSIPeriphID1, type RO, offset 0xFE4, reset 0x0000.0000															
								PID1							
SSIPeriphID2, type RO, offset 0xFE8, reset 0x0000.0018															
								PID2							

31	30	29	28	27	26	25	24	23	22	21	20	19	18	17	16
15	14	13	12	11	10	9	8	7	6	5	4	3	2	1	0
SSIPeriphID3, type RO, offset 0xFEC, reset 0x0000.0001															
								PID3							
SSIPCellID0, type RO, offset 0xFF0, reset 0x0000.000D															
								CID0							
SSIPCellID1, type RO, offset 0xFF4, reset 0x0000.00F0															
								CID1							
SSIPCellID2, type RO, offset 0xFF8, reset 0x0000.0005															
								CID2							
SSIPCellID3, type RO, offset 0xFFC, reset 0x0000.00B1															
								CID3							
Inter-Integrated Circuit (I^{2}C) Interface															
I^{2}C Master															
I2C Master 0 base: 0x4002.0000															
I2CMSA, type R/W, offset 0x000, reset 0x0000.0000															
								SA							R/S
I2CMCS, type RO, offset 0x004, reset 0x0000.0000 (Reads)															
									BUSBSY	IDLE	ARBLST	DATACK	ADRACK	ERROR	BUSY
I2CMCS, type WO, offset 0x004, reset 0x0000.0000 (Writes)															
												ACK	STOP	START	RUN
I2CMDR, type R/W, offset 0x008, reset 0x0000.0000															
								DATA							
I2CMTPR, type R/W, offset 0x00C, reset 0x0000.0001															
								TPR							
I2CMIMR, type R/W, offset 0x010, reset 0x0000.0000															
															IM
I2CMRIS, type RO, offset 0x014, reset 0x0000.0000															
															RIS
I2CMMIS, type RO, offset 0x018, reset 0x0000.0000															
															MIS
I2CMICR, type WO, offset 0x01C, reset 0x0000.0000															
															IC
I2CMCR, type R/W, offset 0x020, reset 0x0000.0000															
										SFE	MFE				LPBK

31	30	29	28	27	26	25	24	23	22	21	20	19	18	17	16
15	14	13	12	11	10	9	8	7	6	5	4	3	2	1	0
Inter-Integrated Circuit (I^2C) Interface															
I^2C Slave															
I2C Slave 0 base: 0x4002.0800															
I2CSOAR, type R/W, offset 0x000, reset 0x0000.0000															
									OAR						
I2CSCSR, type RO, offset 0x004, reset 0x0000.0000 (Reads)															
													FBR	TREQ	RREQ
I2CSCSR, type WO, offset 0x004, reset 0x0000.0000 (Writes)															
															DA
I2CSDR, type R/W, offset 0x008, reset 0x0000.0000															
								DATA							
I2CSIMR, type R/W, offset 0x00C, reset 0x0000.0000															
															DATAIM
I2CSRIS, type RO, offset 0x010, reset 0x0000.0000															
															DATARIS
I2CSMIS, type RO, offset 0x014, reset 0x0000.0000															
															DATAMIS
I2CSICR, type WO, offset 0x018, reset 0x0000.0000															
															DATAIC
Controller Area Network (CAN) Module															
CAN0 base: 0x4004.0000															
CANCTL, type R/W, offset 0x000, reset 0x0000.0001															
								TEST	CCE	DAR		EIE	SIE	IE	INIT
CANSTS, type R/W, offset 0x004, reset 0x0000.0000															
								BOFF	EWARN	EPASS	RXOK	TXOK	LEC		
CANERR, type RO, offset 0x008, reset 0x0000.0000															
RP	REC							TEC							
CANBIT, type R/W, offset 0x00C, reset 0x0000.2301															
	TSEG2			TSEG1				SJW		BRP					
CANINT, type RO, offset 0x010, reset 0x0000.0000															
INTID															
CANTST, type R/W, offset 0x014, reset 0x0000.0000															
								RX	TX		LBACK	SILENT	BASIC		
CANBRPE, type R/W, offset 0x018, reset 0x0000.0000															
												BRPE			

31	30	29	28	27	26	25	24	23	22	21	20	19	18	17	16
15	14	13	12	11	10	9	8	7	6	5	4	3	2	1	0
CANIF1CRQ, type R/W, offset 0x020, reset 0x0000.0001															
BUSY										MNUM					
CANIF2CRQ, type R/W, offset 0x080, reset 0x0000.0001															
BUSY										MNUM					
CANIF1CMSK, type R/W, offset 0x024, reset 0x0000.0000															
								WRNRD	MASK	ARB	CONTROL	CLRINTPND	NEWDAT / TXRQST	DATAA	DATAB
CANIF2CMSK, type R/W, offset 0x084, reset 0x0000.0000															
								WRNRD	MASK	ARB	CONTROL	CLRINTPND	NEWDAT / TXRQST	DATAA	DATAB
CANIF1MSK1, type R/W, offset 0x028, reset 0x0000.FFFF															
MSK															
CANIF2MSK1, type R/W, offset 0x088, reset 0x0000.FFFF															
MSK															
CANIF1MSK2, type R/W, offset 0x02C, reset 0x0000.FFFF															
MXTD	MDIR		MSK												
CANIF2MSK2, type R/W, offset 0x08C, reset 0x0000.FFFF															
MXTD	MDIR		MSK												
CANIF1ARB1, type R/W, offset 0x030, reset 0x0000.0000															
ID															
CANIF2ARB1, type R/W, offset 0x090, reset 0x0000.0000															
ID															
CANIF1ARB2, type R/W, offset 0x034, reset 0x0000.0000															
MSGVAL	XTD	DIR	ID												
CANIF2ARB2, type R/W, offset 0x094, reset 0x0000.0000															
MSGVAL	XTD	DIR	ID												
CANIF1MCTL, type R/W, offset 0x038, reset 0x0000.0000															
NEWDAT	MSGLST	INTPND	UMASK	TXIE	RXIE	RMTEN	TXRQST	EOB				DLC			
CANIF2MCTL, type R/W, offset 0x098, reset 0x0000.0000															
NEWDAT	MSGLST	INTPND	UMASK	TXIE	RXIE	RMTEN	TXRQST	EOB				DLC			
CANIF1DA1, type R/W, offset 0x03C, reset 0x0000.0000															
DATA															
CANIF1DA2, type R/W, offset 0x040, reset 0x0000.0000															
DATA															
CANIF1DB1, type R/W, offset 0x044, reset 0x0000.0000															
DATA															

31	30	29	28	27	26	25	24	23	22	21	20	19	18	17	16
15	14	13	12	11	10	9	8	7	6	5	4	3	2	1	0
CANIF1DB2, type R/W, offset 0x048, reset 0x0000.0000															
DATA															
CANIF2DA1, type R/W, offset 0x09C, reset 0x0000.0000															
DATA															
CANIF2DA2, type R/W, offset 0x0A0, reset 0x0000.0000															
DATA															
CANIF2DB1, type R/W, offset 0x0A4, reset 0x0000.0000															
DATA															
CANIF2DB2, type R/W, offset 0x0A8, reset 0x0000.0000															
DATA															
CANTXRQ1, type RO, offset 0x100, reset 0x0000.0000															
TXRQST															
CANTXRQ2, type RO, offset 0x104, reset 0x0000.0000															
TXRQST															
CANNWDA1, type RO, offset 0x120, reset 0x0000.0000															
NEWDAT															
CANNWDA2, type RO, offset 0x124, reset 0x0000.0000															
NEWDAT															
CANMSG1INT, type RO, offset 0x140, reset 0x0000.0000															
INTPND															
CANMSG2INT, type RO, offset 0x144, reset 0x0000.0000															
INTPND															
CANMSG1VAL, type RO, offset 0x160, reset 0x0000.0000															
MSGVAL															
CANMSG2VAL, type RO, offset 0x164, reset 0x0000.0000															
MSGVAL															
Ethernet Controller **Ethernet MAC** Base 0x4004.8000															
MACRIS/MACIACK, type RO, offset 0x000, reset 0x0000.0000 (Reads)															
									PHYINT	MDINT	RXER	FOV	TXEMP	TXER	RXINT
MACRIS/MACIACK, type WO, offset 0x000, reset 0x0000.0000 (Writes)															
									PHYINT	MDINT	RXER	FOV	TXEMP	TXER	RXINT
MACIM, type R/W, offset 0x004, reset 0x0000.007F															
									PHYINTM	MDINTM	RXERM	FOVM	TXEMPM	TXERM	RXINTM

31	30	29	28	27	26	25	24	23	22	21	20	19	18	17	16
15	14	13	12	11	10	9	8	7	6	5	4	3	2	1	0
MACRCTL, type R/W, offset 0x008, reset 0x0000.0008															
											RSTFIFO	BADCRC	PRMS	AMUL	RXEN
MACTCTL, type R/W, offset 0x00C, reset 0x0000.0000															
											DUPLEX		CRC	PADEN	TXEN
MACDATA, type RO, offset 0x010, reset 0x0000.0000 (Reads)															
RXDATA															
RXDATA															
MACDATA, type WO, offset 0x010, reset 0x0000.0000 (Writes)															
TXDATA															
TXDATA															
MACIA0, type R/W, offset 0x014, reset 0x0000.0000															
MACOCT4								MACOCT3							
MACOCT2								MACOCT1							
MACIA1, type R/W, offset 0x018, reset 0x0000.0000															
MACOCT6								MACOCT5							
MACTHR, type R/W, offset 0x01C, reset 0x0000.003F															
										THRESH					
MACMCTL, type R/W, offset 0x020, reset 0x0000.0000															
								REGADR						WRITE	START
MACMDV, type R/W, offset 0x024, reset 0x0000.0080															
								DIV							
MACMTXD, type R/W, offset 0x02C, reset 0x0000.0000															
MDTX															
MACMRXD, type R/W, offset 0x030, reset 0x0000.0000															
MDRX															
MACNP, type RO, offset 0x034, reset 0x0000.0000															
										NPR					
MACTR, type R/W, offset 0x038, reset 0x0000.0000															
															NEWTX
MACTS, type R/W, offset 0x03C, reset 0x0000.0000															
															TSEN
Ethernet Controller MII Management															
MR0, type R/W, address 0x00, reset 0x3100															
RESET	LOOPBK	SPEEDSL	ANEGEN	PWRDN	ISO	RANEG	DUPLEX	COLT							
MR1, type RO, address 0x01, reset 0x7849															
	100X_F	100X_H	10T_F	10T_H					MFPS	ANEGC	RFAULT	ANEGA	LINK	JAB	EXTD
MR2, type RO, address 0x02, reset 0x000E															
OUI[21:6]															
MR3, type RO, address 0x03, reset 0x7237															
OUI[5:0]						MN						RN			

31	30	29	28	27	26	25	24	23	22	21	20	19	18	17	16
15	14	13	12	11	10	9	8	7	6	5	4	3	2	1	0
MR4, type R/W, address 0x04, reset 0x01E1															
NP		RF					A3	A2	A1	A0	S				
MR5, type RO, address 0x05, reset 0x0000															
NP	ACK	RF	A[7:0]								S				
MR6, type RO, address 0x06, reset 0x0000															
											PDF	LPNPA		PRX	LPANEGA
MR16, type R/W, address 0x10, reset 0x0140															
RPTR	INPOL		TXHIM	SQEI	NL10					APOL	RVSPOL			PCSBP	RXCC
MR17, type R/W, address 0x11, reset 0x0000															
JABBER_IE	RXER_IE	PRX_IE	PDF_IE	LPACK_IE	LSCHG_IE	RFAULT_IE	ANEGCOMP_IE	JABBER_INT	RXER_INT	PRX_INT	PDF_INT	LPACK_INT	LSCHG_INT	RFAULT_INT	ANEGCOMP_INT
MR18, type RO, address 0x12, reset 0x0000															
			ANEGF	DPLX	RATE	RXSD	RX_LOCK								
MR19, type R/W, address 0x13, reset 0x4000															
TXO															
MR23, type R/W, address 0x17, reset 0x0010															
								LED1[3:0]				LED0[3:0]			
MR24, type R/W, address 0x18, reset 0x00C0															
								PD_MODE	AUTO_SW	MDIX	MDIX_CM	MDIX_SD			
Analog Comparator Base 0x4003.C000															
ACMIS, type R/W1C, offset 0x000, reset 0x0000.0000															
															IN0
ACRIS, type RO, offset 0x004, reset 0x0000.0000															
															IN0
ACINTEN, type R/W, offset 0x008, reset 0x0000.0000															
															IN0
ACREFCTL, type R/W, offset 0x010, reset 0x0000.0000															
						EN	RNG					VREF			
ACSTAT0, type RO, offset 0x020, reset 0x0000.0000															
														OVAL	
ACCTL0, type R/W, offset 0x024, reset 0x0000.0000															
				TOEN	ASRCP			TSLVAL	TSEN		ISLVAL	ISEN		CINV	
Pulse Width Modulator (PWM) Base 0x4002.8000															
PWMCTL, type R/W, offset 0x000, reset 0x0000.0000															
													GlobalSync2	GlobalSync1	GlobalSync0
PWMSYNC, type R/W, offset 0x004, reset 0x0000.0000															
													Sync2	Sync1	Sync0
PWMENABLE, type R/W, offset 0x008, reset 0x0000.0000															
										PWM5En	PWM4En	PWM3En	PWM2En	PWM1En	PWM0En
PWMINVERT, type R/W, offset 0x00C, reset 0x0000.0000															
										PWM5Inv	PWM4Inv	PWM3Inv	PWM2Inv	PWM1Inv	PWM0Inv

31	30	29	28	27	26	25	24	23	22	21	20	19	18	17	16
15	14	13	12	11	10	9	8	7	6	5	4	3	2	1	0
PWMFAULT, type R/W, offset 0x010, reset 0x0000.0000															
										Fault5	Fault4	Fault3	Fault2	Fault1	Fault0
PWMINTEN, type R/W, offset 0x014, reset 0x0000.0000															
															IntFault
													IntPWM2	IntPWM1	IntPWM0
PWMRIS, type RO, offset 0x018, reset 0x0000.0000															
															IntFault
													IntPWM2	IntPWM1	IntPWM0
PWMISC, type R/W1C, offset 0x01C, reset 0x0000.0000															
															IntFault
													IntPWM2	IntPWM1	IntPWM0
PWMSTATUS, type RO, offset 0x020, reset 0x0000.0000															
															Fault
PWM0CTL, type R/W, offset 0x040, reset 0x0000.0000															
										CmpBUpd	CmpAUpd	LoadUpd	Debug	Mode	Enable
PWM1CTL, type R/W, offset 0x080, reset 0x0000.0000															
										CmpBUpd	CmpAUpd	LoadUpd	Debug	Mode	Enable
PWM2CTL, type R/W, offset 0x0C0, reset 0x0000.0000															
										CmpBUpd	CmpAUpd	LoadUpd	Debug	Mode	Enable
PWM0INTEN, type R/W, offset 0x044, reset 0x0000.0000															
		TrCmpBD	TrCmpBU	TrCmpAD	TrCmpAU	TrCntLoad	TrCntZero			IntCmpBD	IntCmpBU	IntCmpAD	IntCmpAU	IntCntLoad	IntCntZero
PWM1INTEN, type R/W, offset 0x084, reset 0x0000.0000															
		TrCmpBD	TrCmpBU	TrCmpAD	TrCmpAU	TrCntLoad	TrCntZero			IntCmpBD	IntCmpBU	IntCmpAD	IntCmpAU	IntCntLoad	IntCntZero
PWM2INTEN, type R/W, offset 0x0C4, reset 0x0000.0000															
		TrCmpBD	TrCmpBU	TrCmpAD	TrCmpAU	TrCntLoad	TrCntZero			IntCmpBD	IntCmpBU	IntCmpAD	IntCmpAU	IntCntLoad	IntCntZero
PWM0RIS, type RO, offset 0x048, reset 0x0000.0000															
										IntCmpBD	IntCmpBU	IntCmpAD	IntCmpAU	IntCntLoad	IntCntZero
PWM1RIS, type RO, offset 0x088, reset 0x0000.0000															
										IntCmpBD	IntCmpBU	IntCmpAD	IntCmpAU	IntCntLoad	IntCntZero
PWM2RIS, type RO, offset 0x0C8, reset 0x0000.0000															
										IntCmpBD	IntCmpBU	IntCmpAD	IntCmpAU	IntCntLoad	IntCntZero
PWM0ISC, type R/W1C, offset 0x04C, reset 0x0000.0000															
										IntCmpBD	IntCmpBU	IntCmpAD	IntCmpAU	IntCntLoad	IntCntZero
PWM1ISC, type R/W1C, offset 0x08C, reset 0x0000.0000															
										IntCmpBD	IntCmpBU	IntCmpAD	IntCmpAU	IntCntLoad	IntCntZero
PWM2ISC, type R/W1C, offset 0x0CC, reset 0x0000.0000															
										IntCmpBD	IntCmpBU	IntCmpAD	IntCmpAU	IntCntLoad	IntCntZero

31	30	29	28	27	26	25	24	23	22	21	20	19	18	17	16
15	14	13	12	11	10	9	8	7	6	5	4	3	2	1	0
PWM0LOAD, type R/W, offset 0x050, reset 0x0000.0000															
Load															
PWM1LOAD, type R/W, offset 0x090, reset 0x0000.0000															
Load															
PWM2LOAD, type R/W, offset 0x0D0, reset 0x0000.0000															
Load															
PWM0COUNT, type RO, offset 0x054, reset 0x0000.0000															
Count															
PWM1COUNT, type RO, offset 0x094, reset 0x0000.0000															
Count															
PWM2COUNT, type RO, offset 0x0D4, reset 0x0000.0000															
Count															
PWM0CMPA, type R/W, offset 0x058, reset 0x0000.0000															
CompA															
PWM1CMPA, type R/W, offset 0x098, reset 0x0000.0000															
CompA															
PWM2CMPA, type R/W, offset 0x0D8, reset 0x0000.0000															
CompA															
PWM0CMPB, type R/W, offset 0x05C, reset 0x0000.0000															
CompB															
PWM1CMPB, type R/W, offset 0x09C, reset 0x0000.0000															
CompB															
PWM2CMPB, type R/W, offset 0x0DC, reset 0x0000.0000															
CompB															
PWM0GENA, type R/W, offset 0x060, reset 0x0000.0000															
				ActCmpBD		ActCmpBU		ActCmpAD		ActCmpAU		ActLoad		ActZero	
PWM1GENA, type R/W, offset 0x0A0, reset 0x0000.0000															
				ActCmpBD		ActCmpBU		ActCmpAD		ActCmpAU		ActLoad		ActZero	
PWM2GENA, type R/W, offset 0x0E0, reset 0x0000.0000															
				ActCmpBD		ActCmpBU		ActCmpAD		ActCmpAU		ActLoad		ActZero	
PWM0GENB, type R/W, offset 0x064, reset 0x0000.0000															
				ActCmpBD		ActCmpBU		ActCmpAD		ActCmpAU		ActLoad		ActZero	
PWM1GENB, type R/W, offset 0x0A4, reset 0x0000.0000															
				ActCmpBD		ActCmpBU		ActCmpAD		ActCmpAU		ActLoad		ActZero	

31	30	29	28	27	26	25	24	23	22	21	20	19	18	17	16
15	14	13	12	11	10	9	8	7	6	5	4	3	2	1	0
PWM2GENB, type R/W, offset 0x0E4, reset 0x0000.0000															
				ActCmpBD		ActCmpBU		ActCmpAD		ActCmpAU		ActLoad		ActZero	
PWM0DBCTL, type R/W, offset 0x068, reset 0x0000.0000															
															Enable
PWM1DBCTL, type R/W, offset 0x0A8, reset 0x0000.0000															
															Enable
PWM2DBCTL, type R/W, offset 0x0E8, reset 0x0000.0000															
															Enable
PWM0DBRISE, type R/W, offset 0x06C, reset 0x0000.0000															
				RiseDelay											
PWM1DBRISE, type R/W, offset 0x0AC, reset 0x0000.0000															
				RiseDelay											
PWM2DBRISE, type R/W, offset 0x0EC, reset 0x0000.0000															
				RiseDelay											
PWM0DBFALL, type R/W, offset 0x070, reset 0x0000.0000															
				FallDelay											
PWM1DBFALL, type R/W, offset 0x0B0, reset 0x0000.0000															
				FallDelay											
PWM2DBFALL, type R/W, offset 0x0F0, reset 0x0000.0000															
				FallDelay											
Quadrature Encoder Interface (QEI) QEI0 base: 0x4002.C000 QEI1 base: 0x4002.D000															
QEICTL, type R/W, offset 0x000, reset 0x0000.0000															
			STALLEN	INVI	INVB	INVA	VelDiv			VelEn	ResMode	CapMode	SigMode	Swap	Enable
QEISTAT, type RO, offset 0x004, reset 0x0000.0000															
														Direction	Error
QEIPOS, type R/W, offset 0x008, reset 0x0000.0000															
Position															
Position															
QEIMAXPOS, type R/W, offset 0x00C, reset 0x0000.0000															
MaxPos															
MaxPos															
QEILOAD, type R/W, offset 0x010, reset 0x0000.0000															
Load															
Load															
QEITIME, type RO, offset 0x014, reset 0x0000.0000															
Time															
Time															

31	30	29	28	27	26	25	24	23	22	21	20	19	18	17	16
15	14	13	12	11	10	9	8	7	6	5	4	3	2	1	0
QEICOUNT, type RO, offset 0x018, reset 0x0000.0000															
Count															
Count															
QEISPEED, type RO, offset 0x01C, reset 0x0000.0000															
Speed															
Speed															
QEIINTEN, type R/W, offset 0x020, reset 0x0000.0000															
												IntError	IntDir	IntTimer	IntIndex
QEIRIS, type RO, offset 0x024, reset 0x0000.0000															
												IntError	IntDir	IntTimer	IntIndex
QEIISC, type R/W1C, offset 0x028, reset 0x0000.0000															
												IntError	IntDir	IntTimer	IntIndex

C Ordering and Contact Information

C.1 Ordering Information

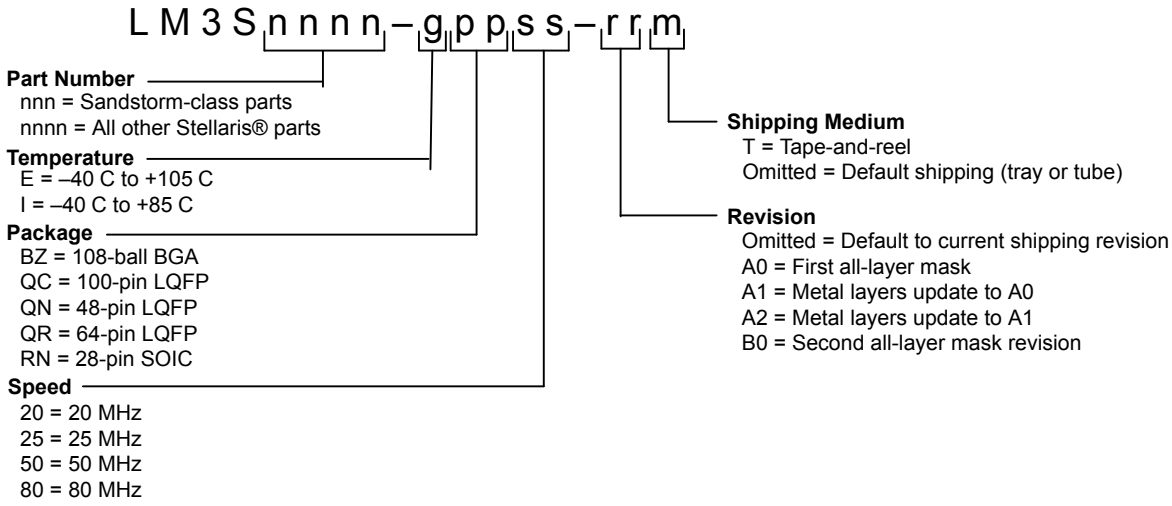

Table C-1. Part Ordering Information

Orderable Part Number	Description
LM3S8962-IBZ50	Stellaris® LM3S8962 Microcontroller
LM3S8962-IBZ50 (T)	Stellaris® LM3S8962 Microcontroller
LM3S8962-EQC50	Stellaris® LM3S8962 Microcontroller
LM3S8962-EQC50 (T)	Stellaris® LM3S8962 Microcontroller
LM3S8962-IQC50	Stellaris® LM3S8962 Microcontroller
LM3S8962-IQC50 (T)	Stellaris® LM3S8962 Microcontroller

C.2 Kits

The Luminary Micro Stellaris® Family provides the hardware and software tools that engineers need to begin development quickly.

- Reference Design Kits accelerate product development by providing ready-to-run hardware, and comprehensive documentation including hardware design files:

  http://www.luminarymicro.com/products/reference_design_kits/

- Evaluation Kits provide a low-cost and effective means of evaluating Stellaris® microcontrollers before purchase:

  http://www.luminarymicro.com/products/kits.html

- Development Kits provide you with all the tools you need to develop and prototype embedded applications right out of the box:

  http://www.luminarymicro.com/products/development_kits.html

See the Luminary Micro website for the latest tools available, or ask your Luminary Micro distributor.

C.3 Company Information

Luminary Micro, Inc. designs, markets, and sells ARM Cortex-M3-based microcontrollers (MCUs). Austin, Texas-based Luminary Micro is the lead partner for the Cortex-M3 processor, delivering the world's first silicon implementation of the Cortex-M3 processor. Luminary Micro's introduction of the Stellaris® family of products provides 32-bit performance for the same price as current 8- and 16-bit microcontroller designs. With entry-level pricing at $1.00 for an ARM technology-based MCU, Luminary Micro's Stellaris product line allows for standardization that eliminates future architectural upgrades or software tool changes.

Luminary Micro, Inc.
108 Wild Basin, Suite 350
Austin, TX 78746
Main: +1-512-279-8800
Fax: +1-512-279-8879
http://www.luminarymicro.com
sales@luminarymicro.com

C.4 Support Information

For support on Luminary Micro products, contact:

support@luminarymicro.com +1-512-279-8800, ext. 3