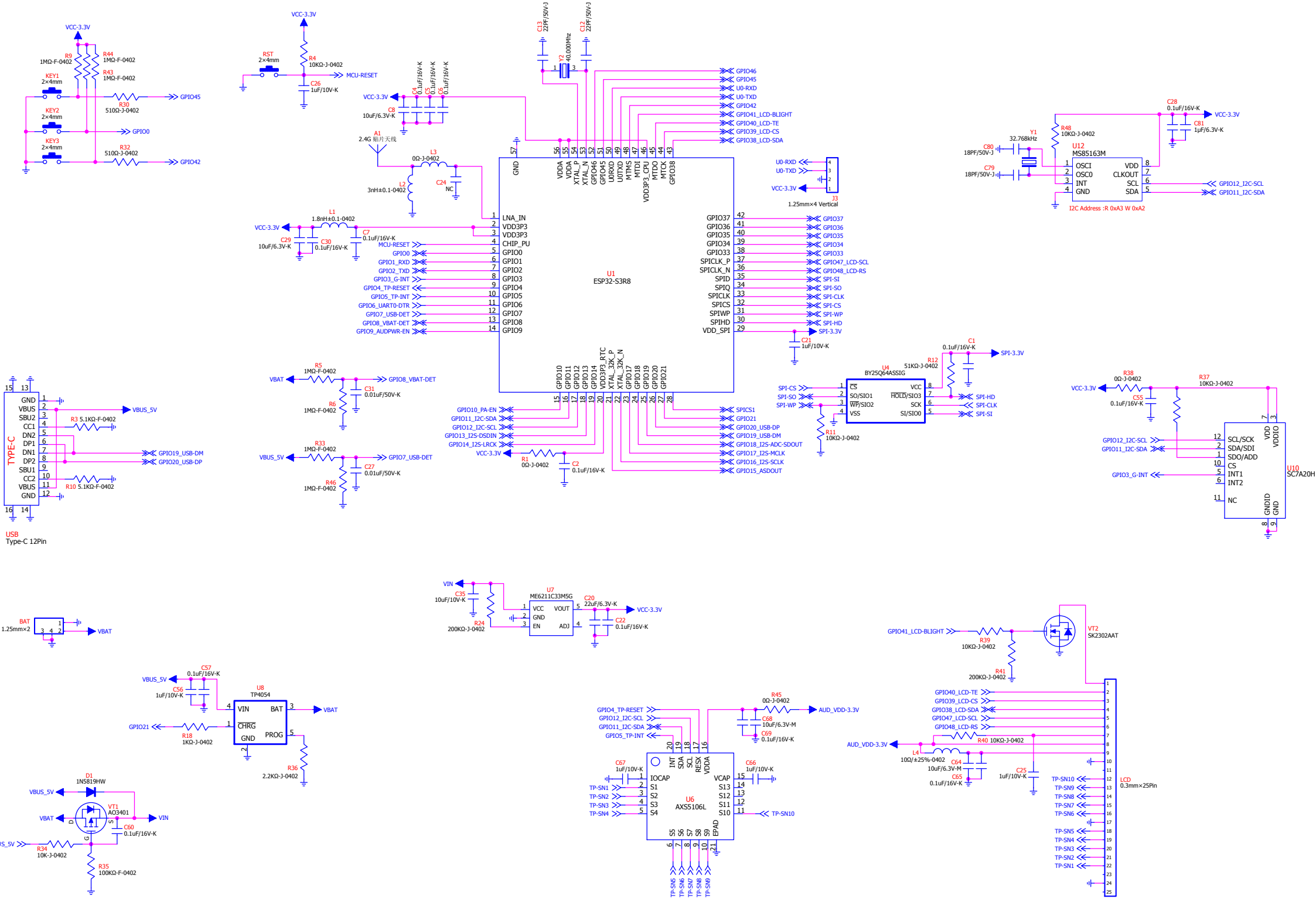
VCC-3.3V
R9 1MΩ-F-0402
R44 1MΩ-F-0402
R43 1MΩ-F-0402
KEY1 2×4mm
KEY2 2×4mm
KEY3 2×4mm
R30 510Ω-J-0402
R32 510Ω-J-0402
GPIO45
GPIO0
GPIO42
RST 2×4mm
R4 10KΩ-J-0402
MCU-RESET
C26 1uF/10V-K
C4 0.1uF/16V-K
C5 0.1uF/16V-K
C6 0.1uF/16V-K
C8 10uF/6.3V-K
A1 2.4G 贴片天线
L3 0Ω-J-0402
L2 3nH±0.1-0402
C24 NC
C13 22PF/50V-J
C12 22PF/50V-J
Y2 40.000Mhz
U1 ESP32-S3R8
GND
VDDA
XTAL_P
XTAL_N
GPIO46
GPIO45
U0-RXD
U0-TXD
GPIO42
GPIO41_LCD-BLIGHT
GPIO40_LCD-TE
GPIO39_LCD-CS
GPIO38_LCD-SDA
LNA_IN
VDD3P3
CHIP_PU
GPIO0
GPIO1
GPIO2
GPIO3
GPIO4
GPIO5
GPIO6
GPIO7
GPIO8
GPIO9
L1 1.8nH±0.1-0402
C29 10uF/6.3V-K
C30 0.1uF/16V-K
C7 0.1uF/16V-K
GPIO1_RXD
GPIO2_TXD
GPIO3_G-INT
GPIO4_TP-RESET
GPIO5_TP-INT
GPIO6_UART0-DTR
GPIO7_USB-DET
GPIO8_VBAT-DET
GPIO9_AUDPWR-EN
GPIO37
GPIO36
GPIO35
GPIO34
GPIO33
SPICLK_P
SPICLK_N
SPID
SPIQ
SPICLK
SPICS
SPIWP
SPIHD
VDD_SPI
GPIO47_LCD-SCL
GPIO48_LCD-RS
SPI-SI
SPI-SO
SPI-CLK
SPI-CS
SPI-WP
SPI-HD
SPI-3.3V
C21 1uF/10V-K
J3 1.25mm×4 Vertical
C28 0.1uF/16V-K
C81 1uF/6.3V-K
R48 10KΩ-J-0402
Y1 32.768kHz
C80 18PF/50V-J
C79 18PF/50V-J
U12 MS85163M
OSCI
OSC0
INT
GND
VDD
CLKOUT
SCL
SDA
GPIO12_I2C-SCL
GPIO11_I2C-SDA
I2C Address :R 0xA3 W 0xA2
R5 1MΩ-F-0402
R6 1MΩ-F-0402
C31 0.01uF/50V-K
VBAT
GPIO8_VBAT-DET
R33 1MΩ-F-0402
R46 1MΩ-F-0402
C27 0.01uF/50V-K
VBUS_5V
GPIO7_USB-DET
TYPE-C
GND
VBUS
SBU2
CC1
DN2
DP1
DN1
DP2
SBU1
CC2
VBUS
GND
R3 5.1KΩ-F-0402
R10 5.1KΩ-F-0402
GPIO19_USB-DM
GPIO20_USB-DP
USB
Type-C 12Pin
GPIO10_PA-EN
GPIO11_I2C-SDA
GPIO12_I2C-SCL
GPIO13_I2S-DSDIN
GPIO14_I2S-LRCK
VCC-3.3V
R1 0Ω-J-0402
C2 0.1uF/16V-K
SPICS1
GPIO21
GPIO20_USB-DP
GPIO19_USB-DM
GPIO18_I2S-ADC-SDOUT
GPIO17_I2S-MCLK
GPIO16_I2S-SCLK
GPIO15_ASDOUT
U4 BY25Q64ASSIG
CS
SO/SIO1
WP/SIO2
VSS
VCC
HOLD/SIO3
SCK
SI/SIO0
R12 51KΩ-J-0402
C1 0.1uF/16V-K
R11 10KΩ-J-0402
R38 0Ω-J-0402
R37 10KΩ-J-0402
C55 0.1uF/16V-K
U10 SC7A20H
SCL/SCK
SDA/SDI
SDO/ADD
CS
INT1
INT2
NC
VDD
VDDIO
GND
BAT 1.25mm×2
VIN
C35 10uF/10V-K
R24 200KΩ-J-0402
U7 ME6211C33M5G
VCC
GND
EN
VOUT
ADJ
C20 22uF/6.3V-K
C22 0.1uF/16V-K
C57 0.1uF/16V-K
C56 1uF/10V-K
U8 TP4054
VIN
CHRG
GND
BAT
PROG
R18 1KΩ-J-0402
R36 2.2KΩ-J-0402
D1 1N5819HW
VT1 AO3401
C60 0.1uF/16V-K
R34 10K-J-0402
R35 100KΩ-F-0402
GPIO4_TP-RESET
GPIO12_I2C-SCL
GPIO11_I2C-SDA
GPIO5_TP-INT
R45 0Ω-J-0402
AUD_VDD-3.3V
C68 10uF/6.3V-M
C69 0.1uF/16V-K
C67 1uF/10V-K
C66 1uF/10V-K
U6 AXS5106L
IOCAP
INT
SDA
SCL
RESX
VDDA
VCAP
S1
S2
S3
S4
S5
S6
S7
S8
S9
S10
S11
S12
S13
EPAD
TP-SN1
TP-SN2
TP-SN3
TP-SN4
TP-SN5
TP-SN6
TP-SN7
TP-SN8
TP-SN9
TP-SN10
GPIO41_LCD-BLIGHT
R39 10KΩ-J-0402
R41 200KΩ-J-0402
VT2 SK2302AAT
GPIO40_LCD-TE
GPIO39_LCD-CS
GPIO38_LCD-SDA
GPIO47_LCD-SCL
GPIO48_LCD-RS
R40 10KΩ-J-0402
L4 10Ω/±25%-0402
C64 10uF/6.3V-M
C65 0.1uF/16V-K
C25 1uF/10V-K
LCD 0.3mm×25Pin

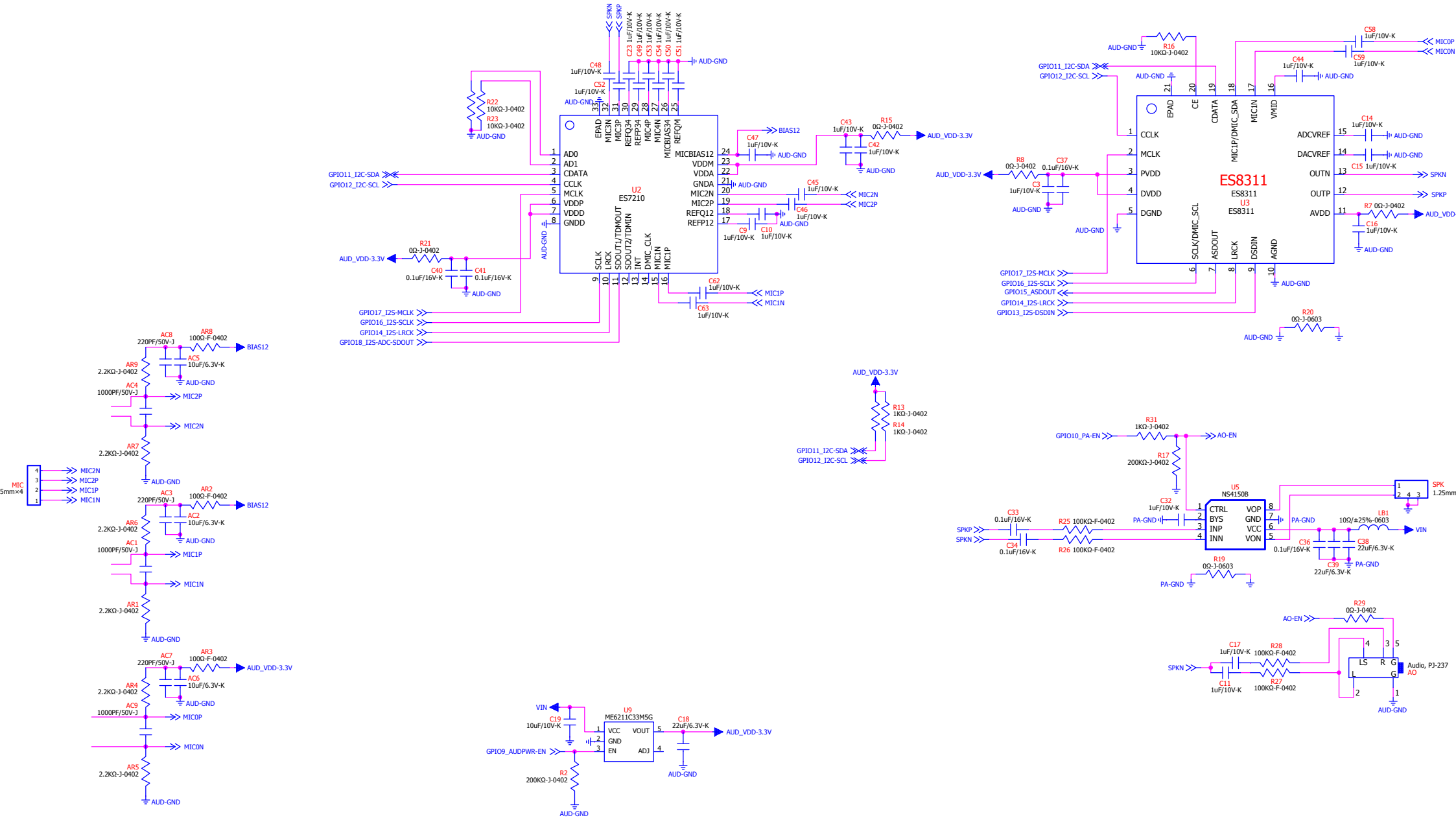
U2
ES7210
U3
ES8311
ES8311
U5
NS4150B
U9
ME6211C33M5G
AUD-GND
AUD_VDD-3.3V
BIAS12
VIN
PA-GND
GPIO11_I2C-SDA
GPIO12_I2C-SCL
GPIO17_I2S-MCLK
GPIO16_I2S-SCLK
GPIO15_ASDOUT
GPIO14_I2S-LRCK
GPIO13_I2S-DSDIN
GPIO18_I2S-ADC-SDOUT
GPIO10_PA-EN
GPIO9_AUDPWR-EN
MIC1P
MIC1N
MIC2P
MIC2N
MIC0P
MIC0N
SPKP
SPKN
AO-EN
Audio, PJ-237

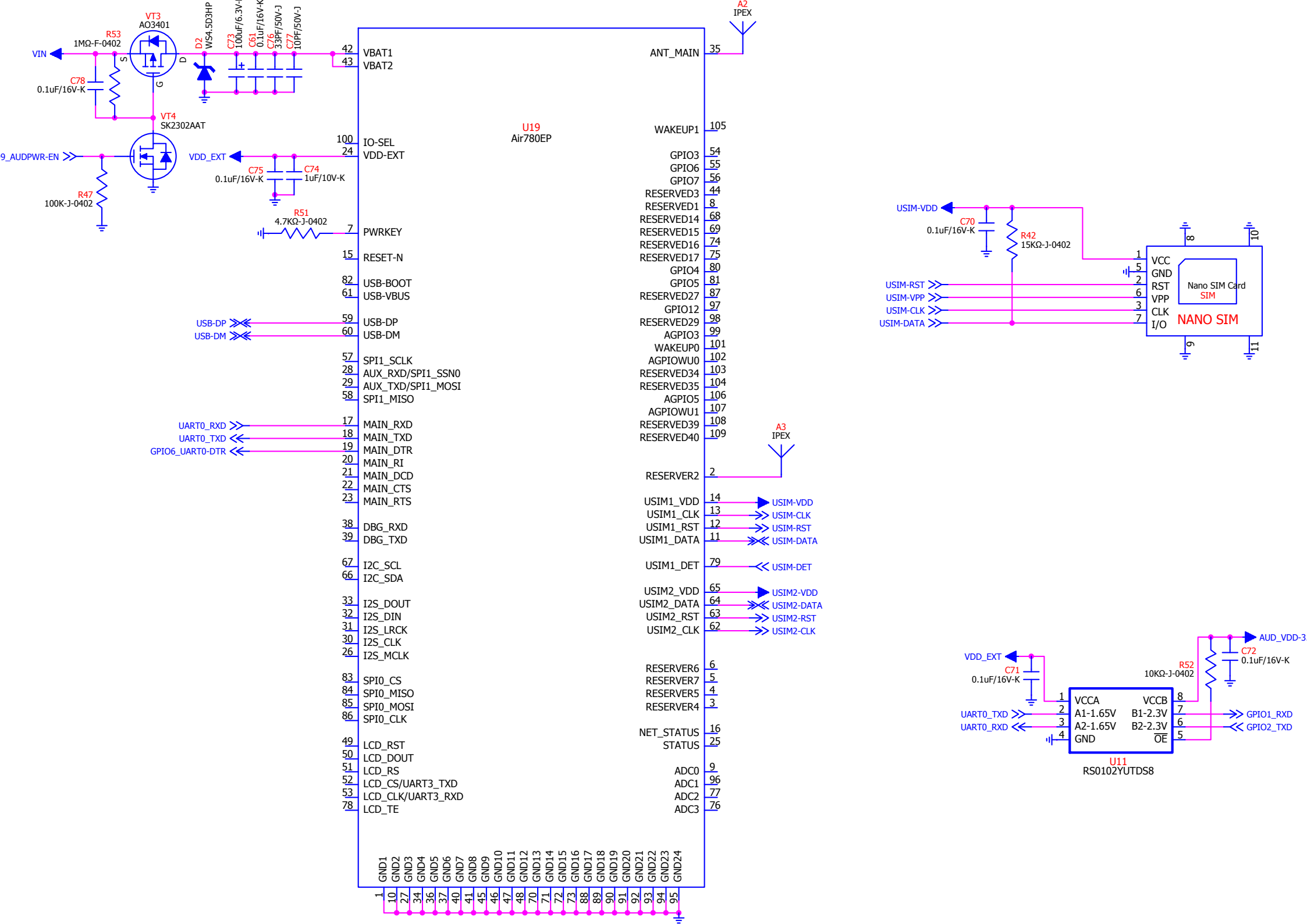
U19
Air780EP
VT3
AO3401
R53
1MΩ-F-0402
VIN
C78
0.1uF/16V-K
VT4
SK2302AAT
9_AUDPWR-EN
R47
100K-J-0402
D2
WS4.5D3HP
C73
100uF/6.3V-K
C61
0.1uF/16V-K
C76
33PF/50V-J
C77
10PF/50V-J
VDD_EXT
C75
0.1uF/16V-K
C74
1uF/10V-K
R51
4.7KΩ-J-0402
A2
IPEX
A3
IPEX
VBAT1
VBAT2
IO-SEL
VDD-EXT
PWRKEY
RESET-N
USB-BOOT
USB-VBUS
USB-DP
USB-DM
SPI1_SCLK
AUX_RXD/SPI1_SSN0
AUX_TXD/SPI1_MOSI
SPI1_MISO
UART0_RXD
UART0_TXD
GPIO6_UART0-DTR
MAIN_RXD
MAIN_TXD
MAIN_DTR
MAIN_RI
MAIN_DCD
MAIN_CTS
MAIN_RTS
DBG_RXD
DBG_TXD
I2C_SCL
I2C_SDA
I2S_DOUT
I2S_DIN
I2S_LRCK
I2S_CLK
I2S_MCLK
SPI0_CS
SPI0_MISO
SPI0_MOSI
SPI0_CLK
LCD_RST
LCD_DOUT
LCD_RS
LCD_CS/UART3_TXD
LCD_CLK/UART3_RXD
LCD_TE
ANT_MAIN
WAKEUP1
GPIO3
GPIO6
GPIO7
RESERVED3
RESERVED1
RESERVED14
RESERVED15
RESERVED16
RESERVED17
GPIO4
GPIO5
RESERVED27
GPIO12
RESERVED29
AGPIO3
WAKEUP0
AGPIOWU0
RESERVED34
RESERVED35
AGPIO5
AGPIOWU1
RESERVED39
RESERVED40
RESERVER2
USIM1_VDD
USIM1_CLK
USIM1_RST
USIM1_DATA
USIM1_DET
USIM2_VDD
USIM2_DATA
USIM2_RST
USIM2_CLK
RESERVER6
RESERVER7
RESERVER5
RESERVER4
NET_STATUS
STATUS
ADC0
ADC1
ADC2
ADC3
USIM-VDD
USIM-CLK
USIM-RST
USIM-DATA
USIM-DET
USIM2-VDD
USIM2-DATA
USIM2-RST
USIM2-CLK
GND1 GND2 GND3 GND4 GND5 GND6 GND7 GND8 GND9 GND10 GND11 GND12 GND13 GND14 GND15 GND16 GND17 GND18 GND19 GND20 GND21 GND22 GND23 GND24
C70
0.1uF/16V-K
R42
15KΩ-J-0402
VCC
GND
RST
VPP
CLK
I/O
Nano SIM Card
SIM
NANO SIM
VDD_EXT
C71
0.1uF/16V-K
UART0_TXD
UART0_RXD
VCCA
A1-1.65V
A2-1.65V
GND
VCCB
B1-2.3V
B2-2.3V
OE
U11
RS0102YUTDS8
R52
10KΩ-J-0402
C72
0.1uF/16V-K
AUD_VDD-3.
GPIO1_RXD
GPIO2_TXD