HMC

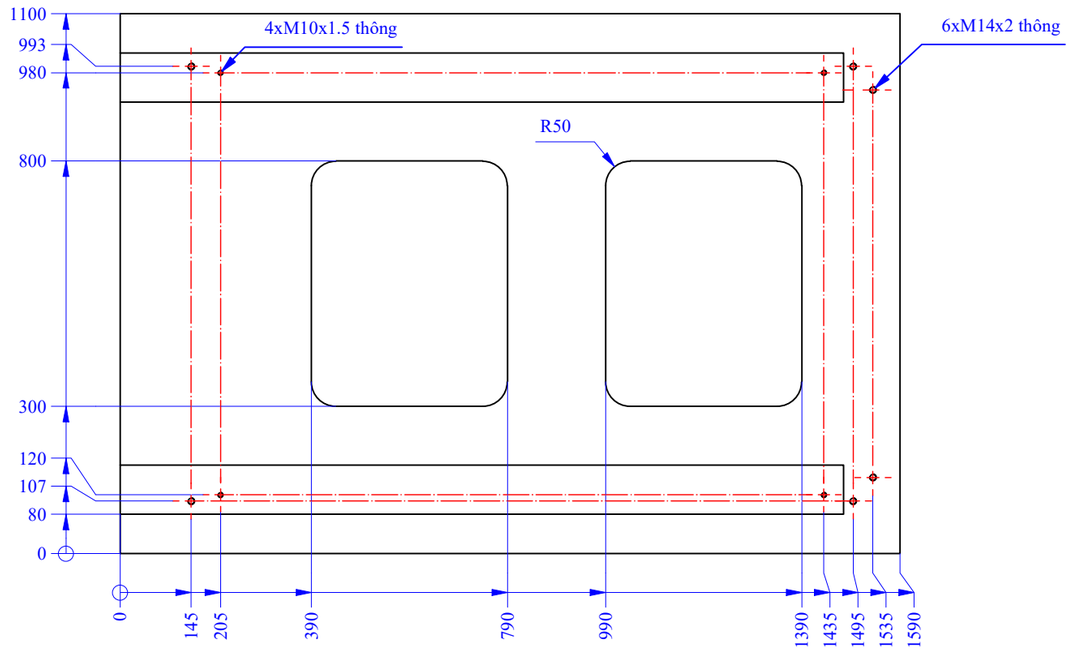

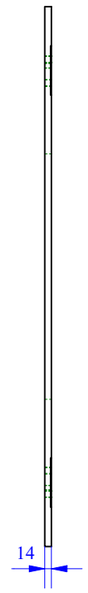

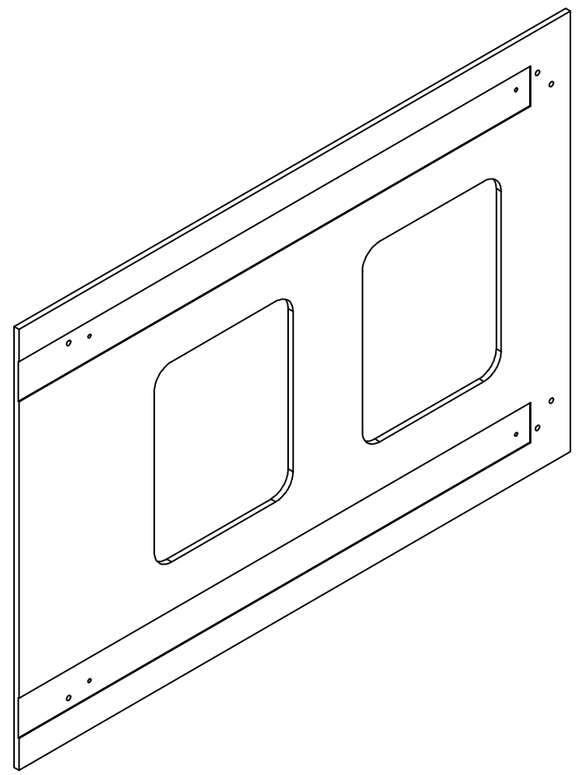

GHI CHÚ:
1. ĐỘ NHÁM BỀ MẶT ĐẠT Ra3.2
2. LÀM SẠCH BAVIA CẠNH SẮC (C0.3).

DMP Your trust, our mission				DMP MACHINERY					
					Rev.No	Content of Revision		Date	Rev.By
Design By	Design By	Check By	Approve By	Project Name			Material	Mass	Quantity
N.T.Hiếu	N.T.Hiếu	N.H.Xuân	N.H.Xuân	Project Number			CT3	N/A	01
				Part Name			Scale	Unit	Projection method
				Part Number	DMPD.M1108.01.01.21		0.08	mm / inch	
7/18/2024	7/18/2024			Machining	GCCX				