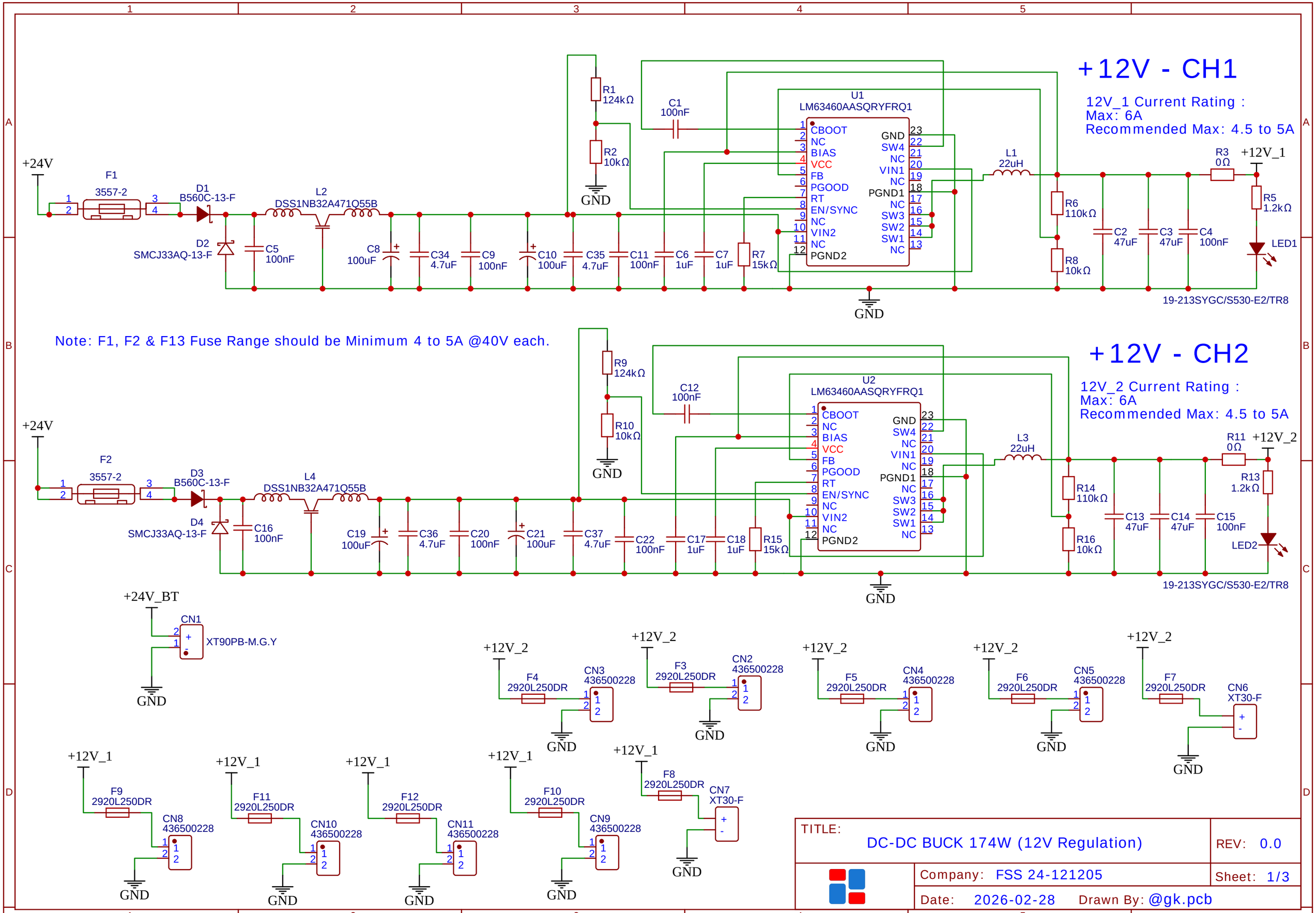

TITLE: DC-DC BUCK 174W (12V Regulation)	REV: 0.0
Company: FSS 24-121205	Sheet: 1/3
Date: 2026-02-28 Drawn By: @gk.pcb	

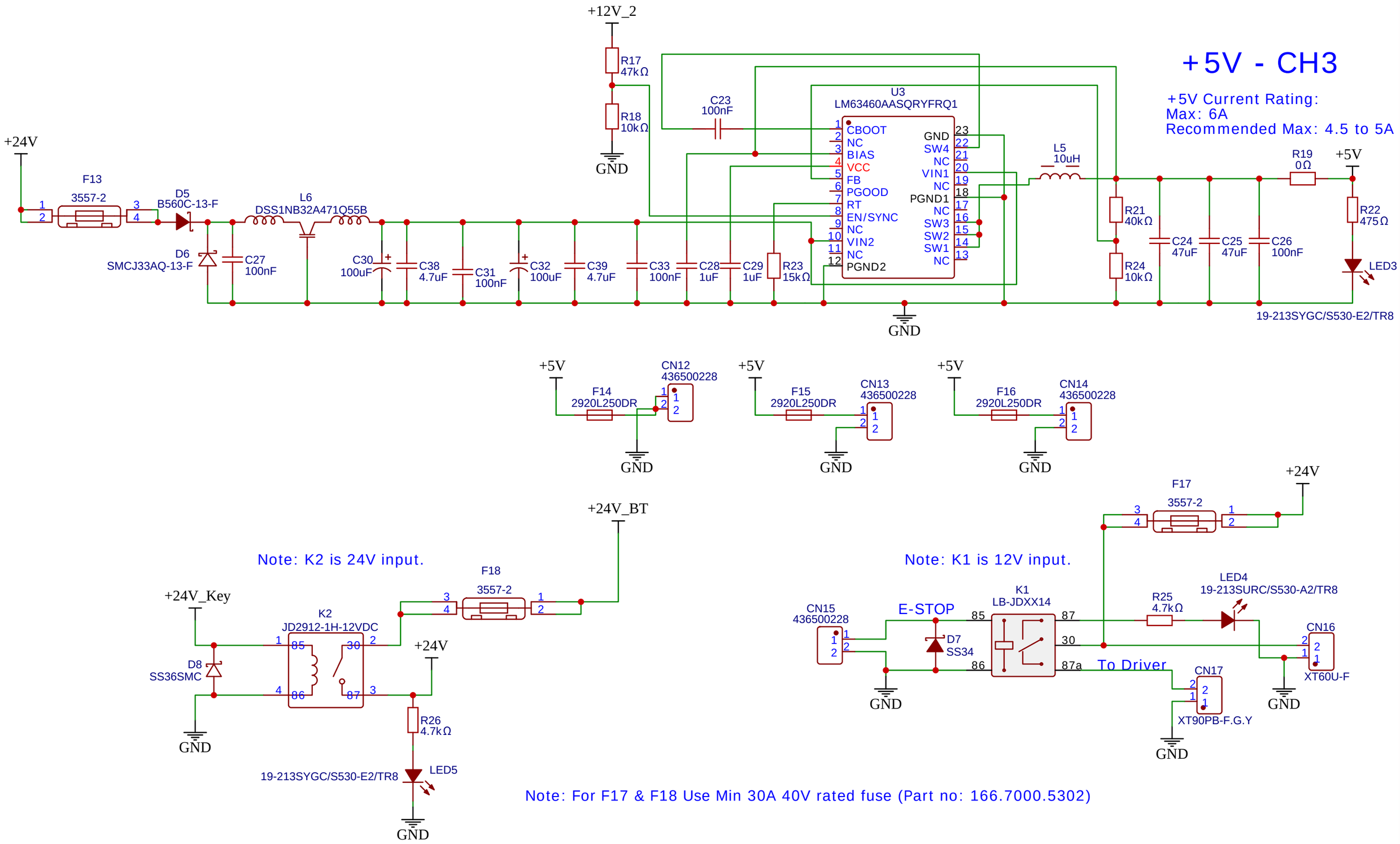

TITLE: DC-DC BUCK 174W (5V Reg & Relay control)	REV: 0.0
Company: FSS 24-121205	Sheet: 2/3
Date: 2026-02-28 Drawn By: @gk.pcb	

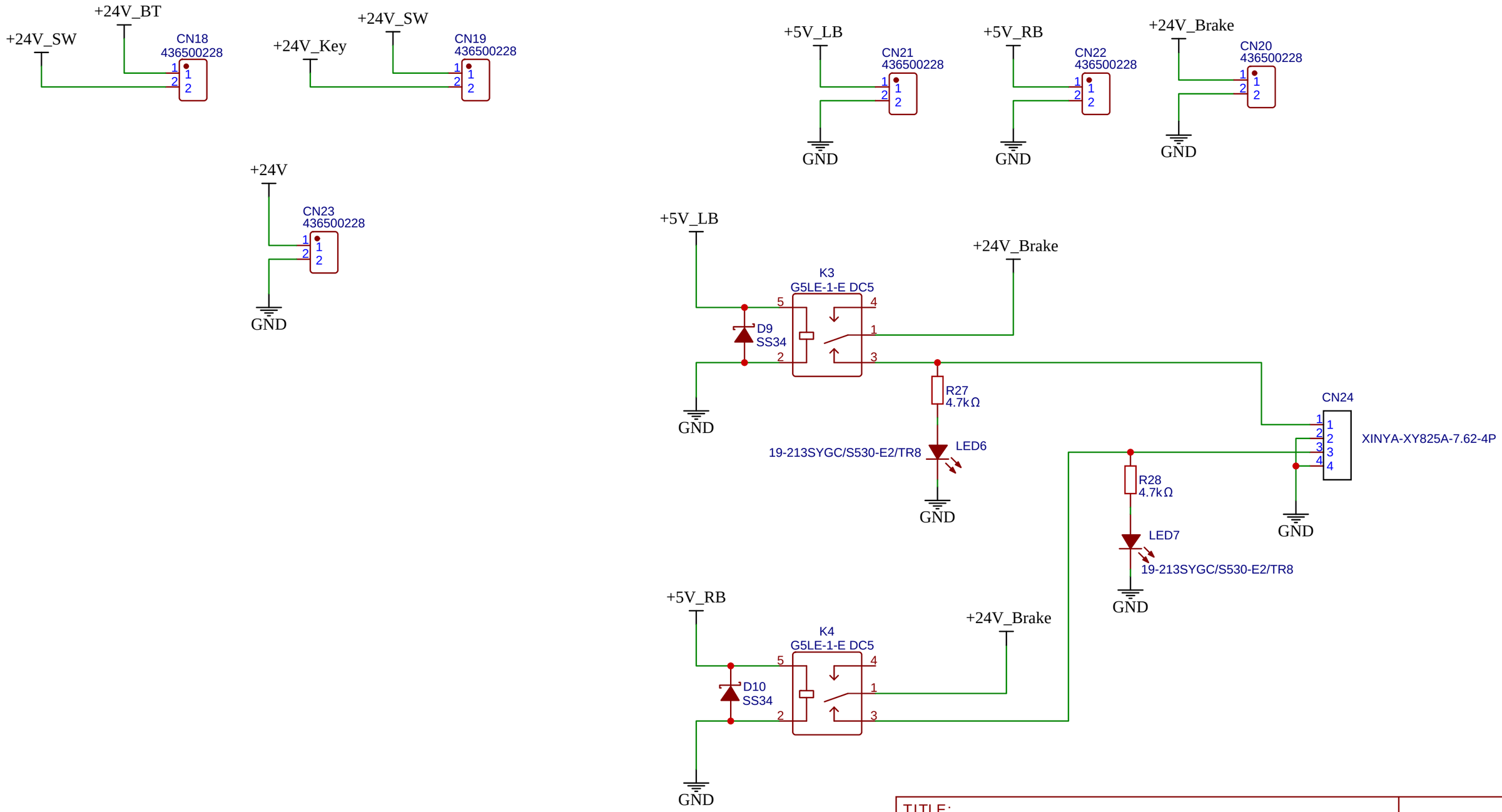

TITLE: DC-DC BUCK 174W (5V Brake Relay control)

REV: 0.0

Company: FSS 24-121205

Sheet: 3/3

Date: 2026-02-28

Drawn By: gk.pcb